Reobrix

NO.33017

V12

ENGINE

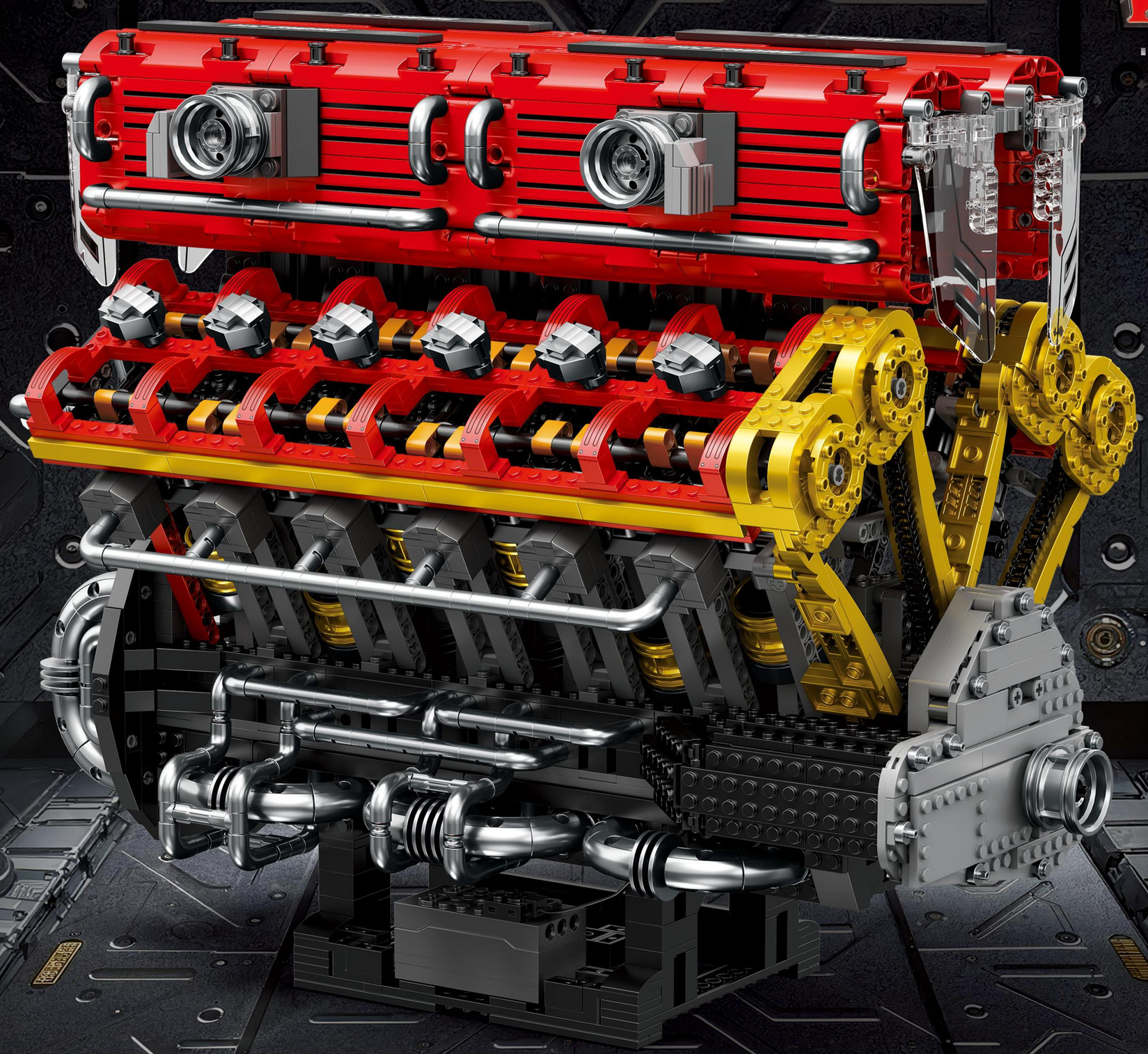

POWER BATTERY

1

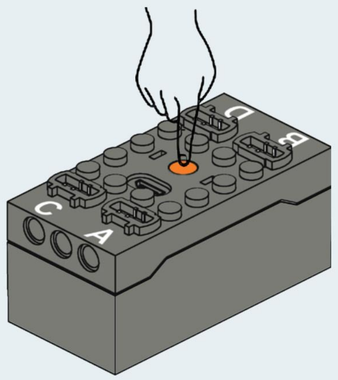

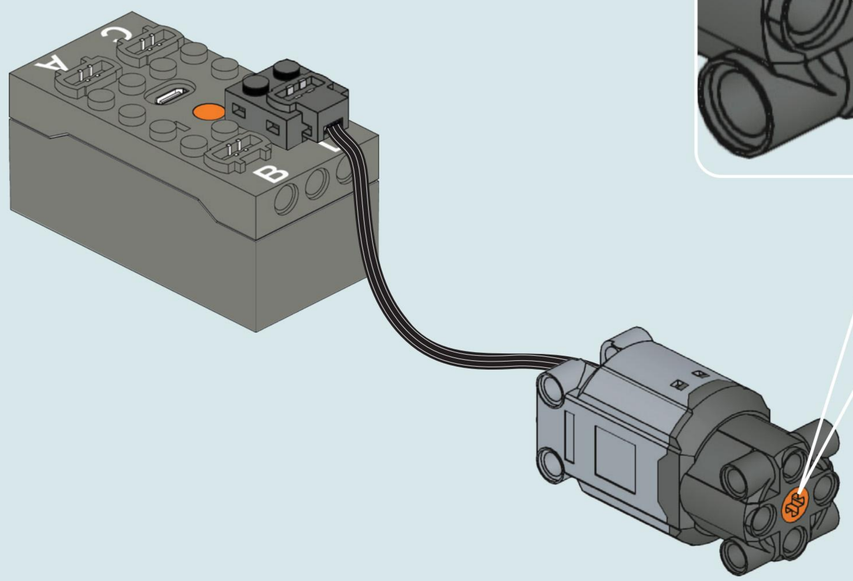

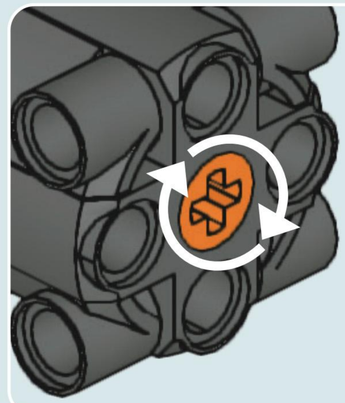

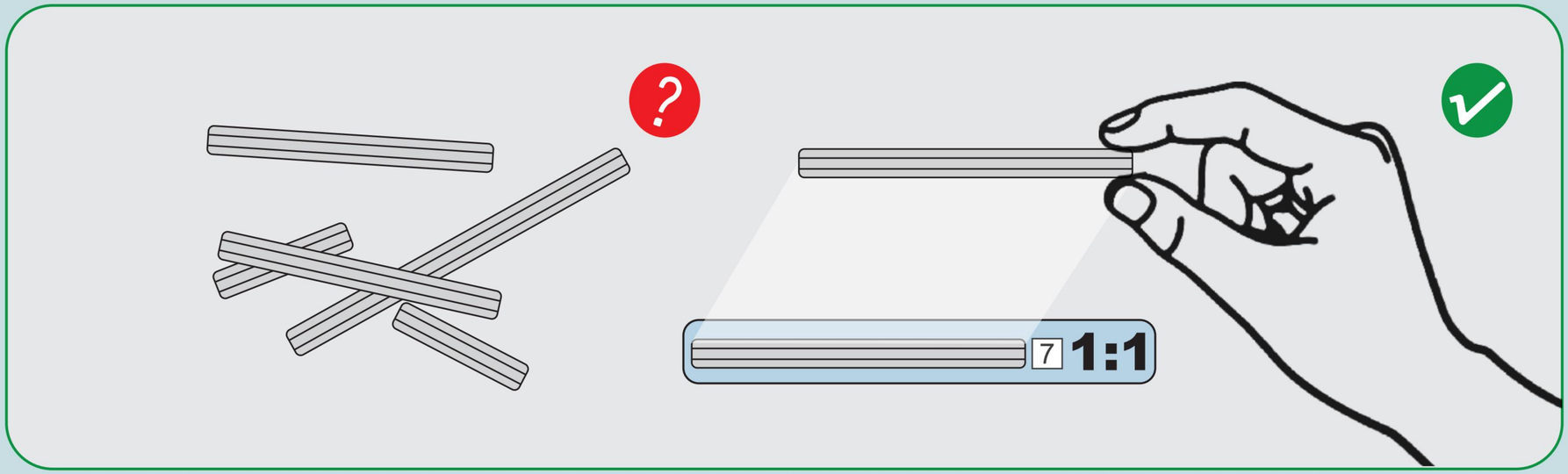
?
7
1:1

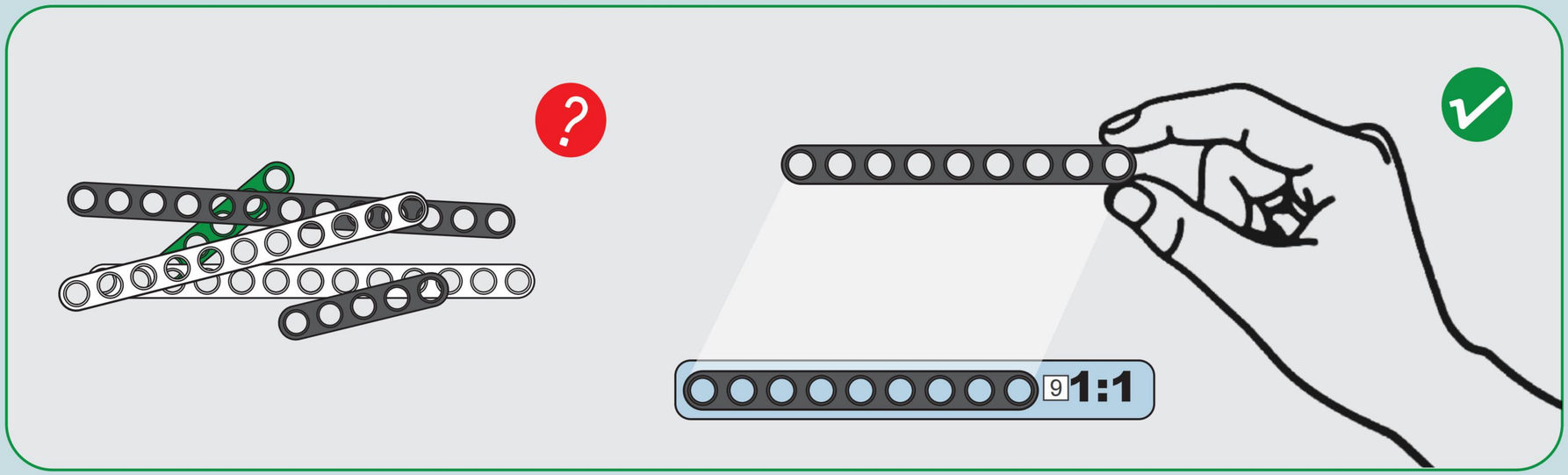
?
9
1:1



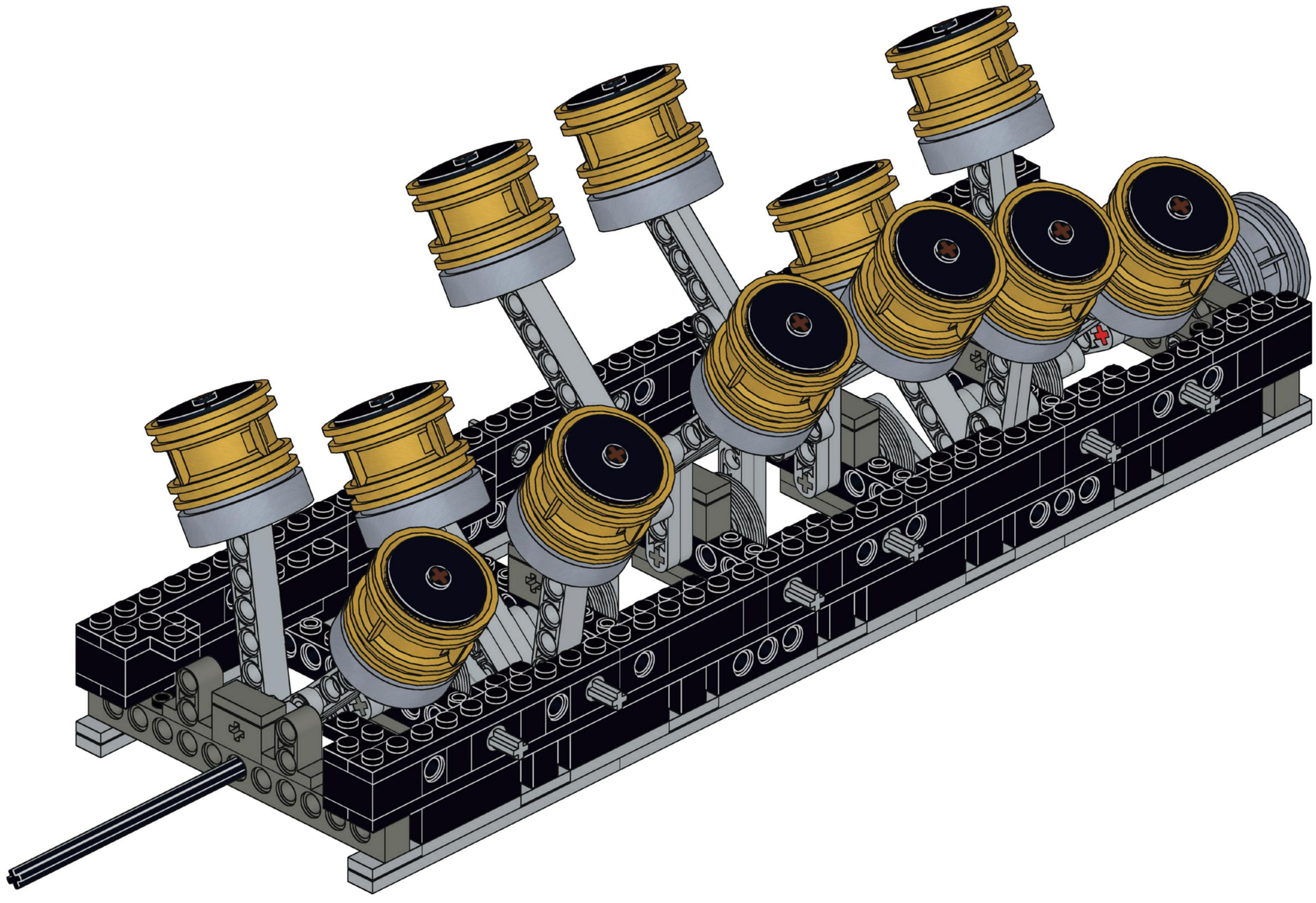

A

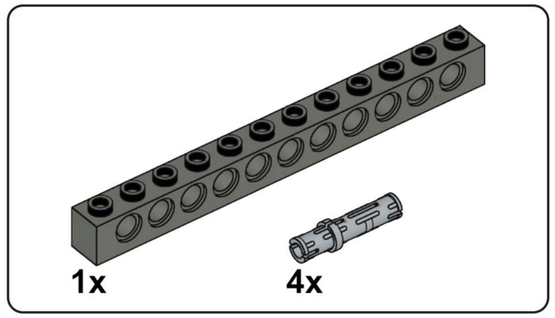

A1

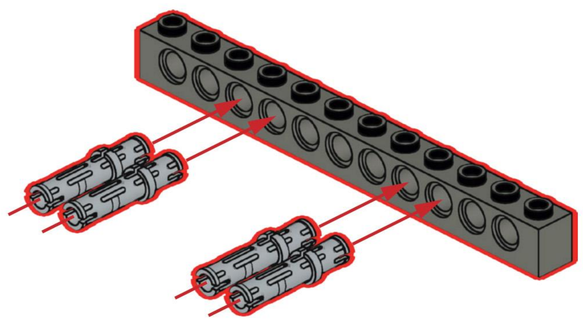

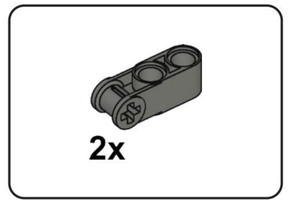

A2

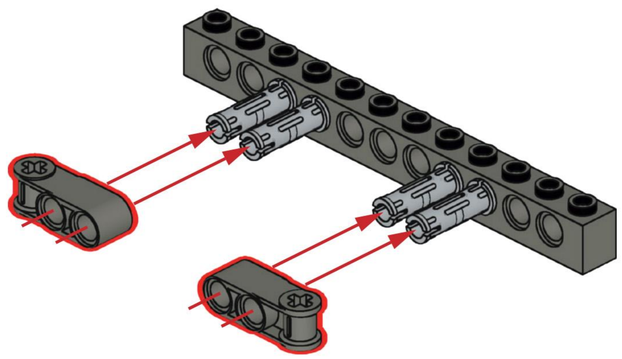

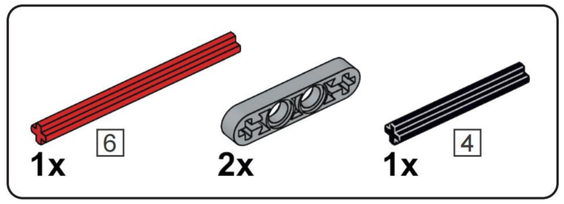

A3

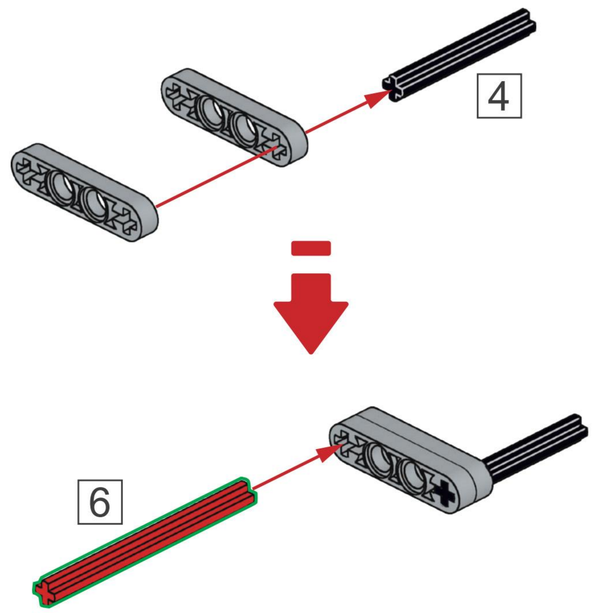

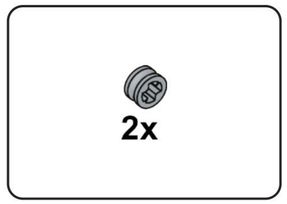

A4

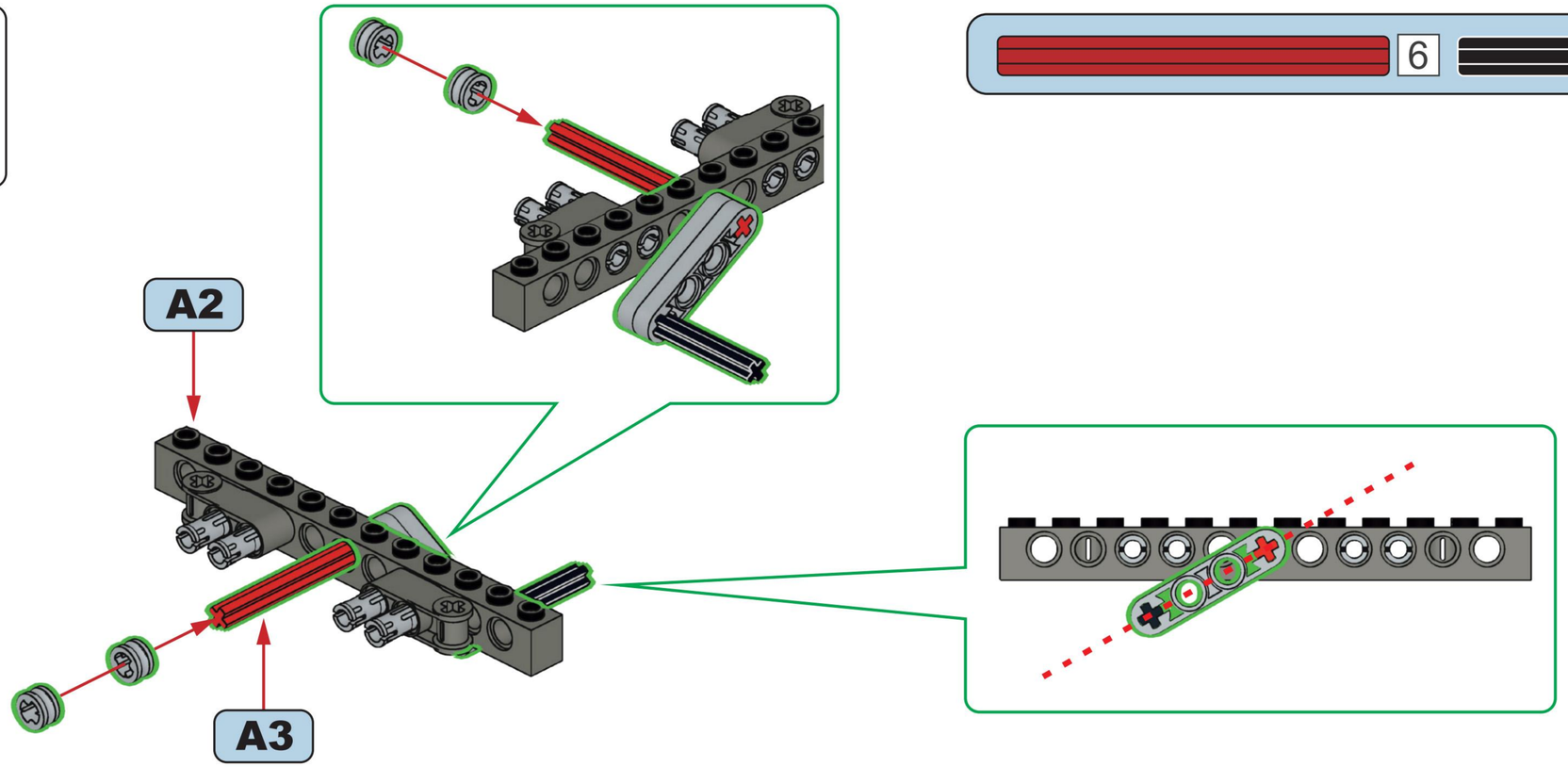

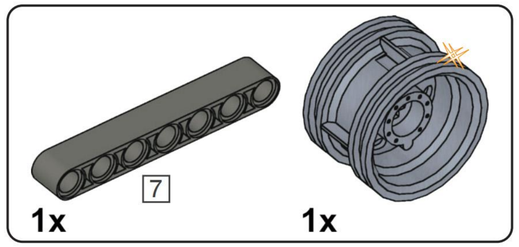

A5

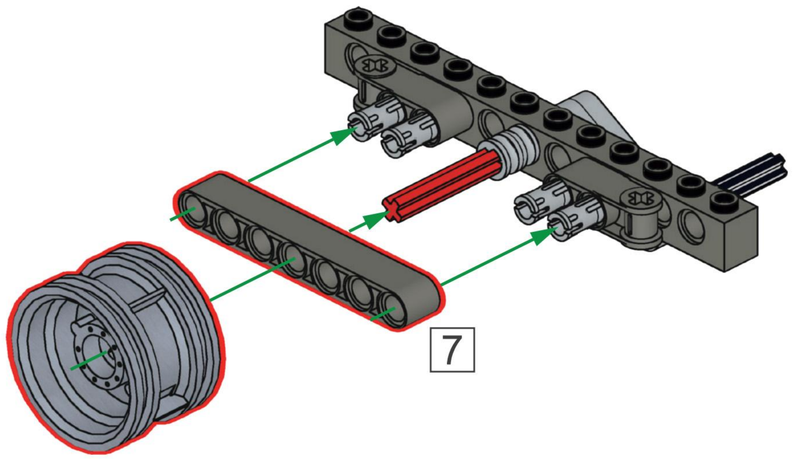

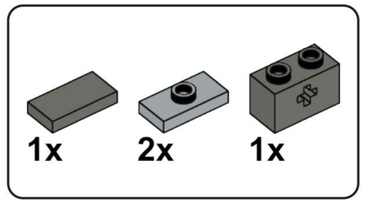

A6

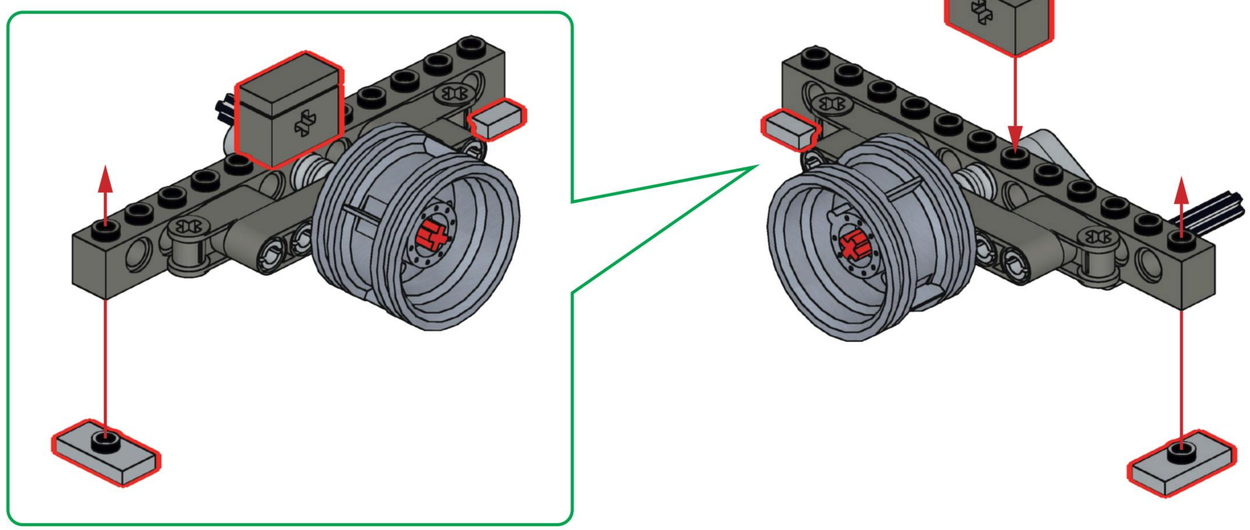

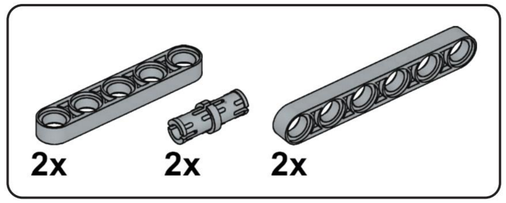

A7

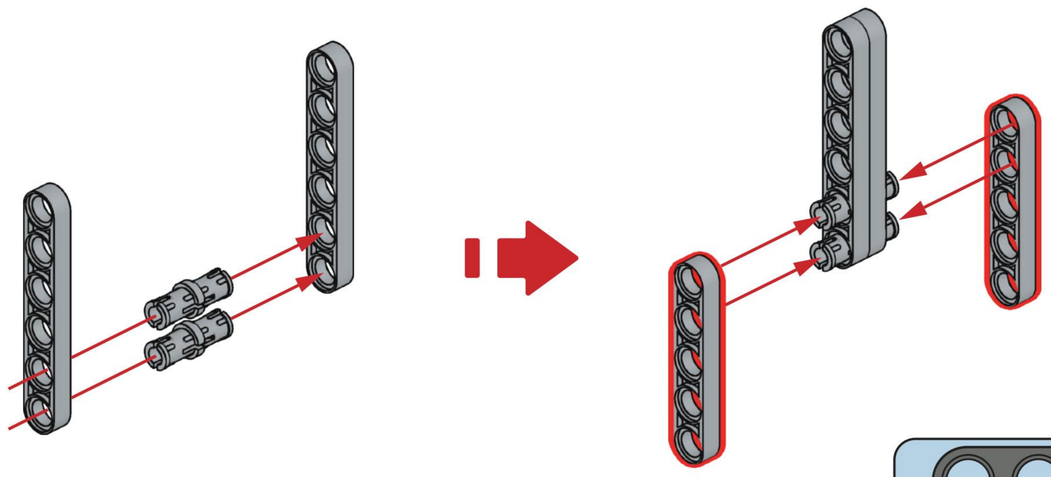

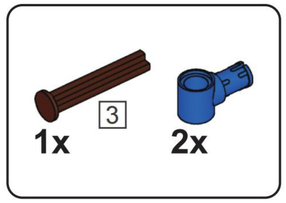

A8

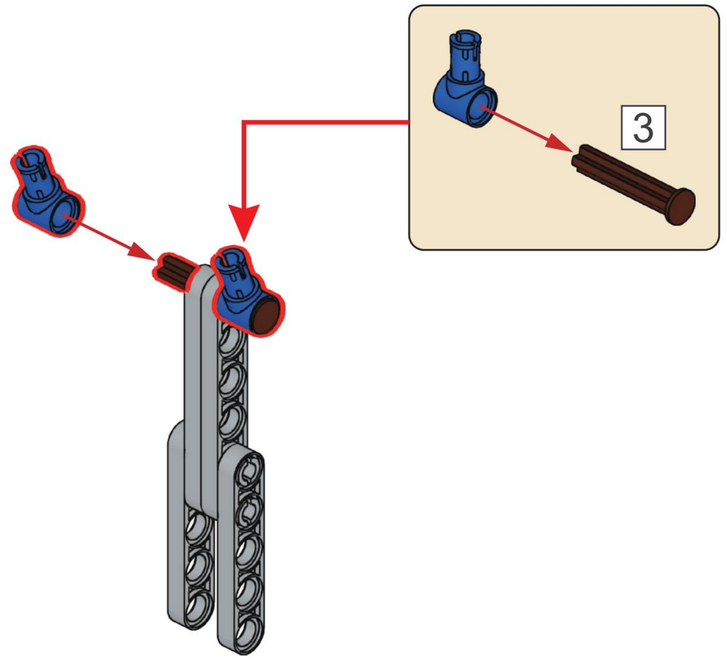

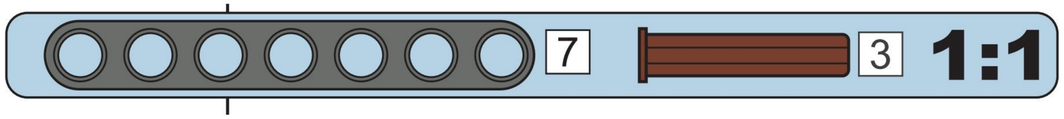

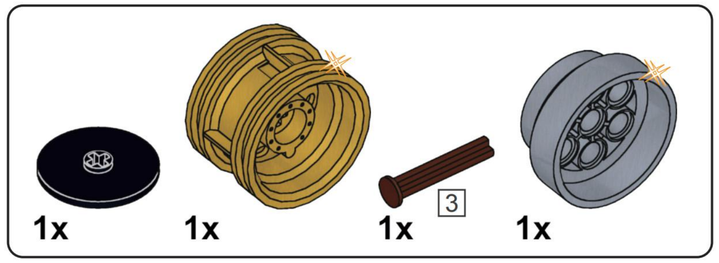

A9

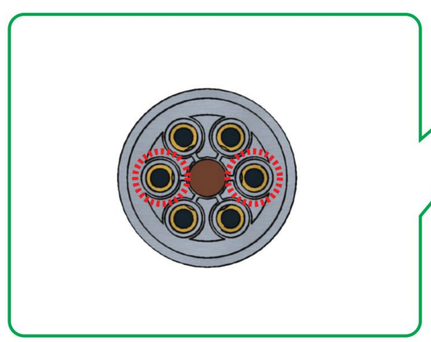

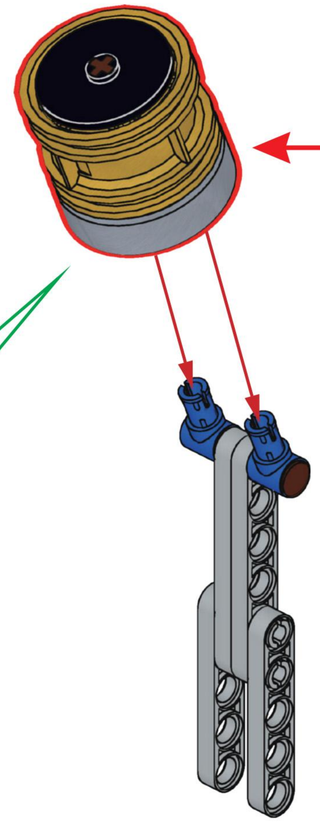

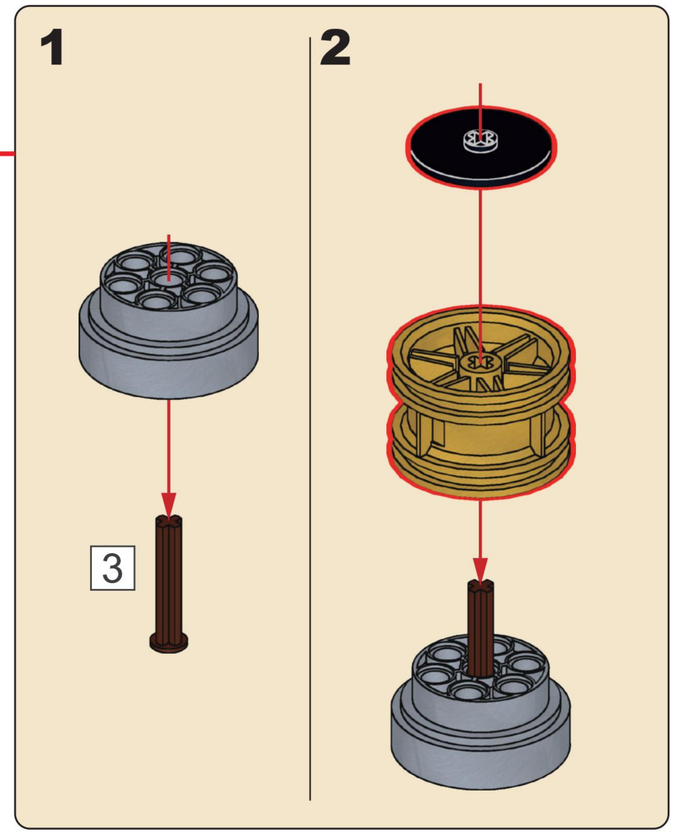

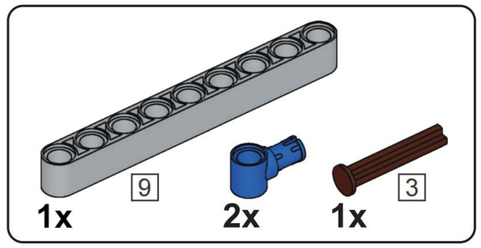

A10

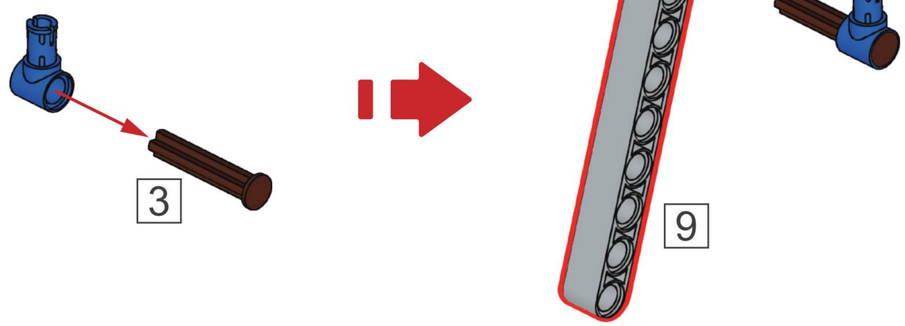

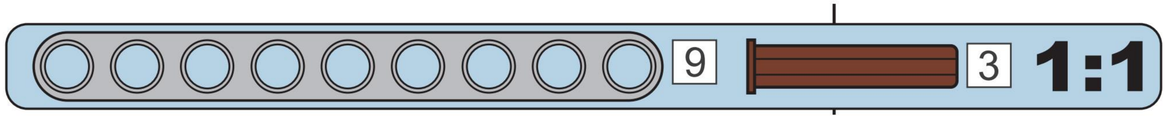

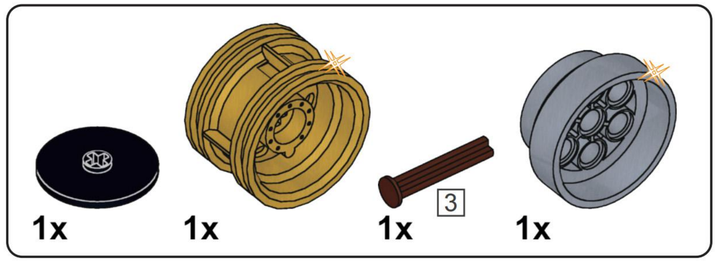

A11

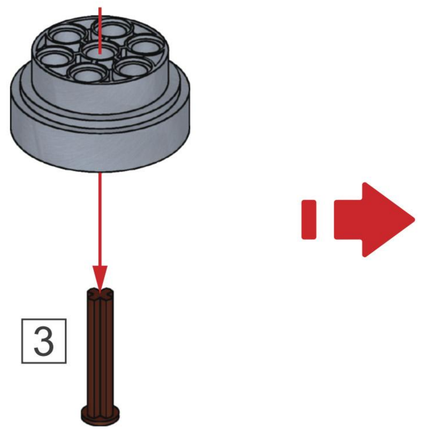

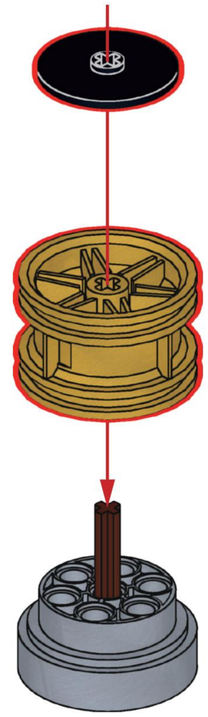

A12

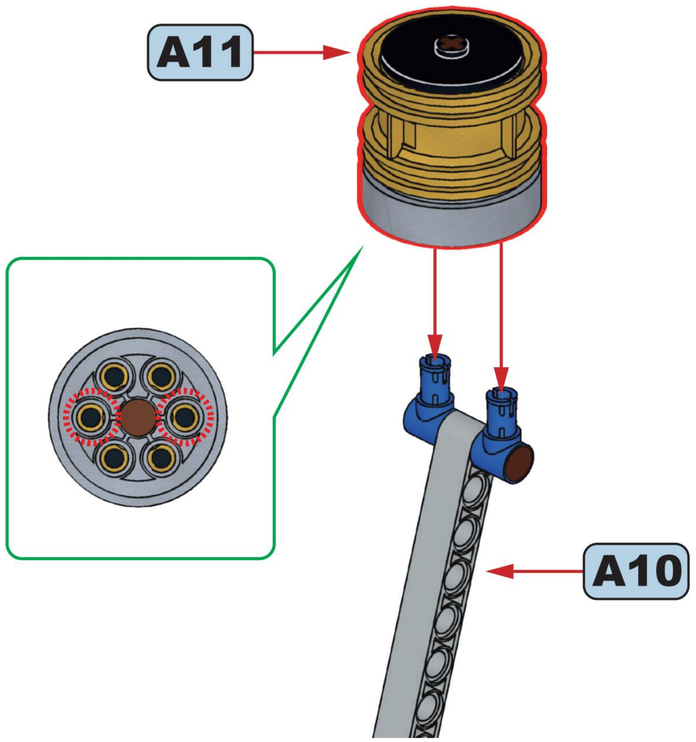

A13

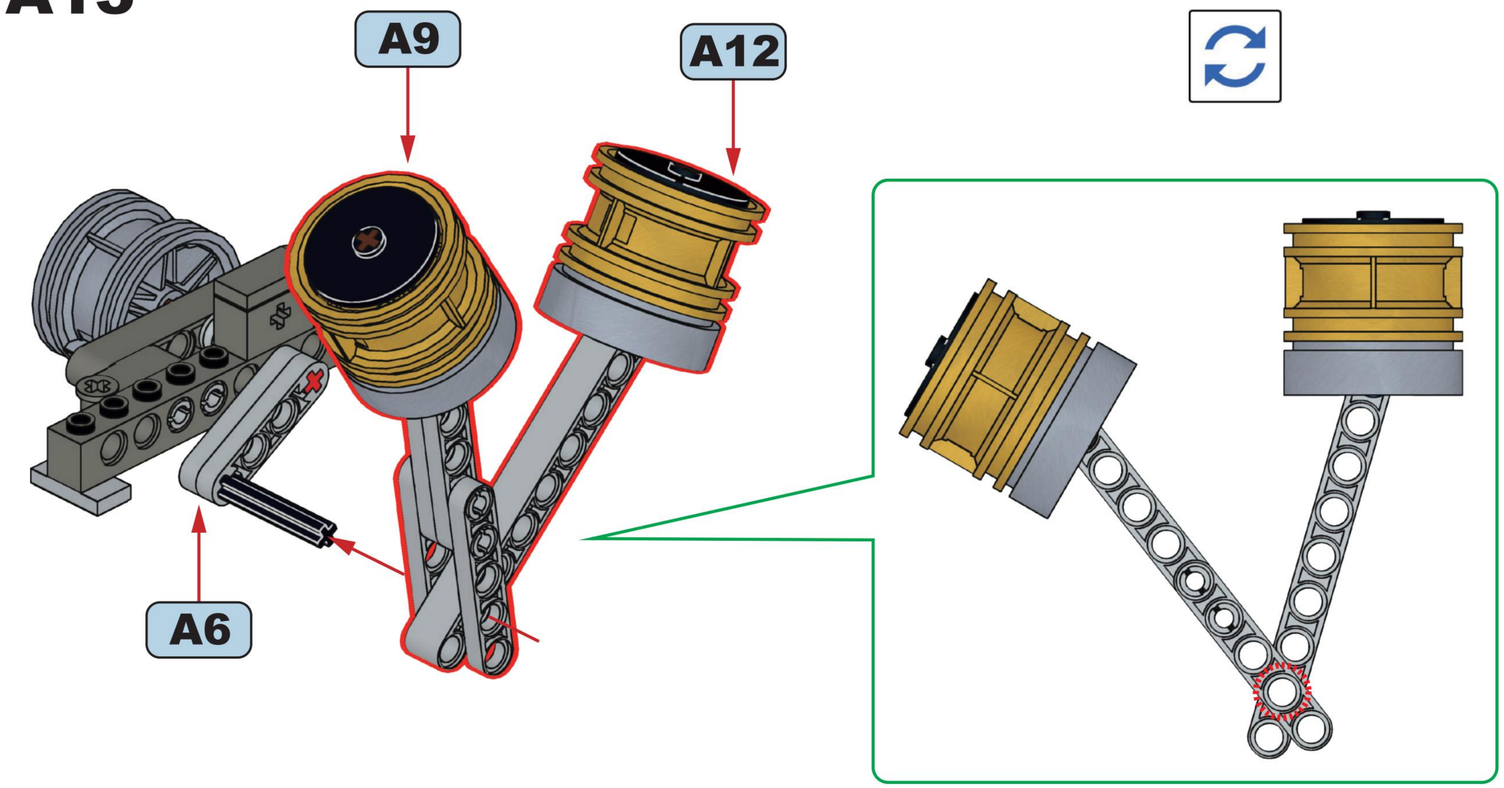

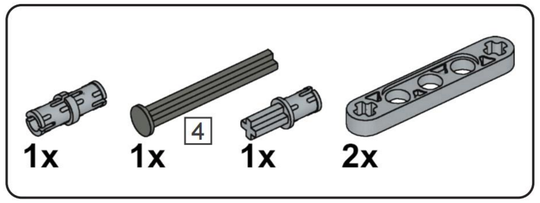

A14

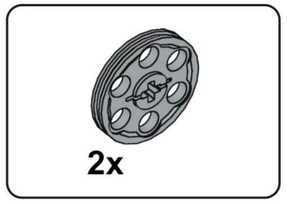

A15

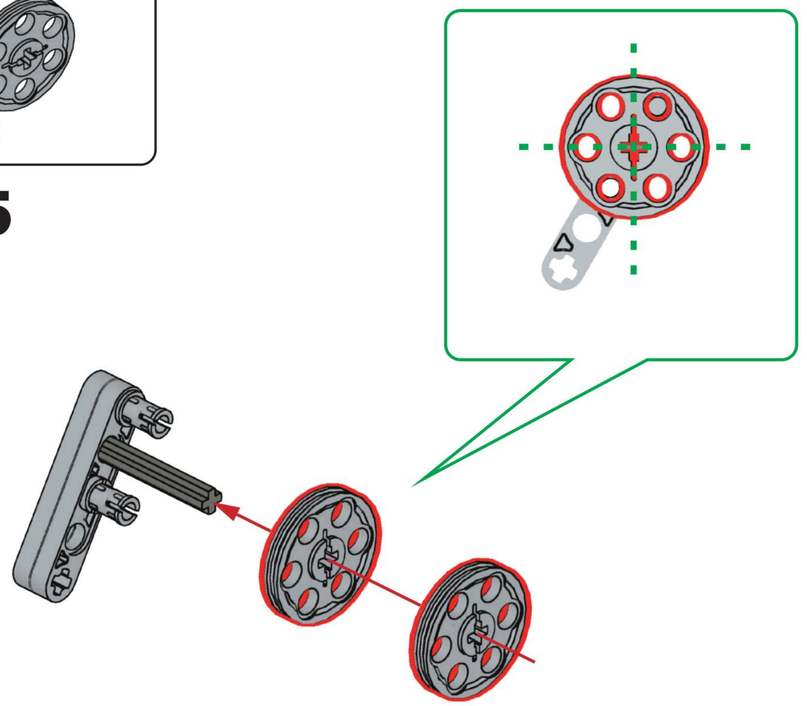

A16

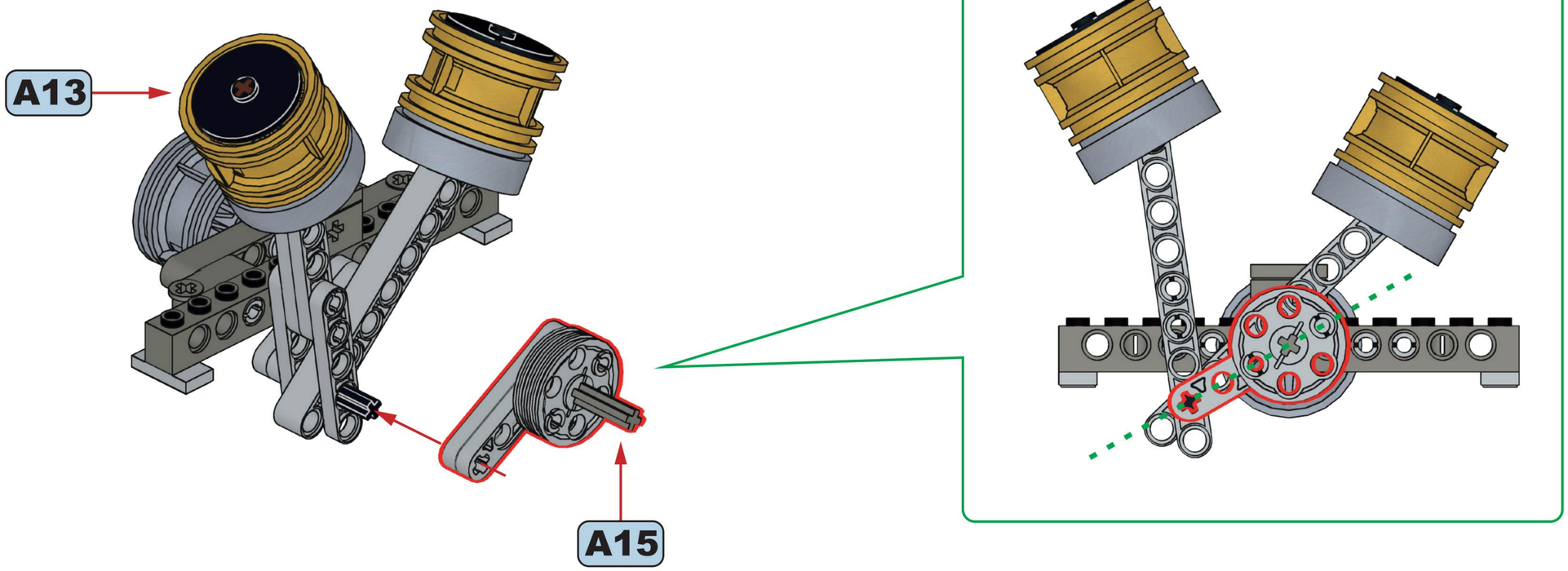

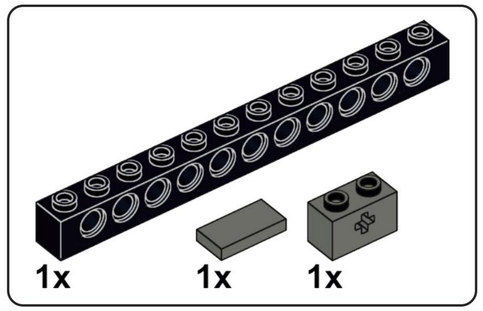

A17

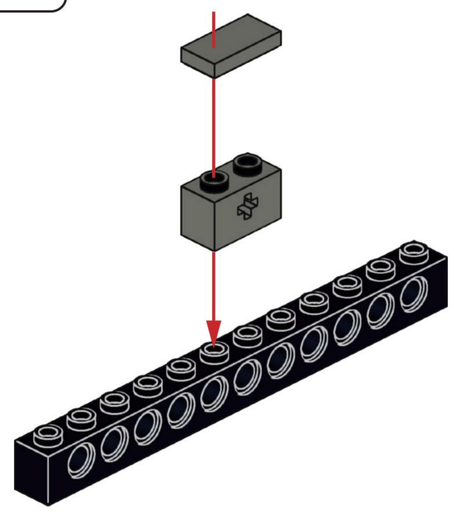

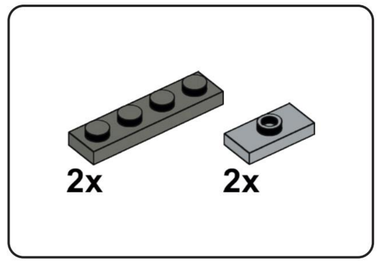

A18

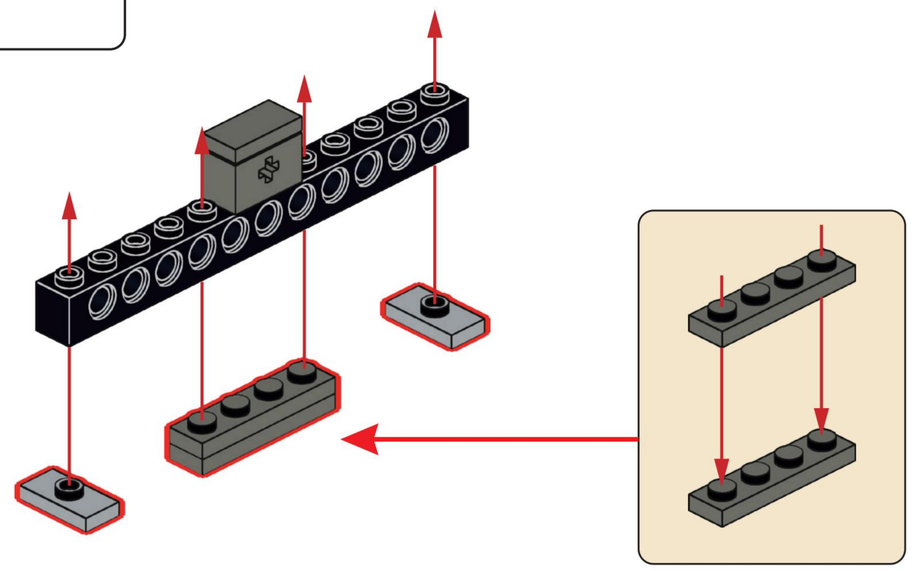

A19

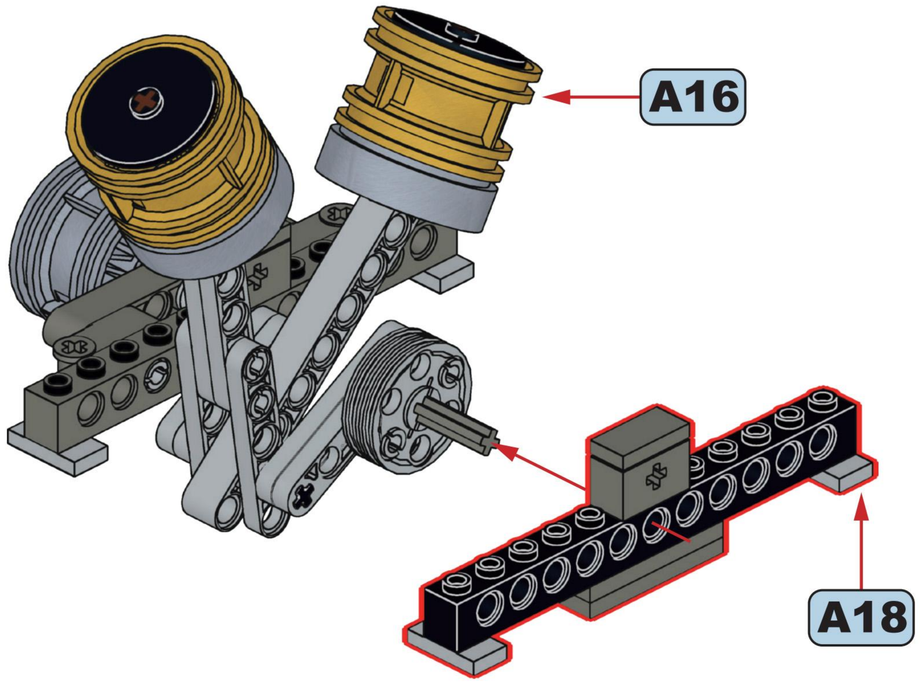

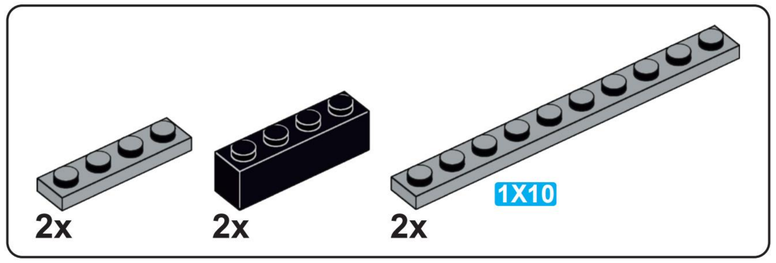

A20

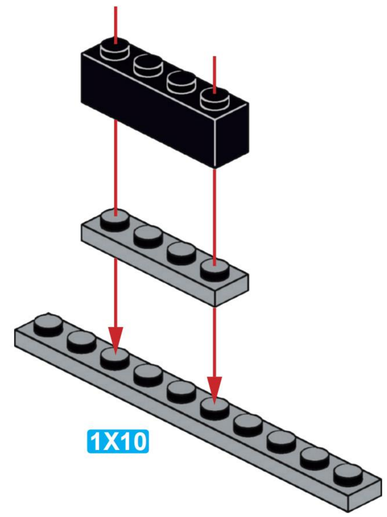

x2

A21

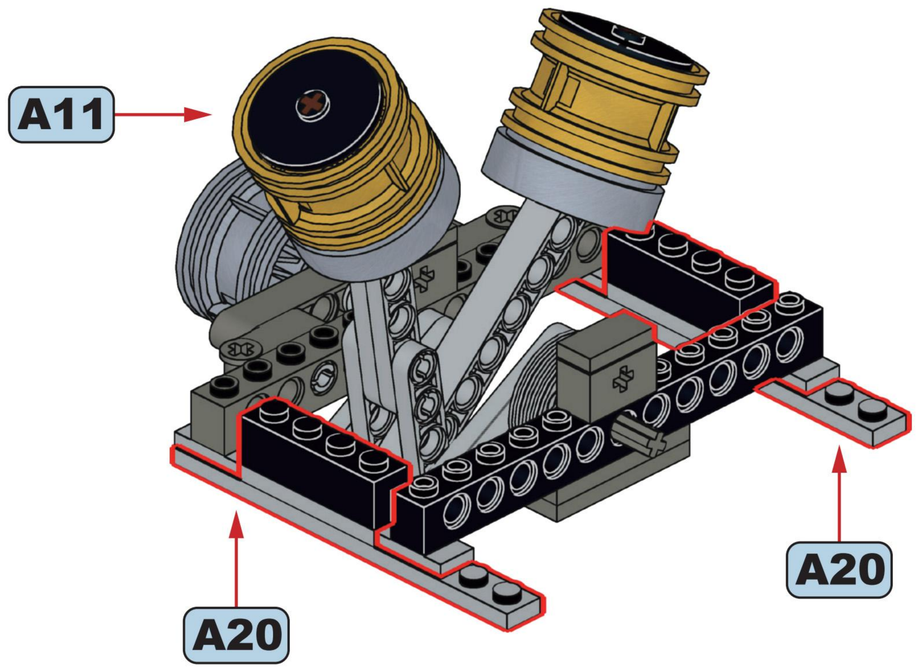

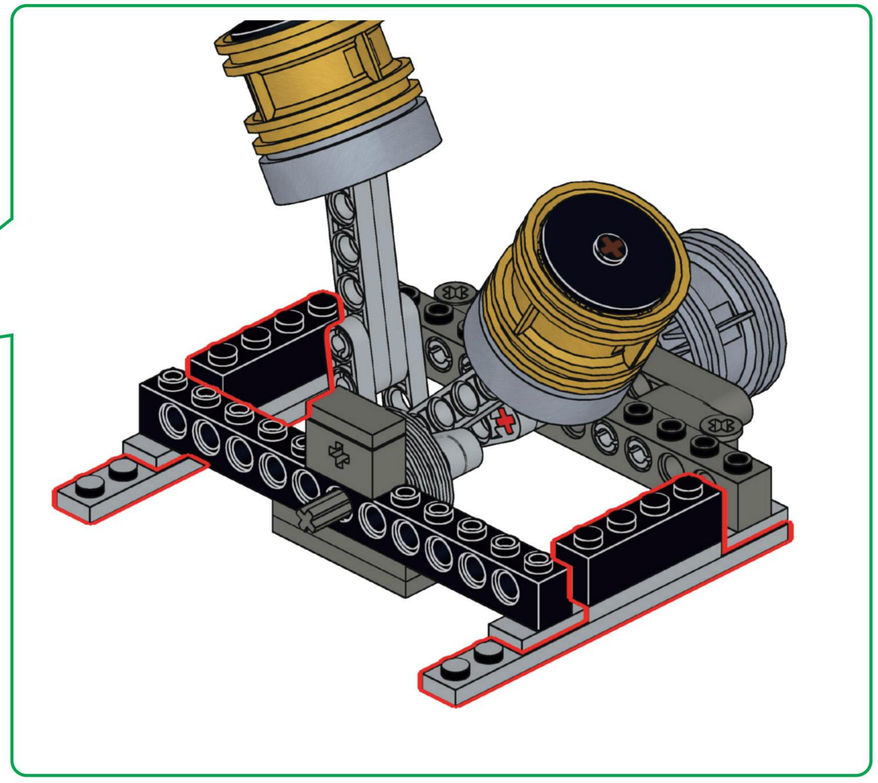

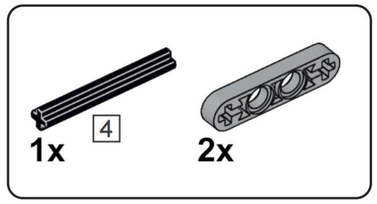

A22

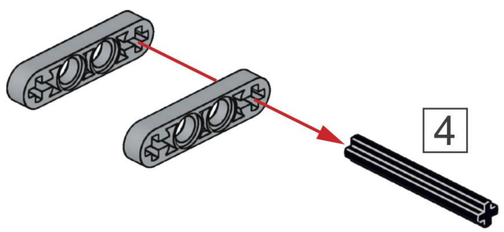

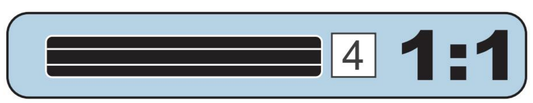

A23

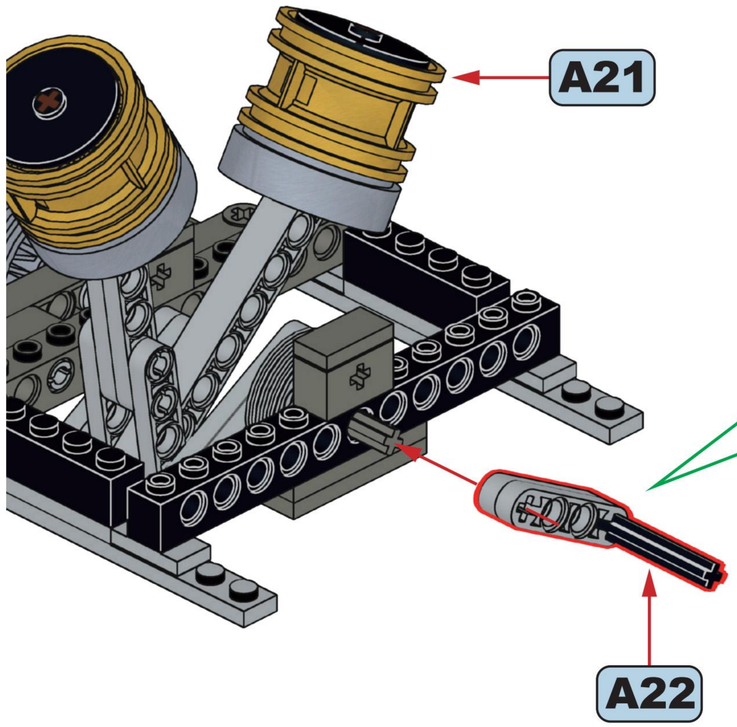

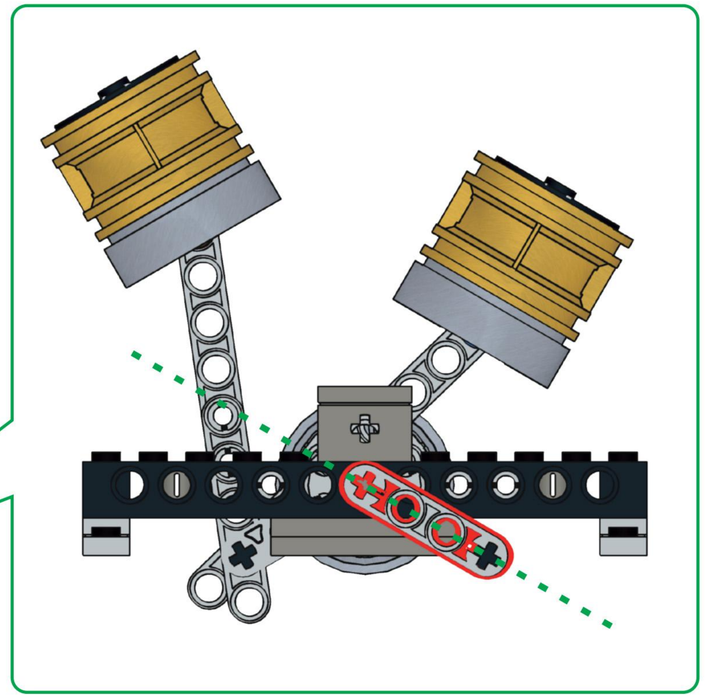

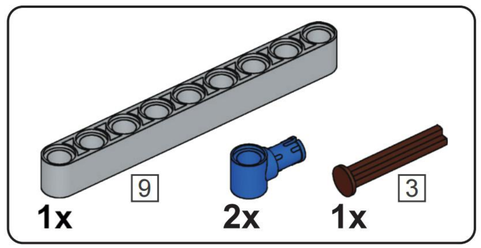

A24

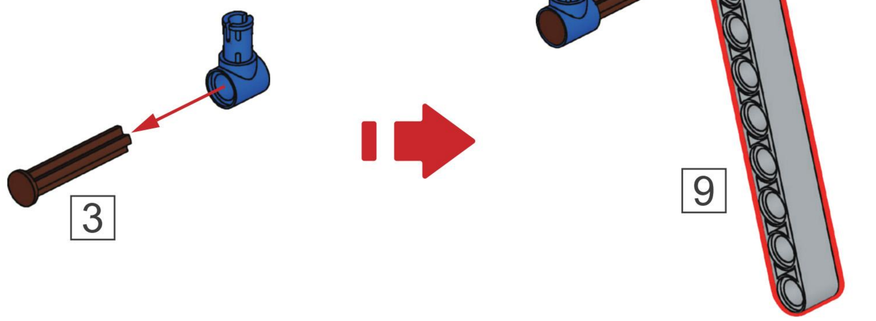

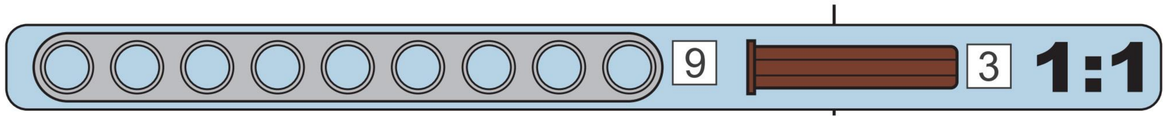

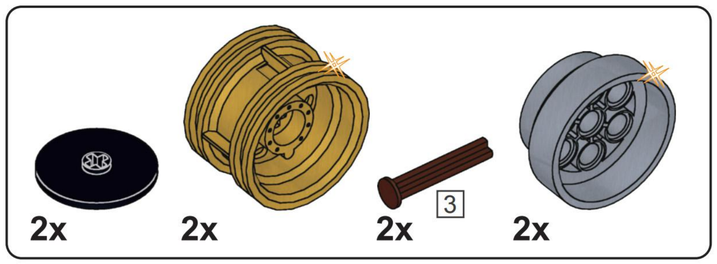

A25

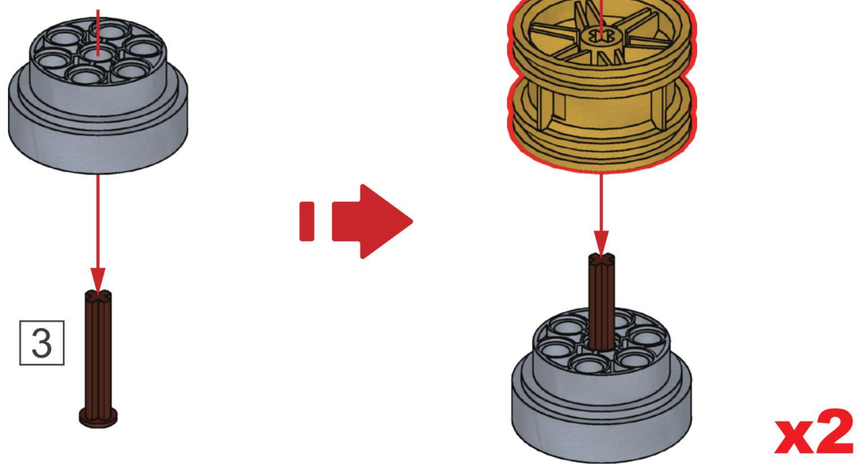

A26

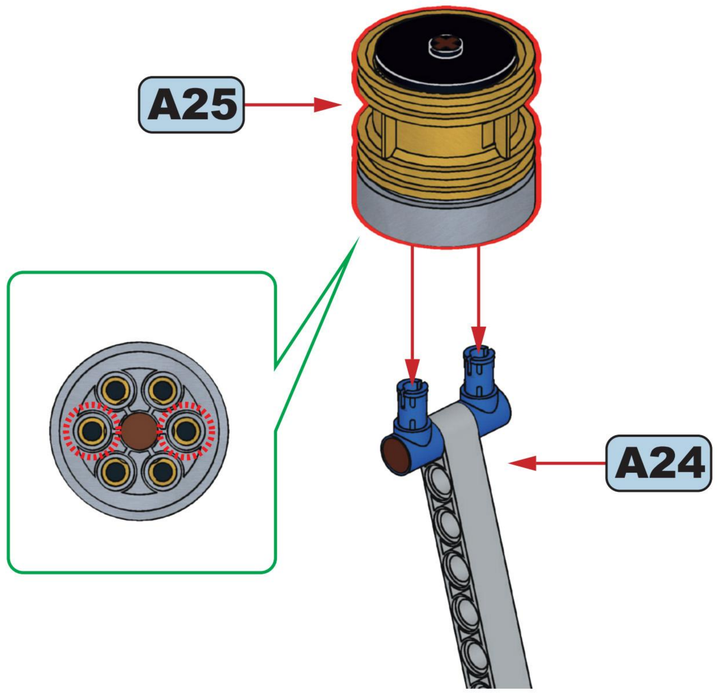

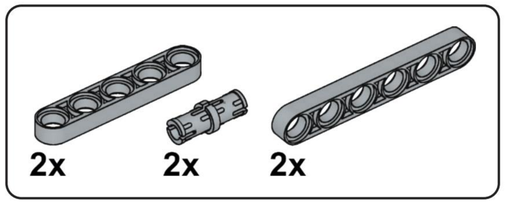

A27

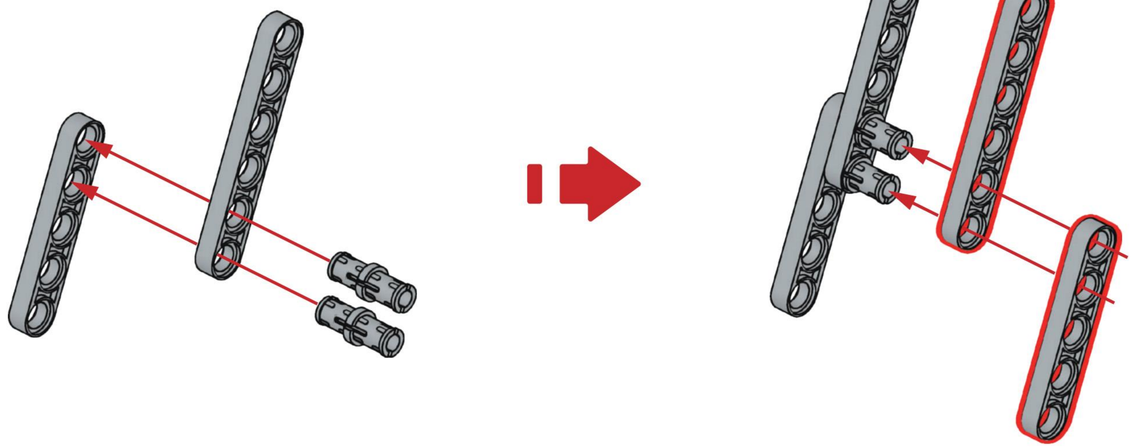

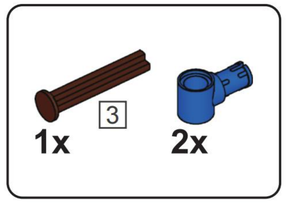

A28

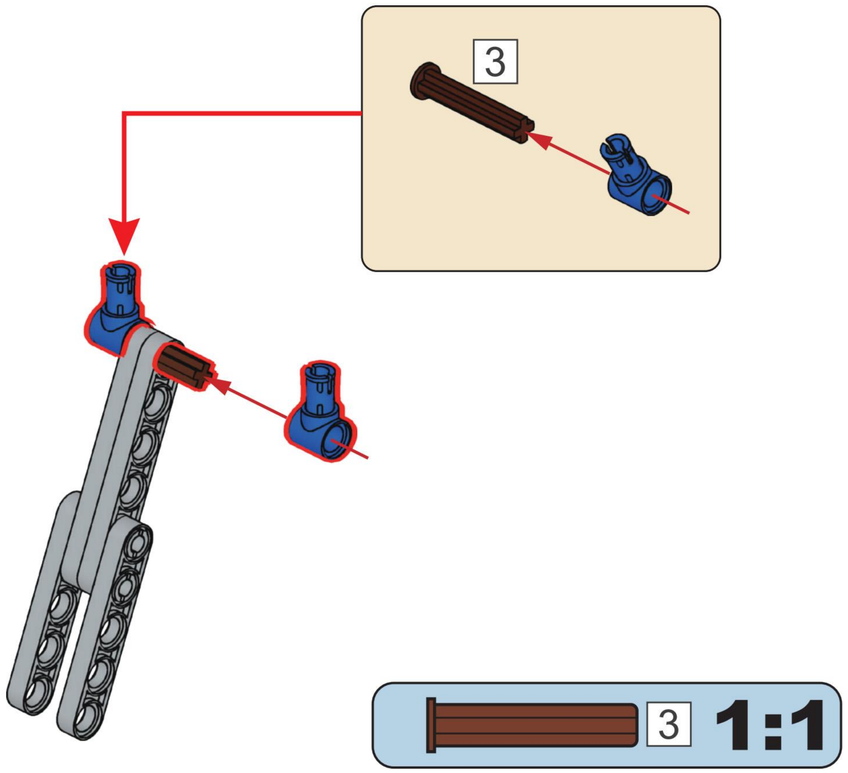

A29

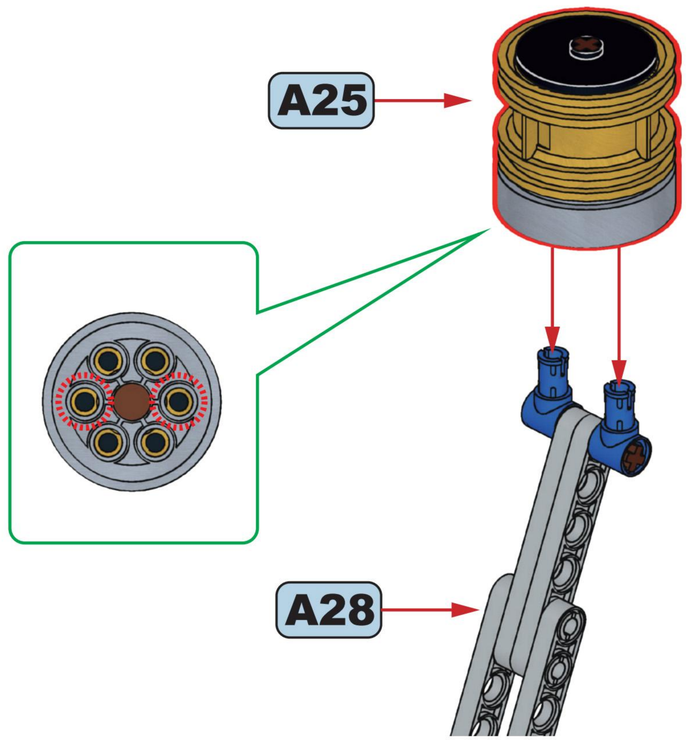

A30

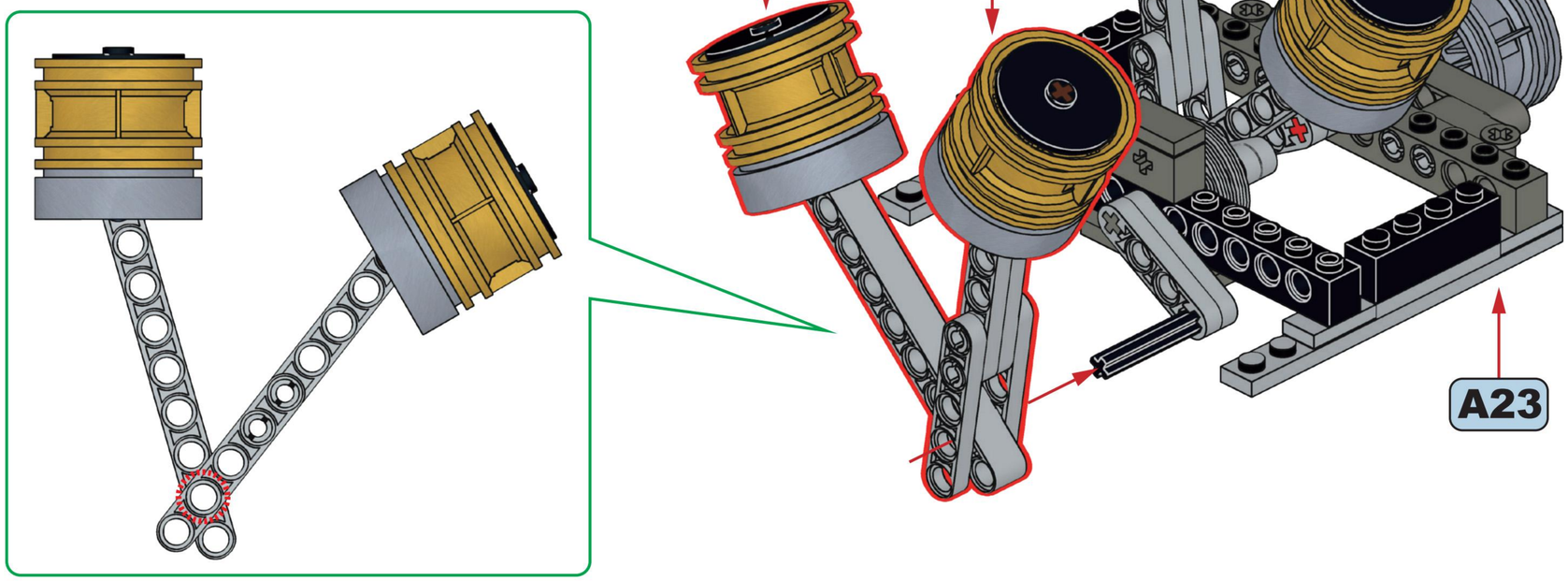

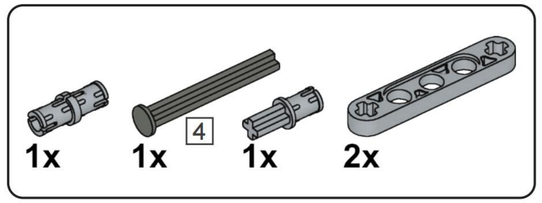

A31

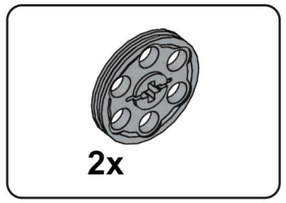

A32

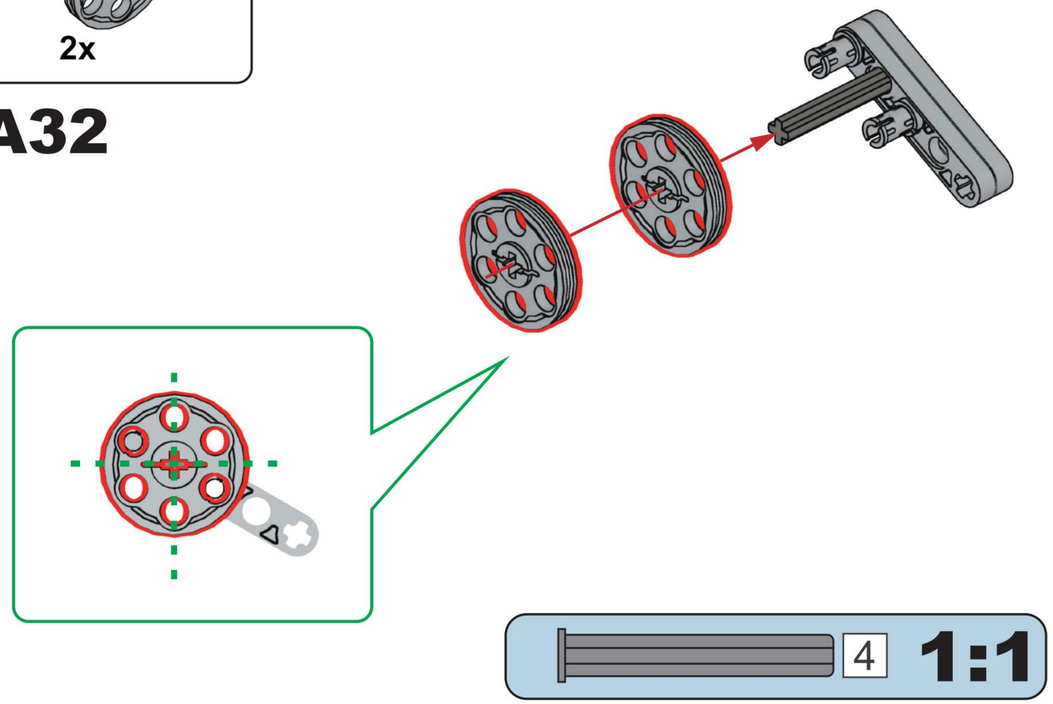

A33

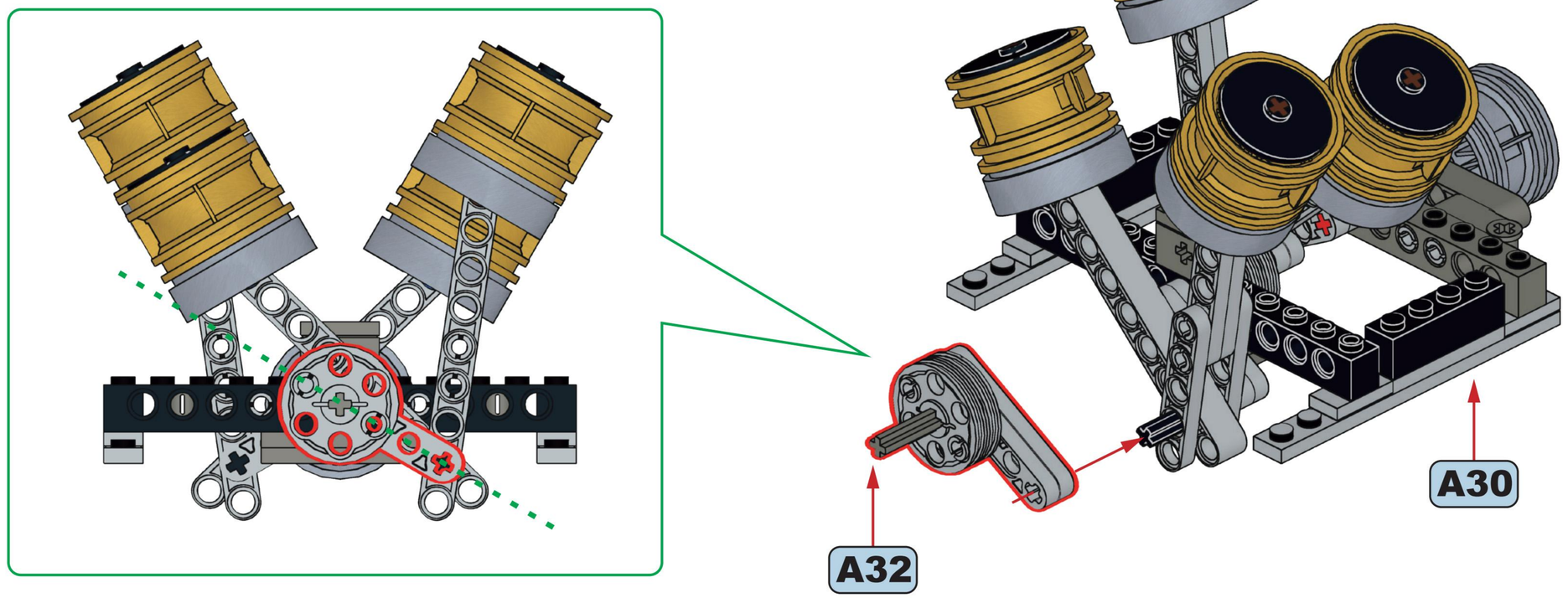

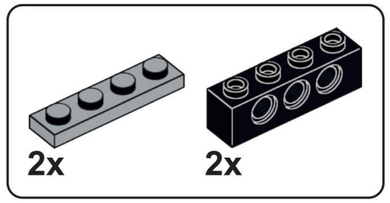

A34

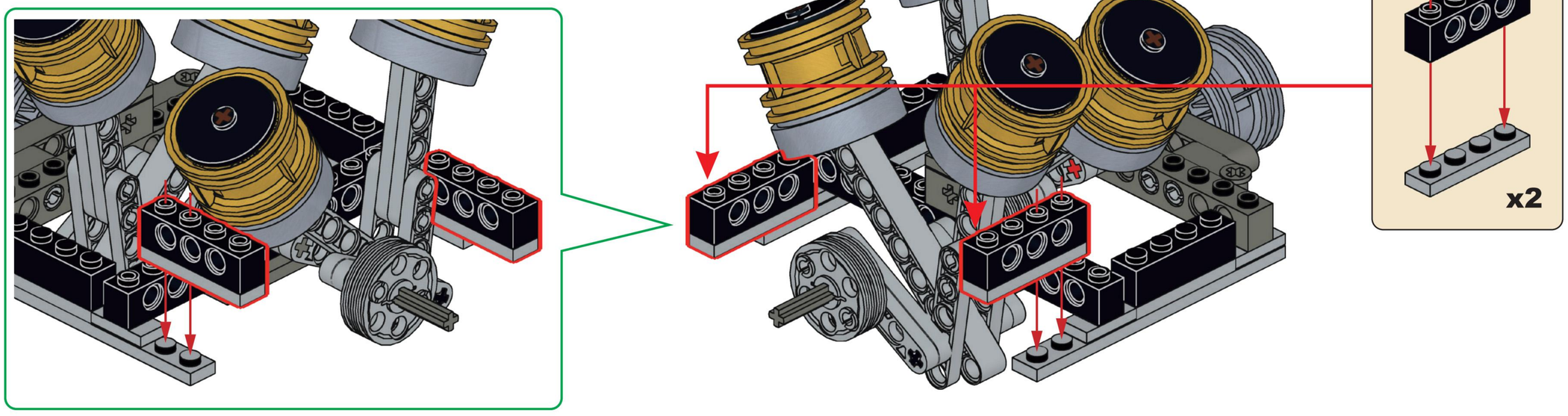

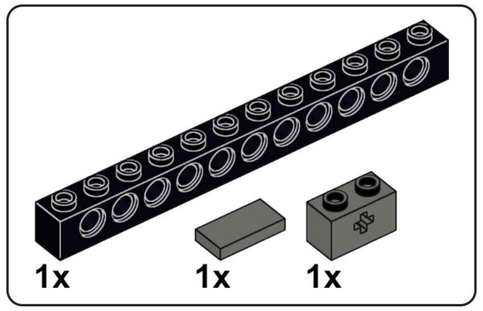

A35

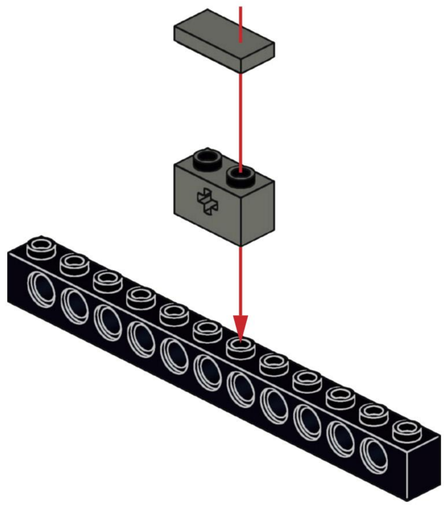

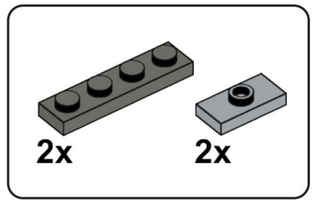

A36

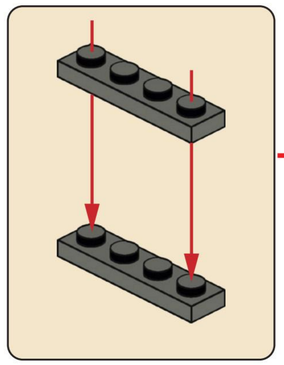

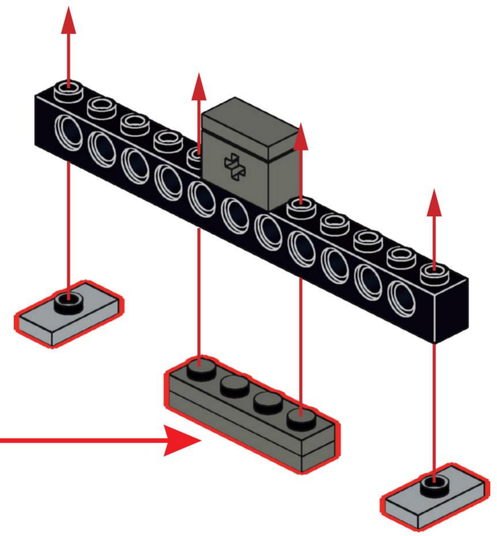

A37

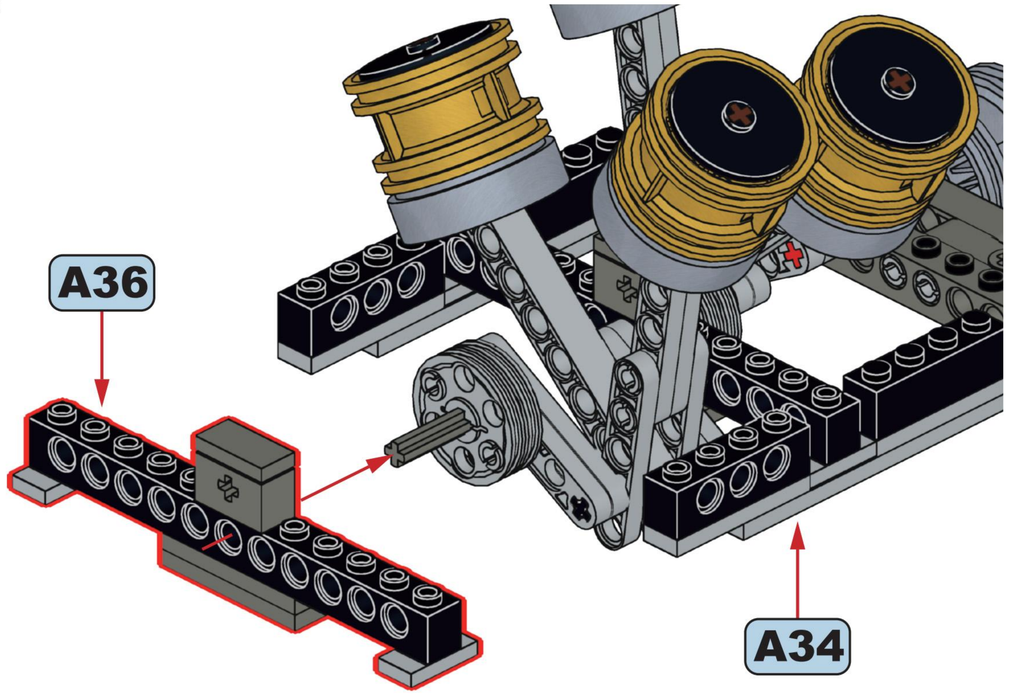

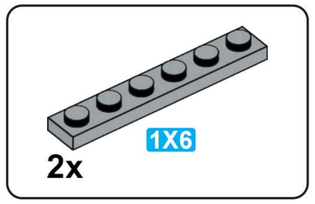

A38

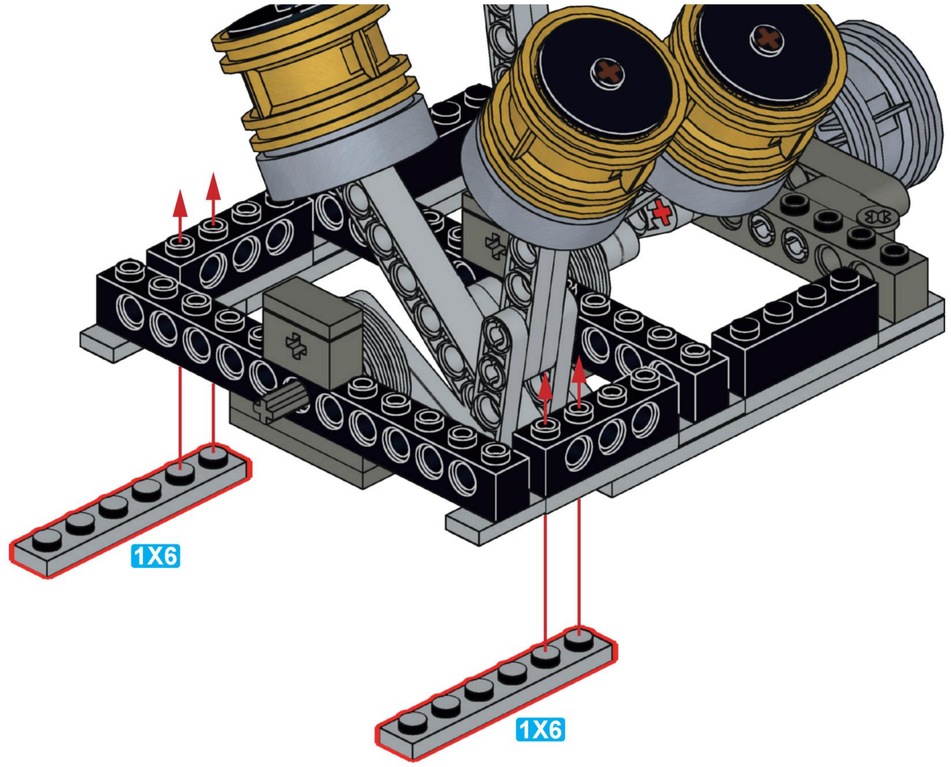

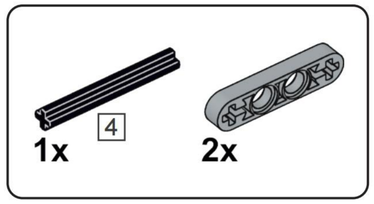

A39

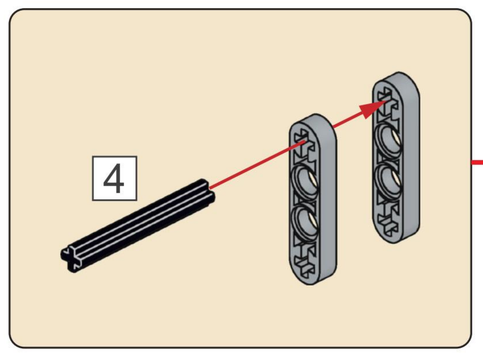

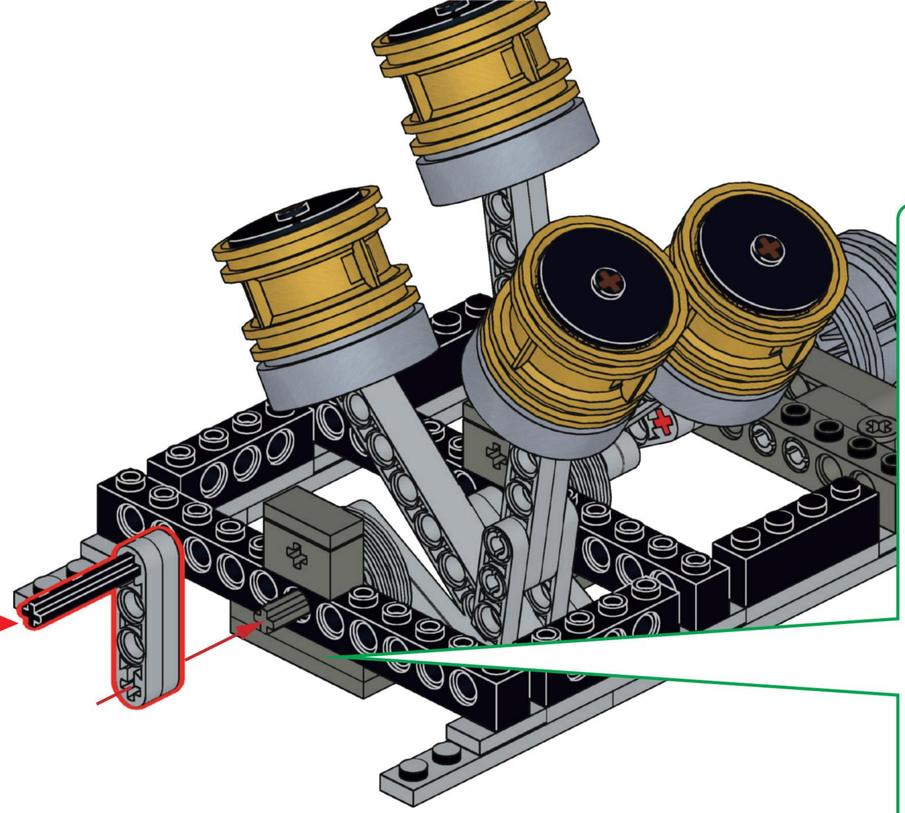

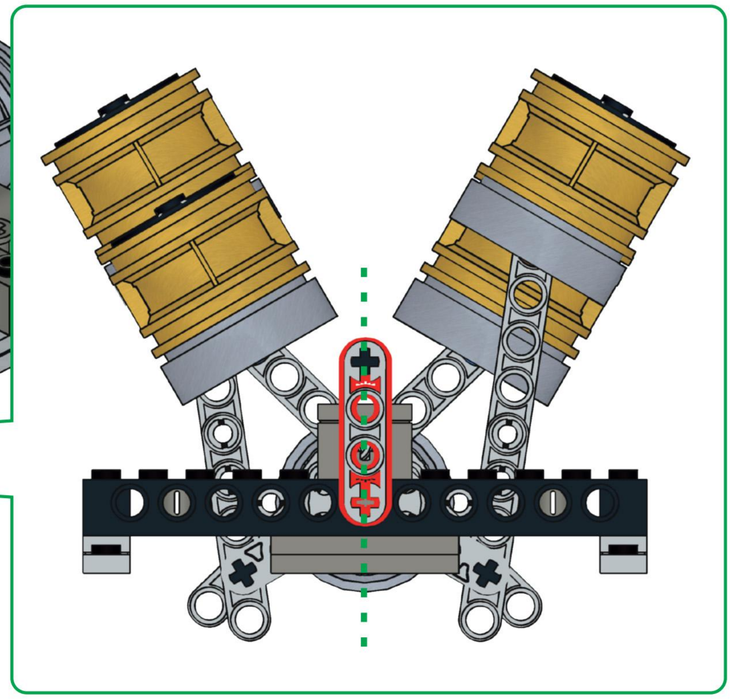

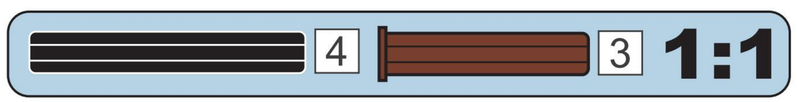

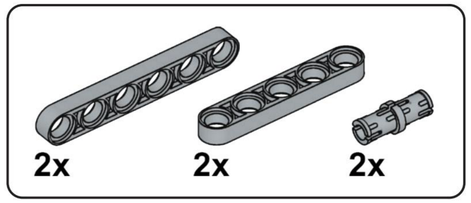

A40

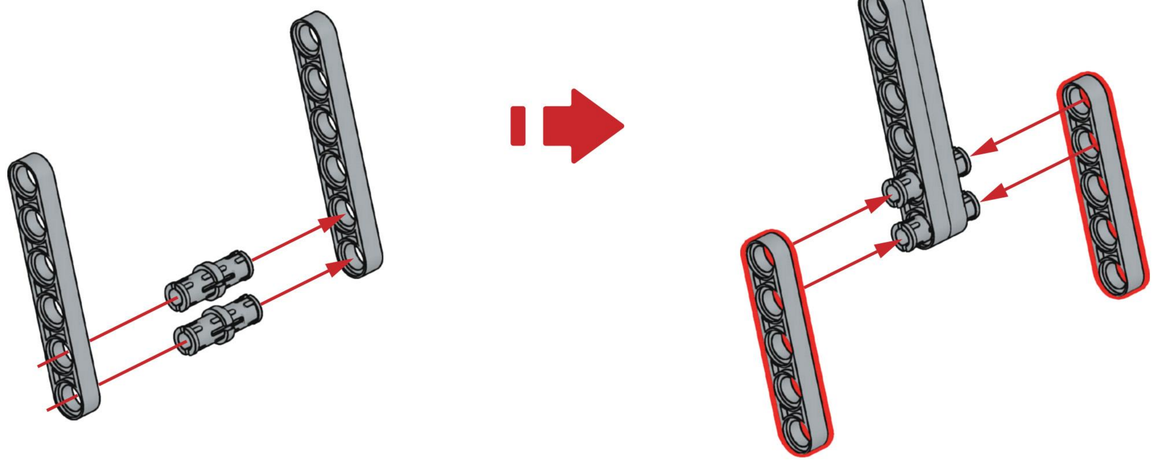

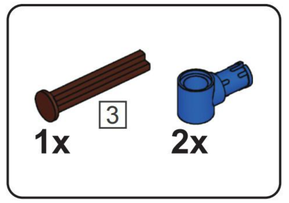

A41

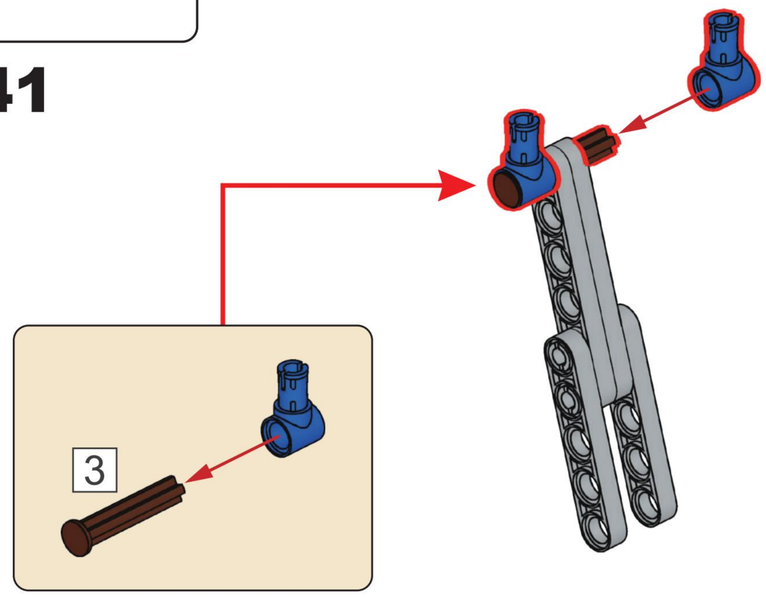

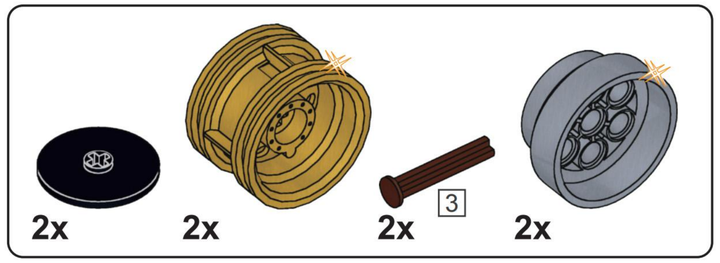

A42

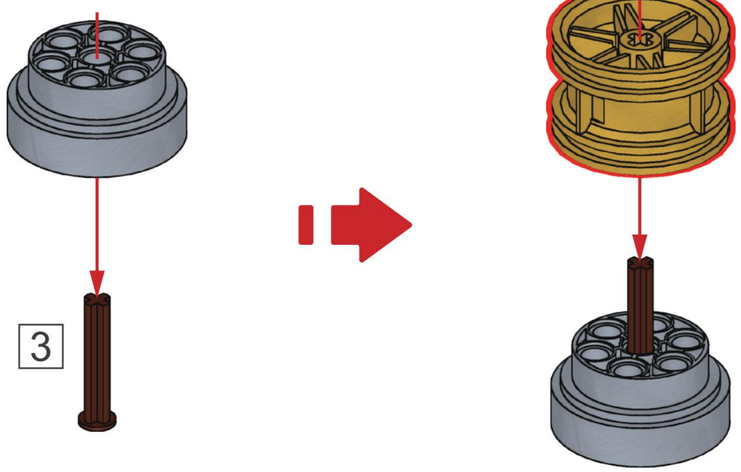

x2

A43

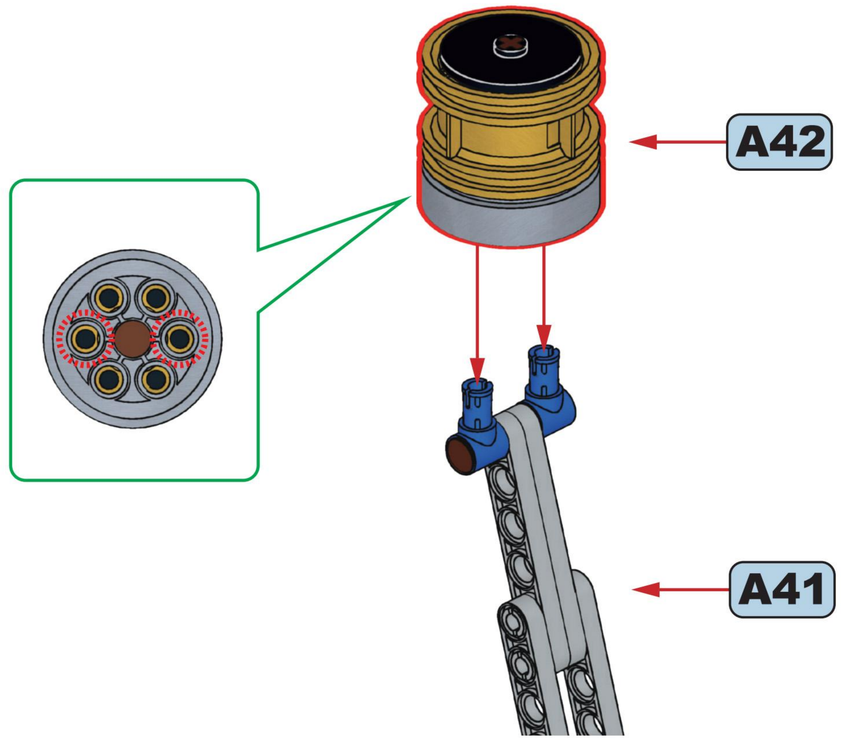

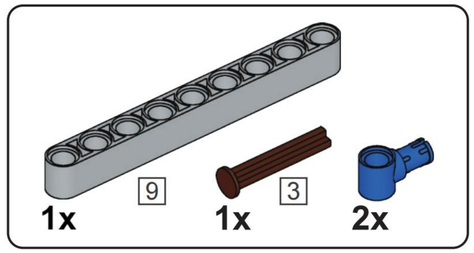

A44

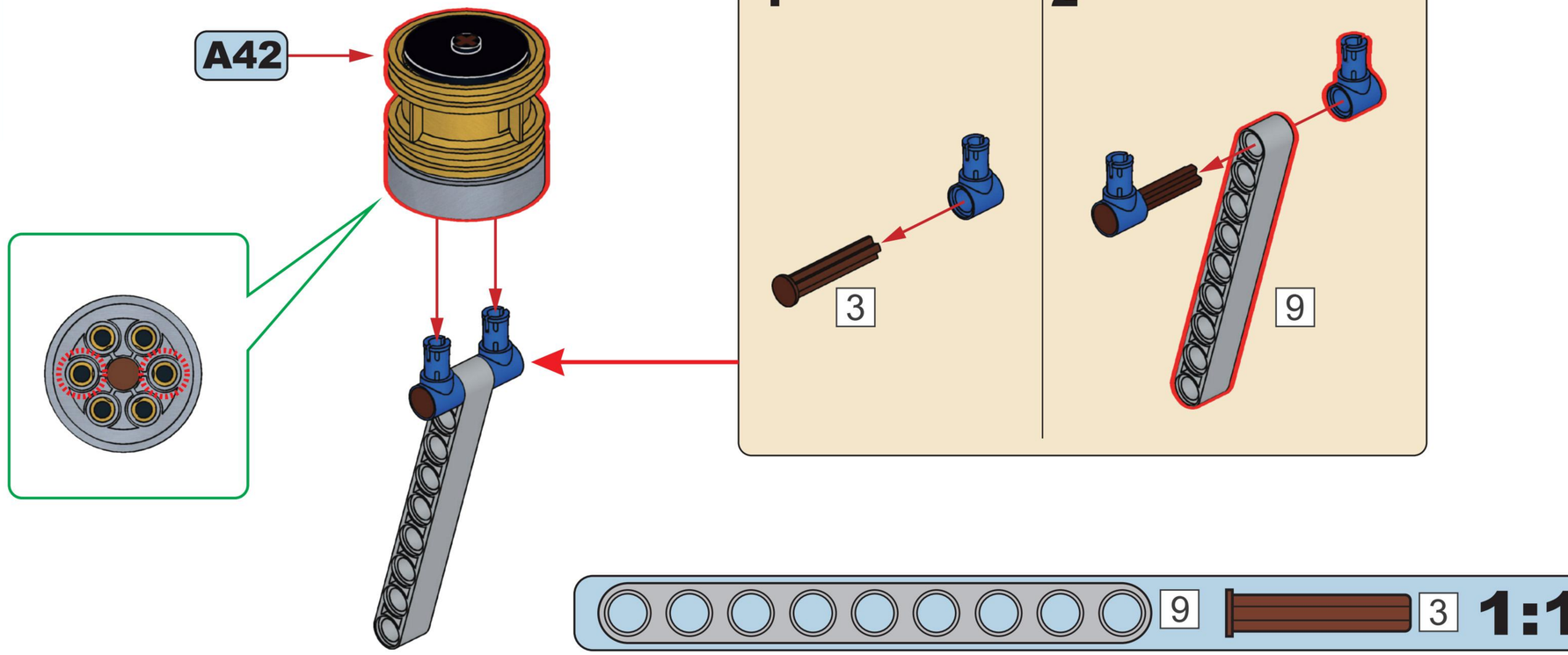

A45

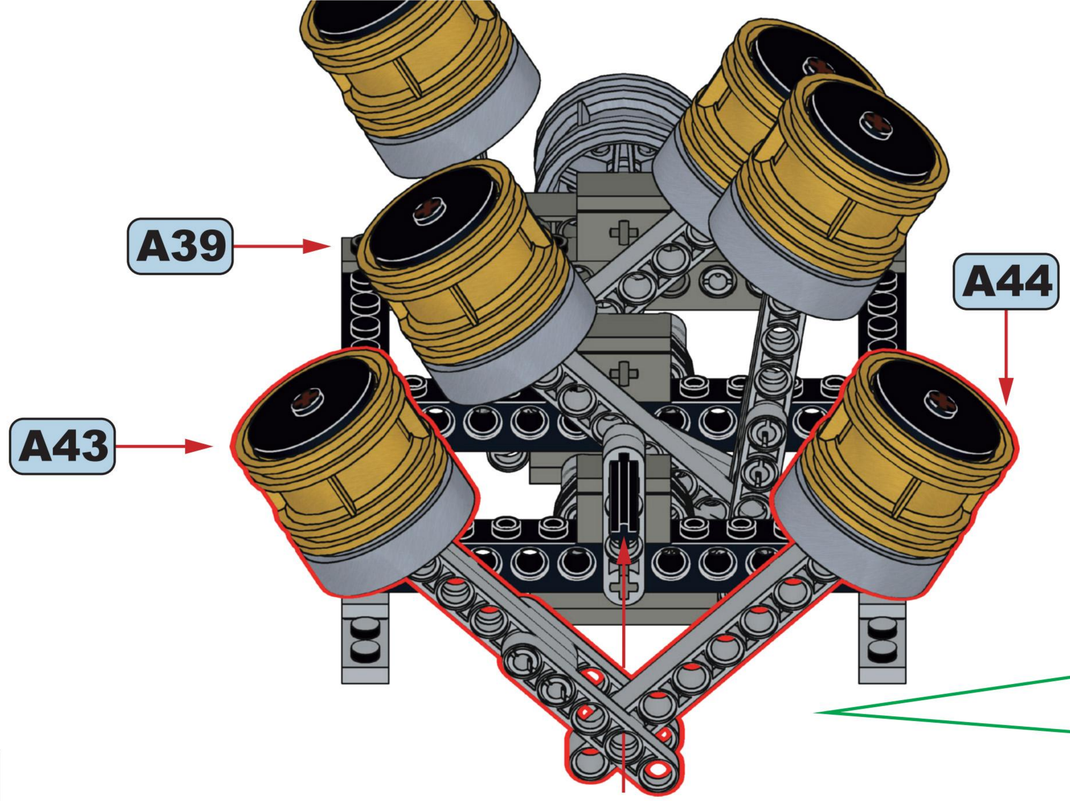

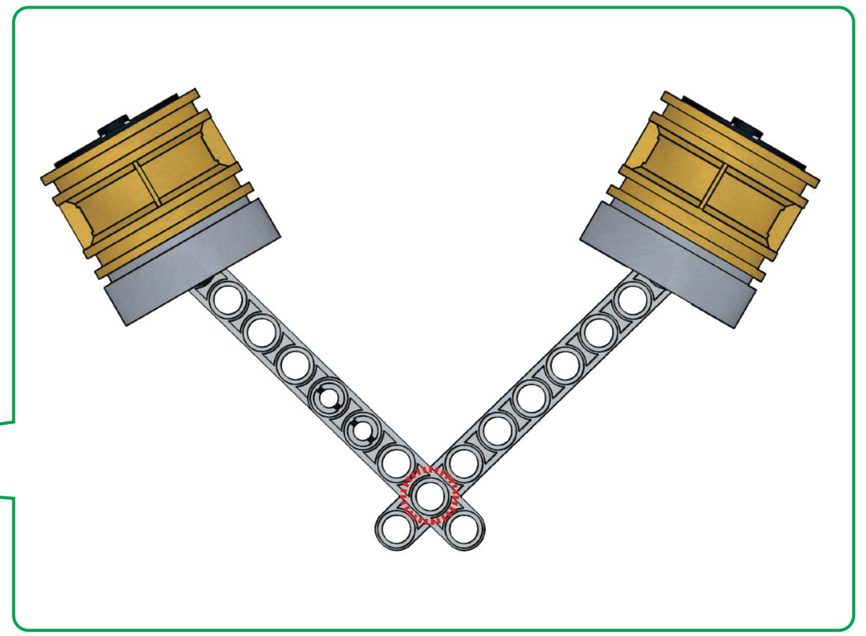

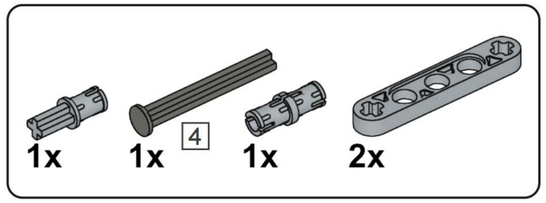

A46

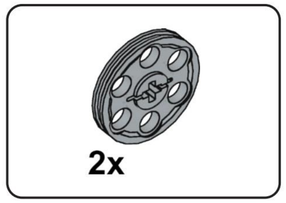

A47

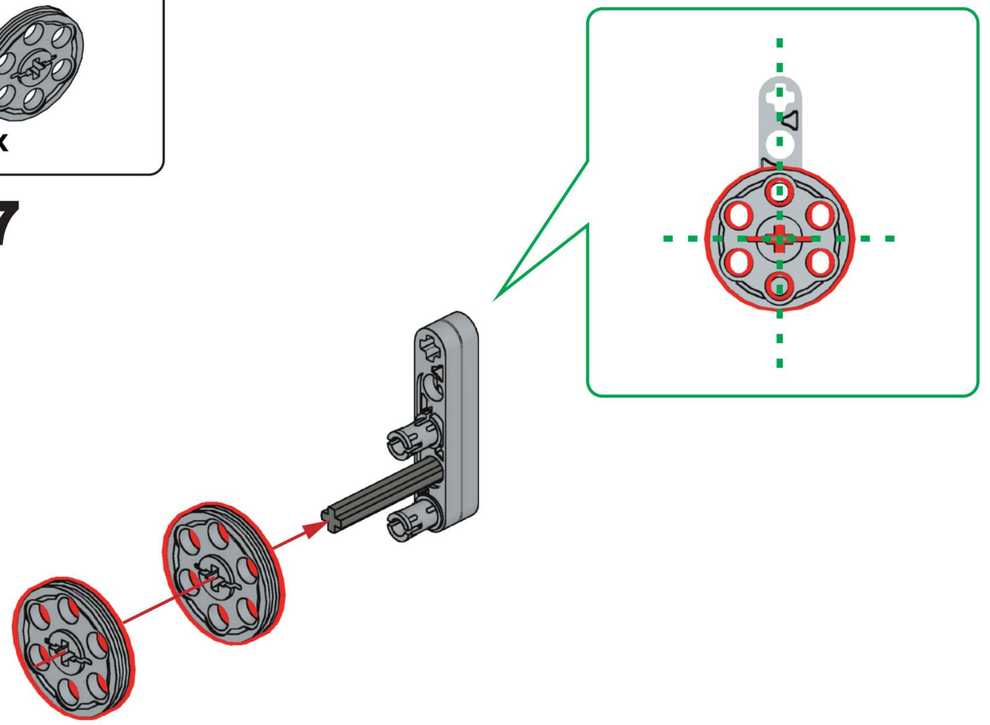

A48

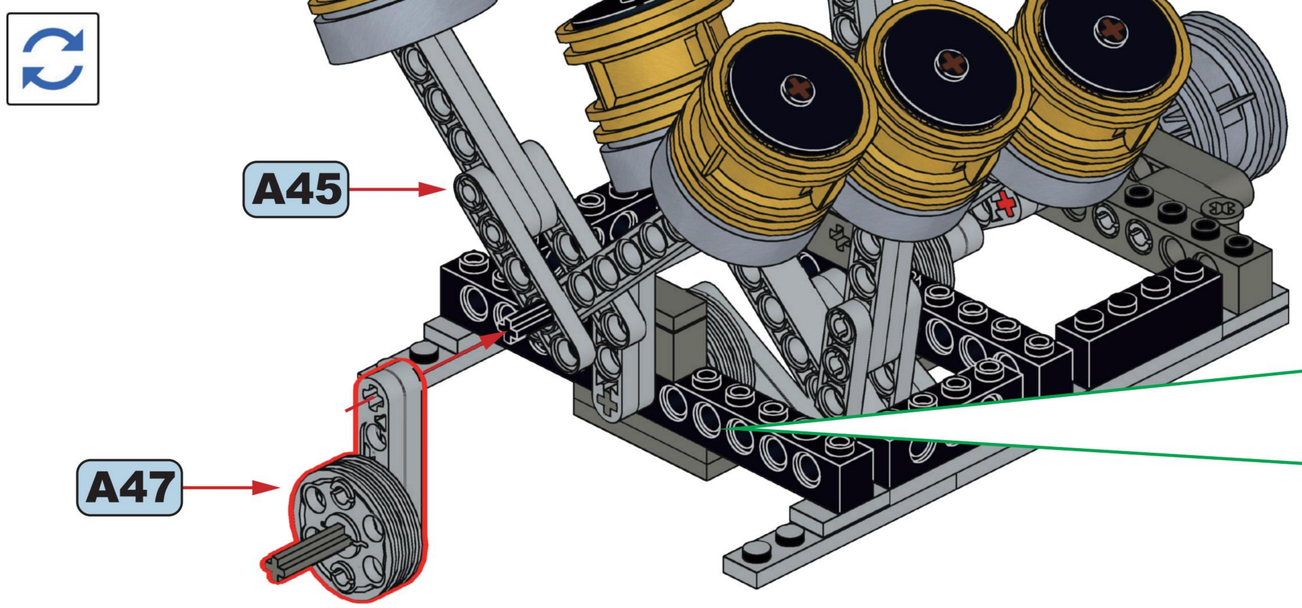

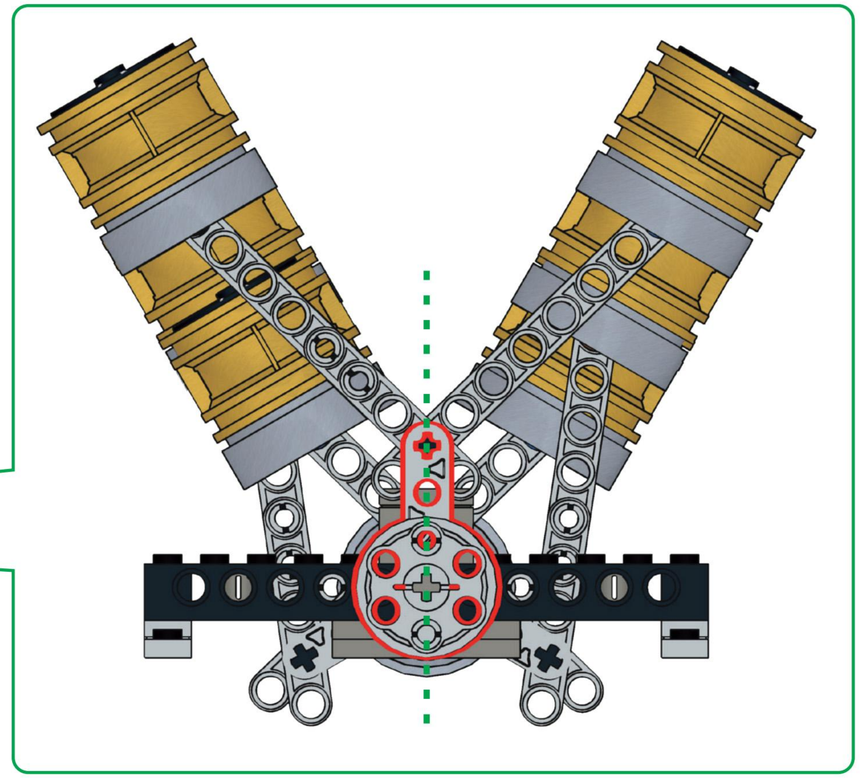

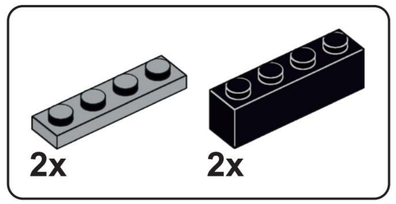

A49

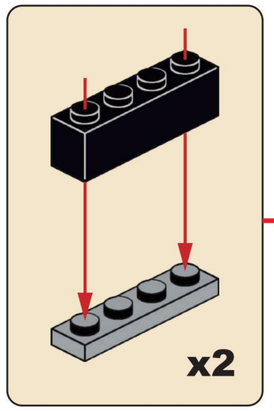

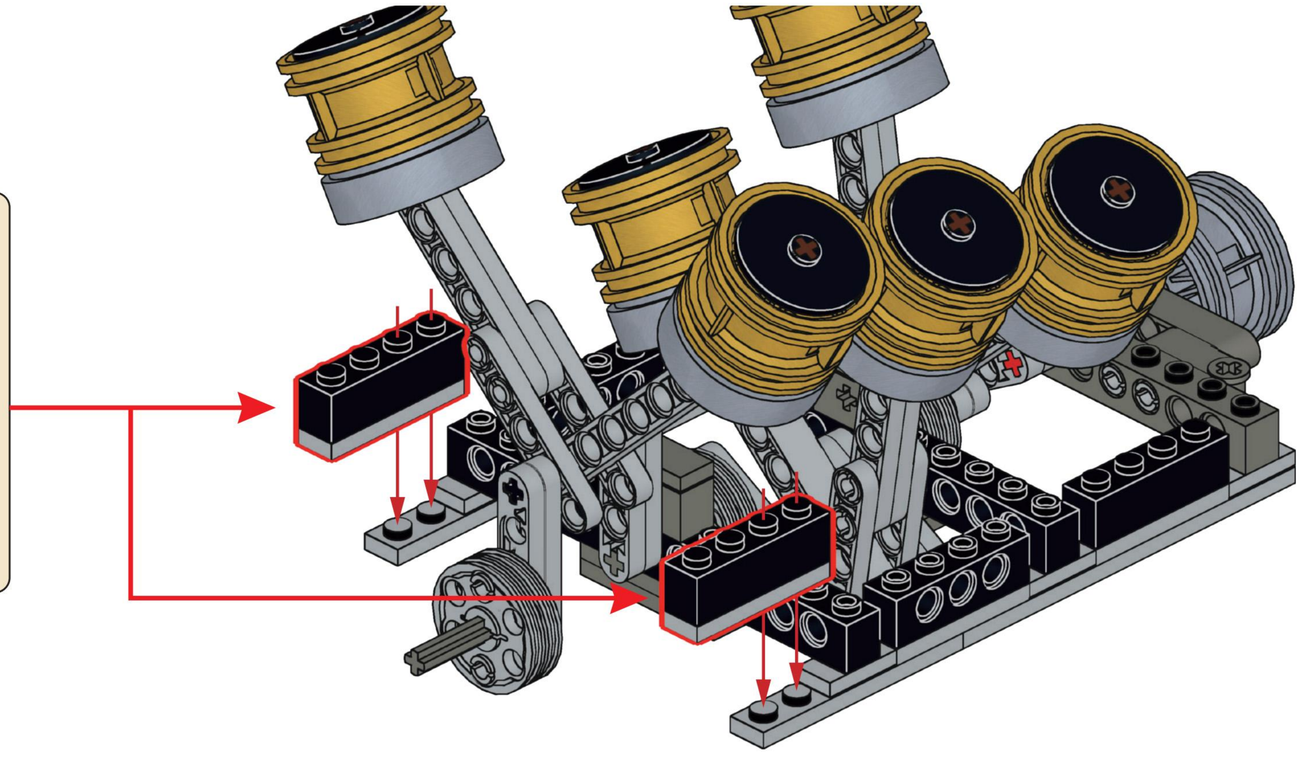

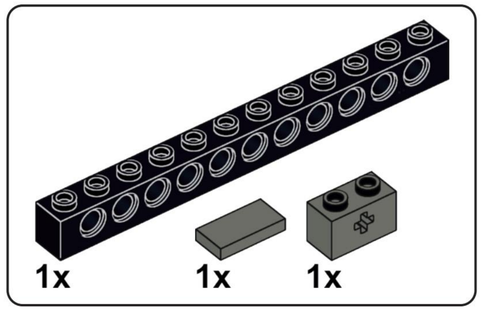

A50

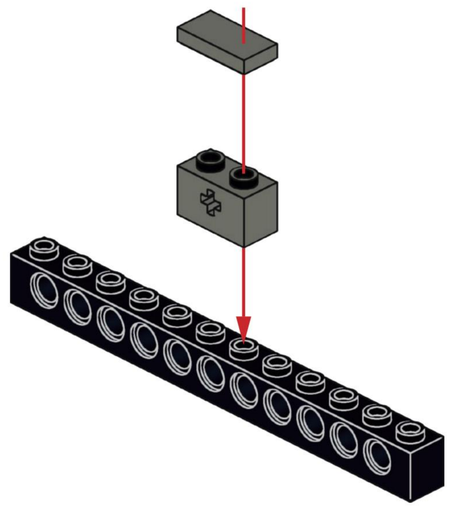

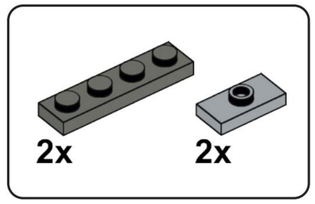

A51

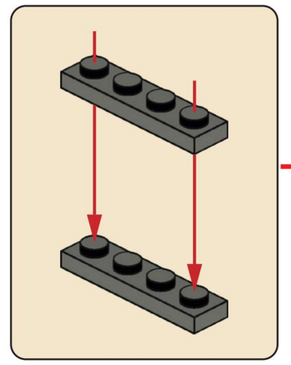

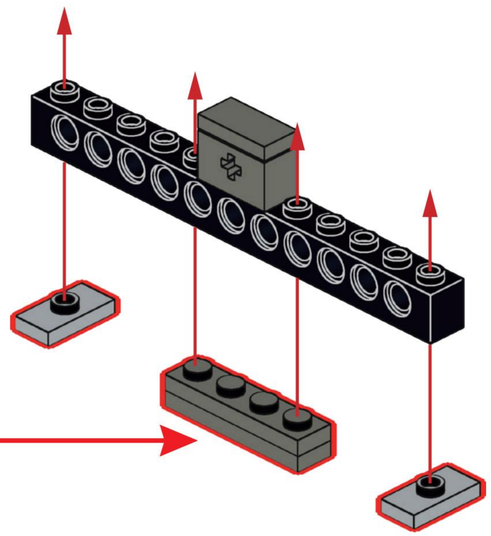

A52

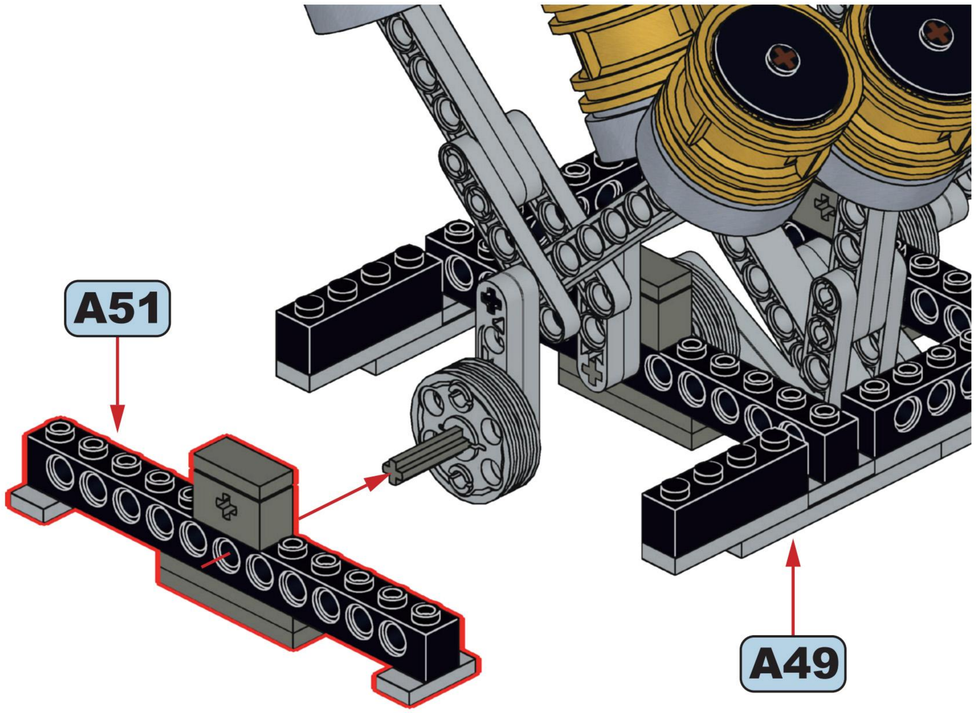

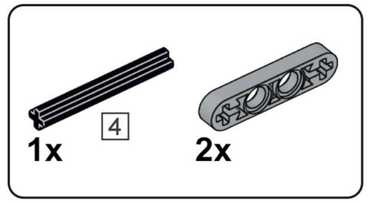

A53

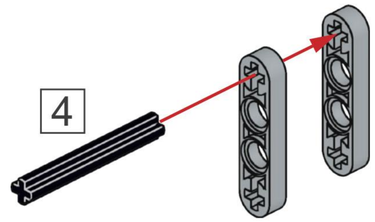



A54

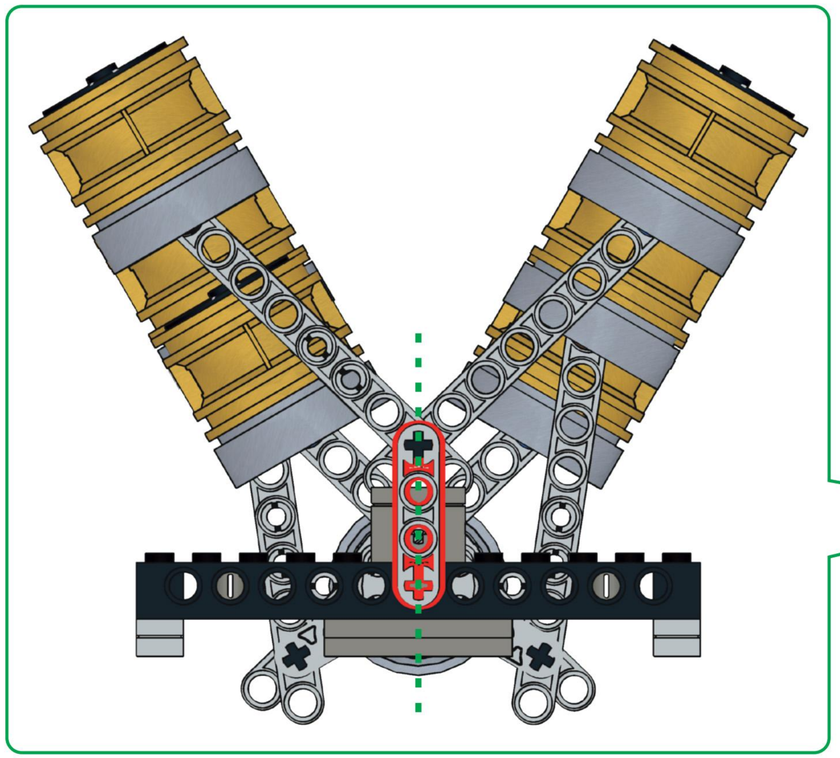

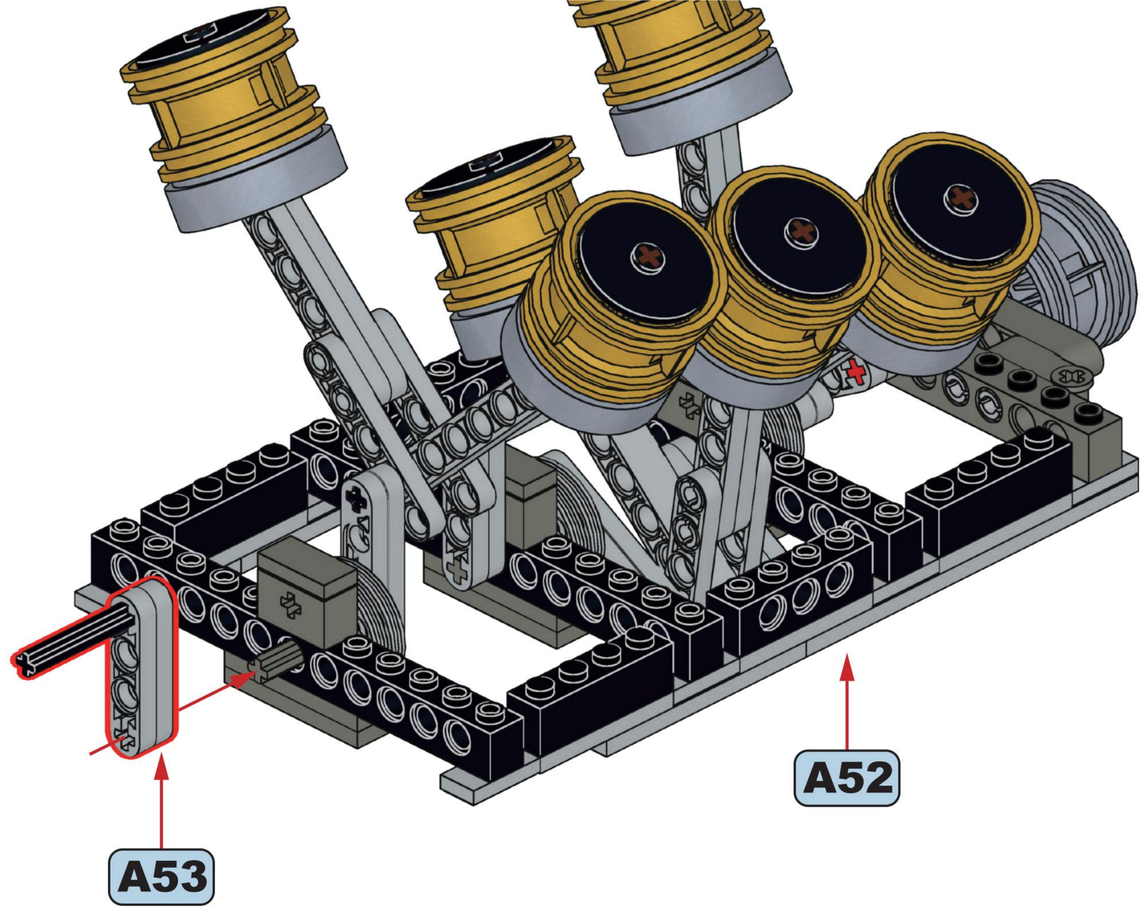

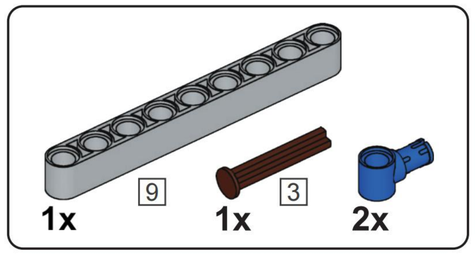

A55

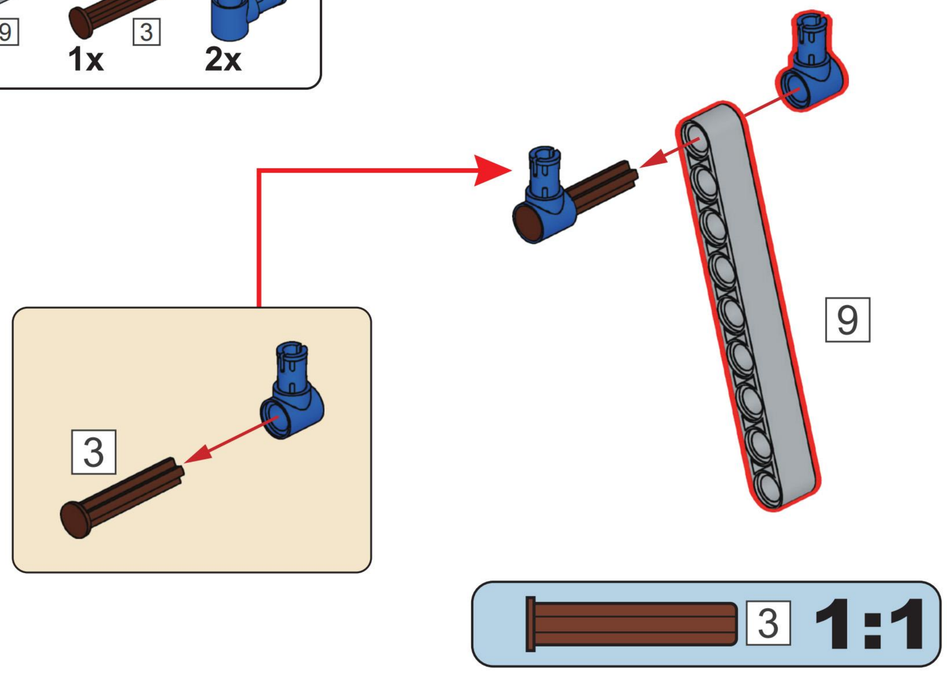

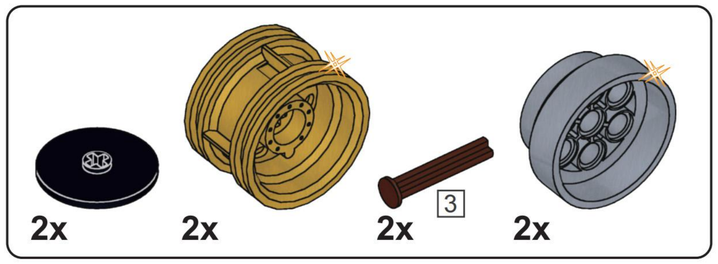

A56

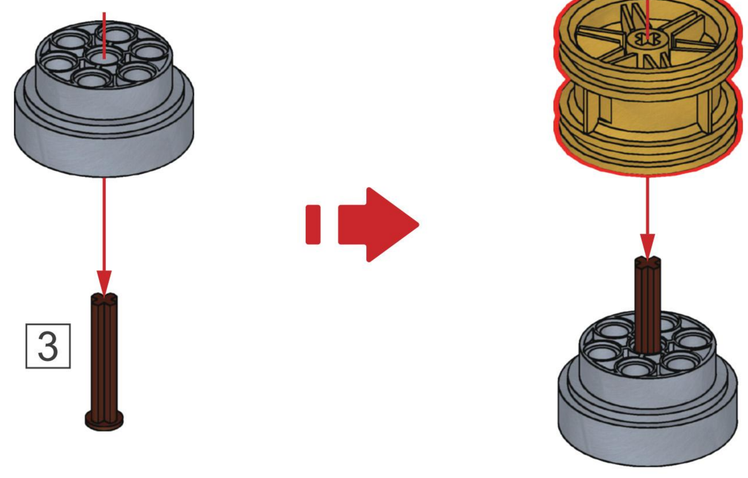

A57

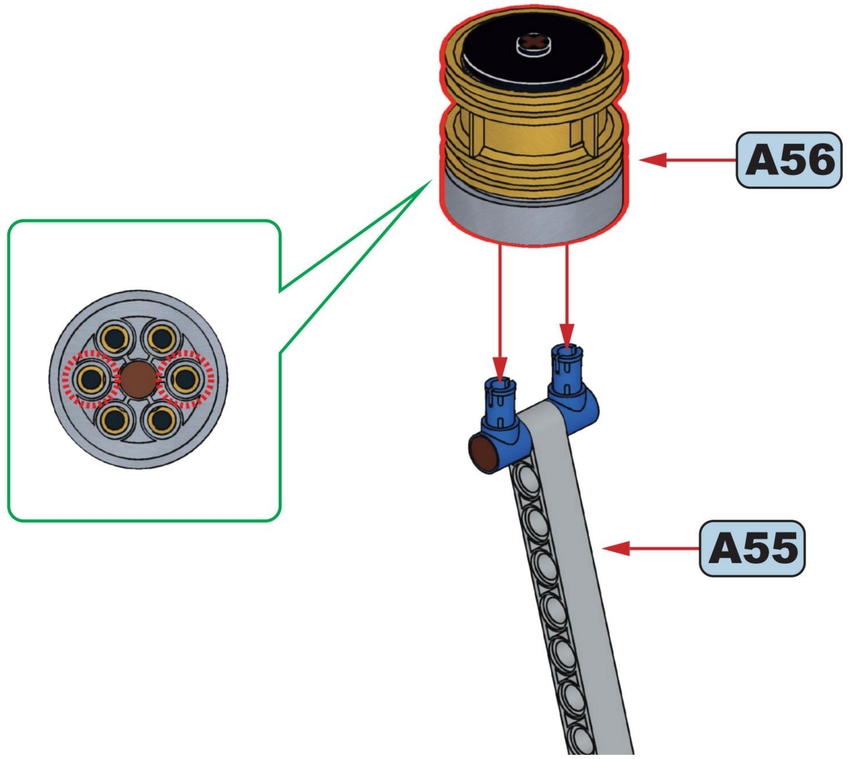

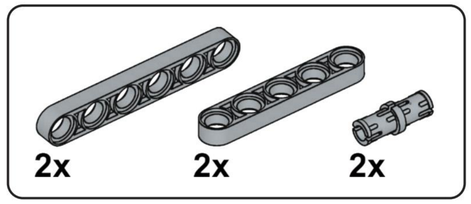

A58

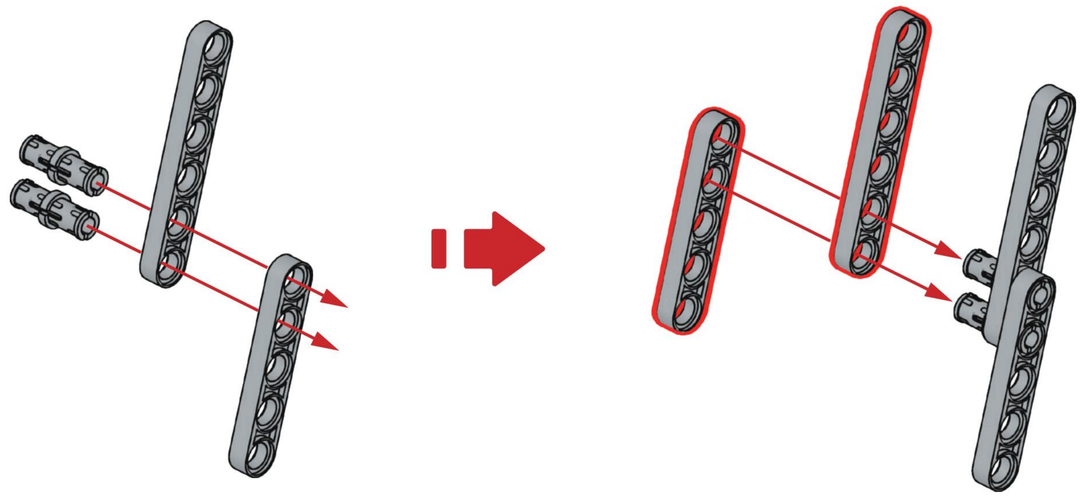

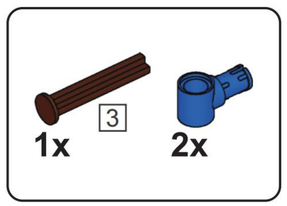

A59

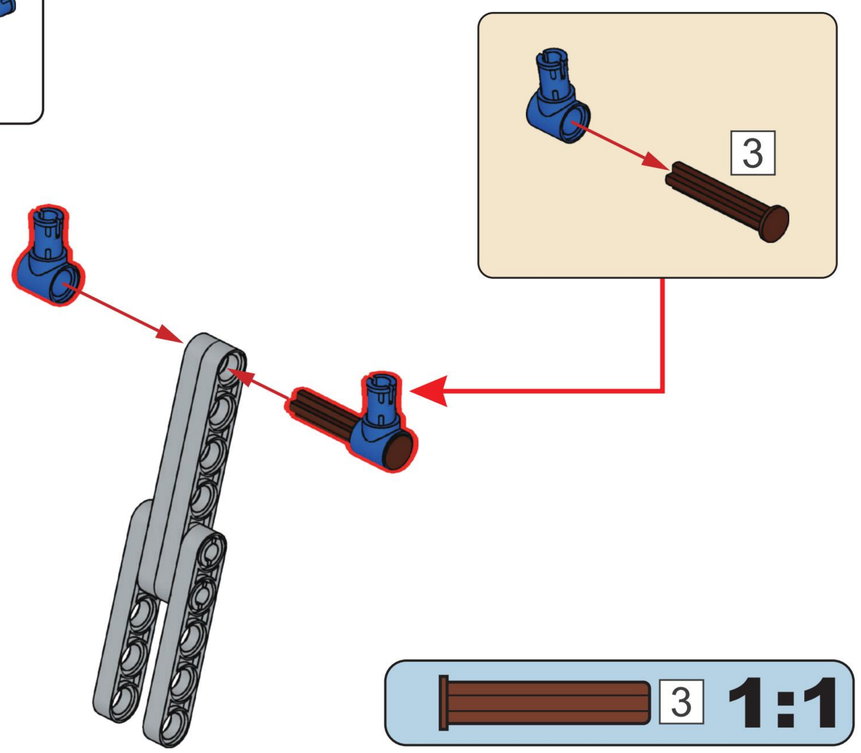

A60

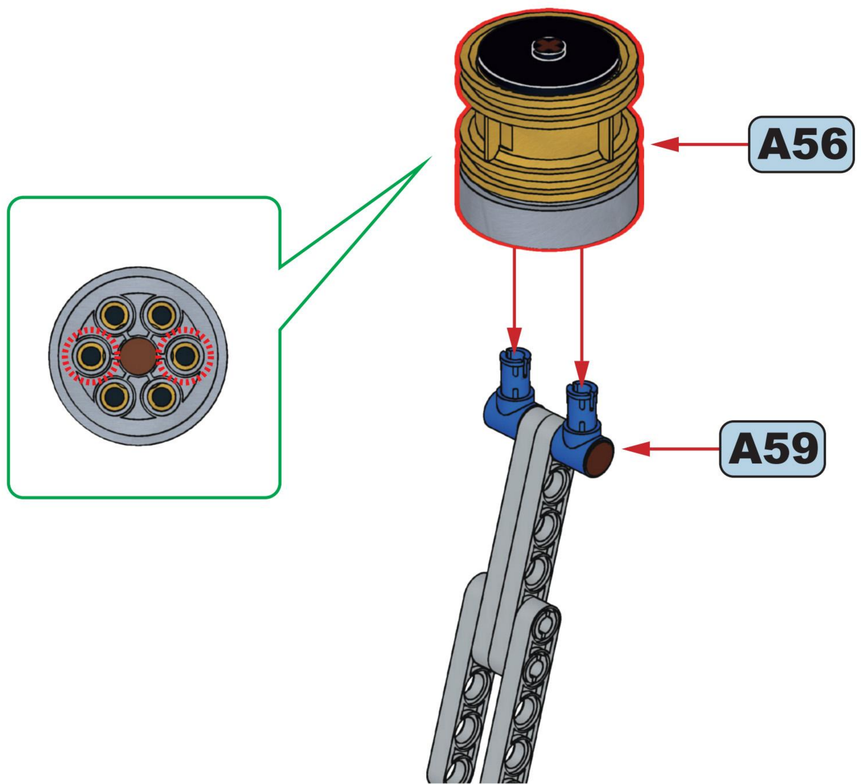

A61

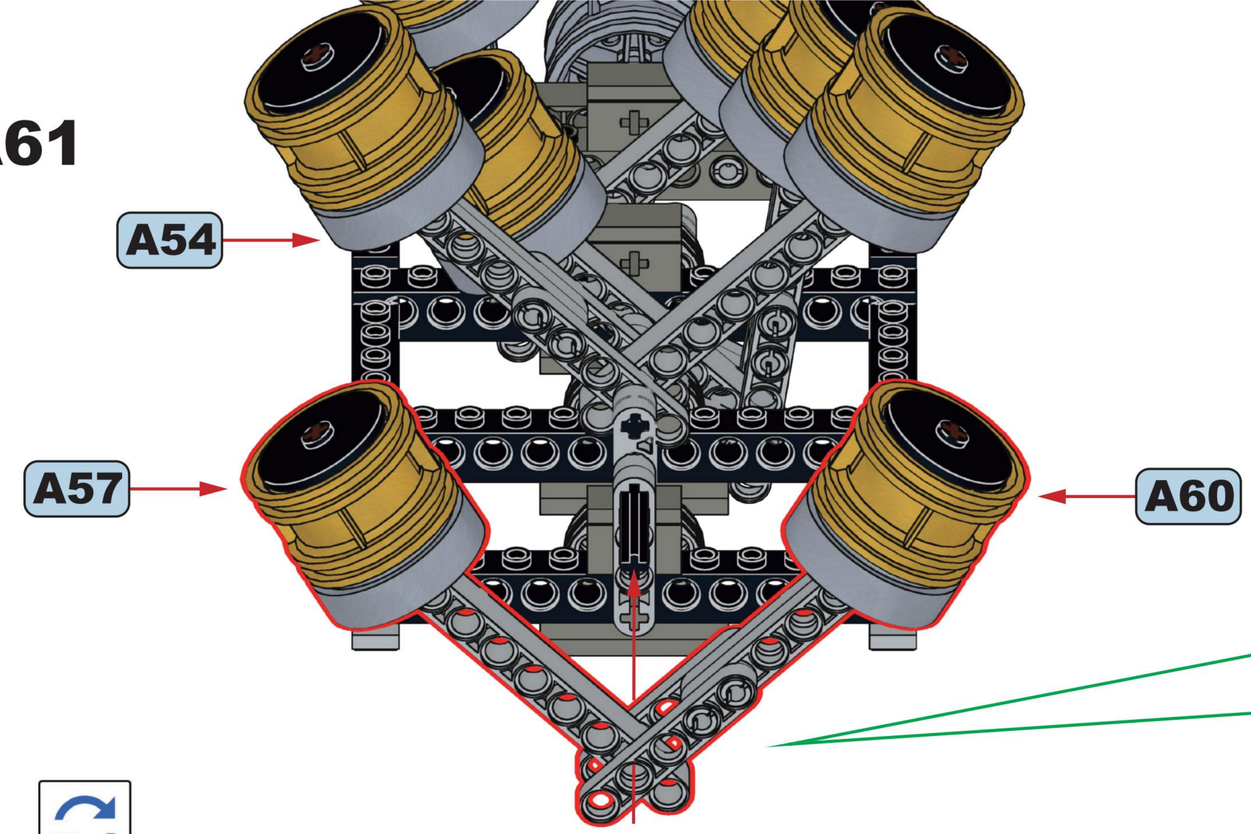

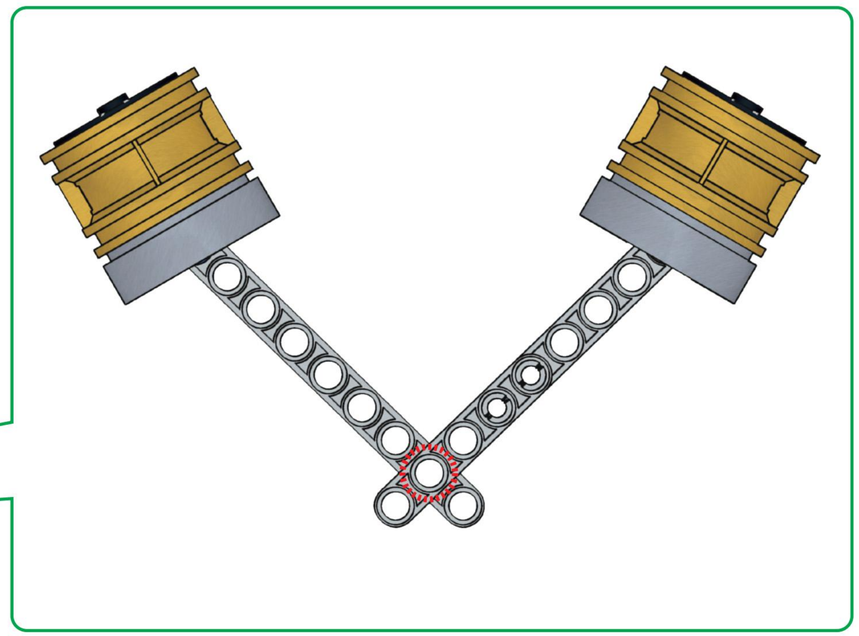

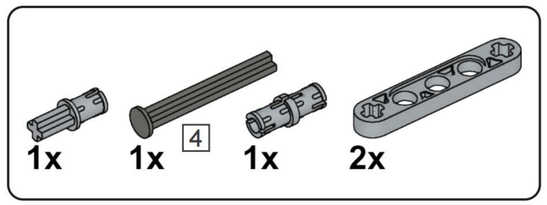

A62

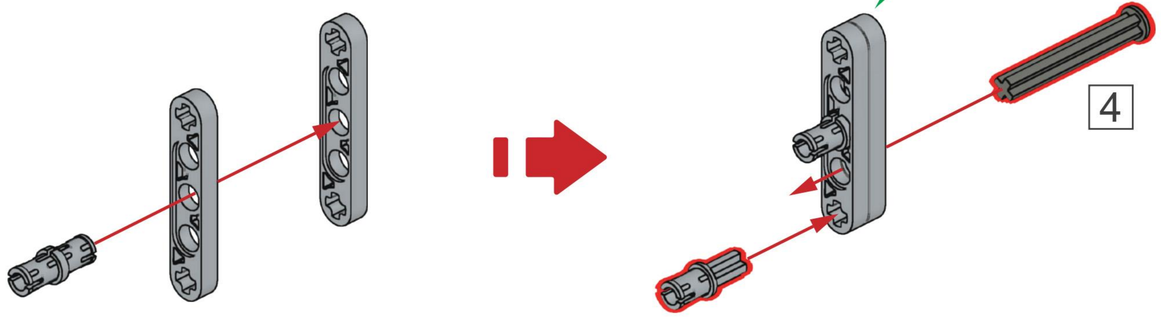

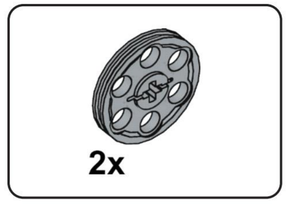

A63

A64

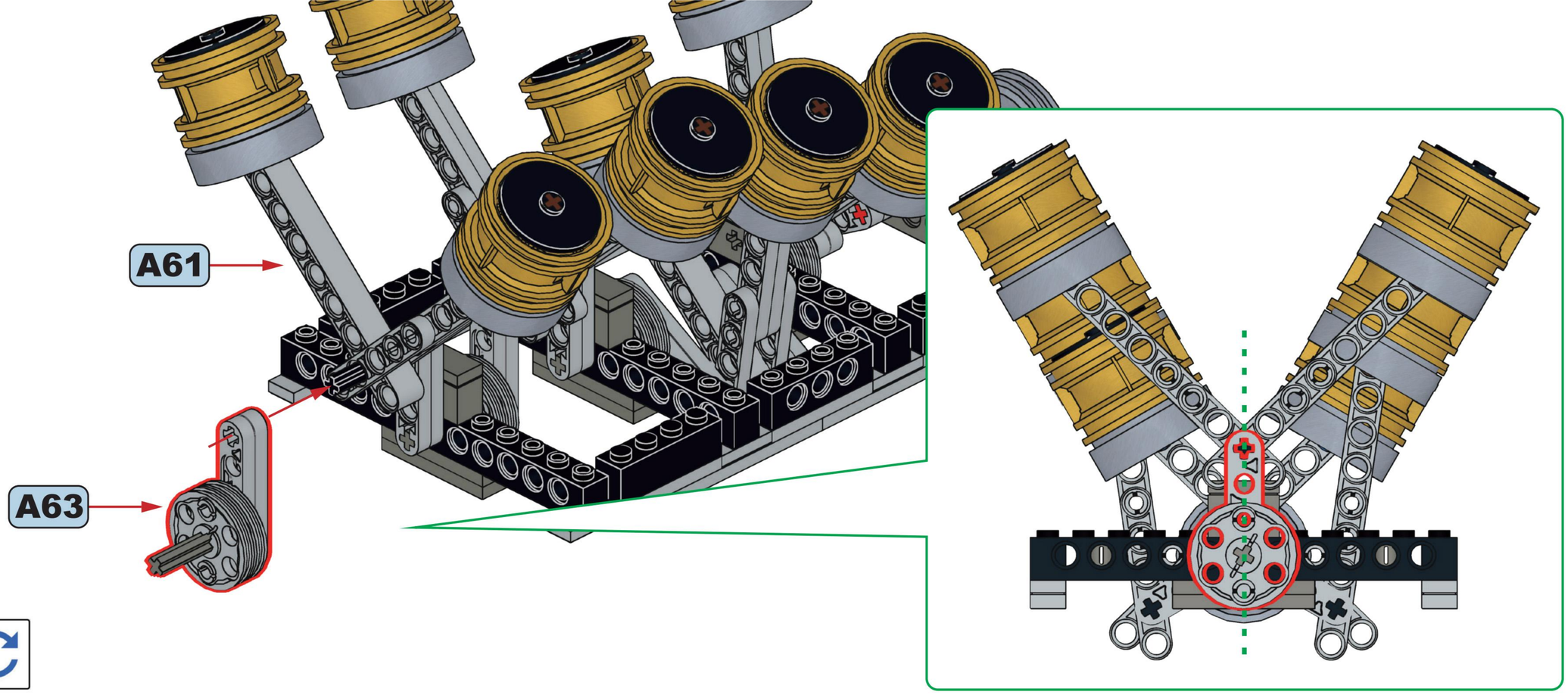

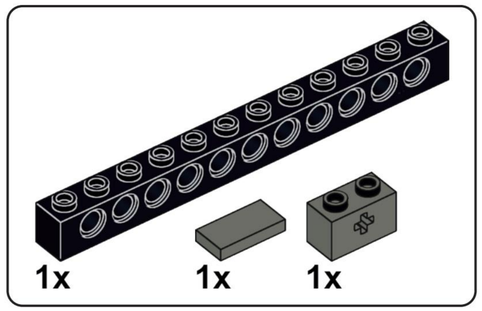

A65

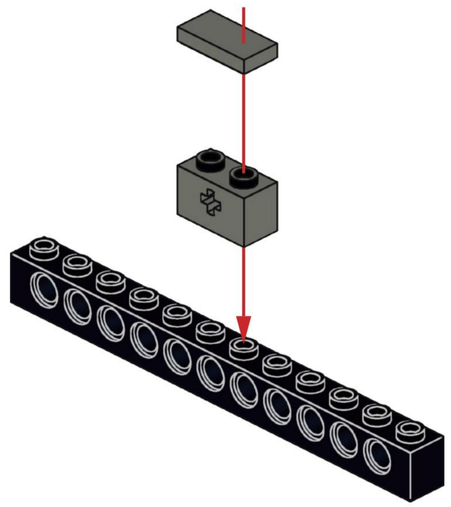

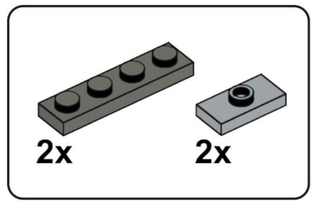

A66

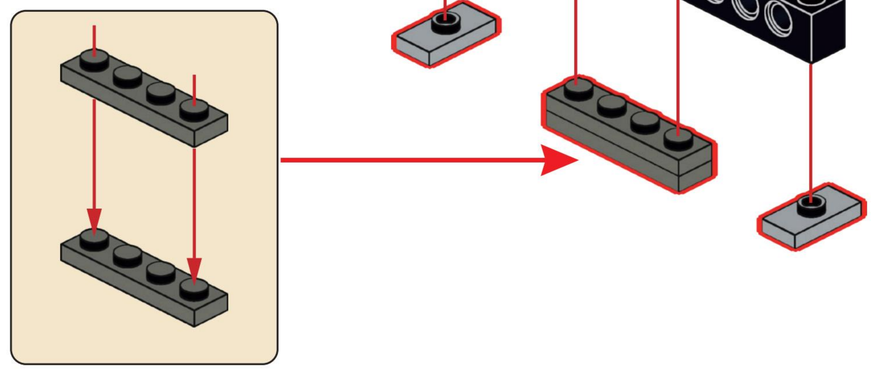

A67

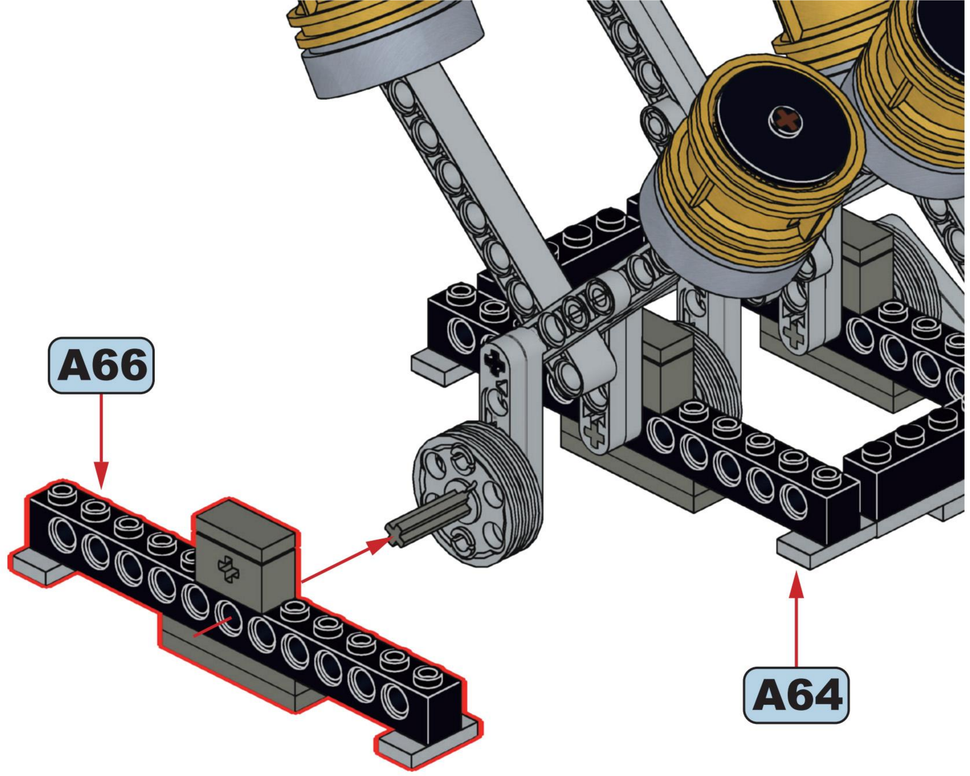

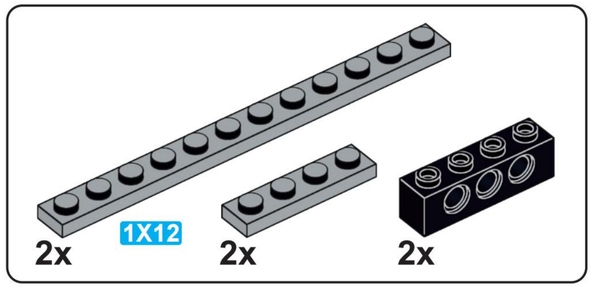

A68

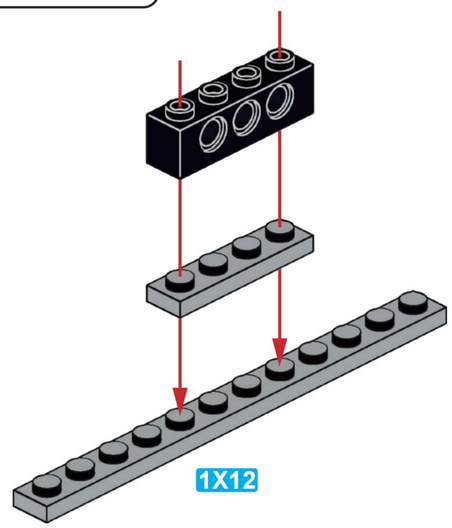

x2

A69

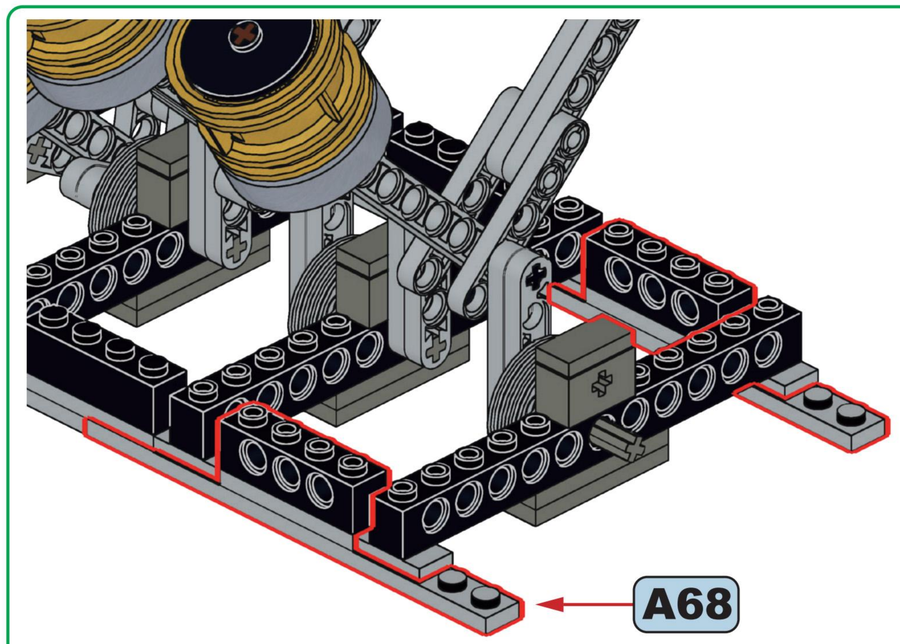

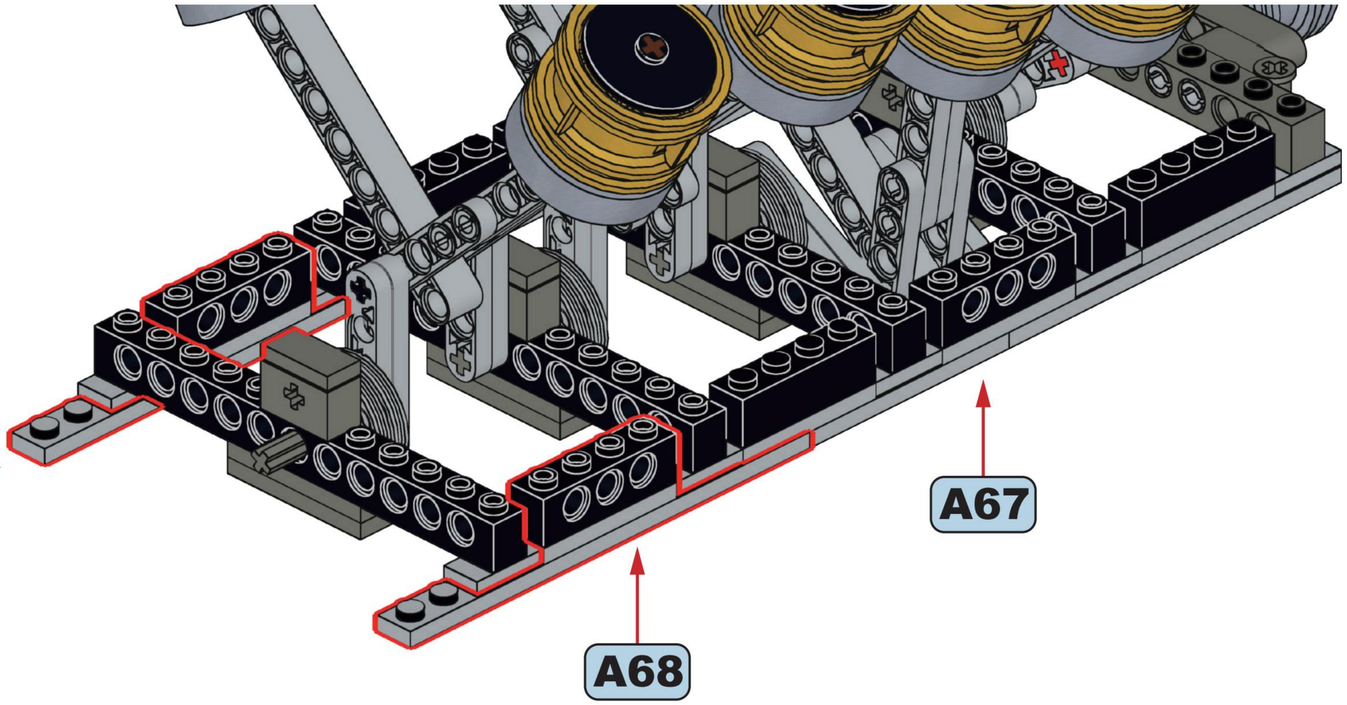

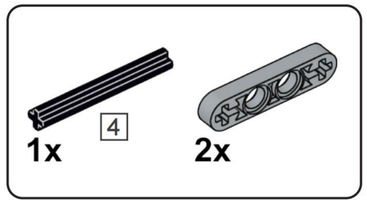

A70

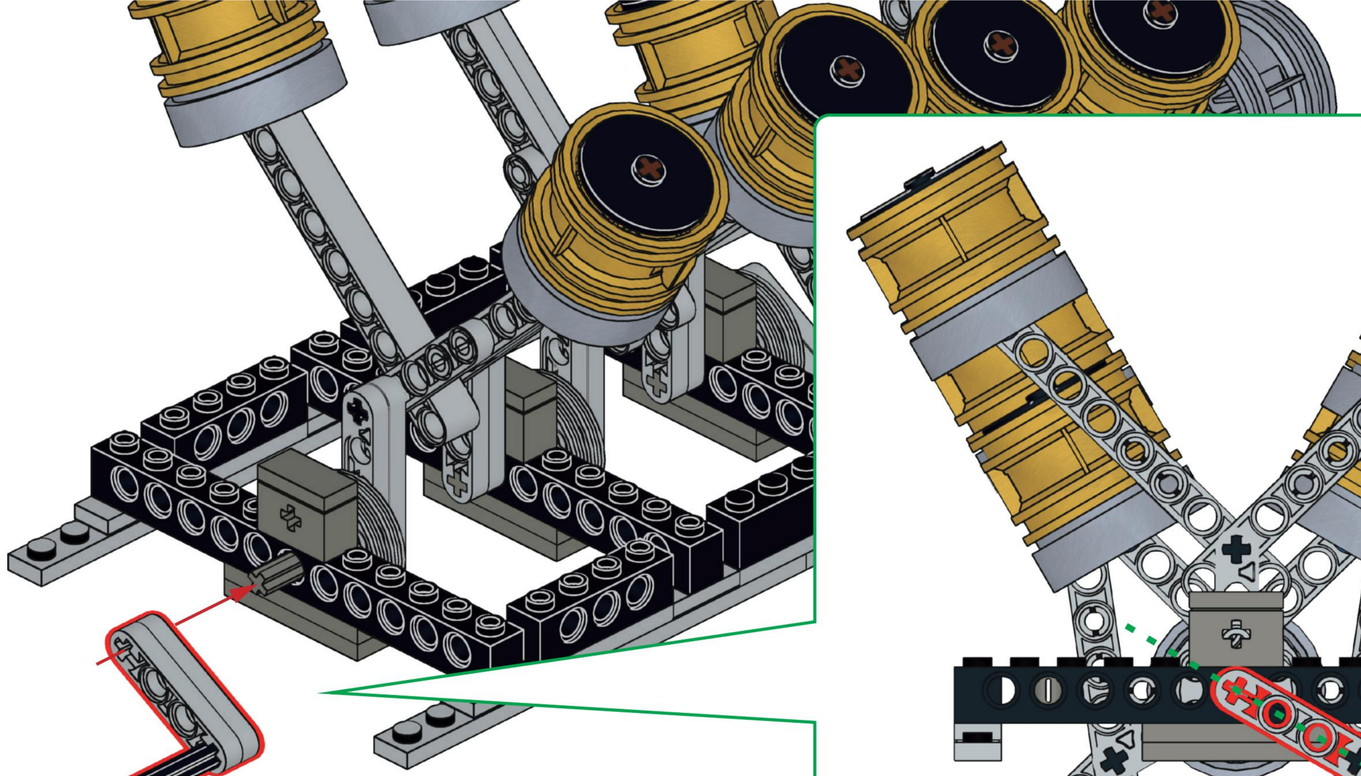

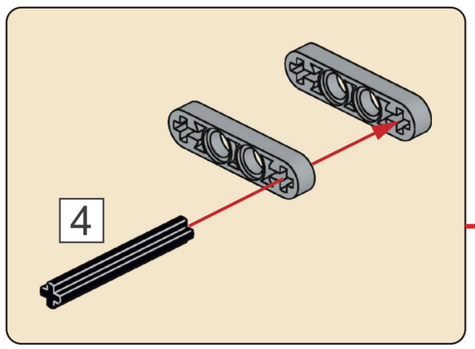

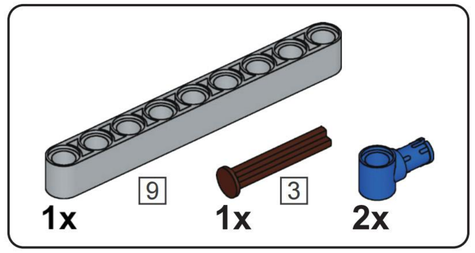



A71

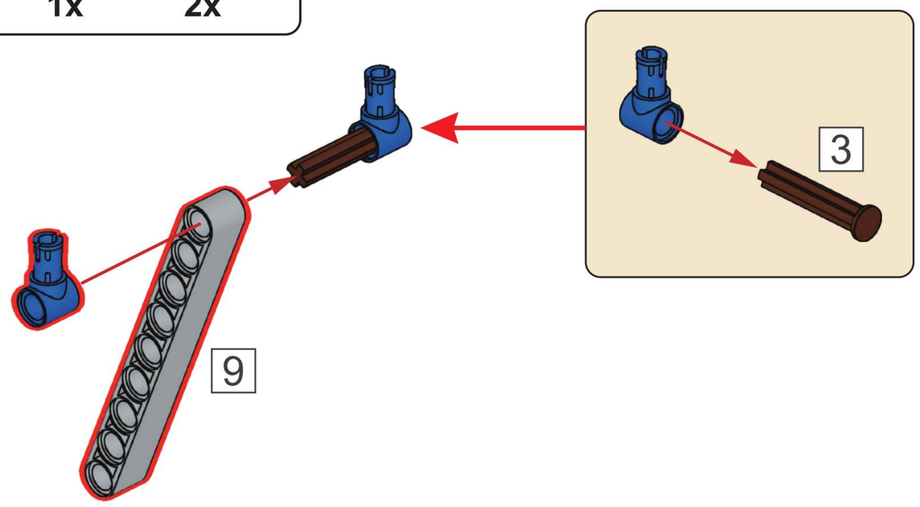

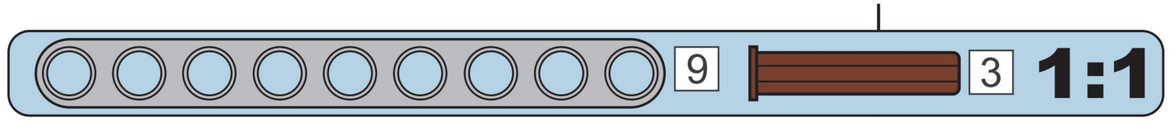

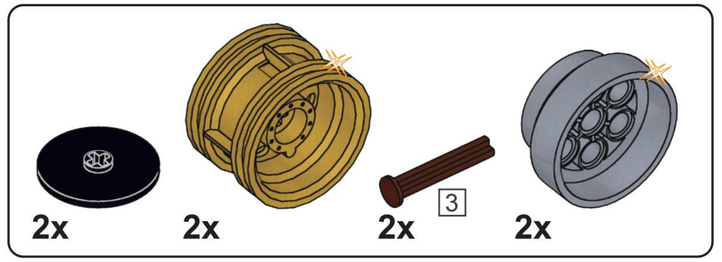

A72

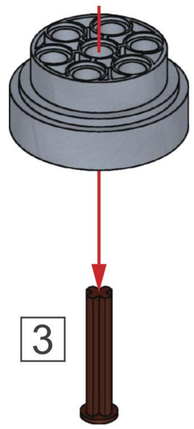

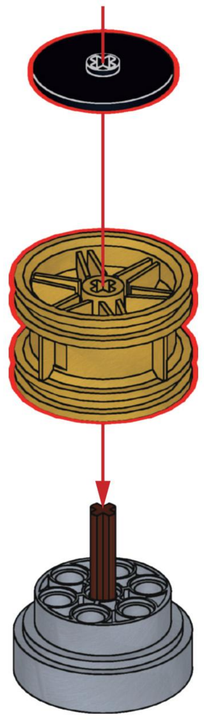

A73

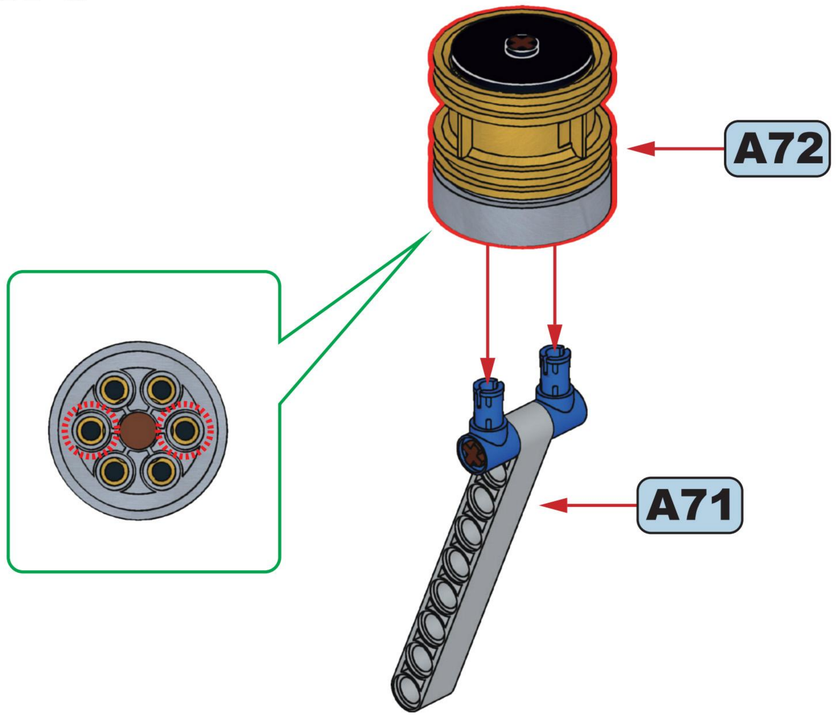

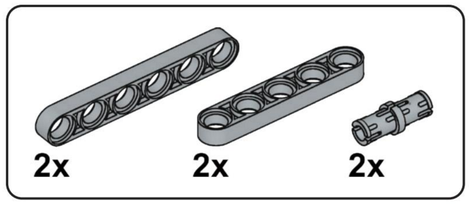

A74

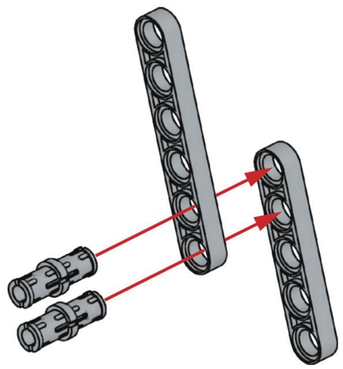

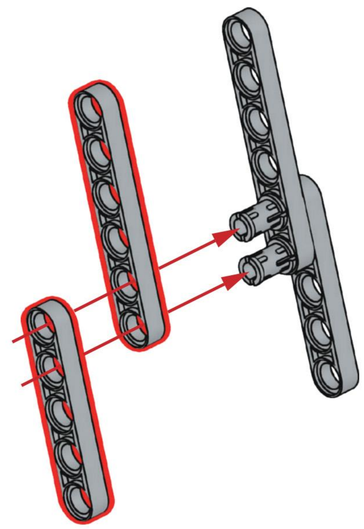

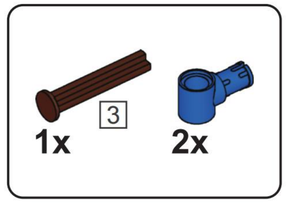

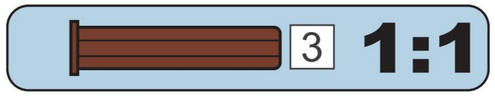

A75

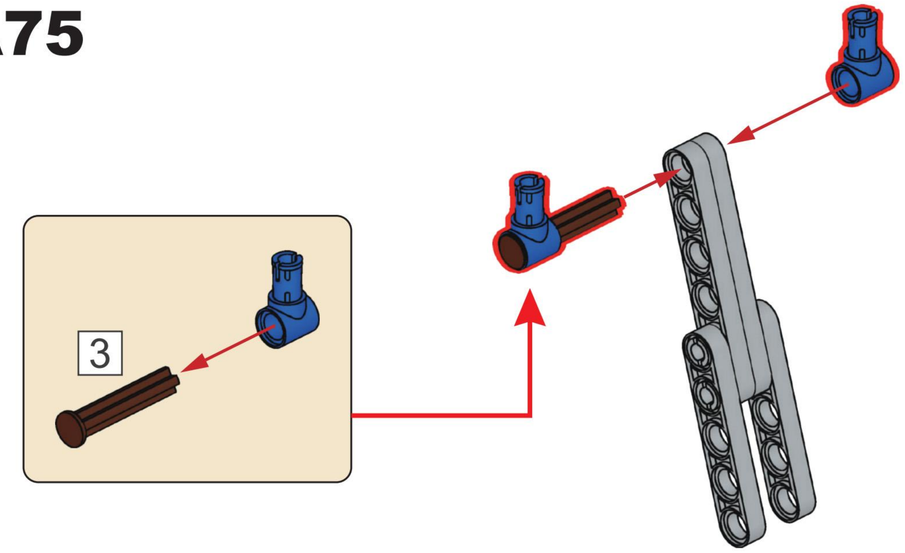

A76

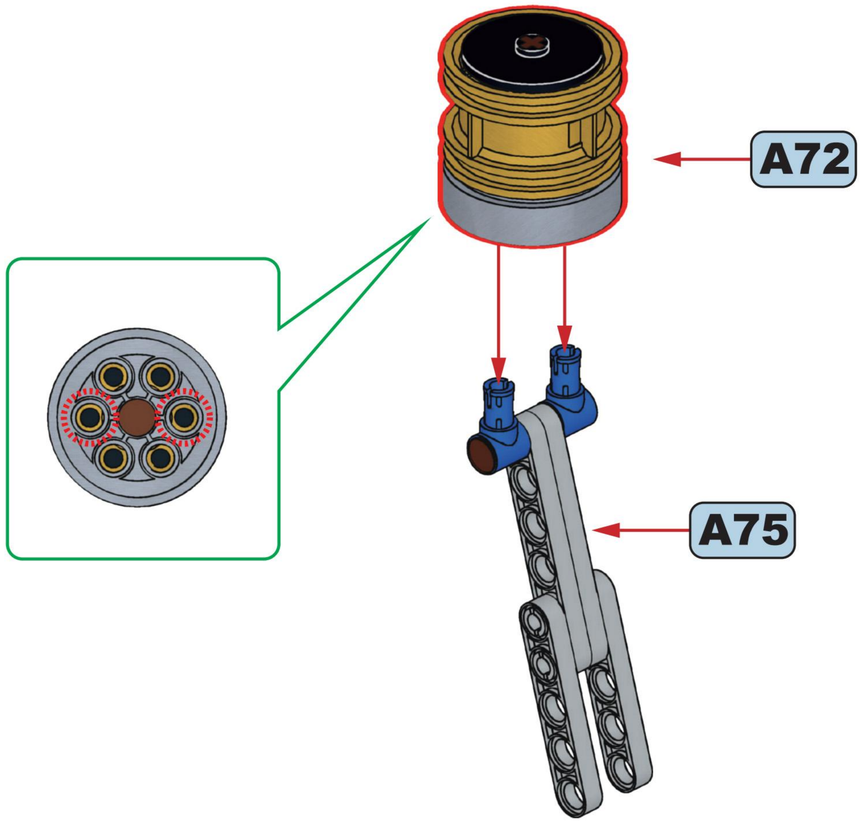

A77

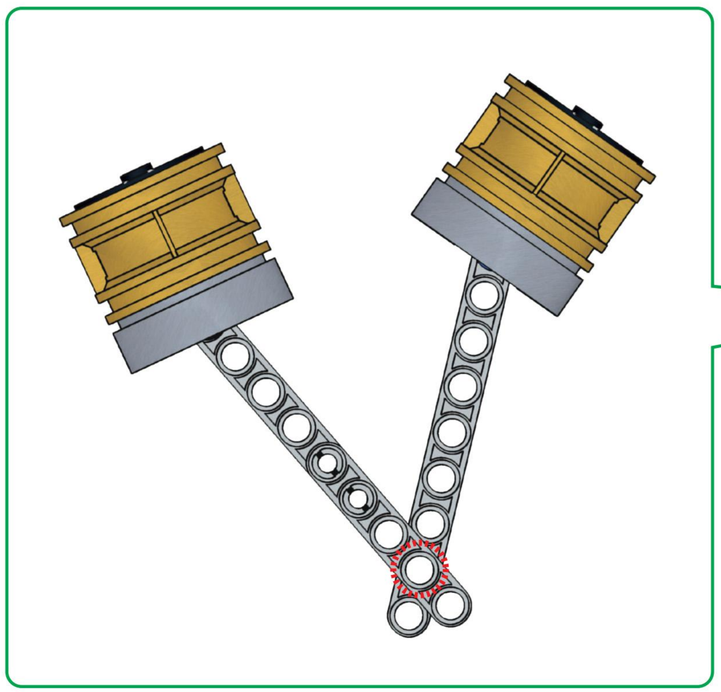

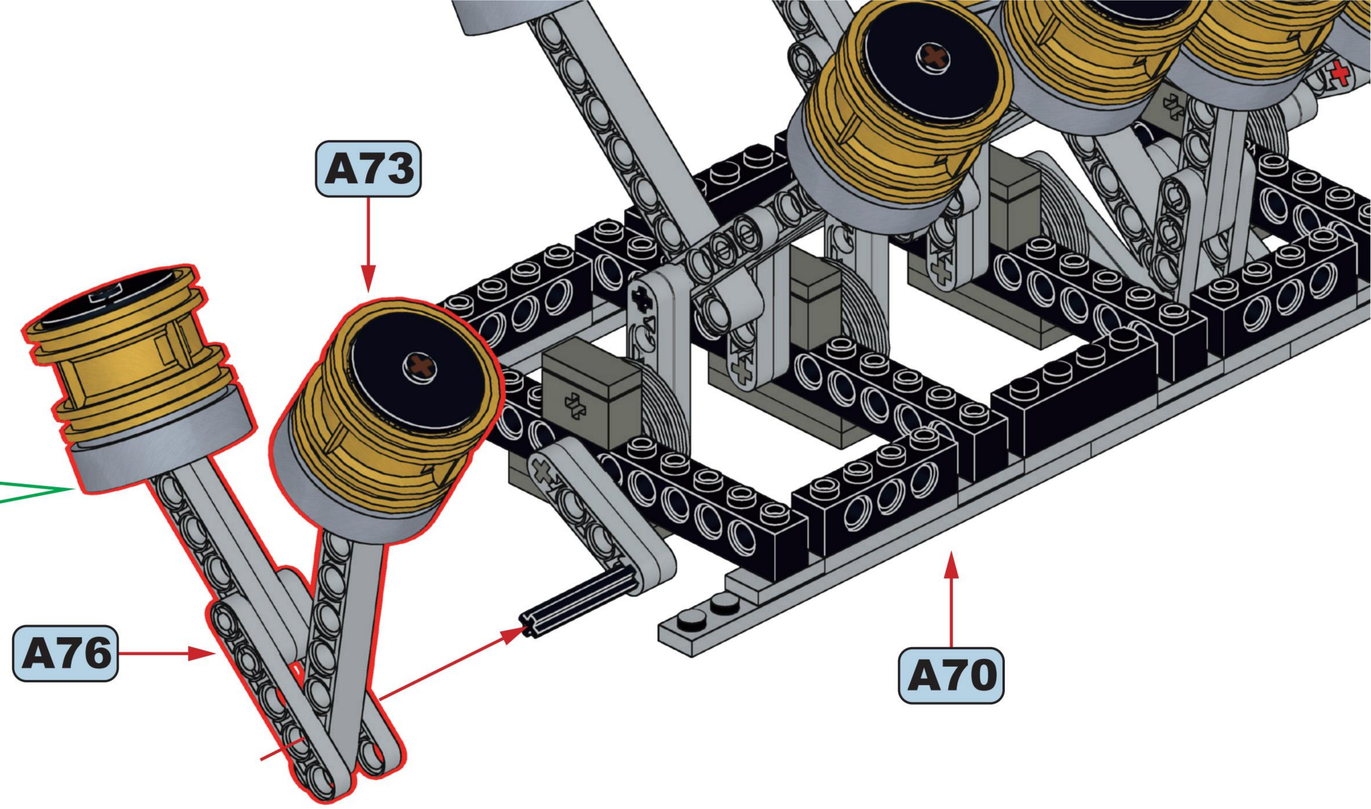

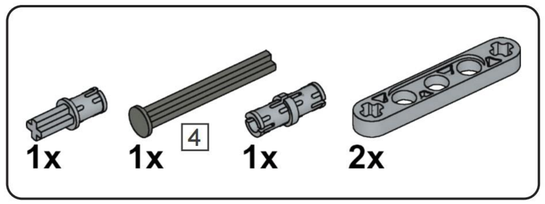

A78

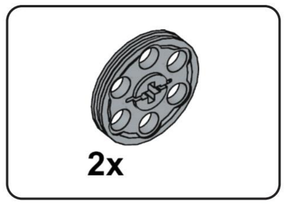

A79

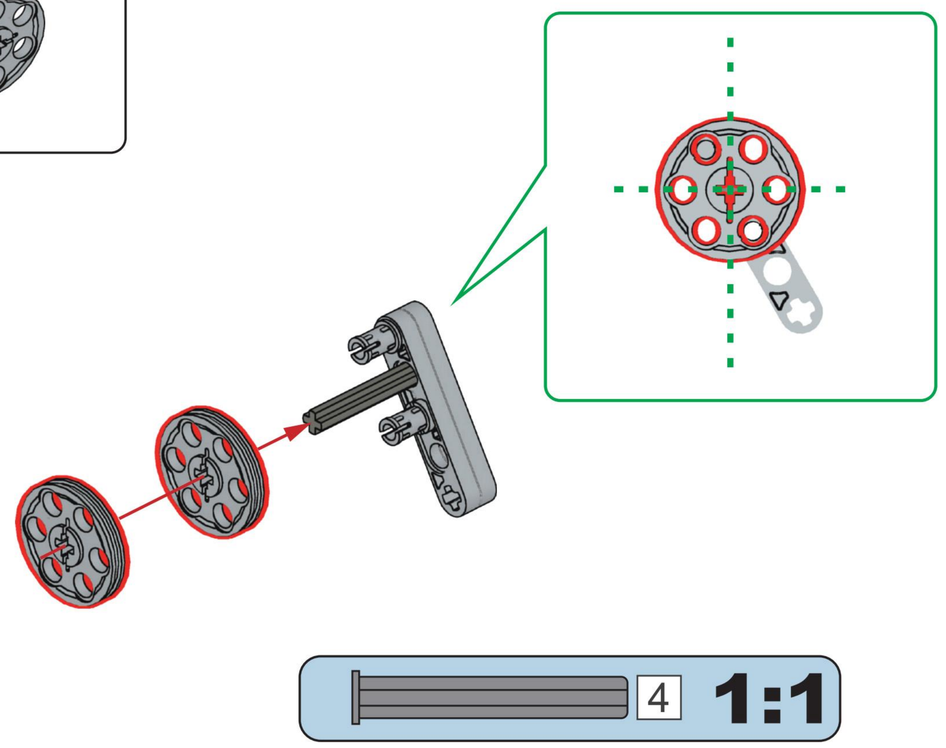

A80

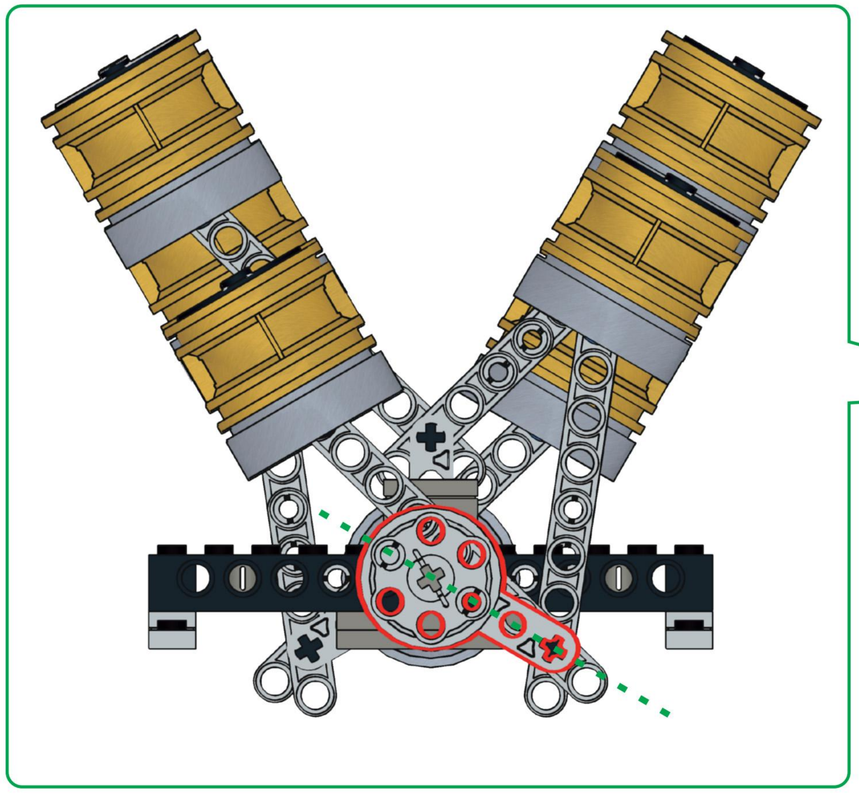

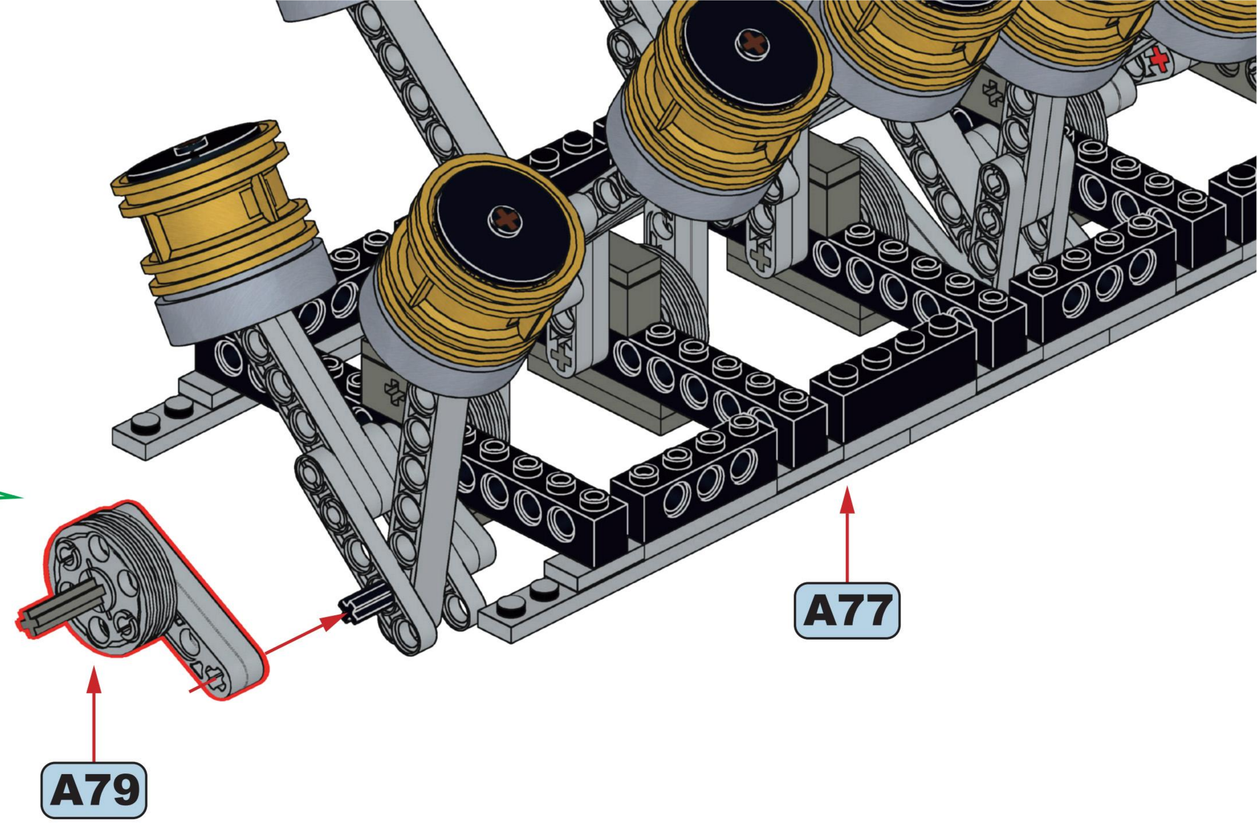

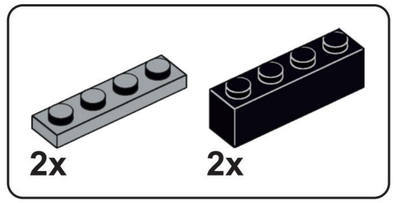

A81

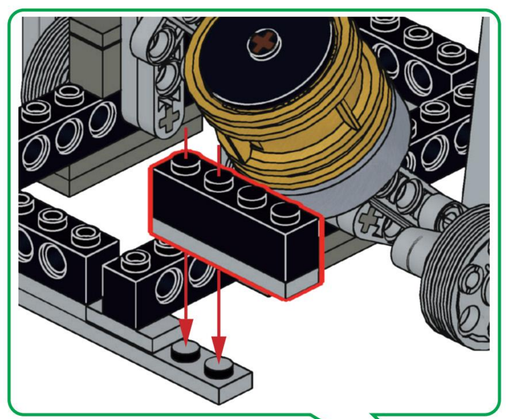

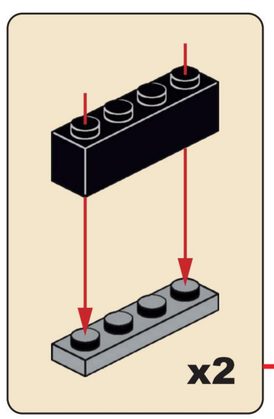

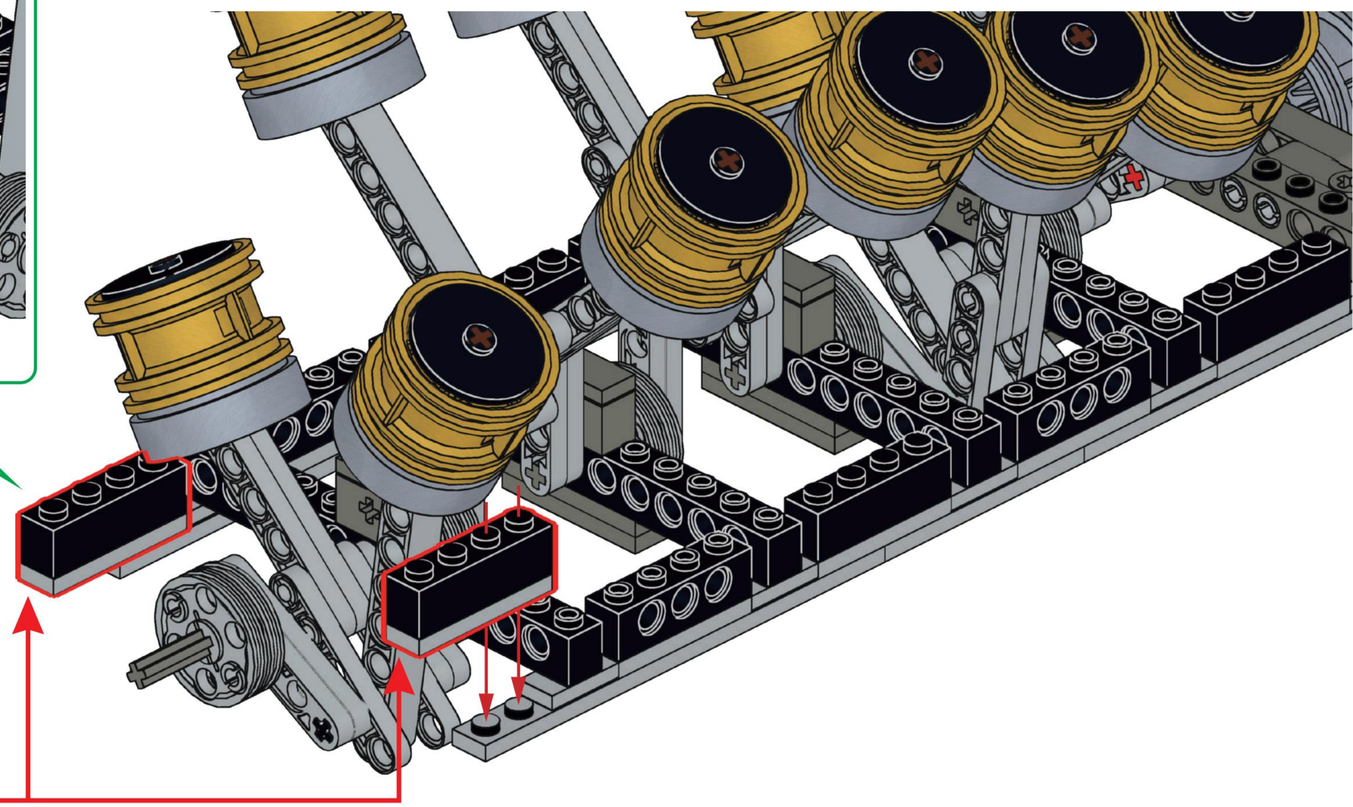

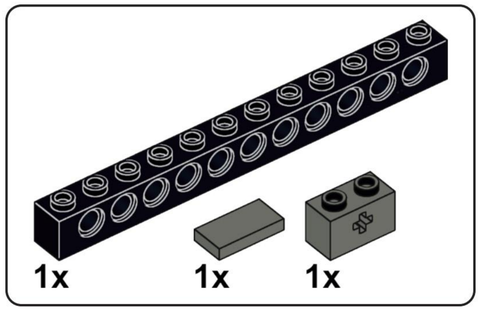

A82

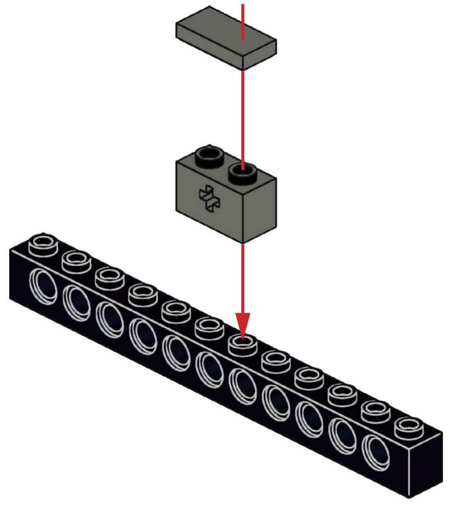

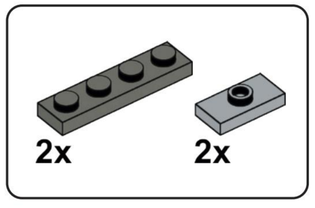

A83

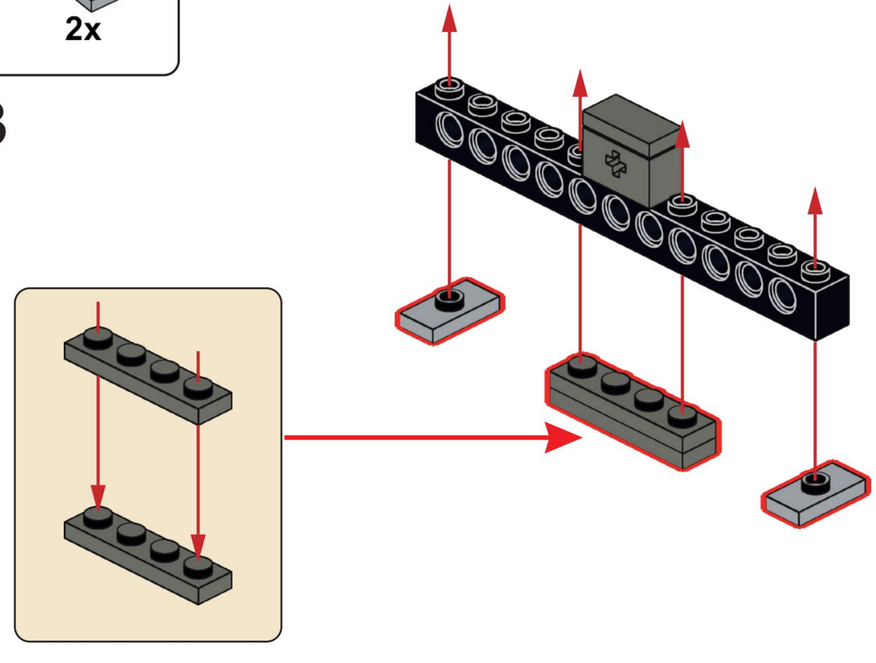

A84

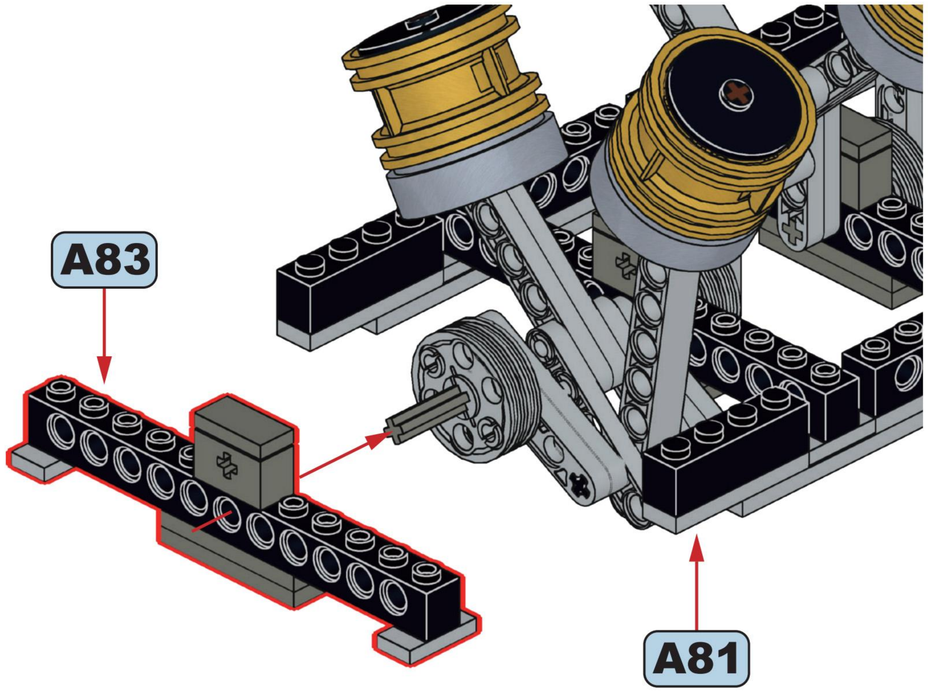

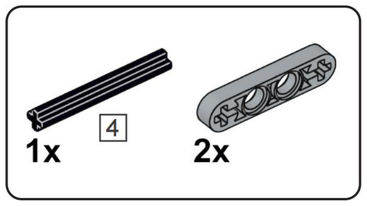

A85

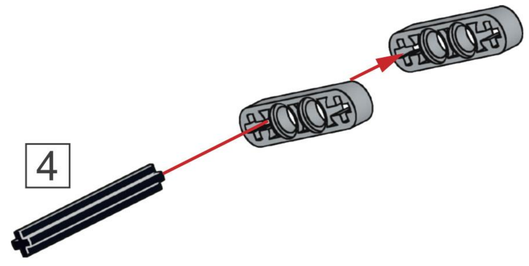

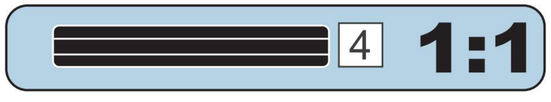

A86

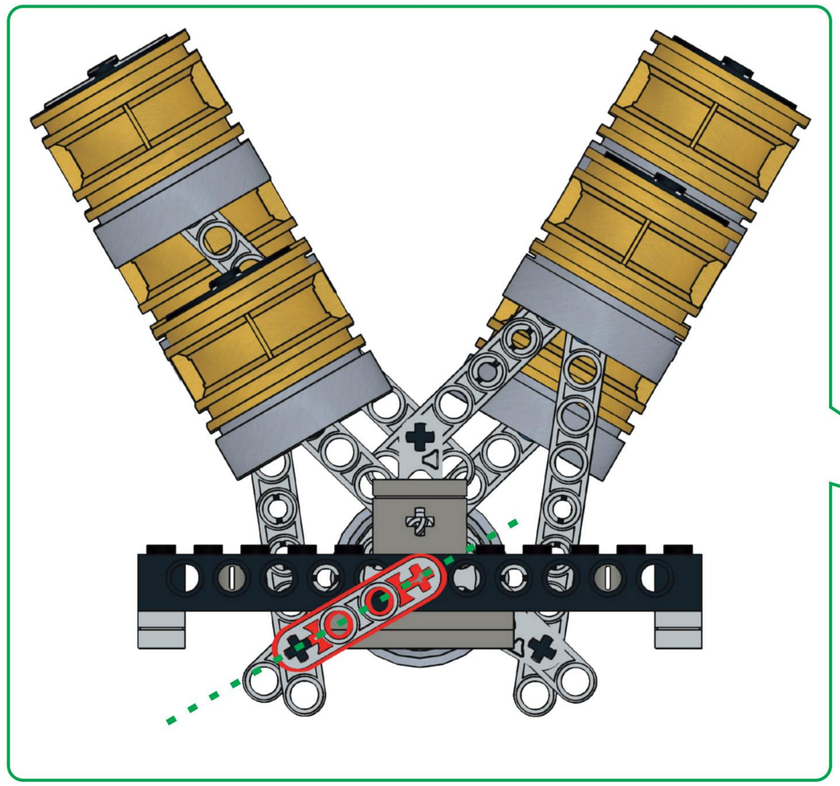

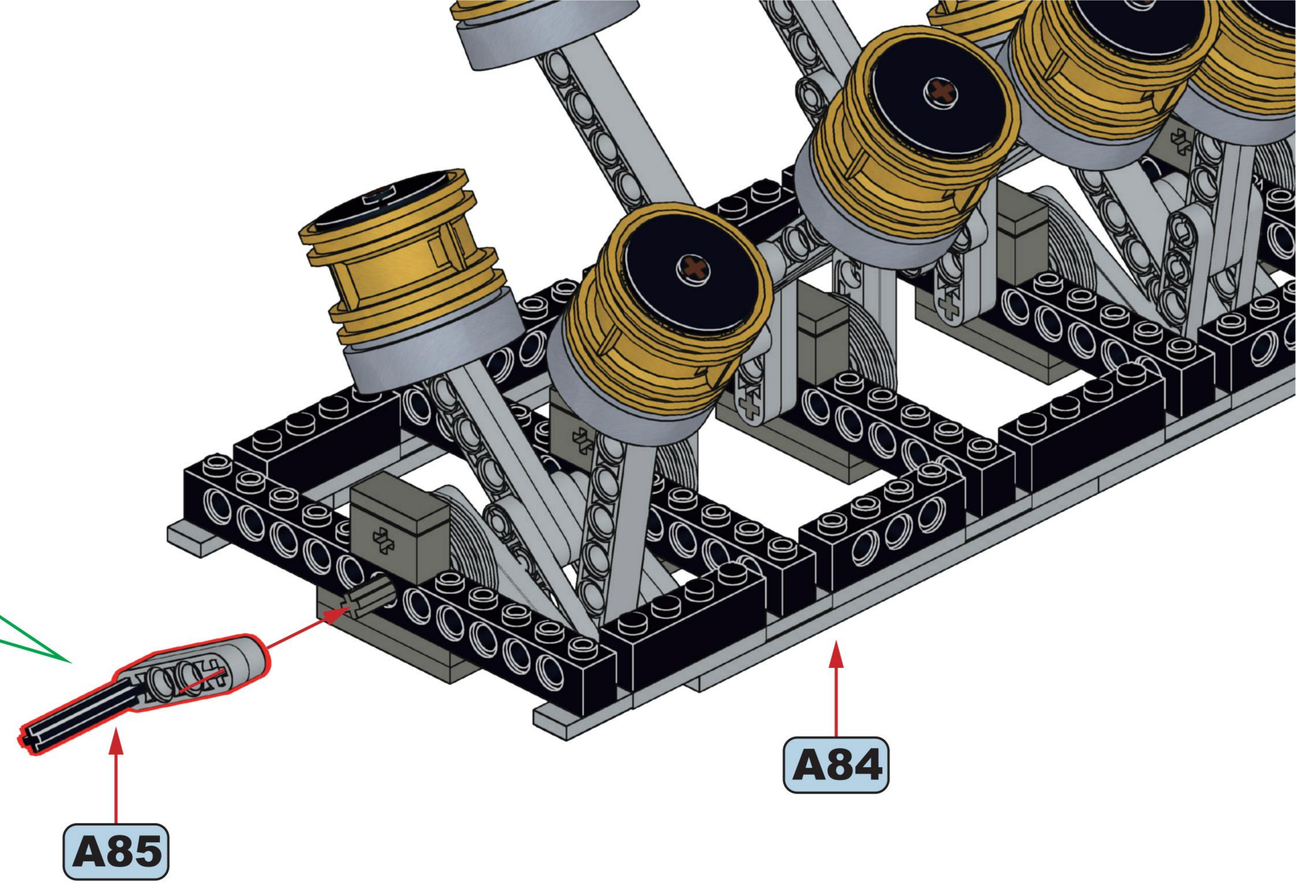

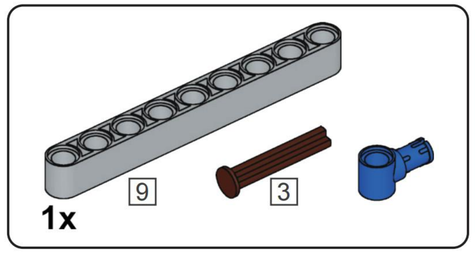

A87

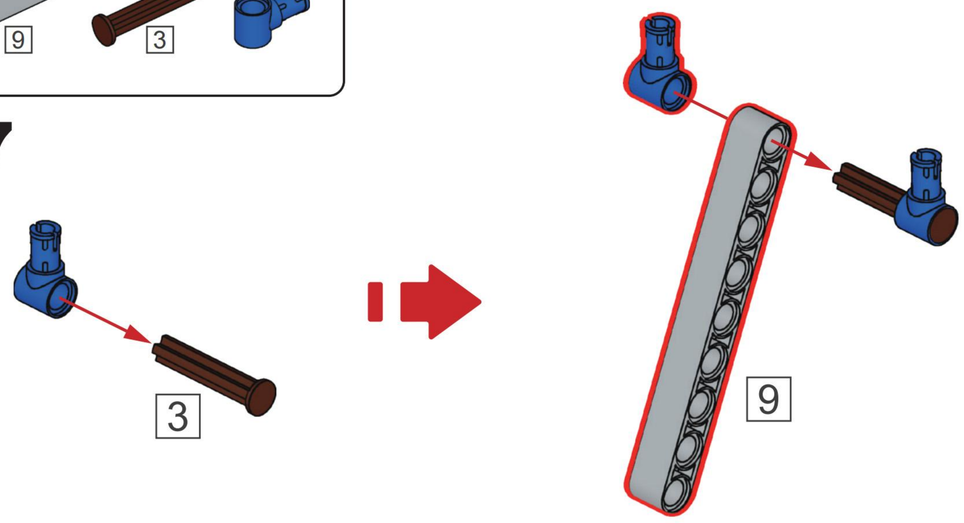

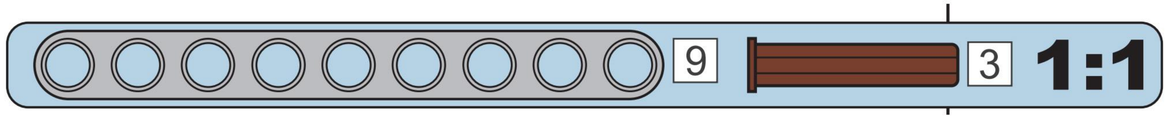

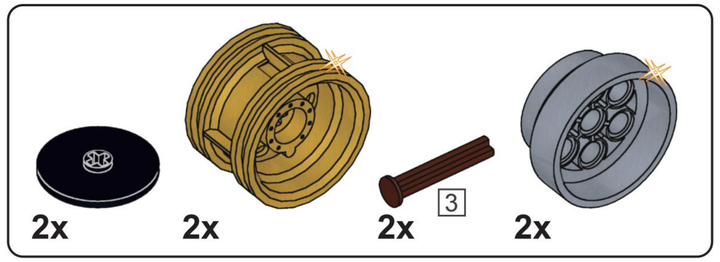

A88

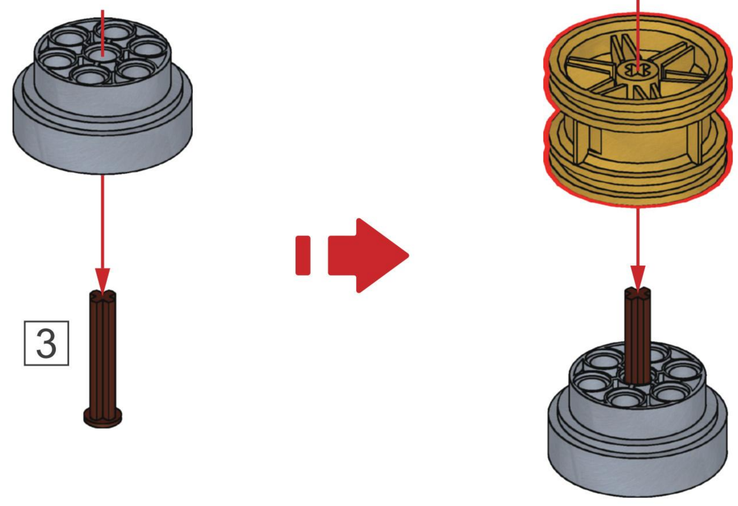

A89

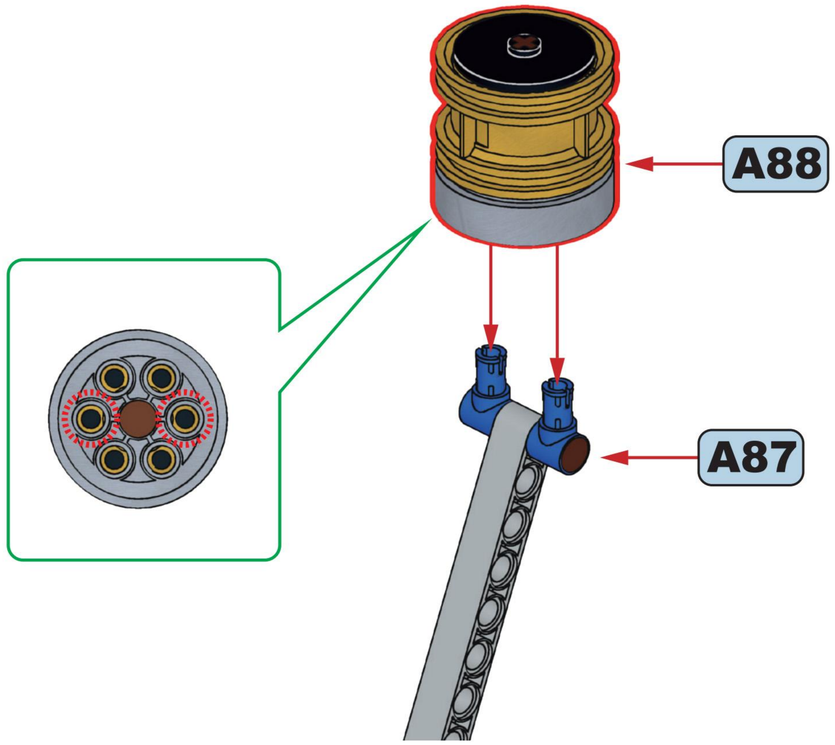

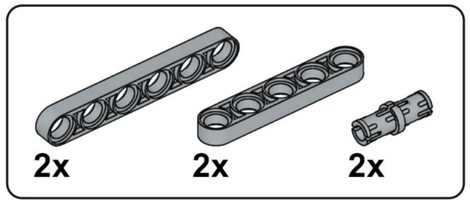

A90

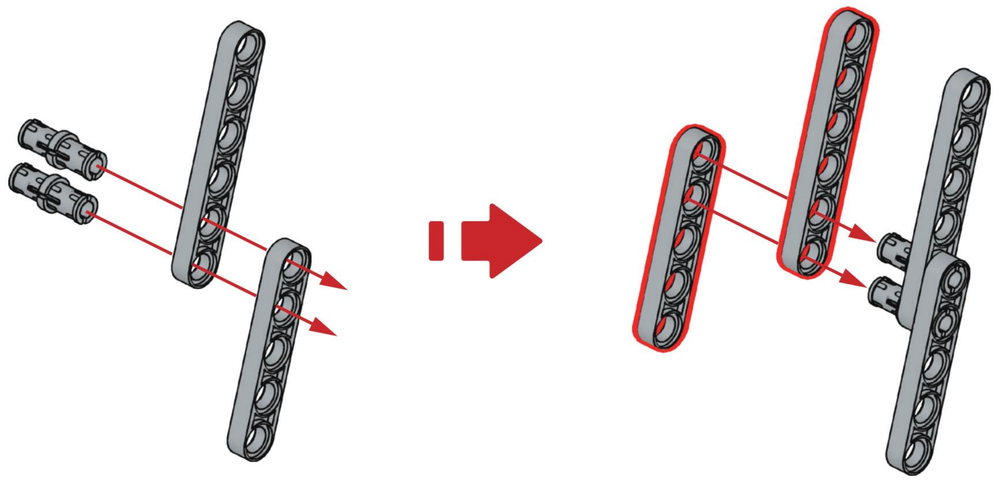

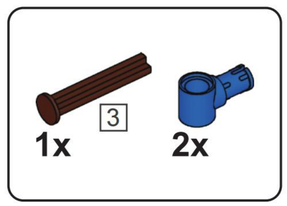

A91

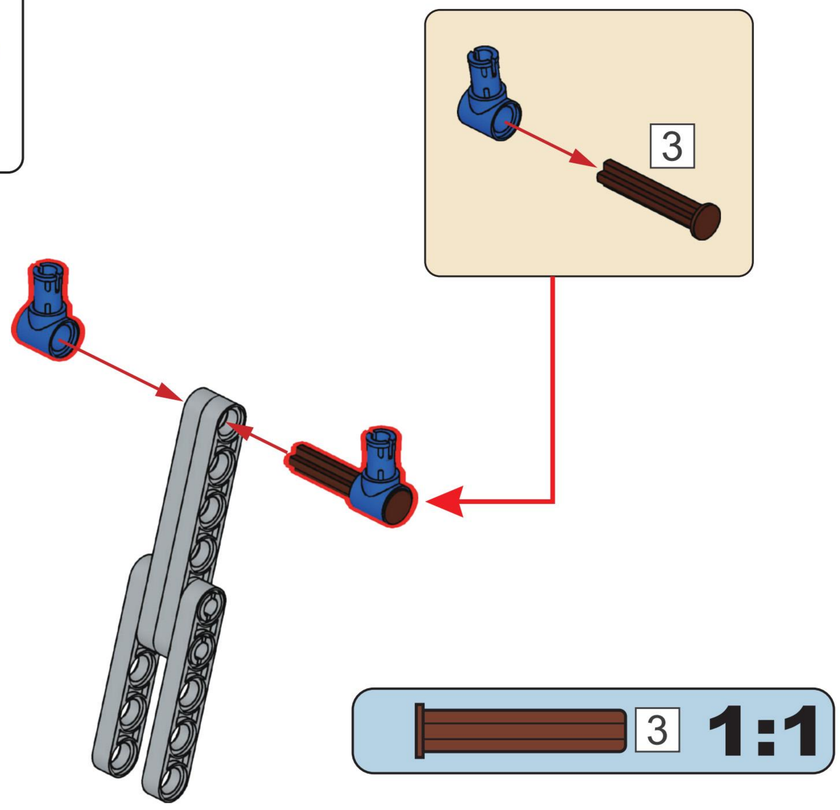

A92

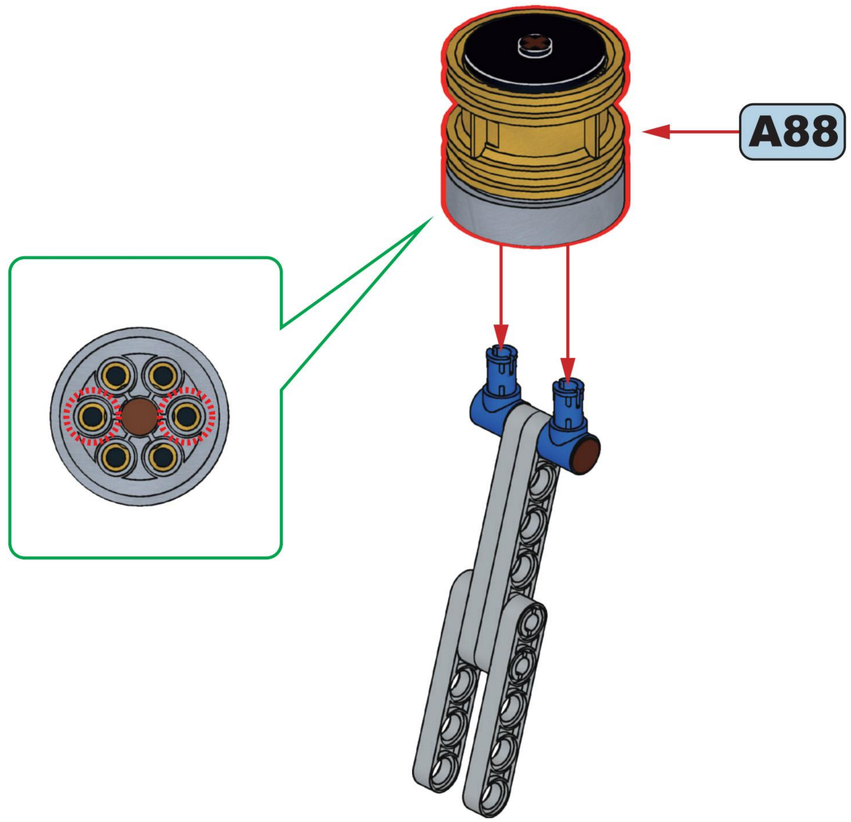

A93

A89

A92

A86

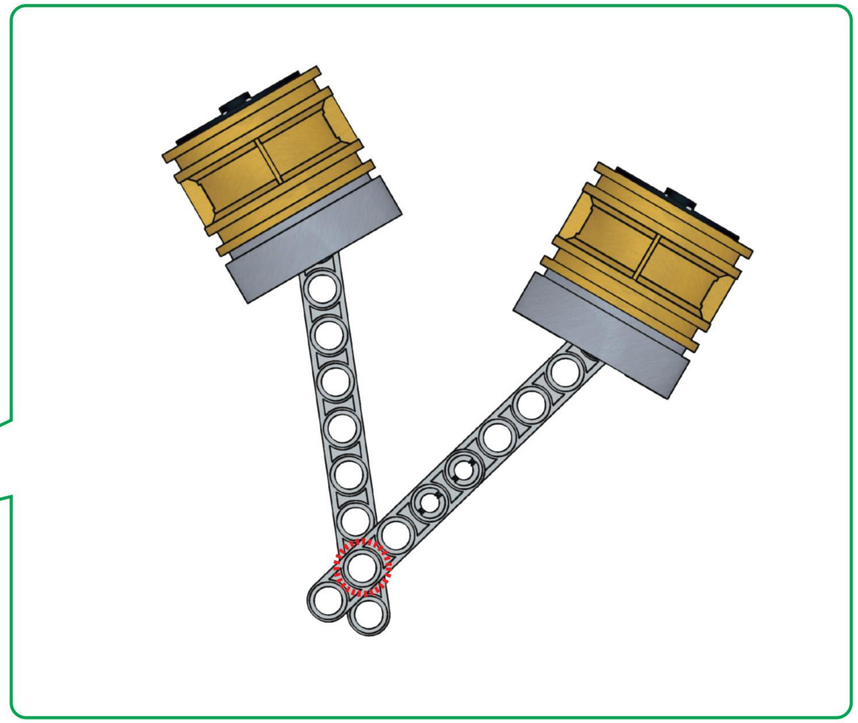

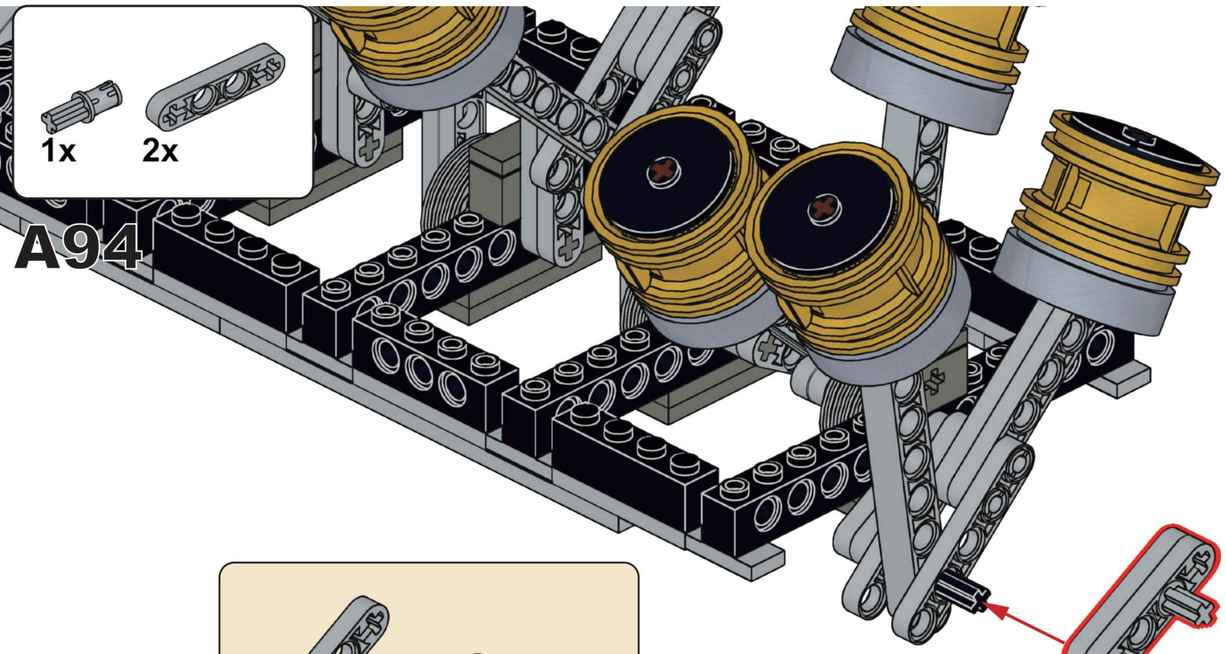

A94

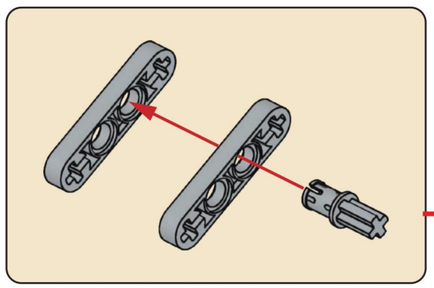

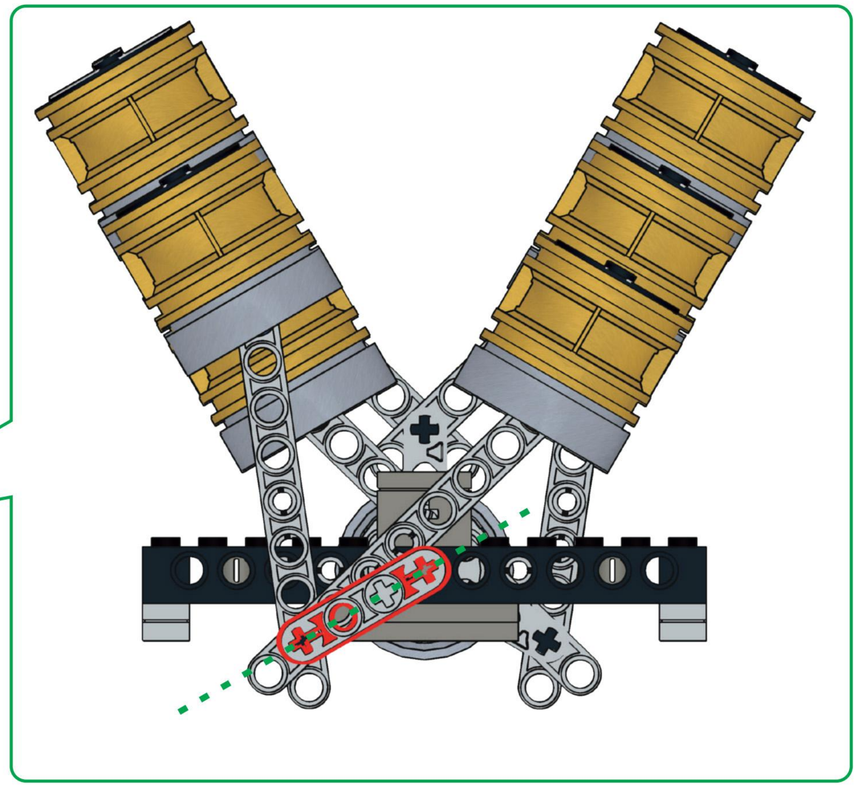

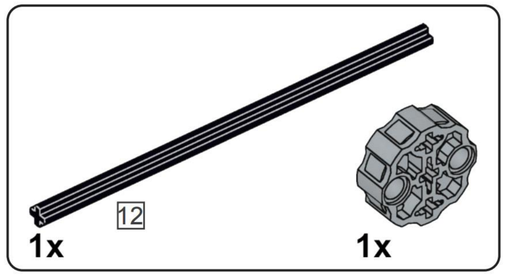

A95

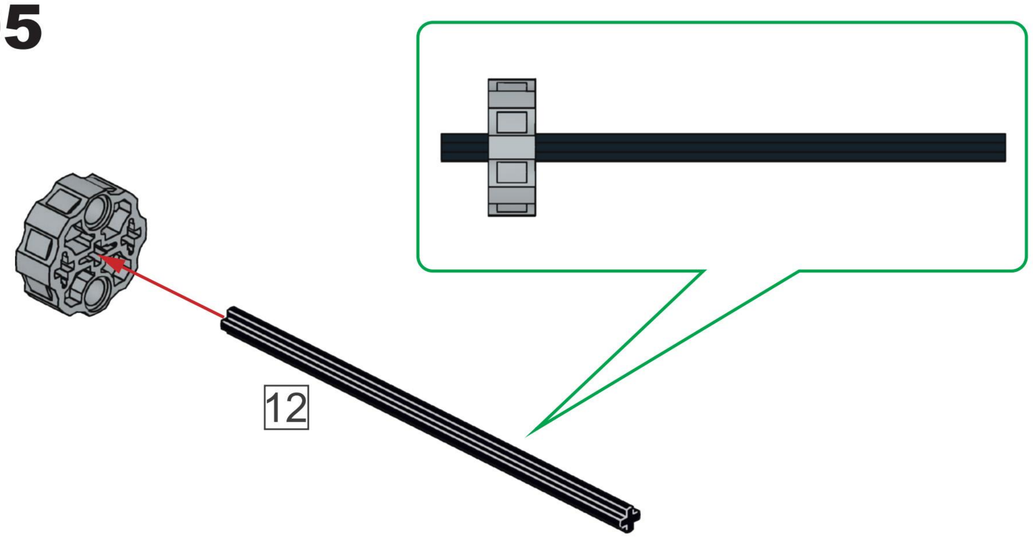

A96

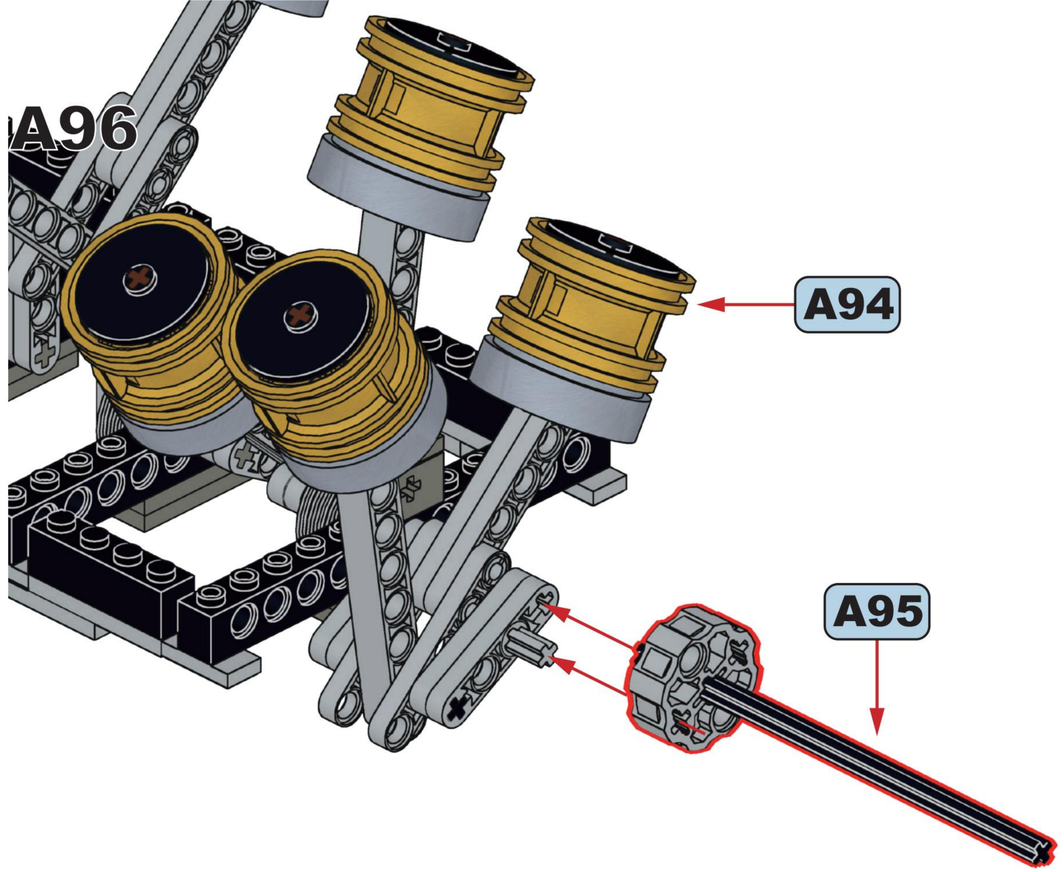

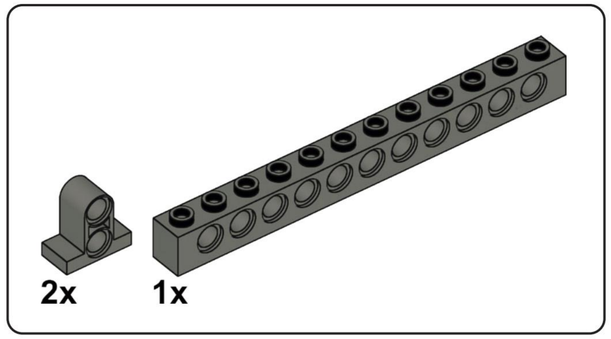

A97

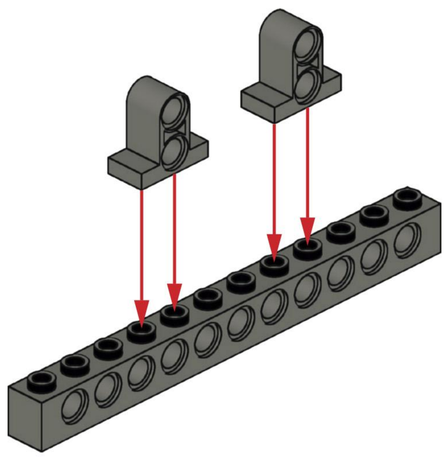

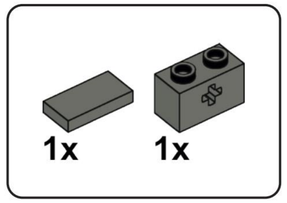

A98

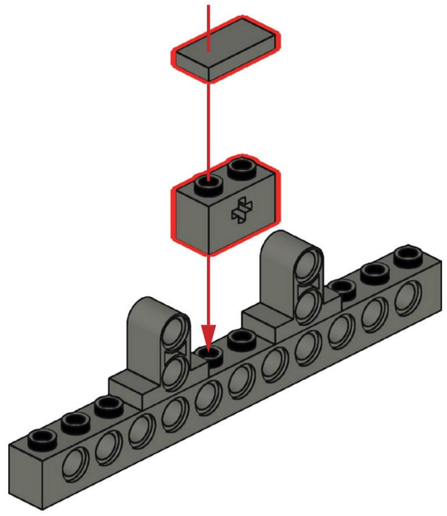



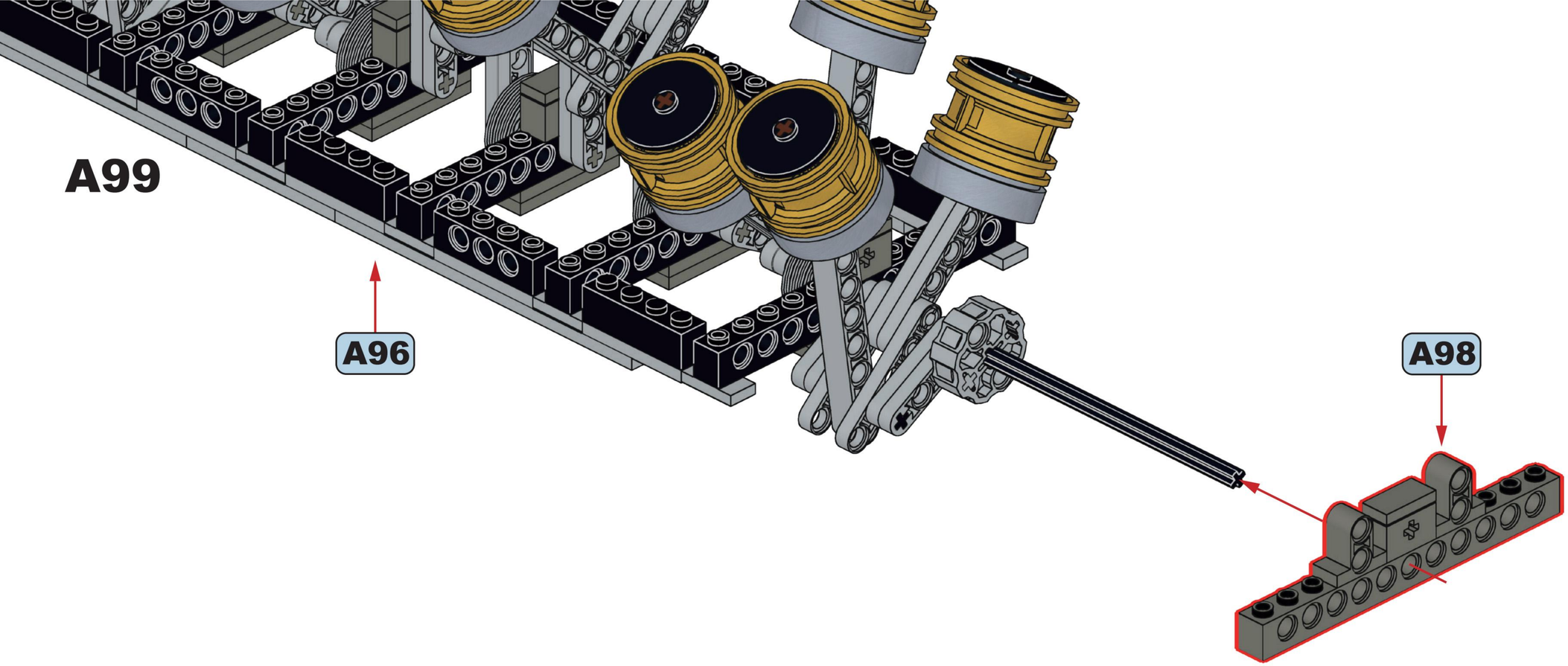

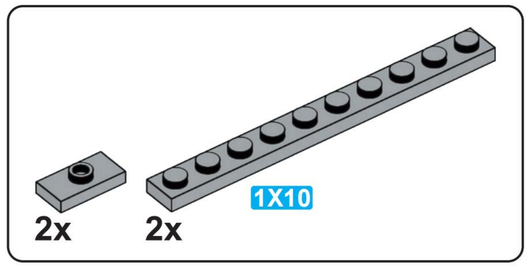

A100

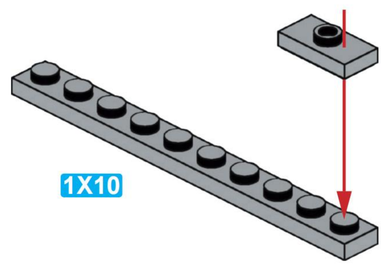

x2

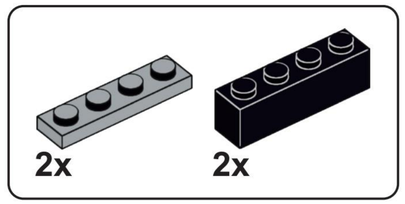

A101

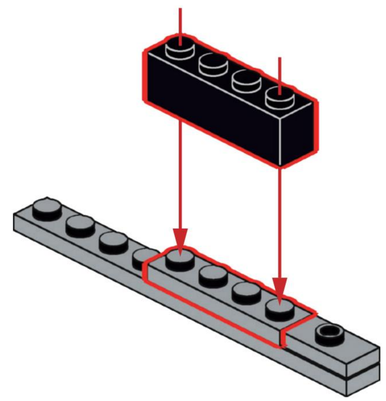

x2

A102

A99

A101

A101

2x

6x

1X6

A103

1X6

1X6

1X6

1X6

1X6

1X6

8x

A104

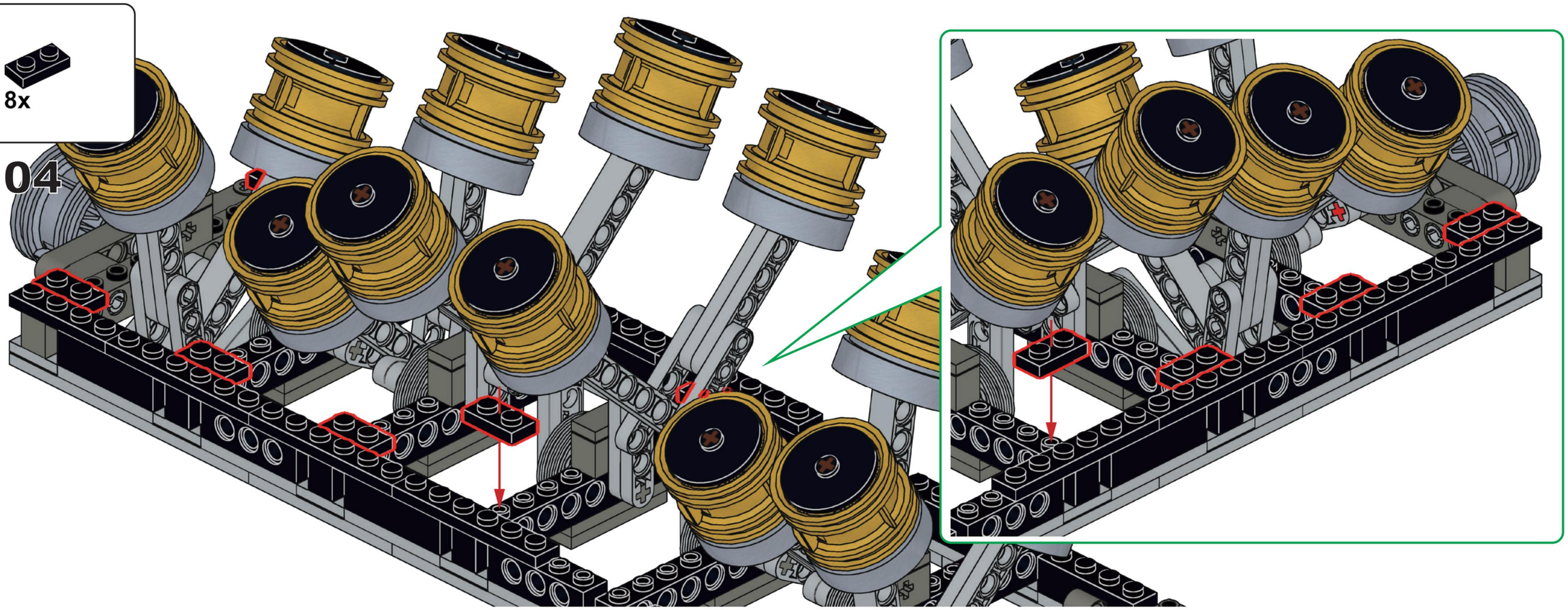

4x 4x

A105

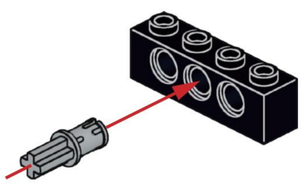

x4

2x 2x

A106

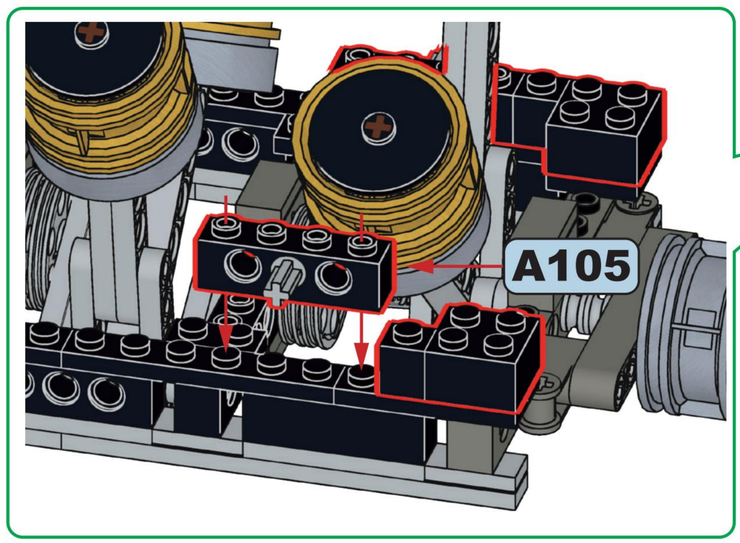

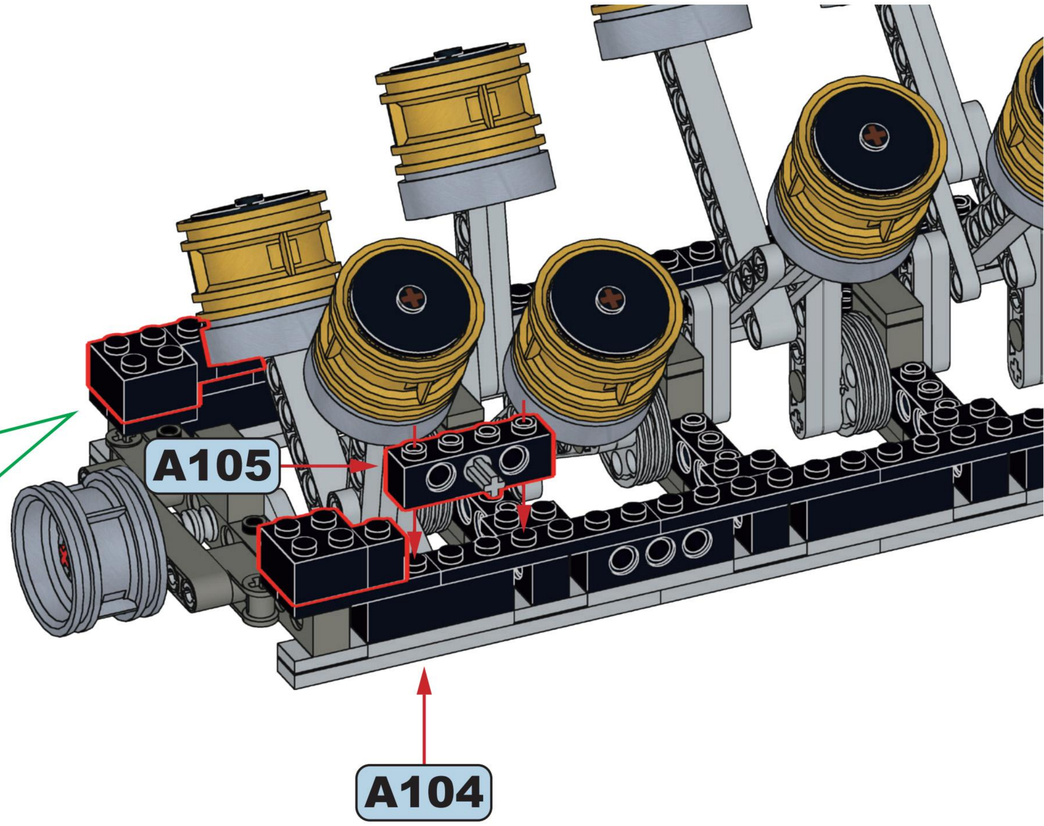

4x 4x

A107

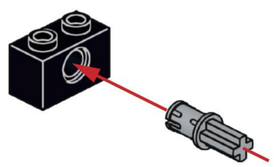

x4

2x

A108

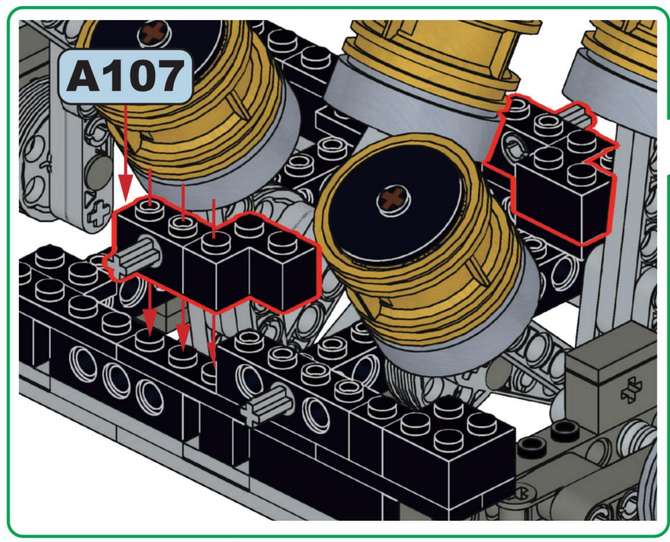

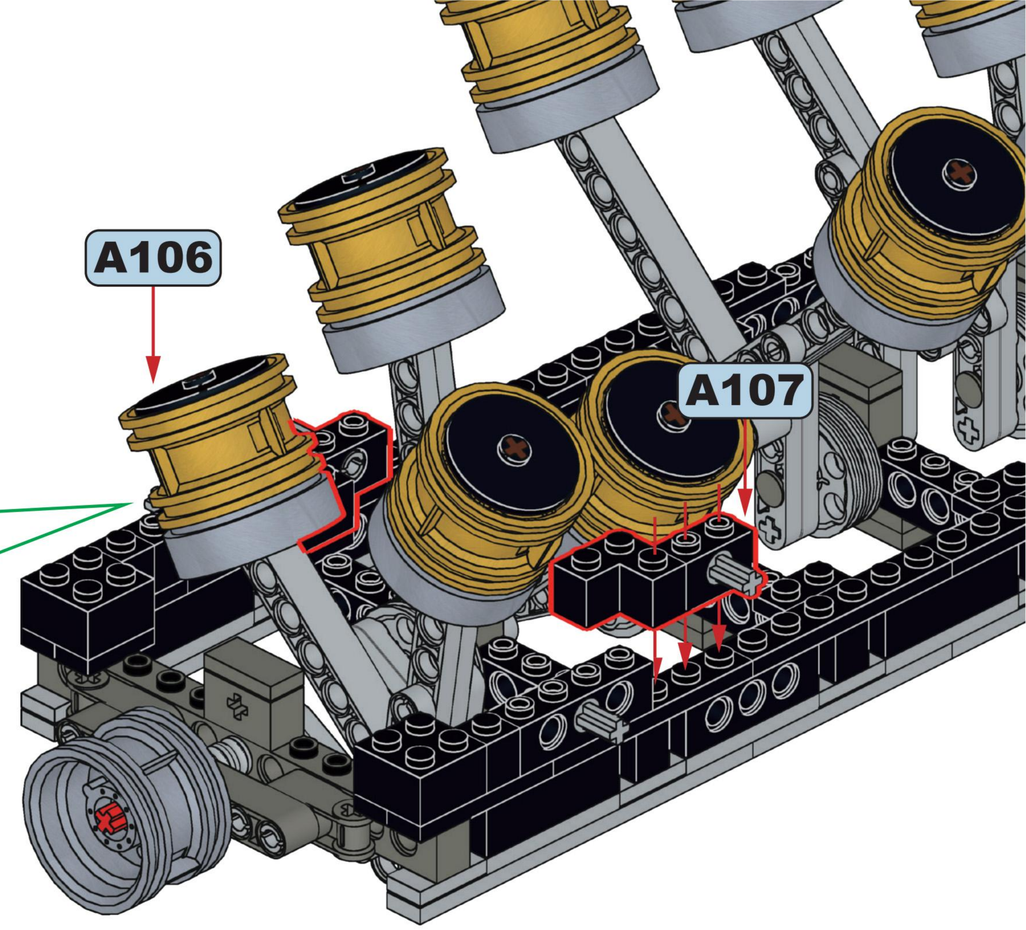

4x 2x

A109

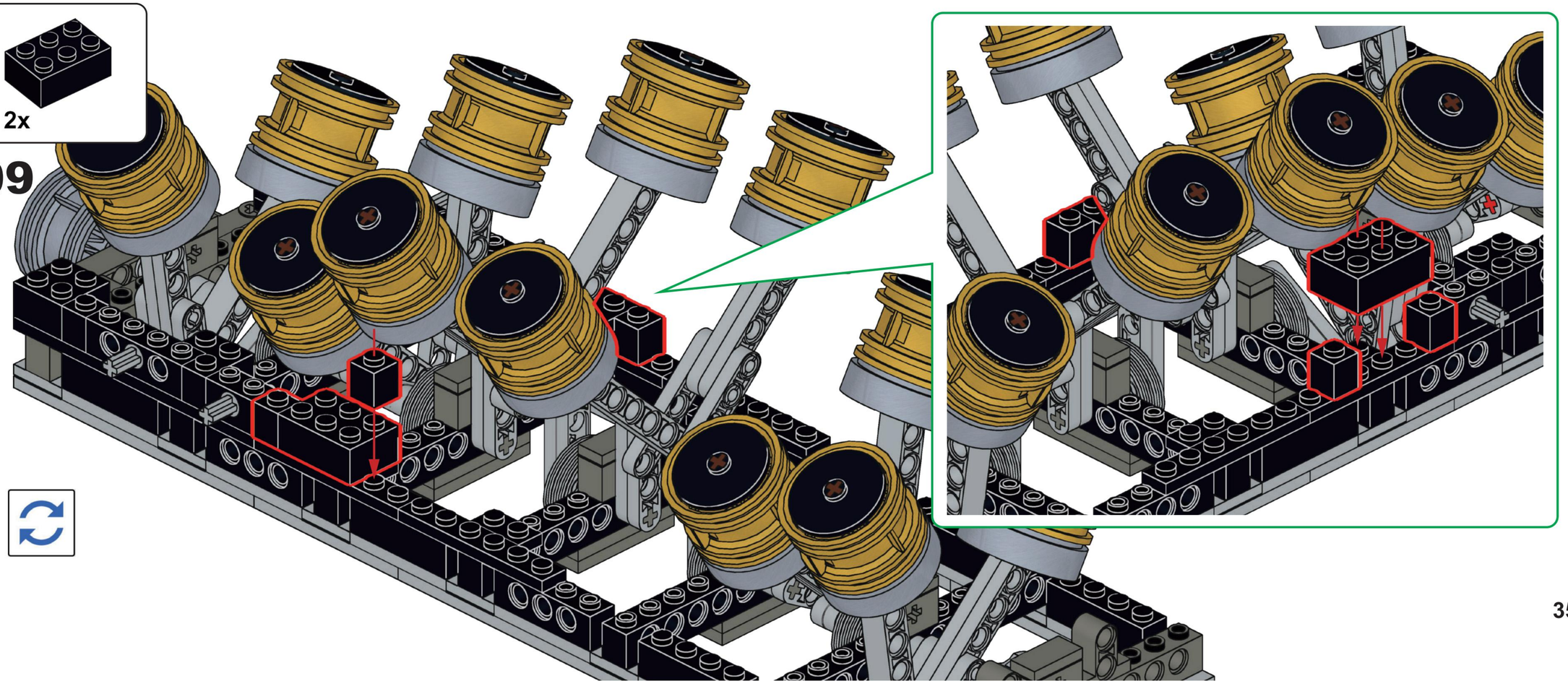

2x

A110

A105

A109

A105

A111

A107

A110

A107

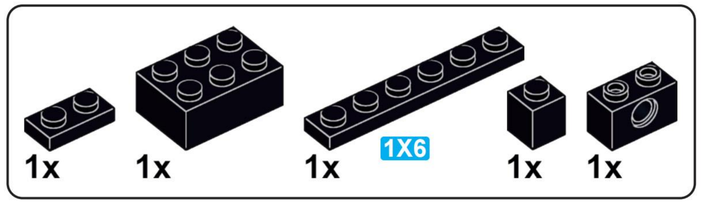

A112

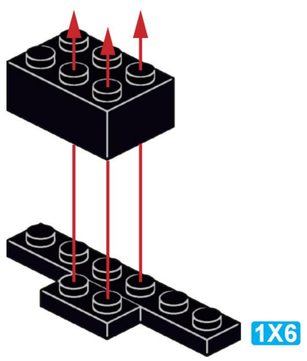

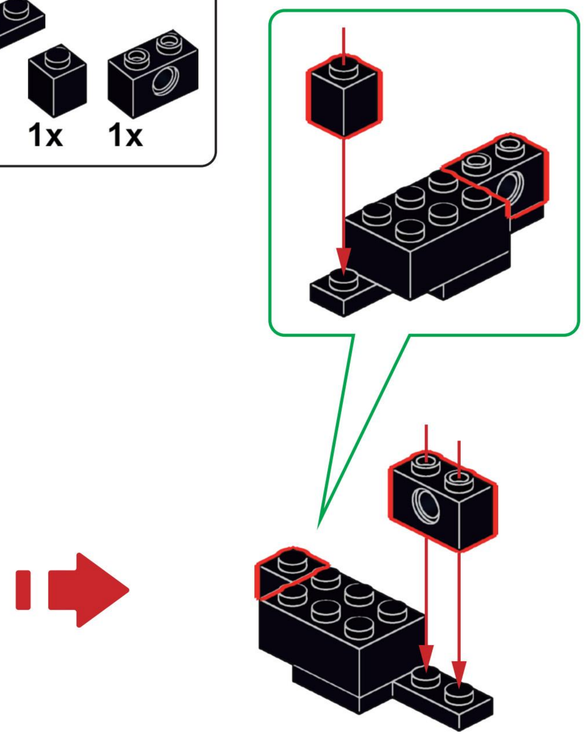

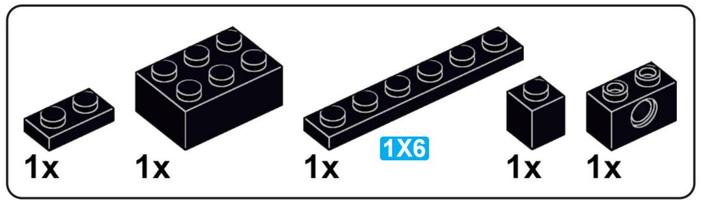

A113

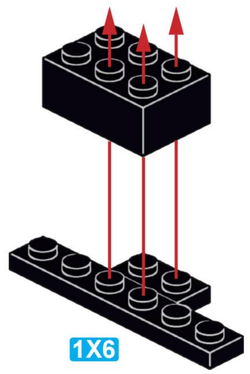

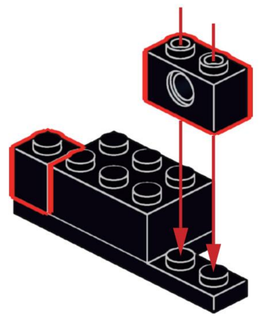

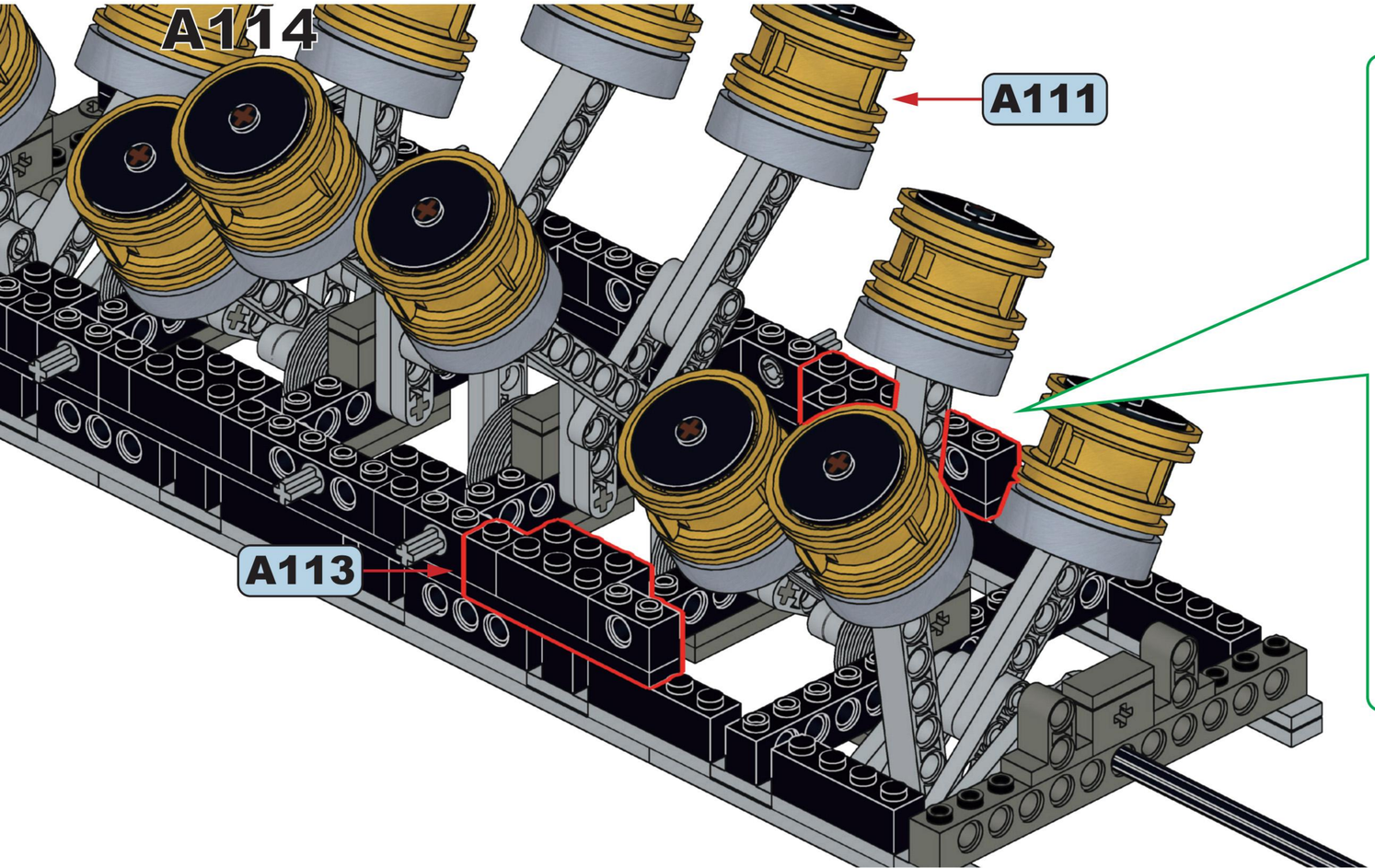

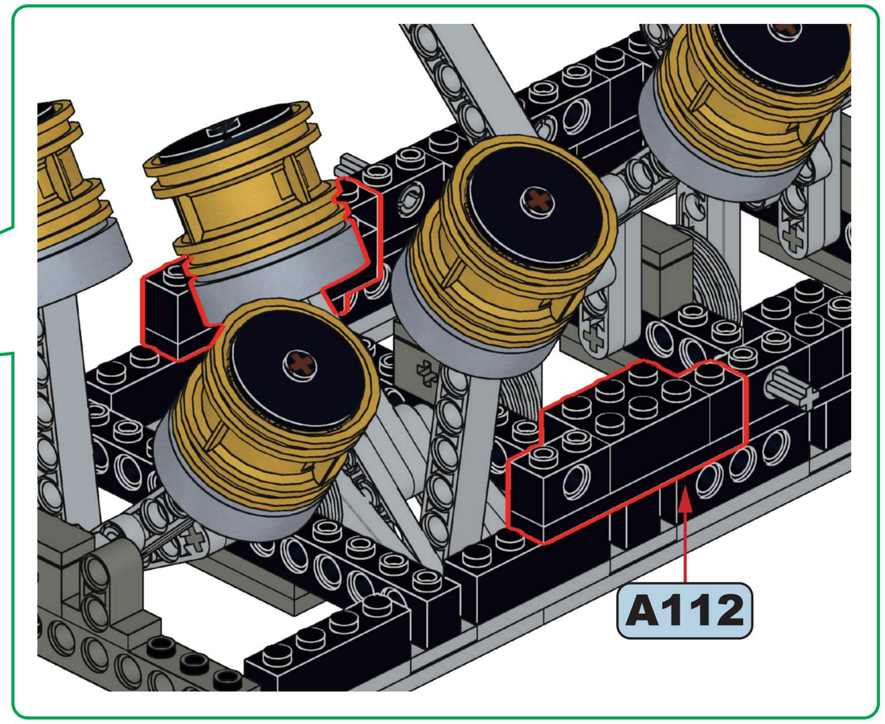

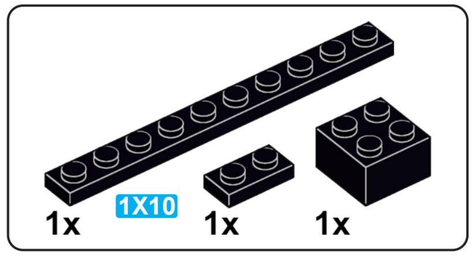

A115

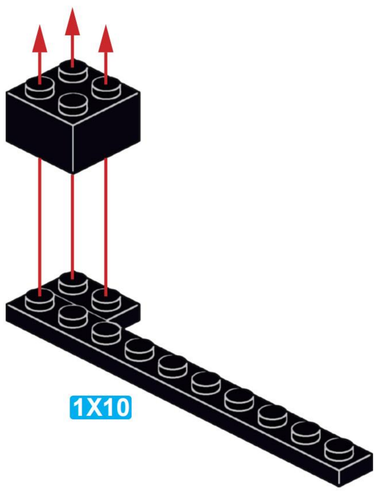

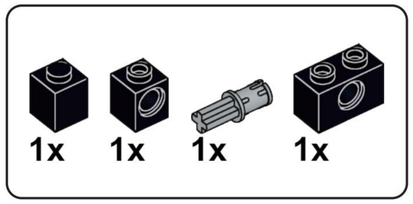

A116

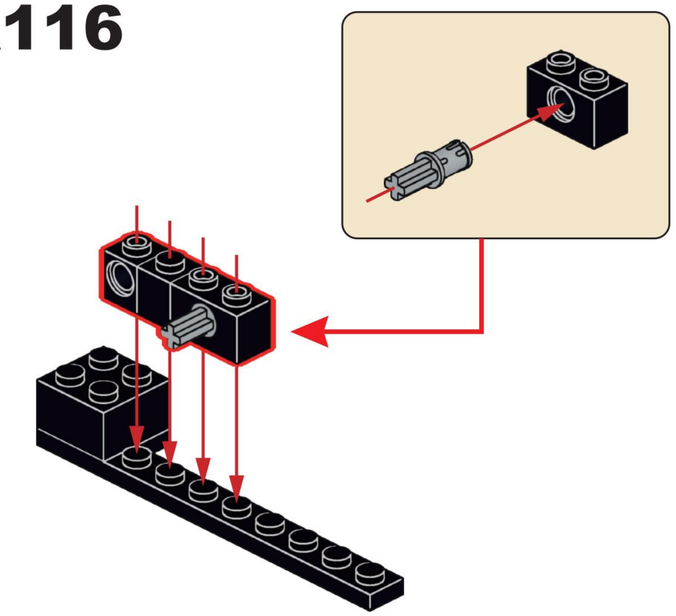

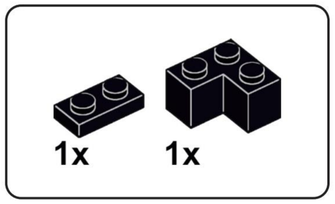

A117

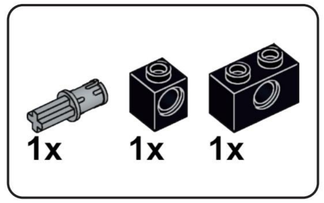

A118

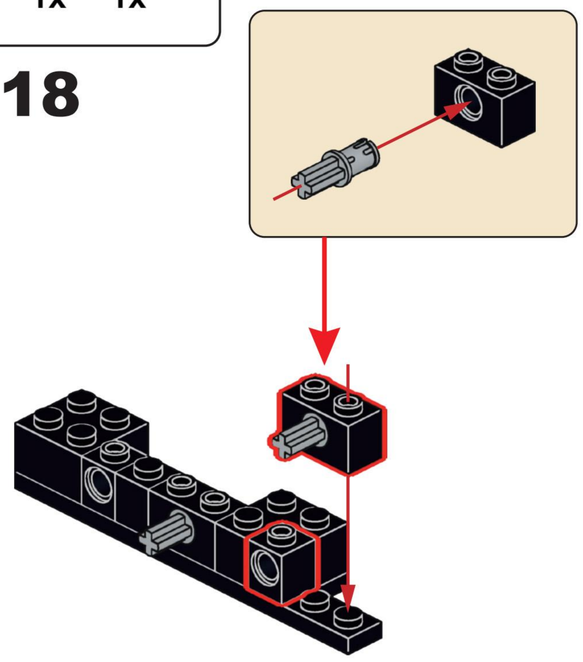

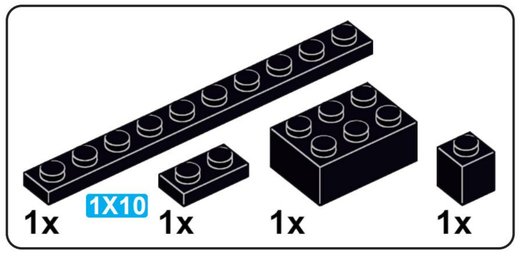

A119

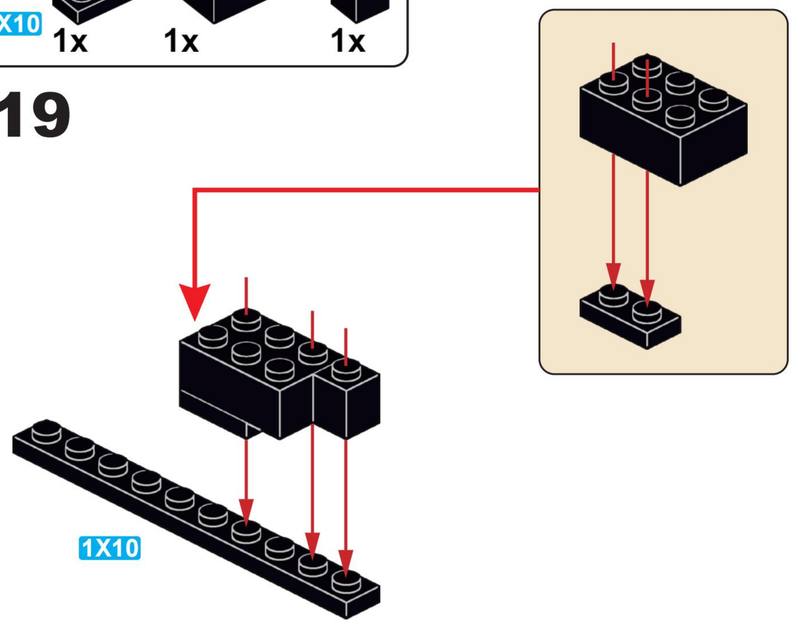

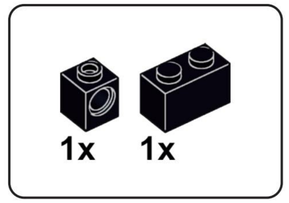

A120

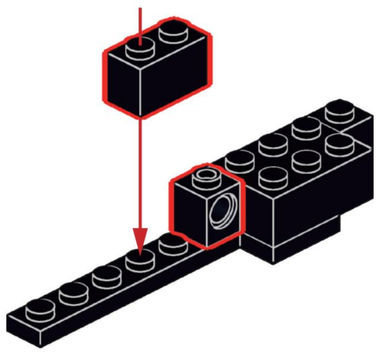

1x 1x

A121

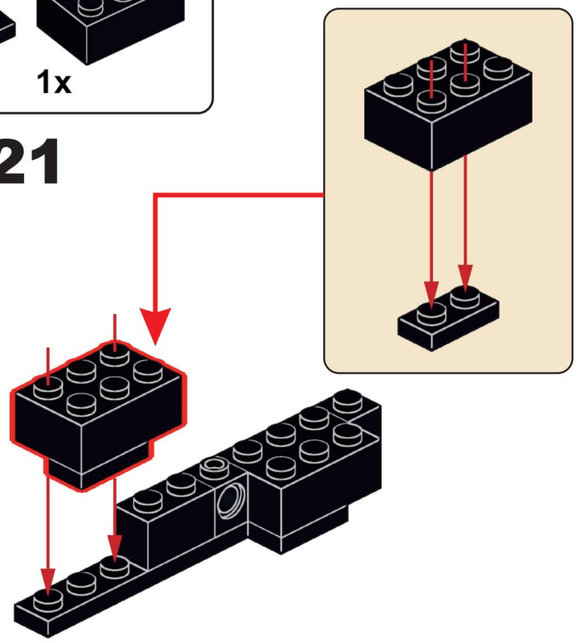

A122

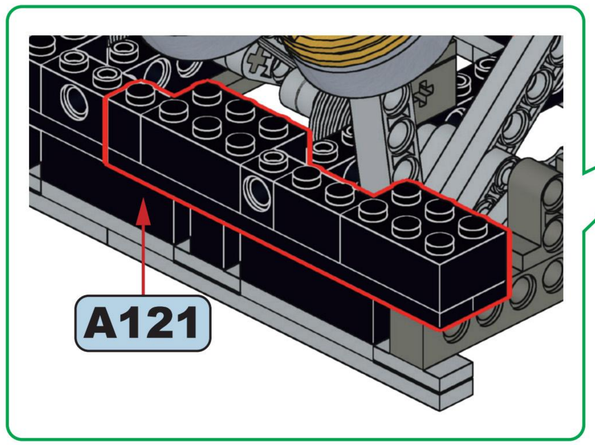

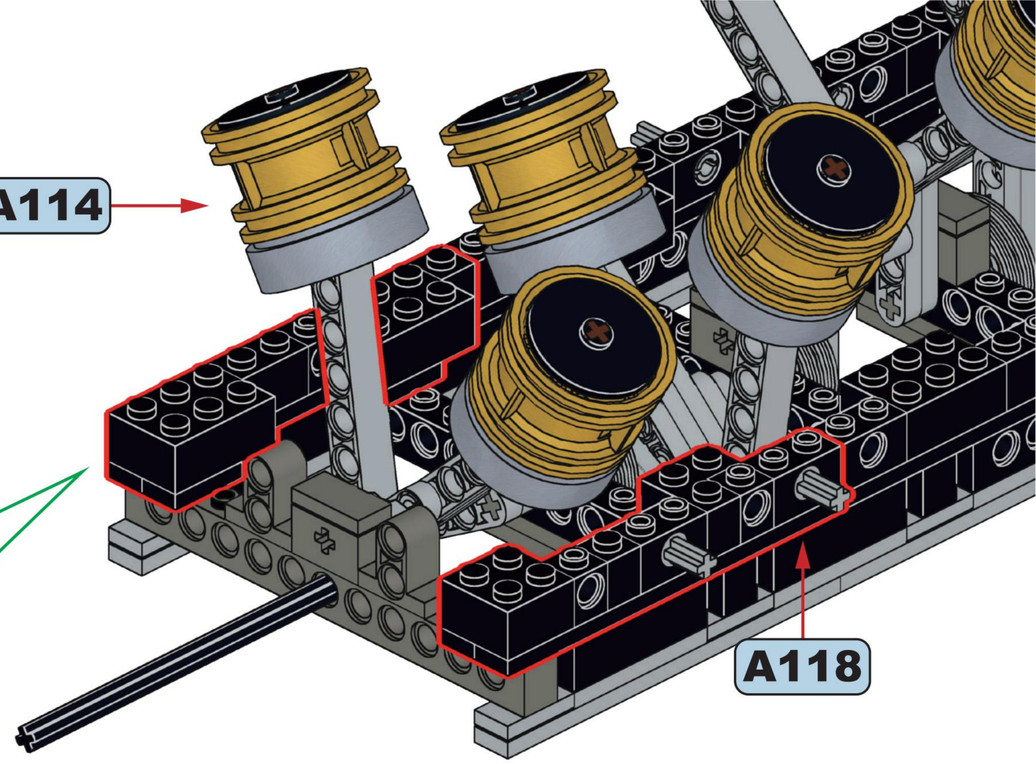

2x 6x 1X6

A123

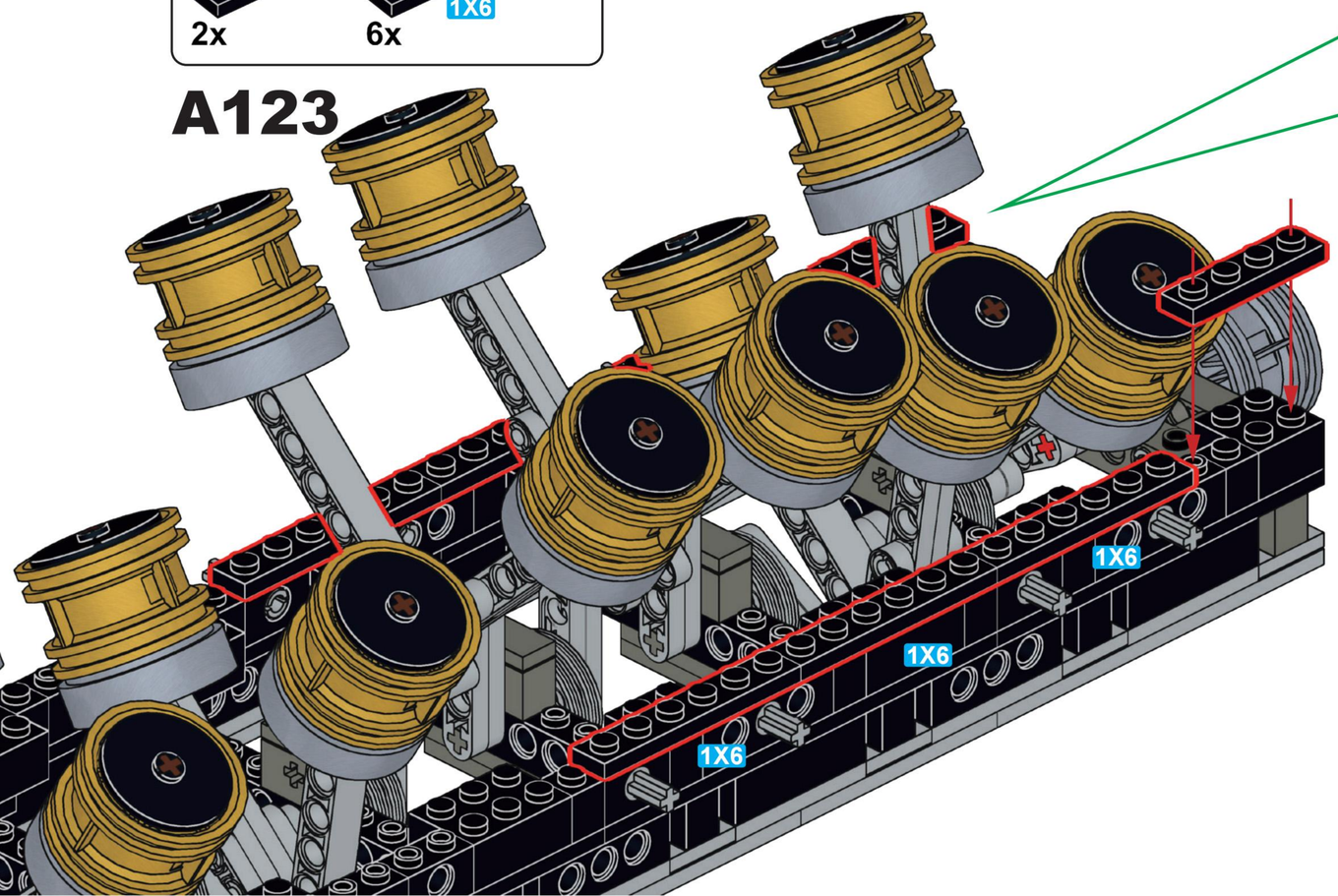

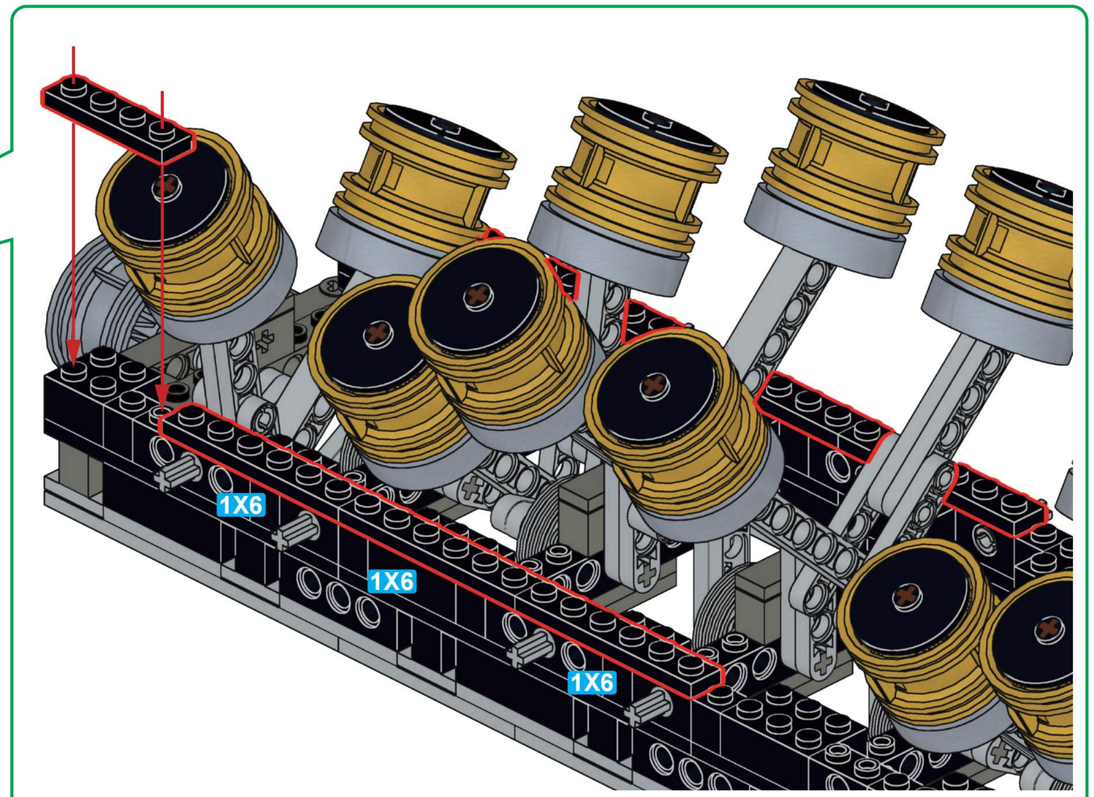

A124

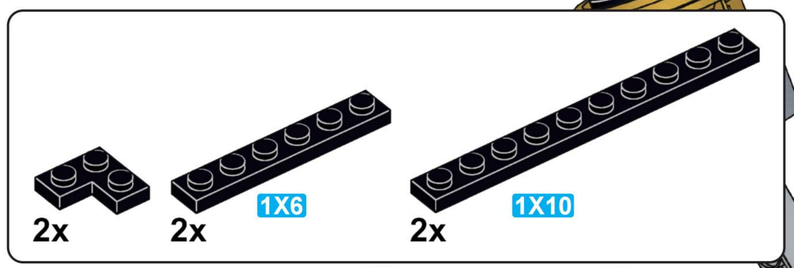

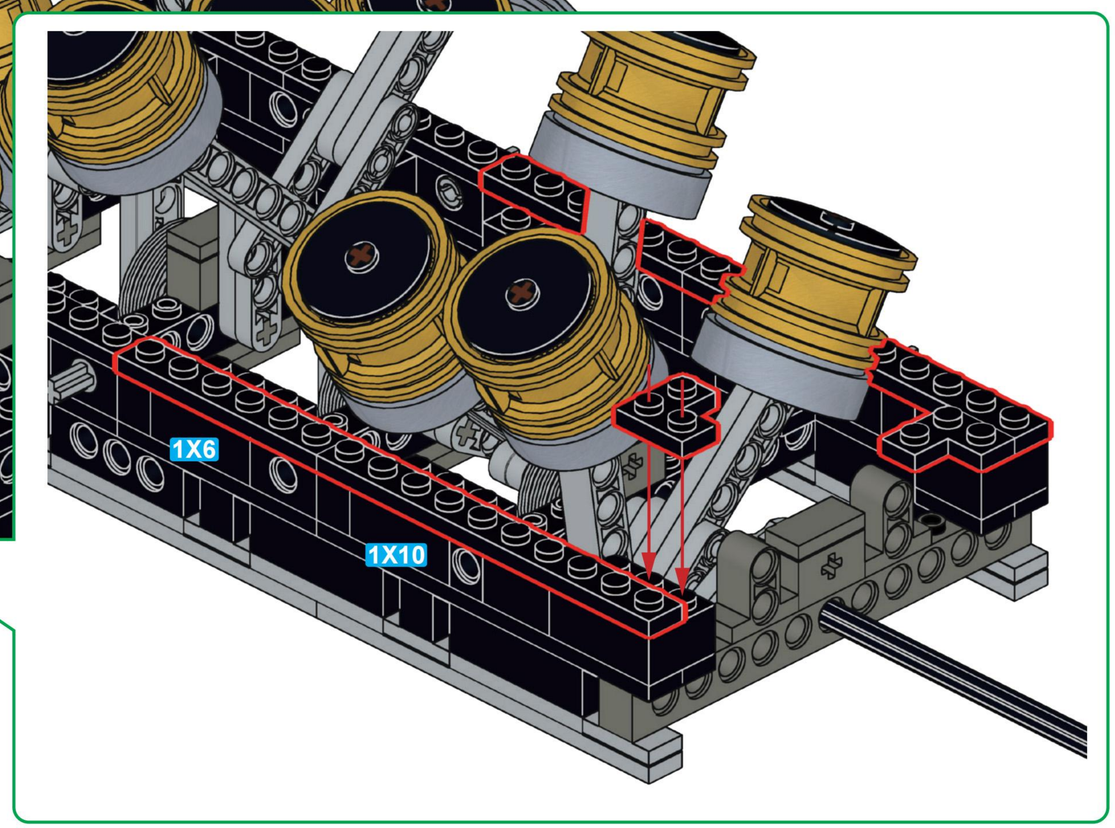

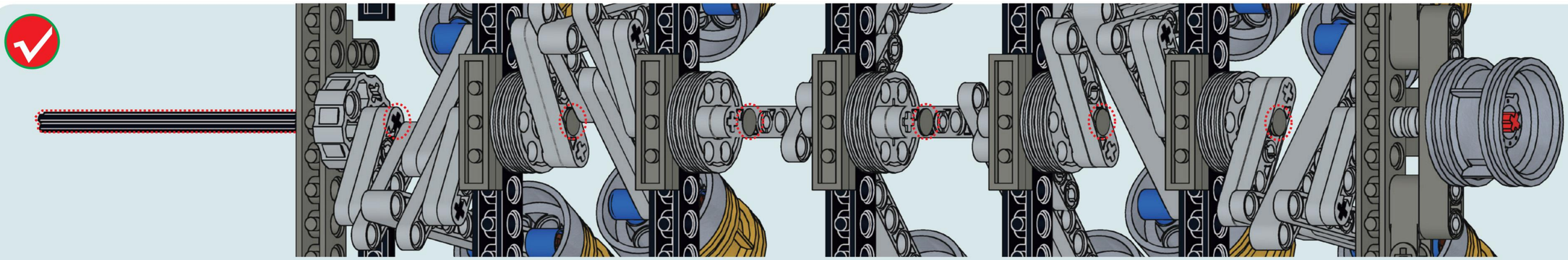

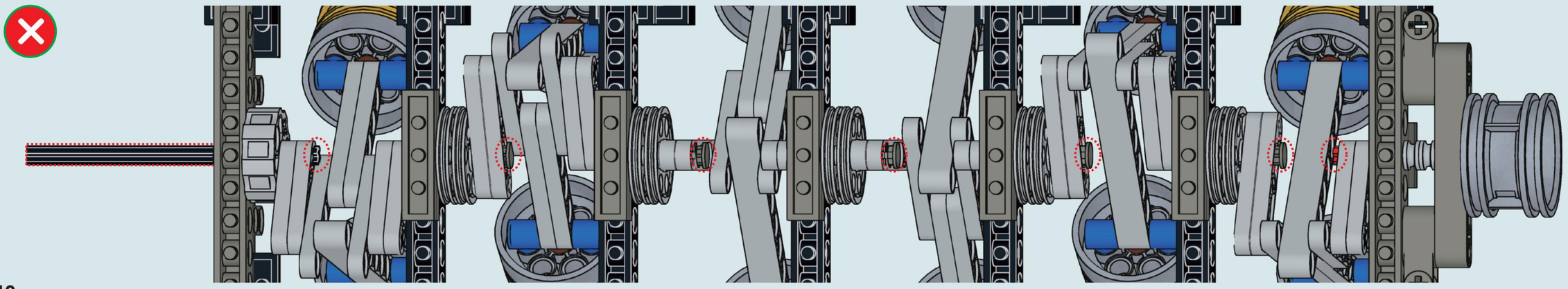

2

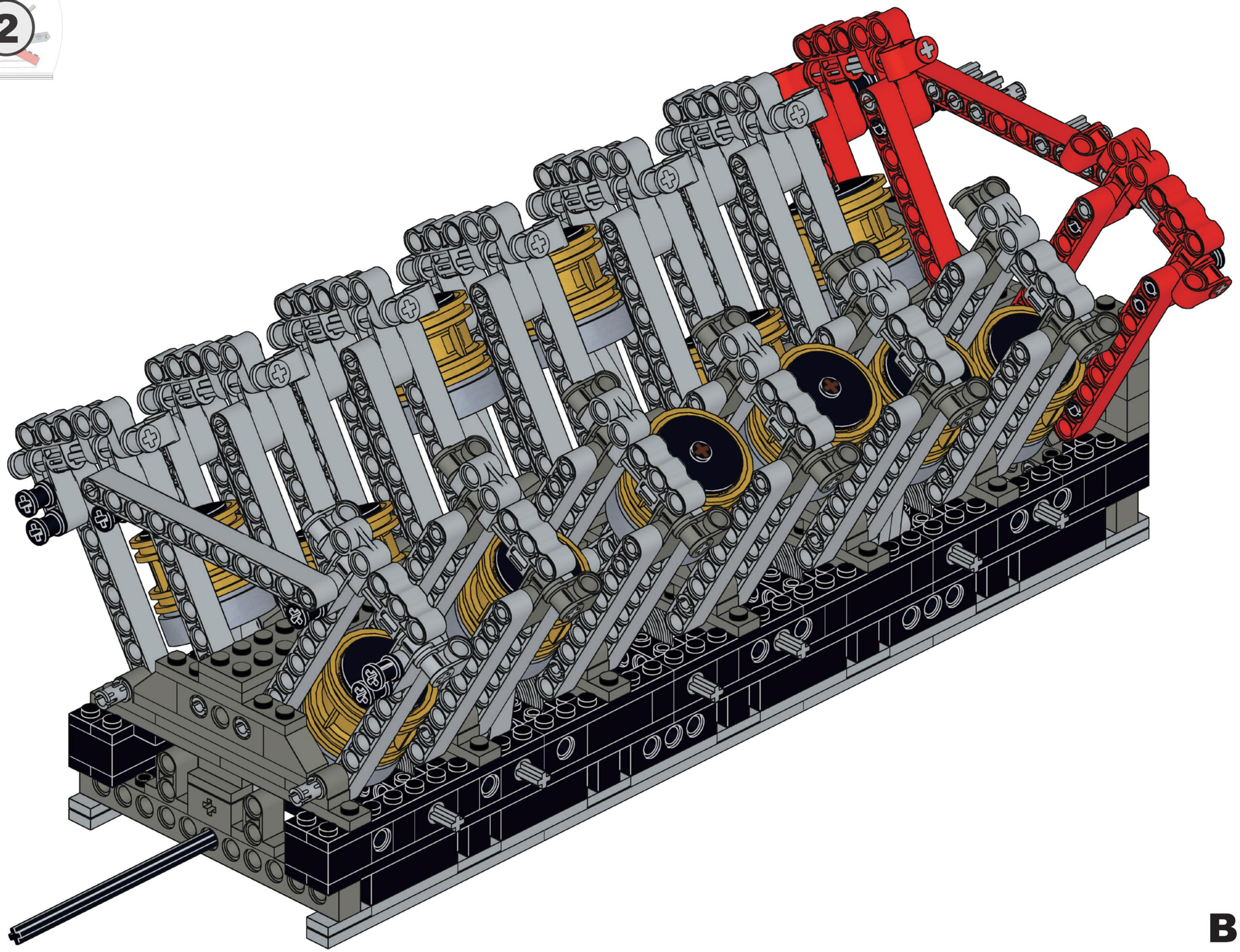

B

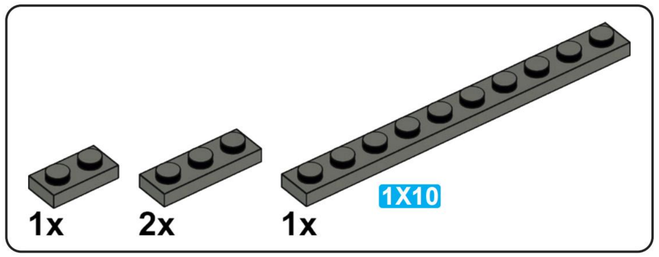

B1

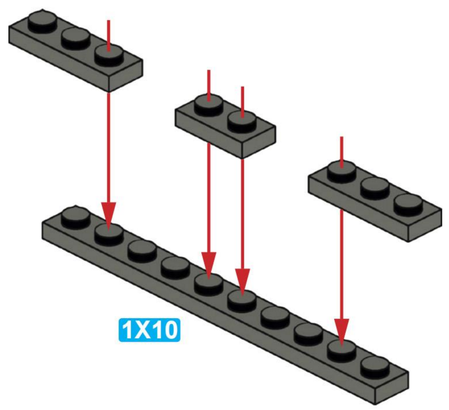

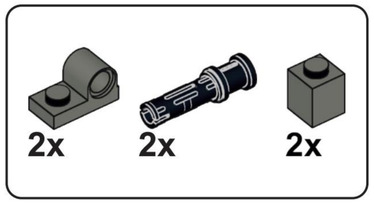

B2

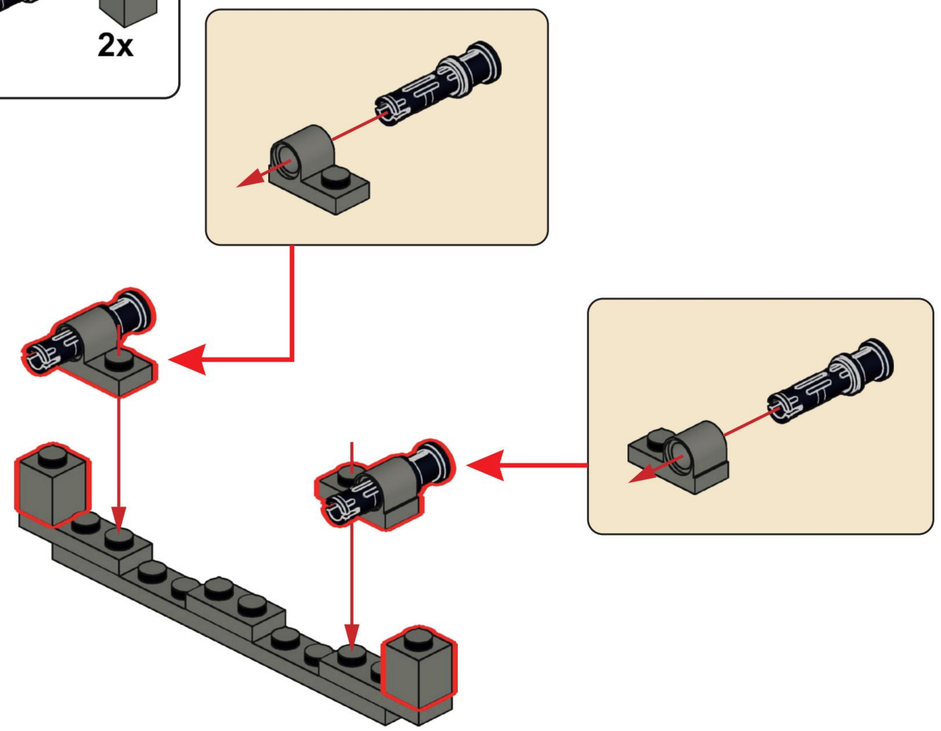

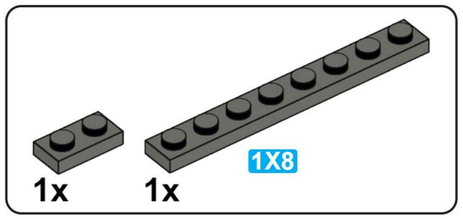

B3

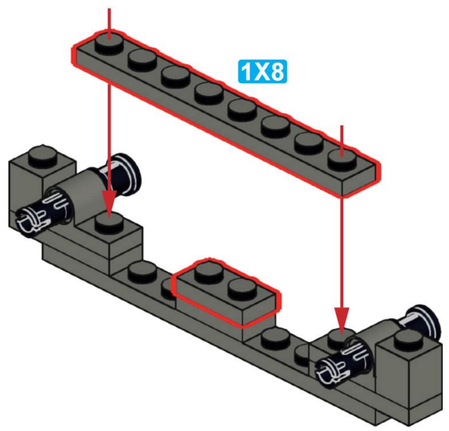

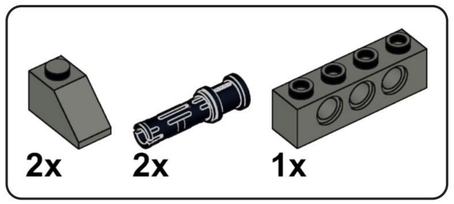

B4

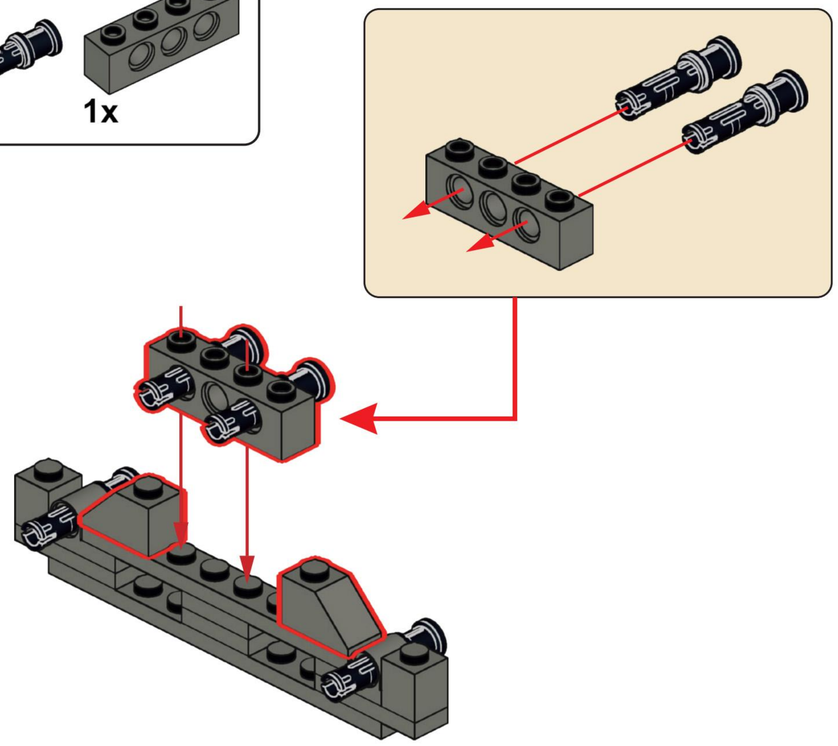

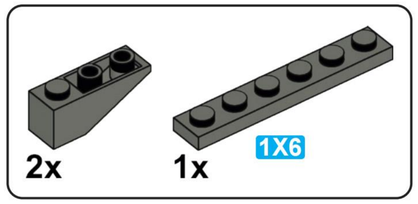

B5

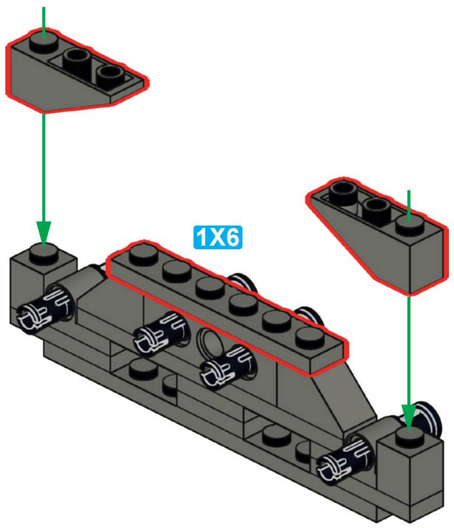

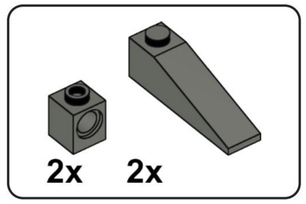

B6

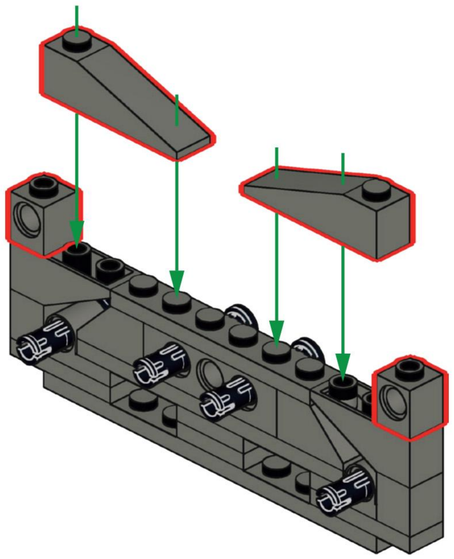

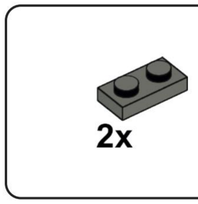

B7

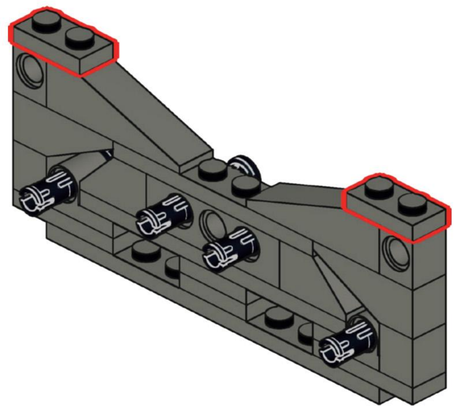

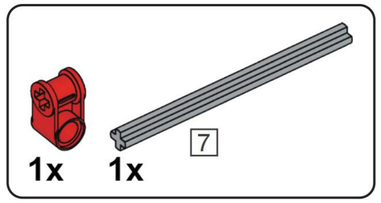

B8

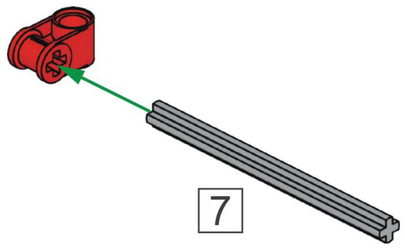

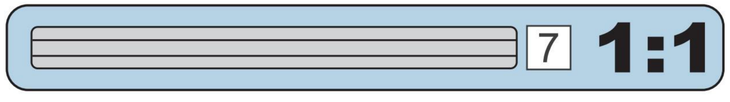

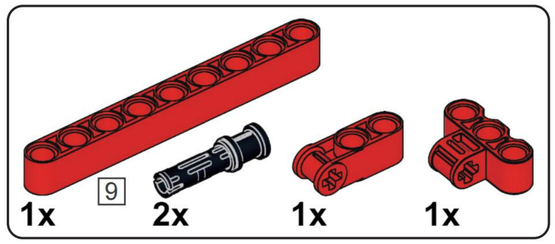

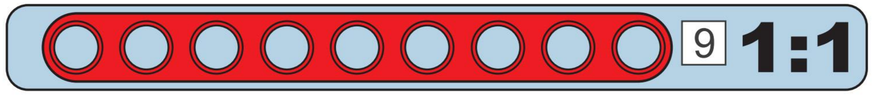

B9

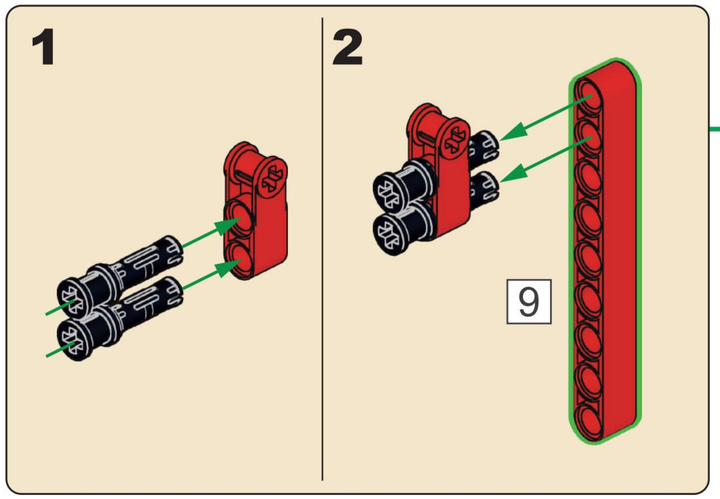

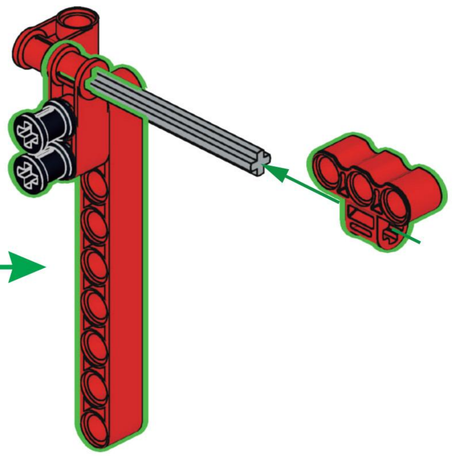

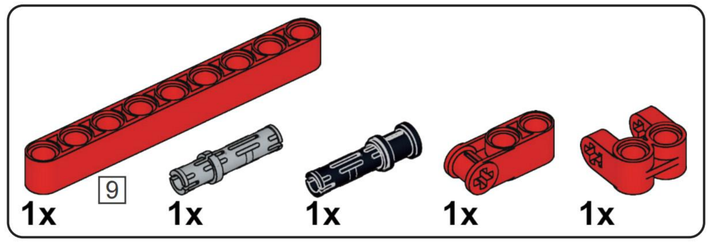

B10

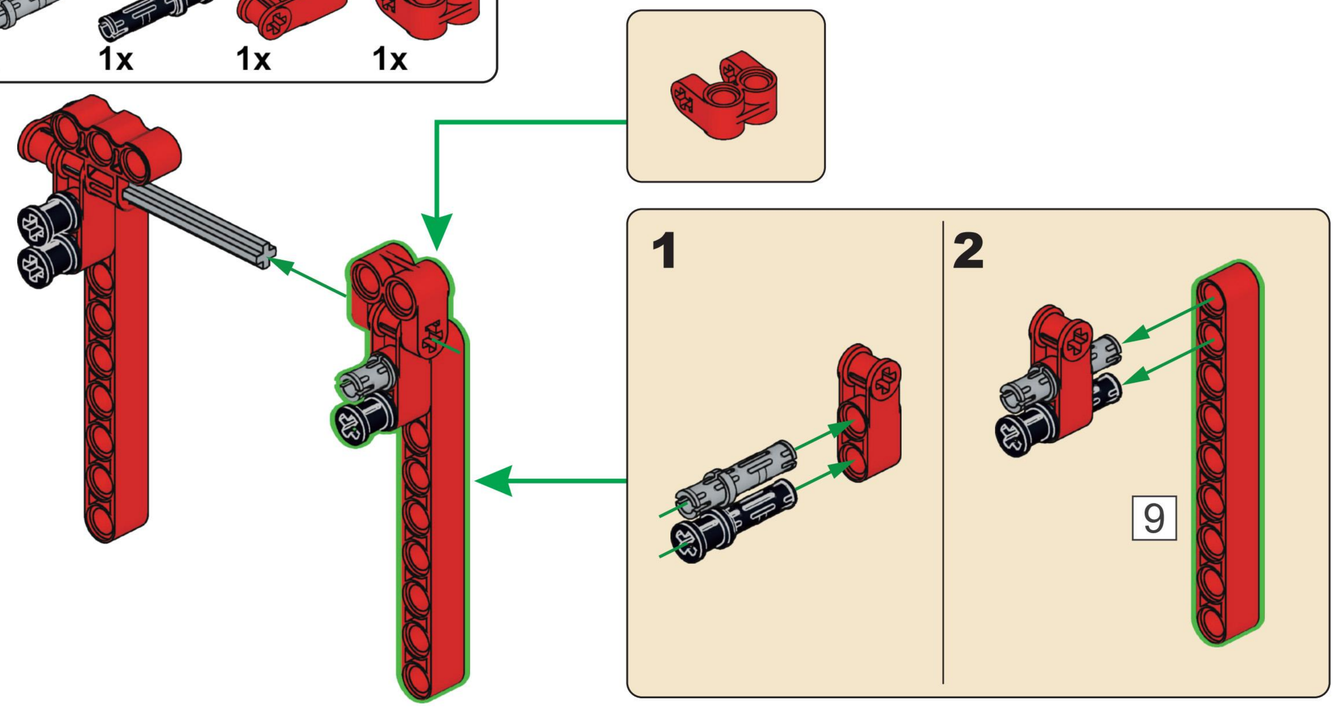

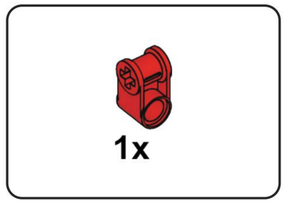

B11

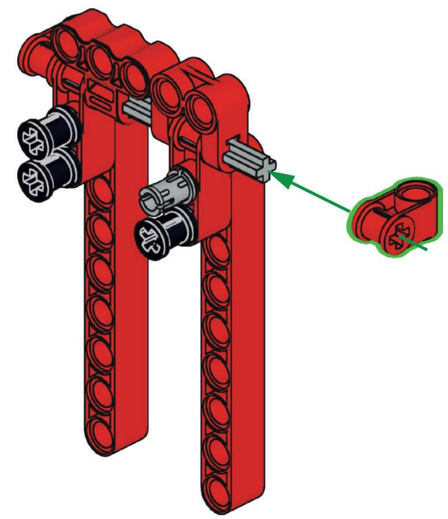

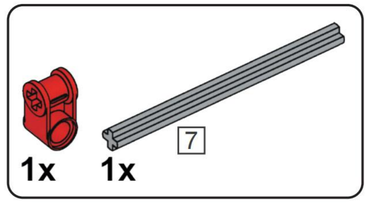

B12

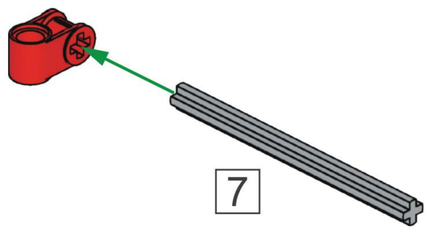



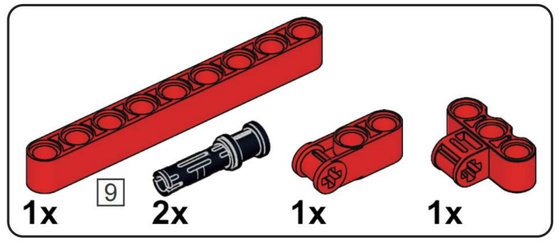

B13

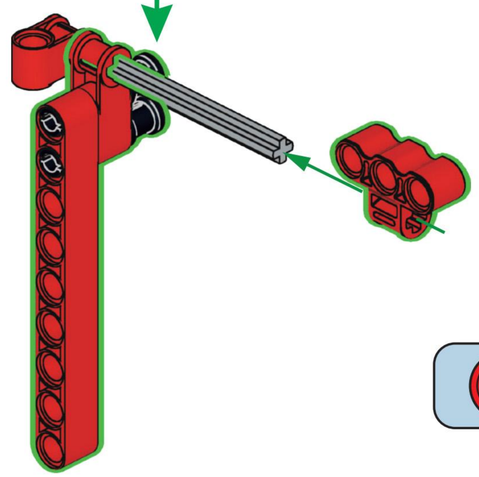

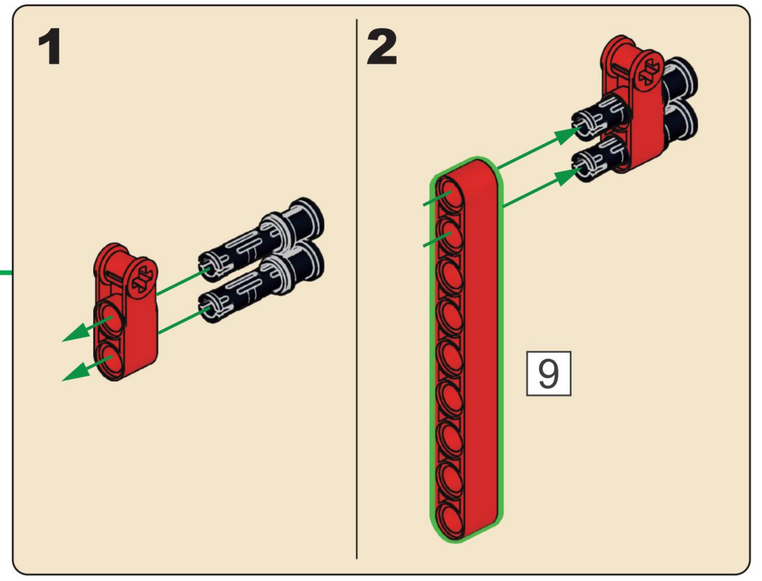

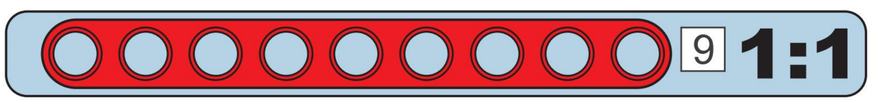

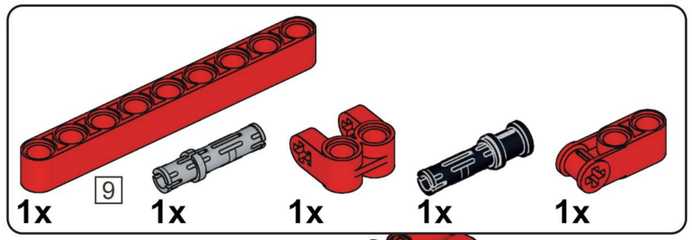

B14

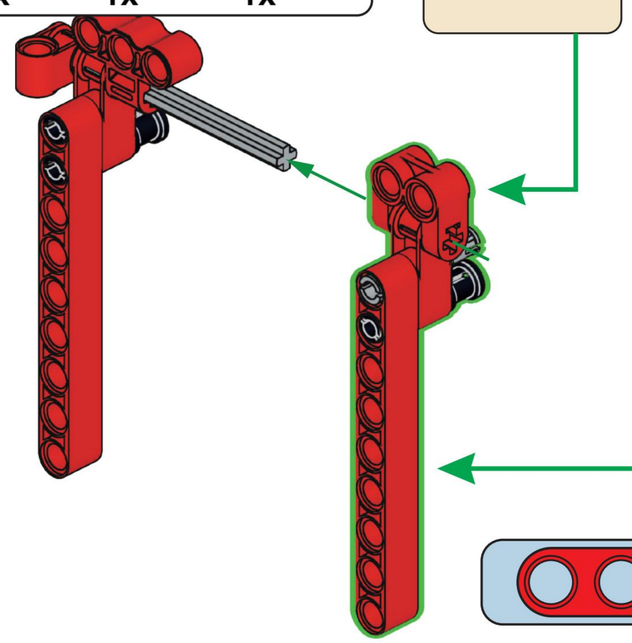

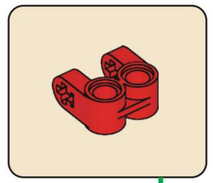

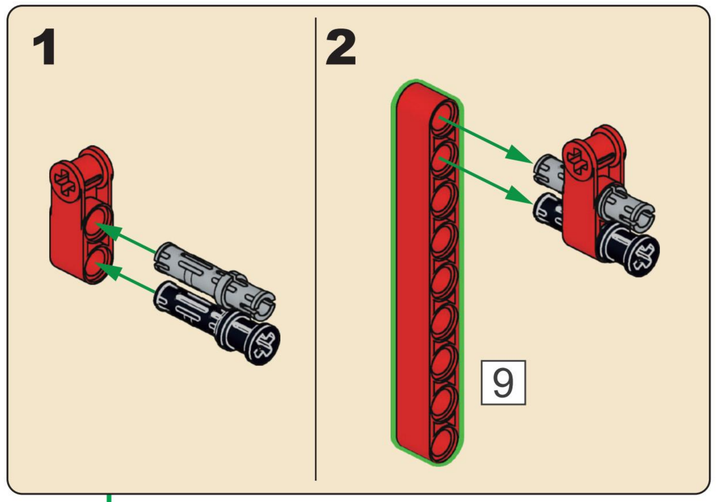

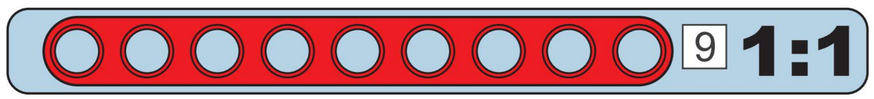

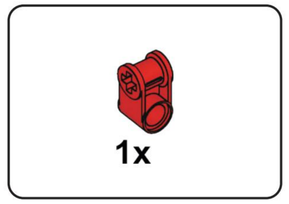

B15

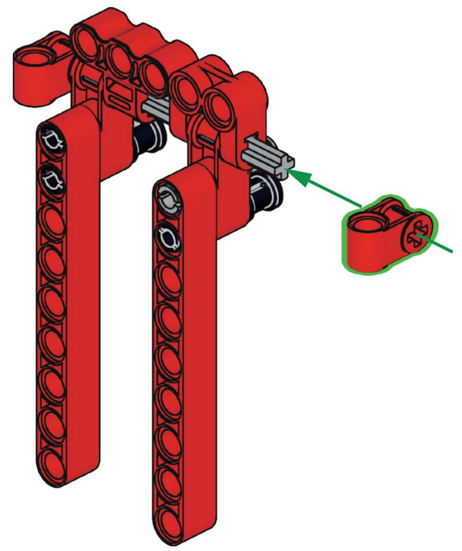

B16

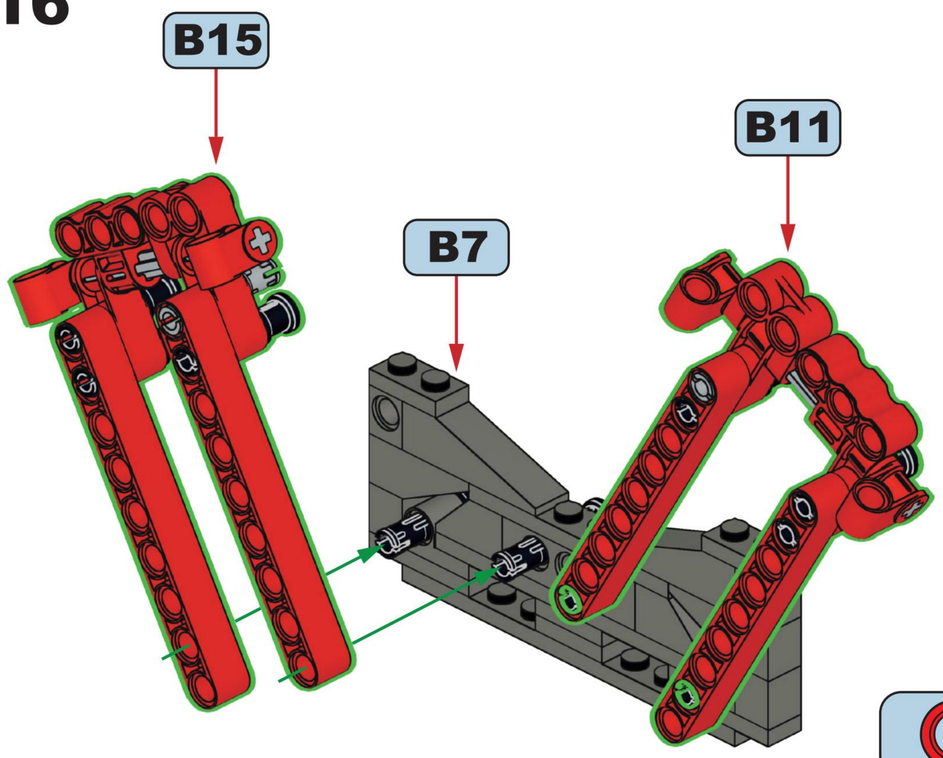

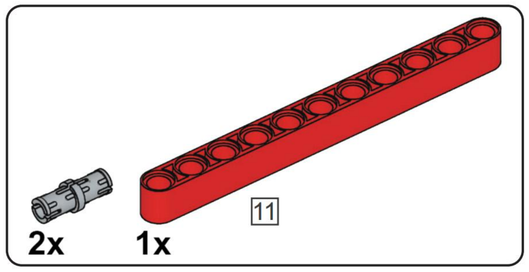

B17

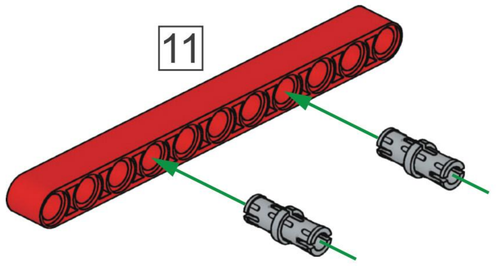

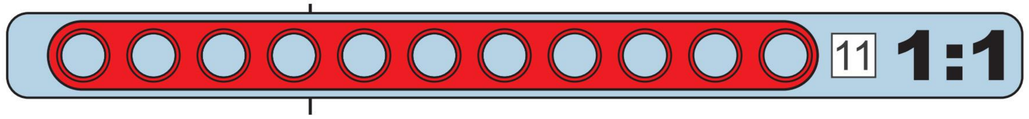

5x

B18

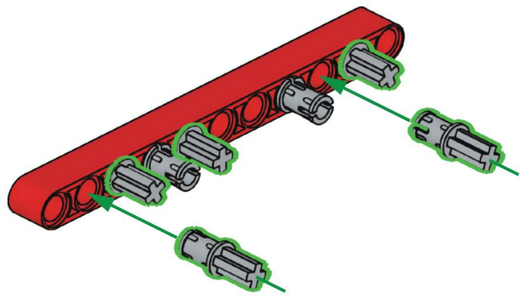

B19

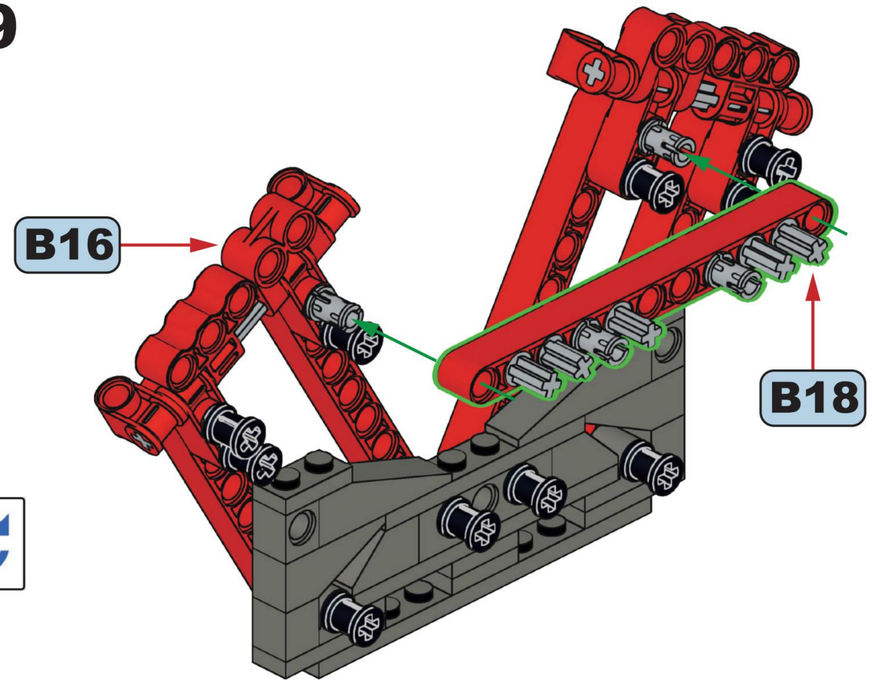

B20

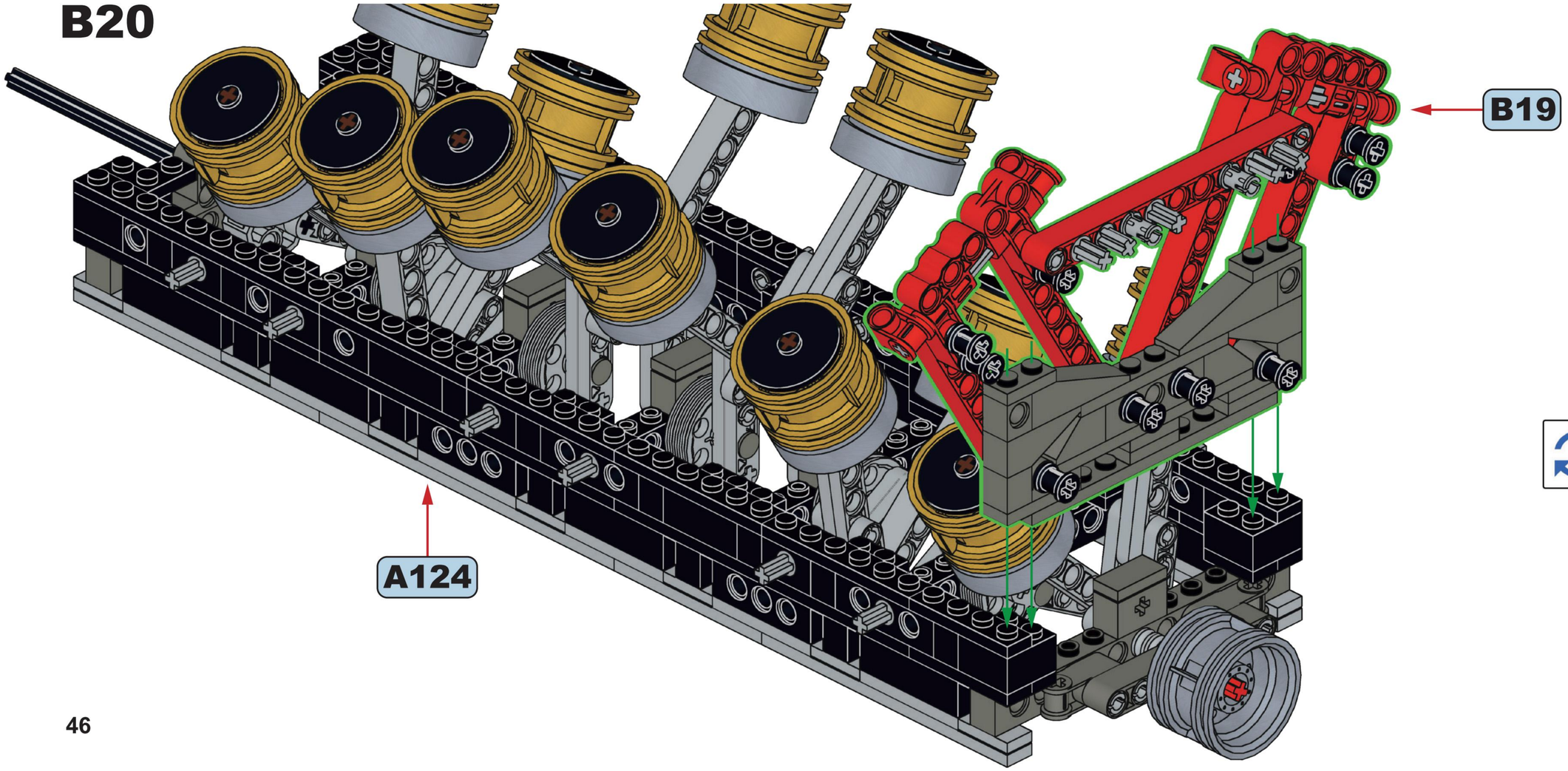

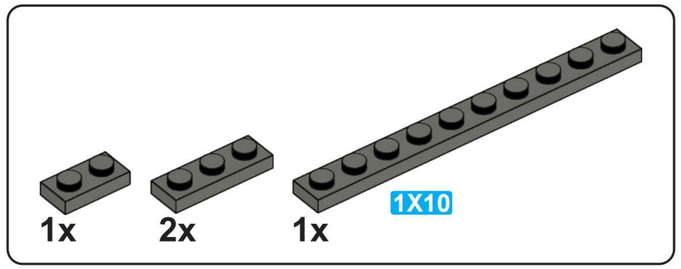

B21

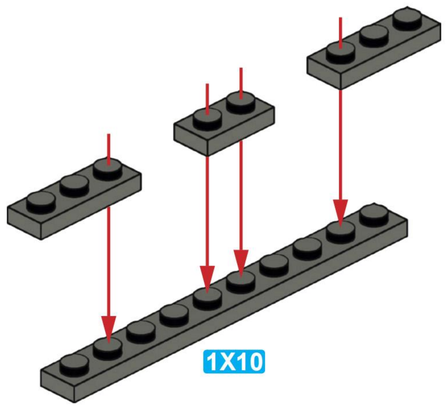

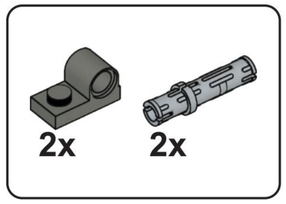

B22

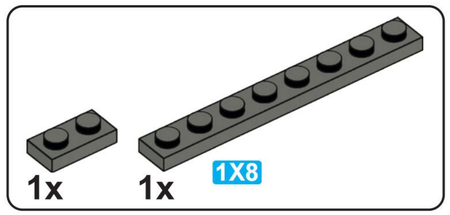

B23

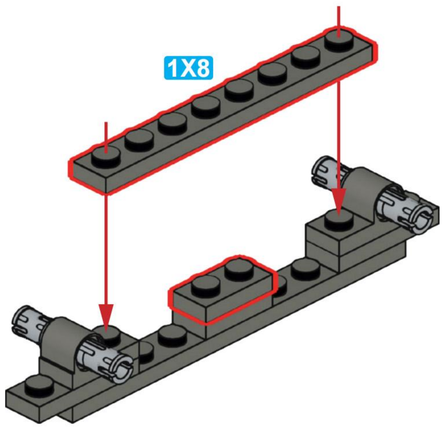

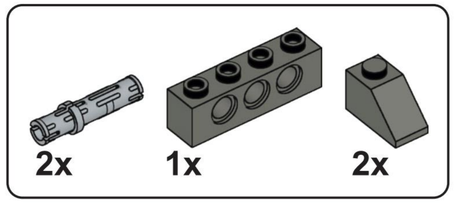

B24

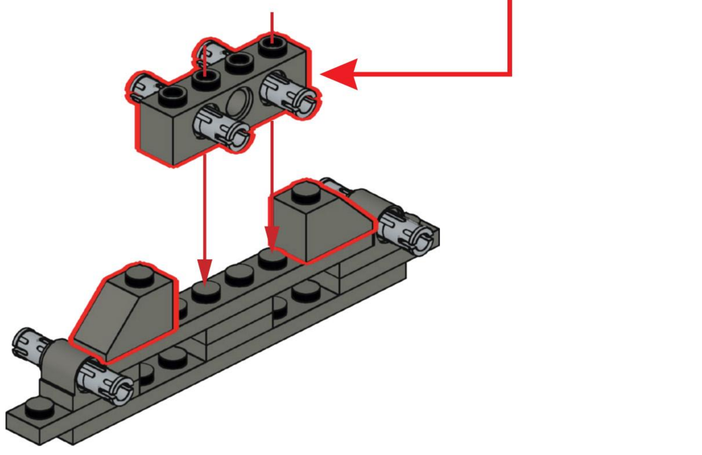

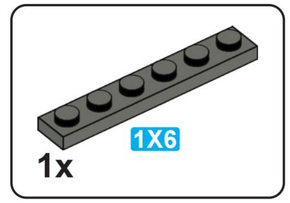

B25

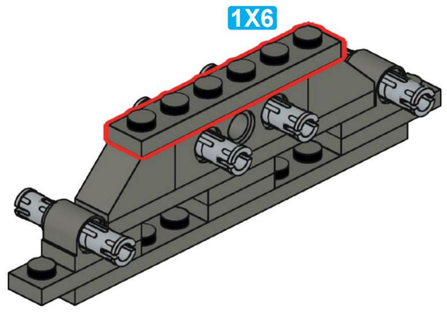

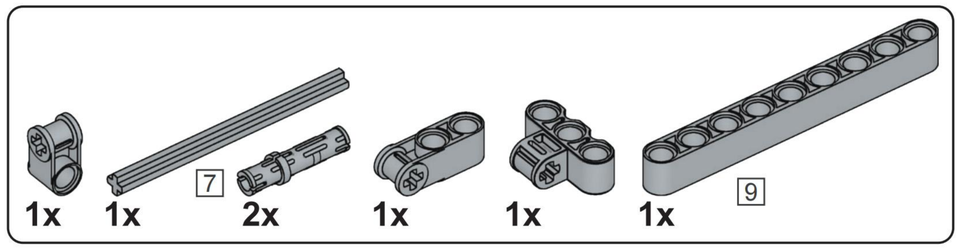

B26

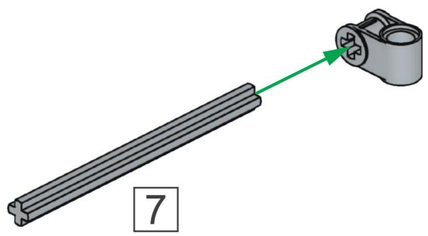

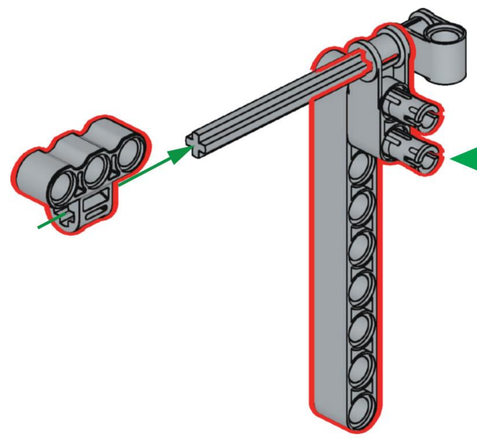

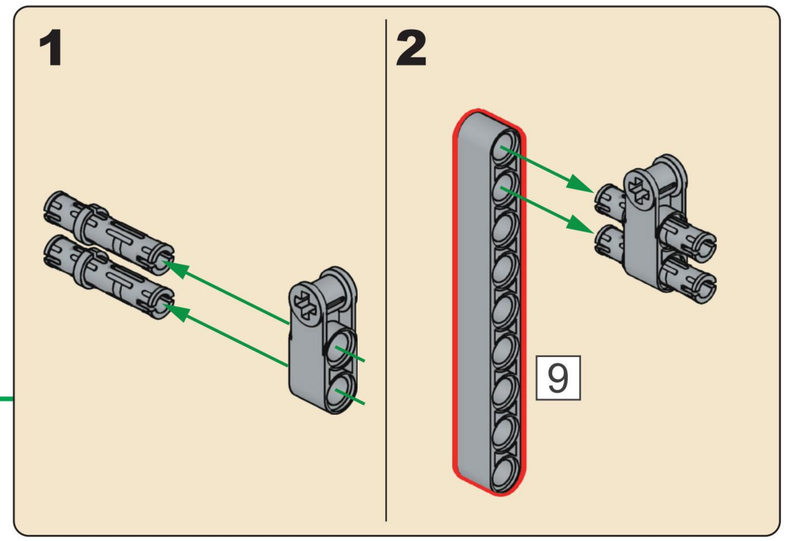

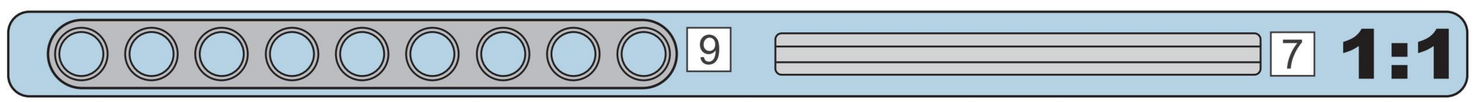

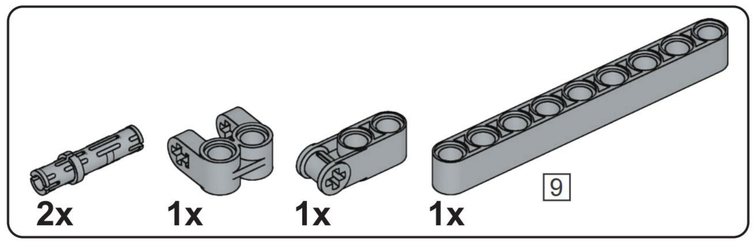

B27

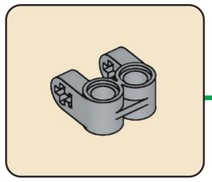

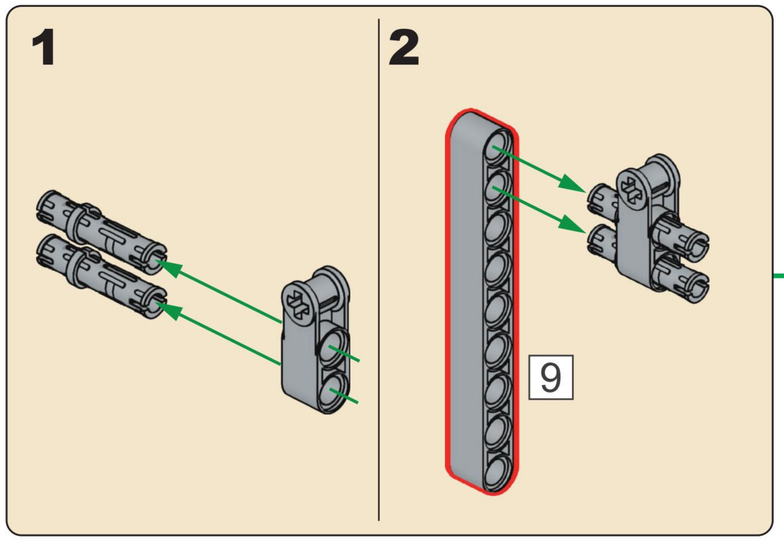

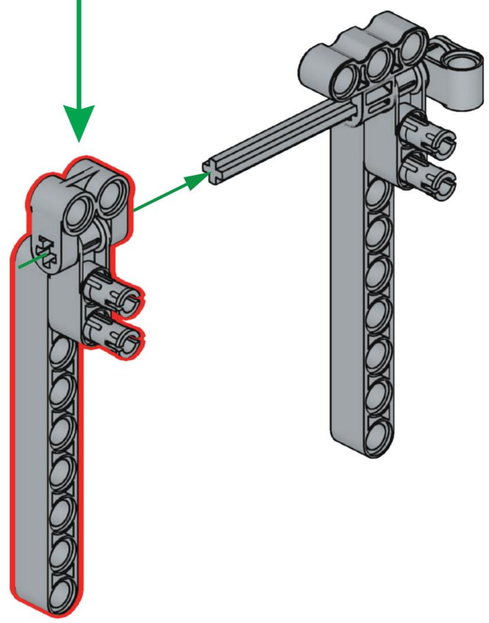

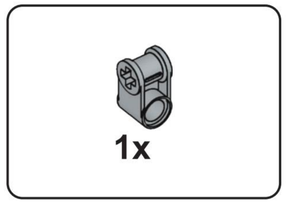

B28

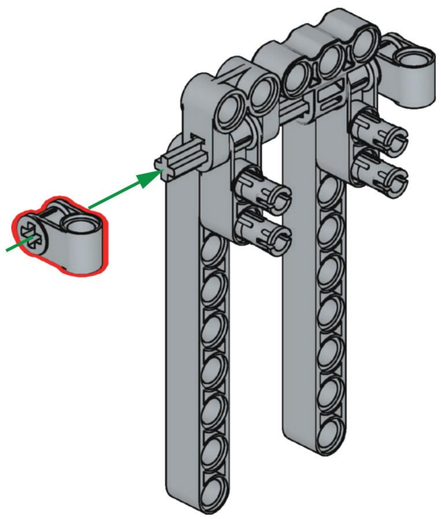

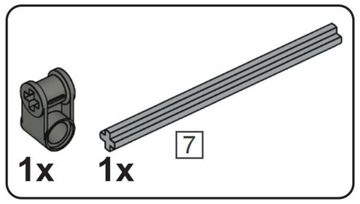

B29

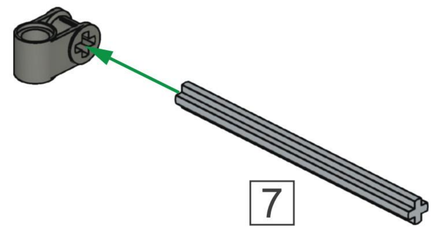

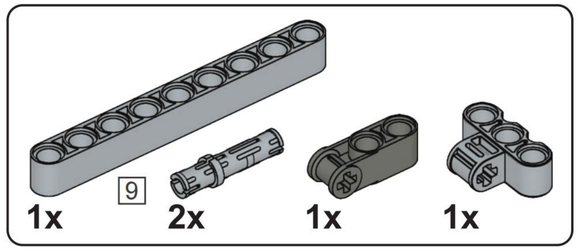

B30

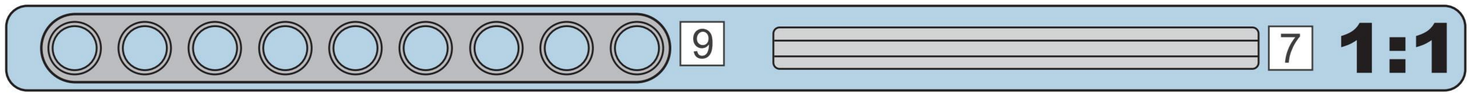

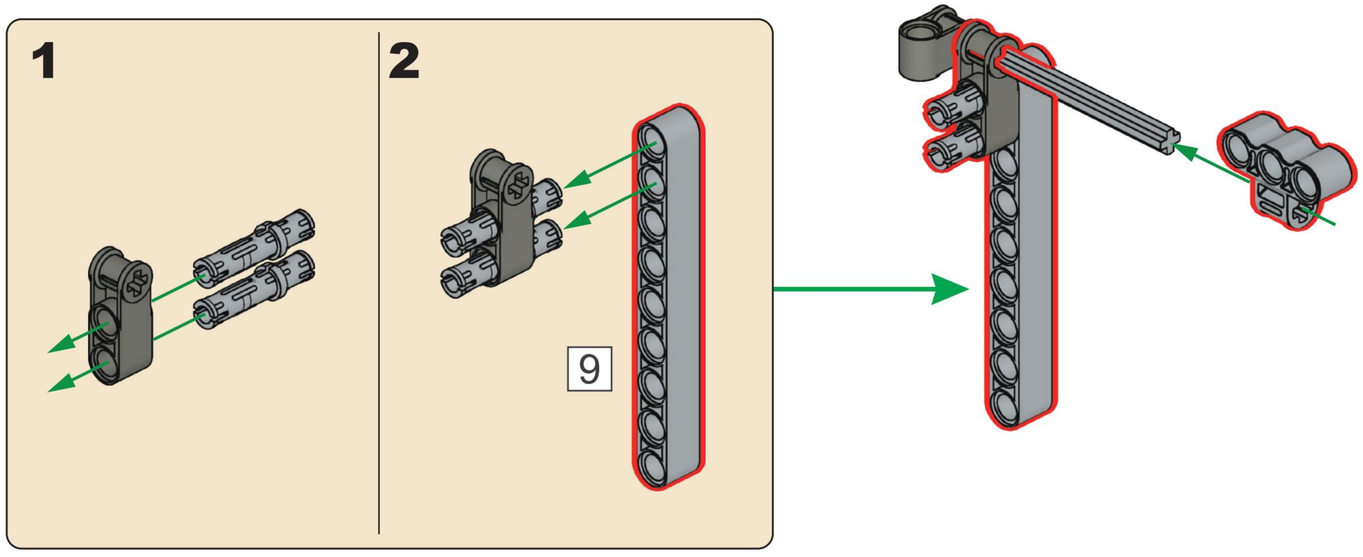

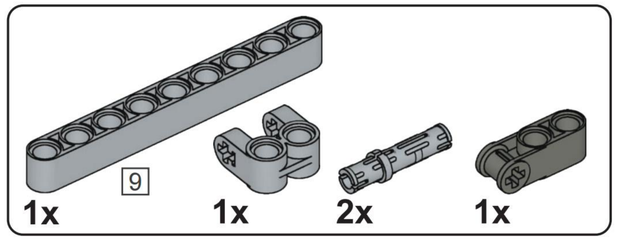

B31

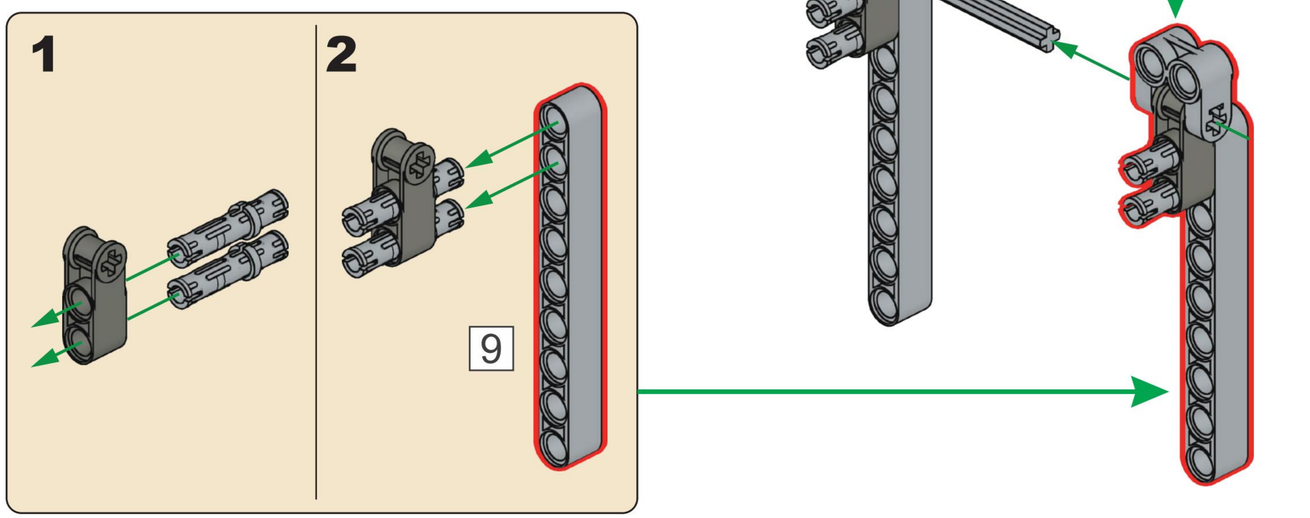

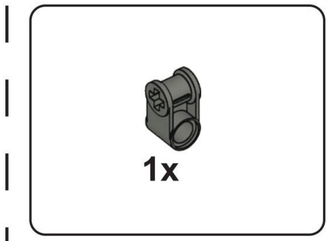

B32

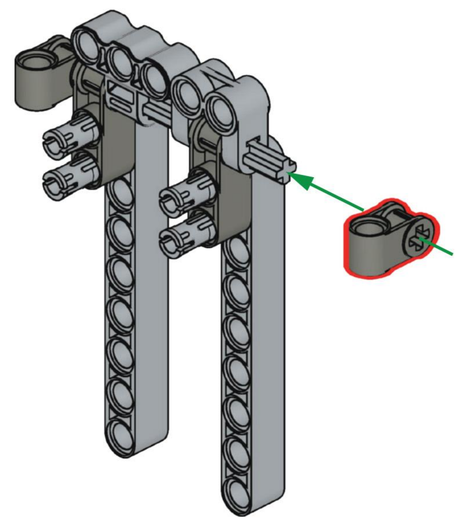

B33

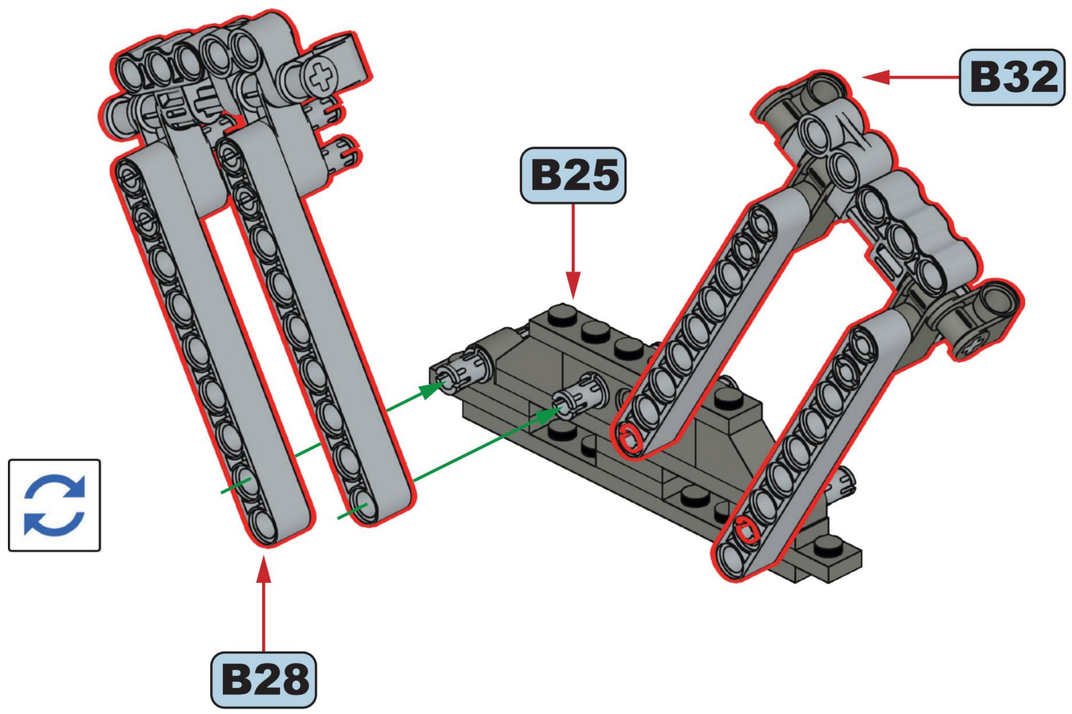

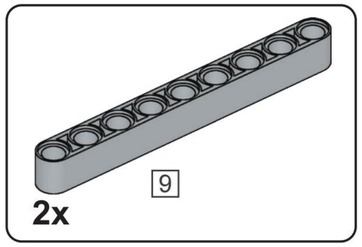

B34

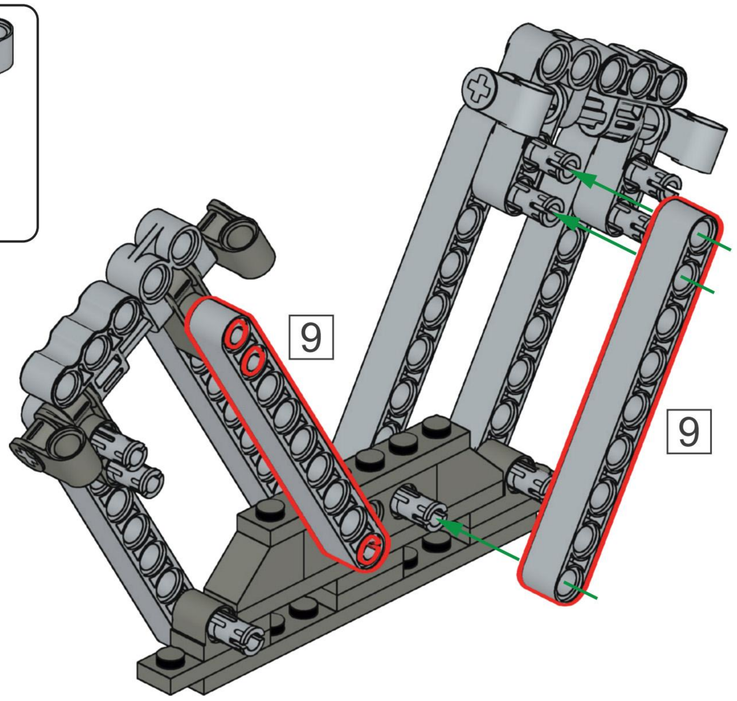

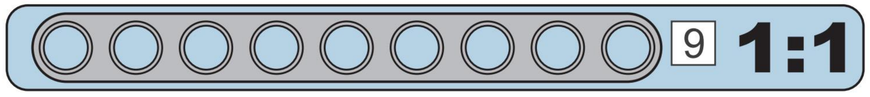

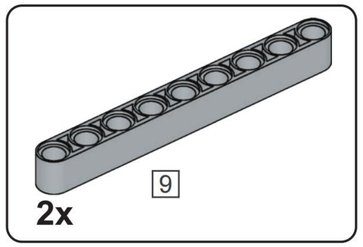

B35

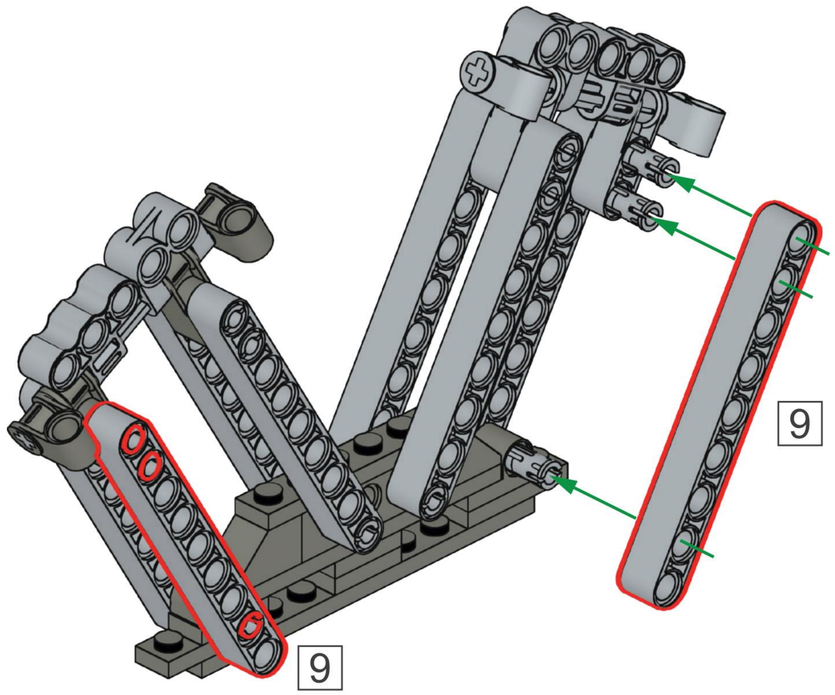

B36

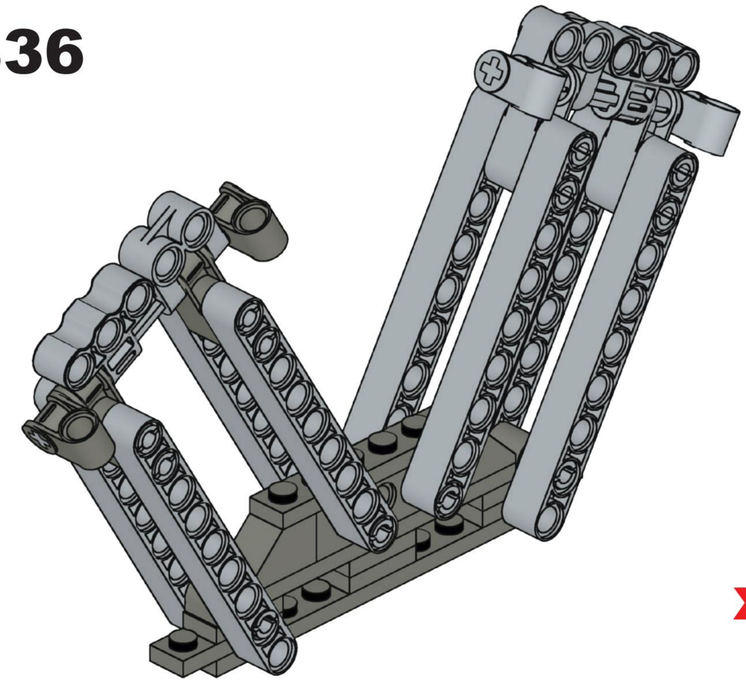

x5

B37

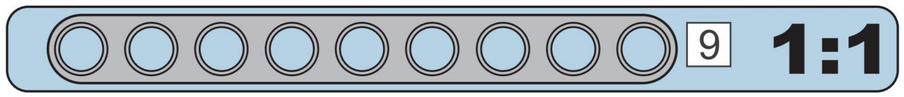

B38

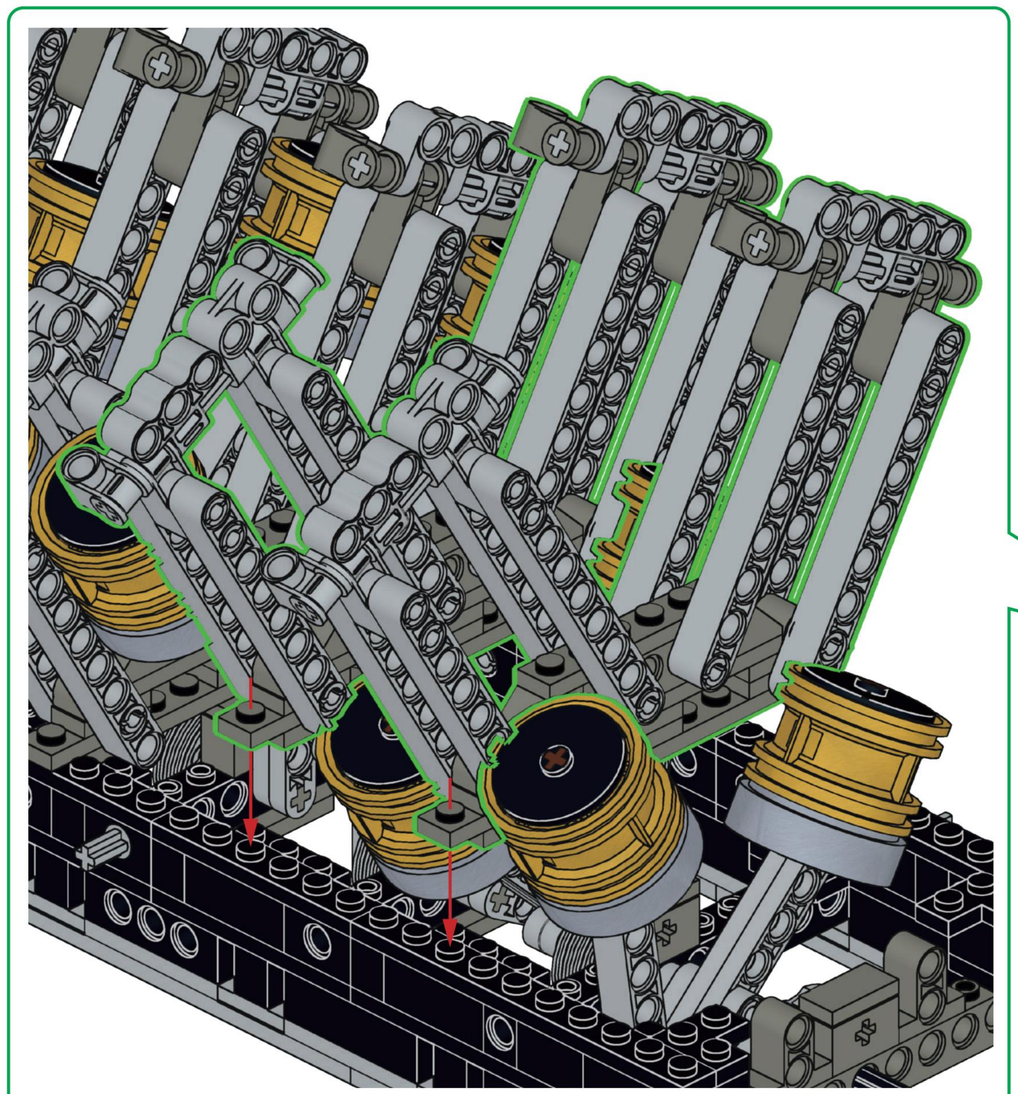

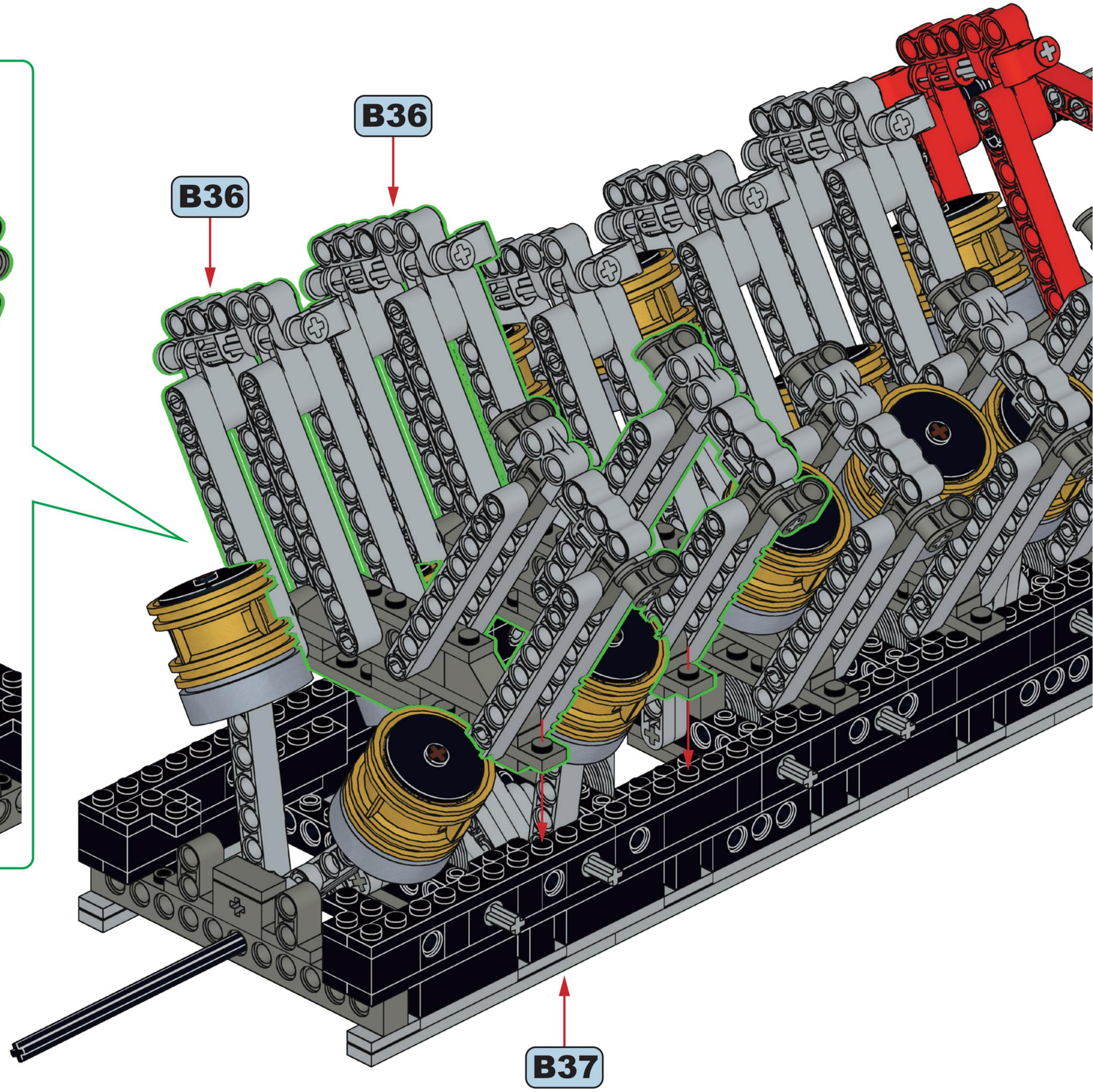

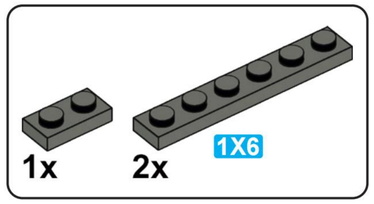

B39

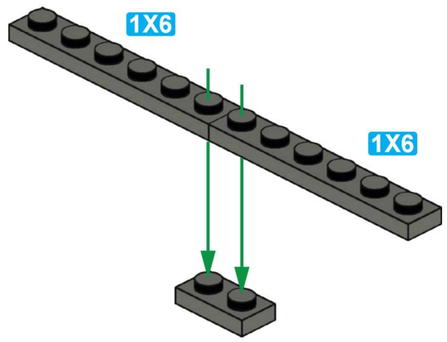

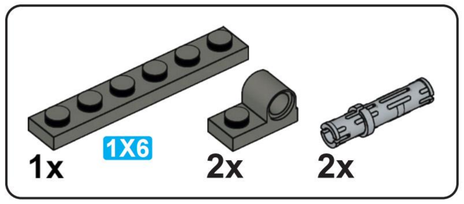

B40

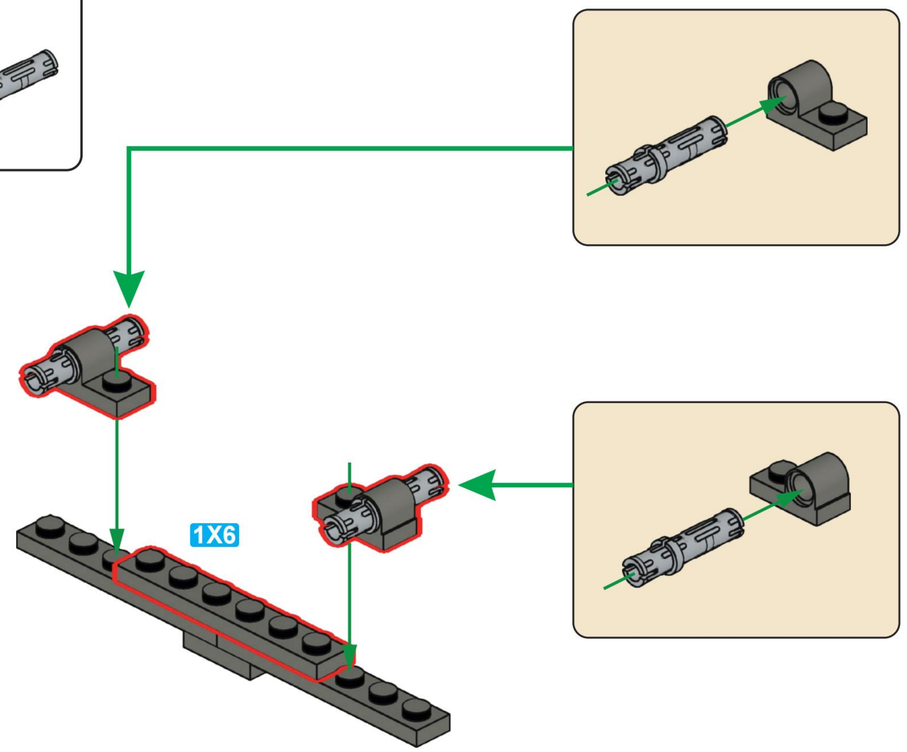

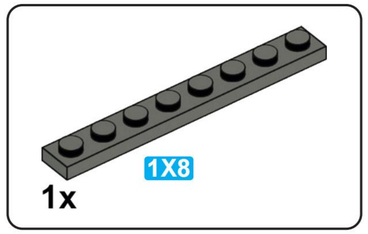

B41

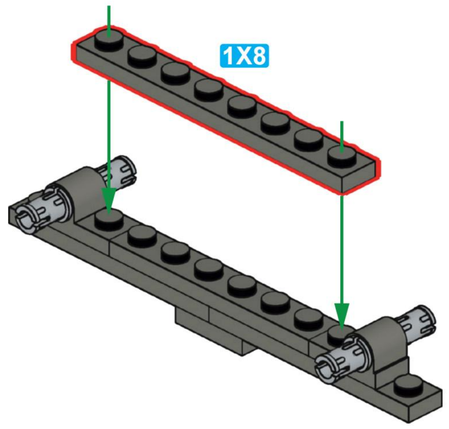

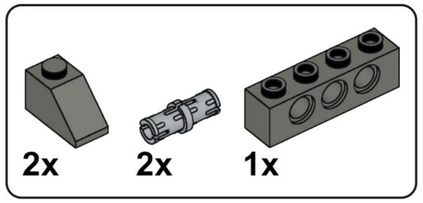

B42

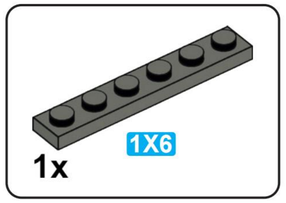

B43

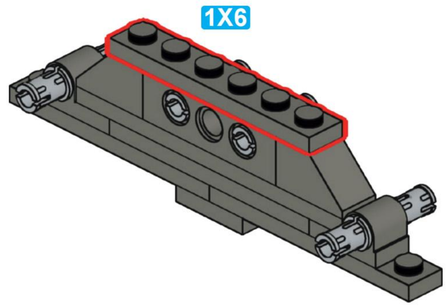

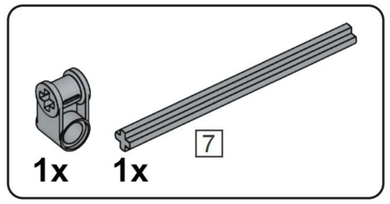

B44

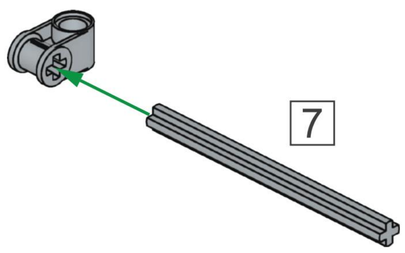

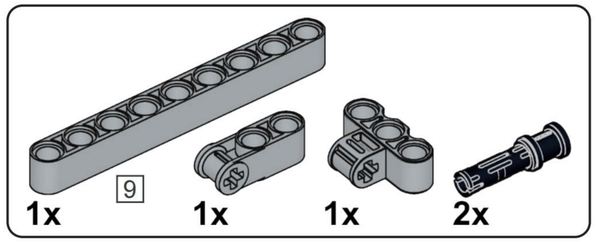

B45

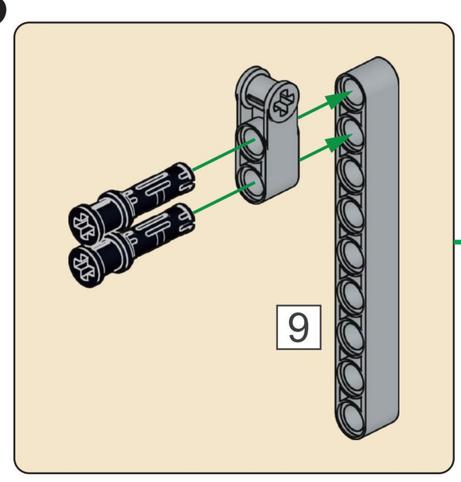

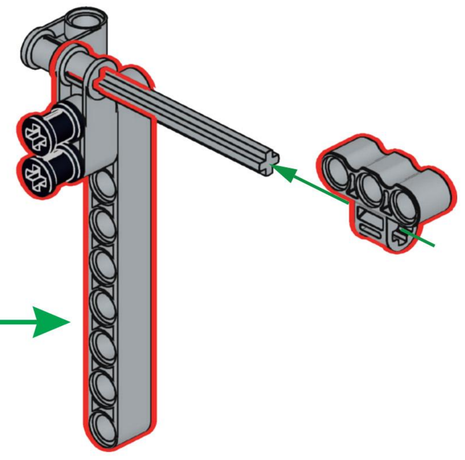

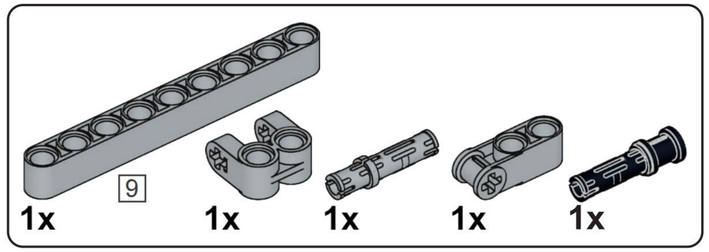

B46

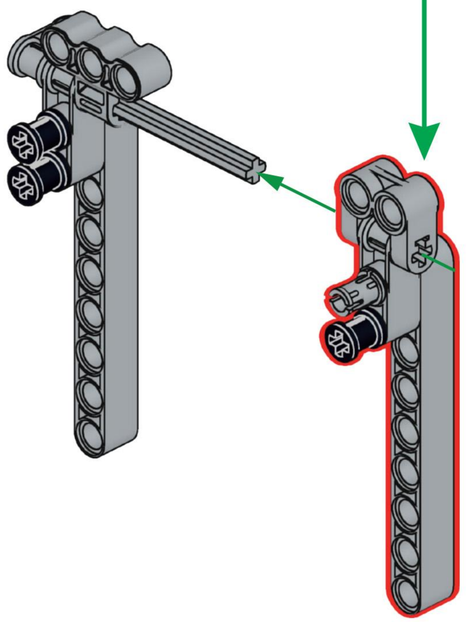

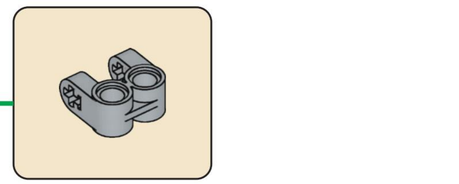

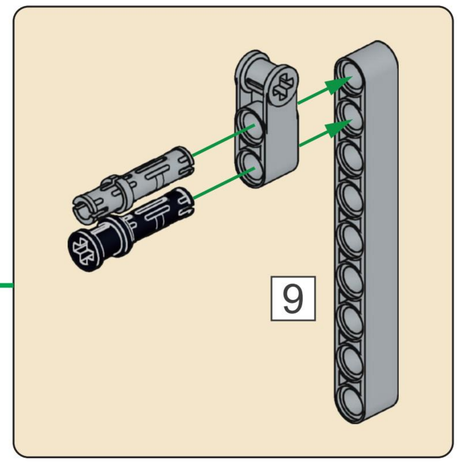

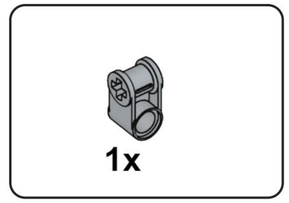

B47

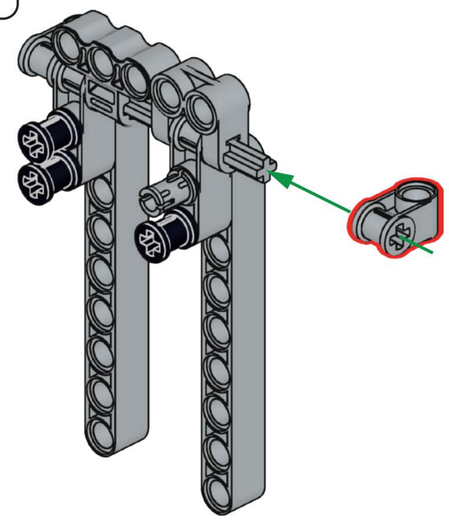

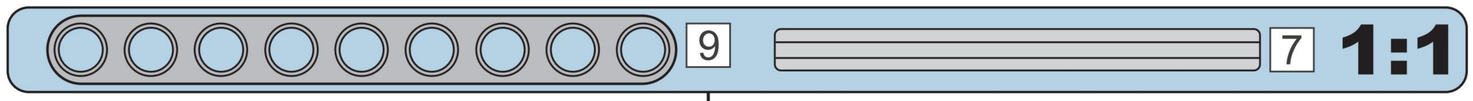

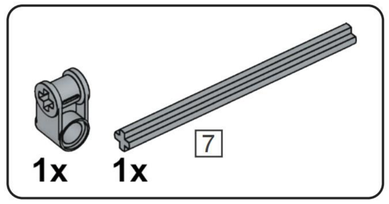

B48

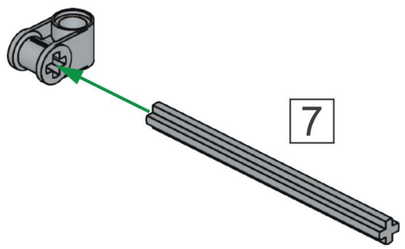

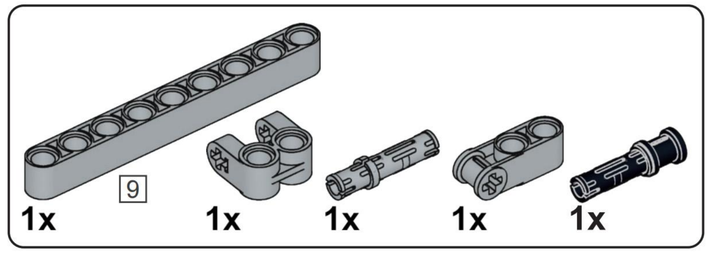

B49

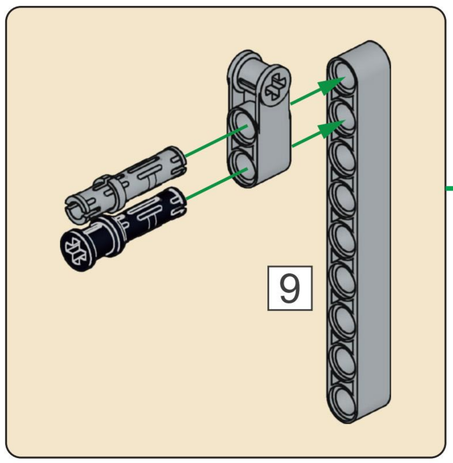

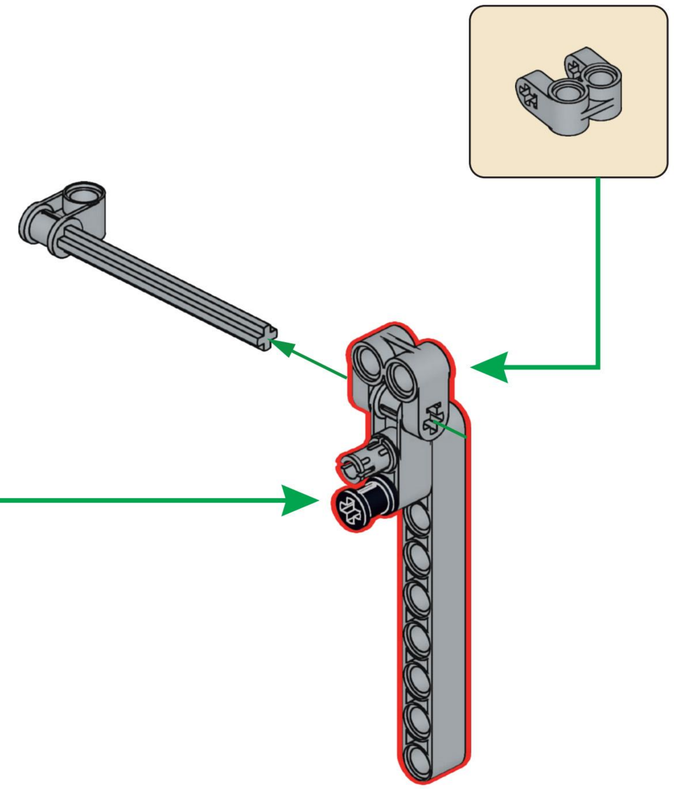

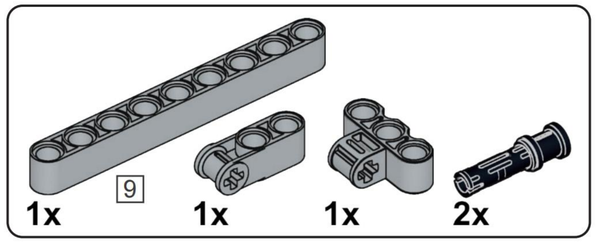

B50

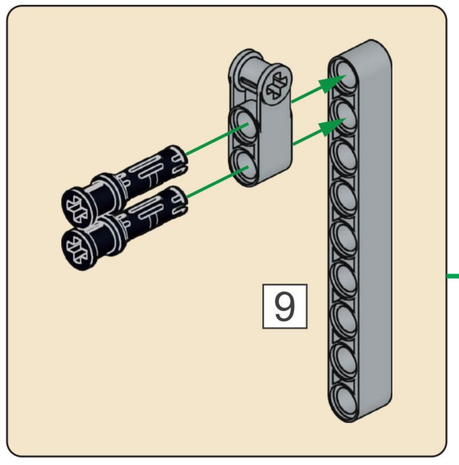

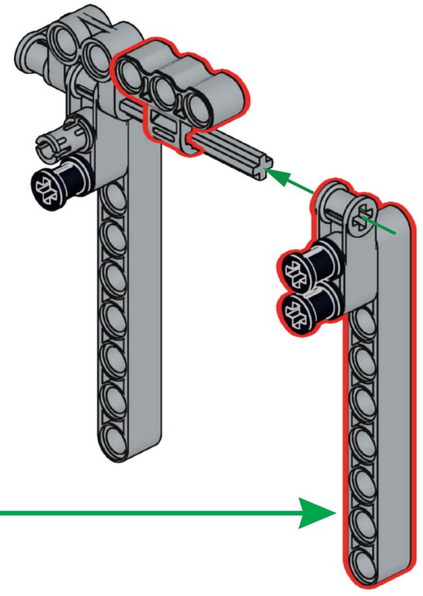

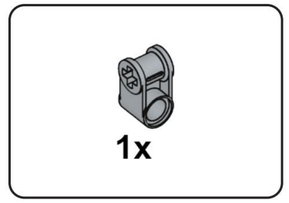

B51

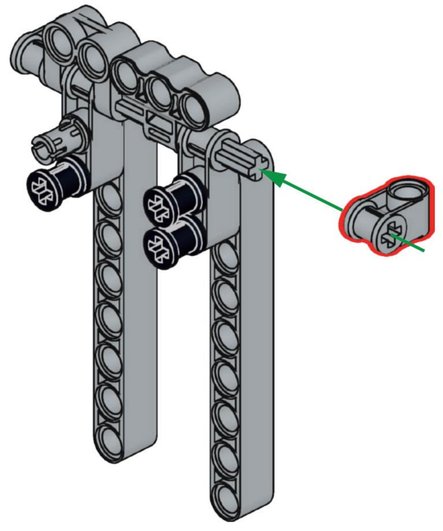

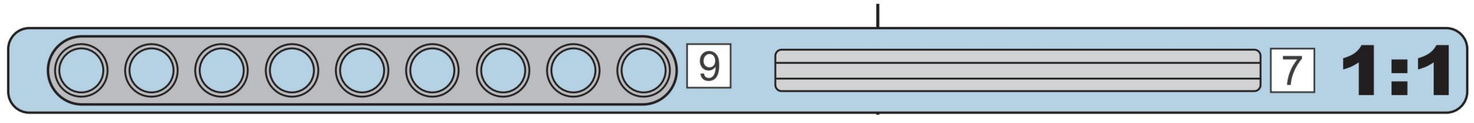

B52

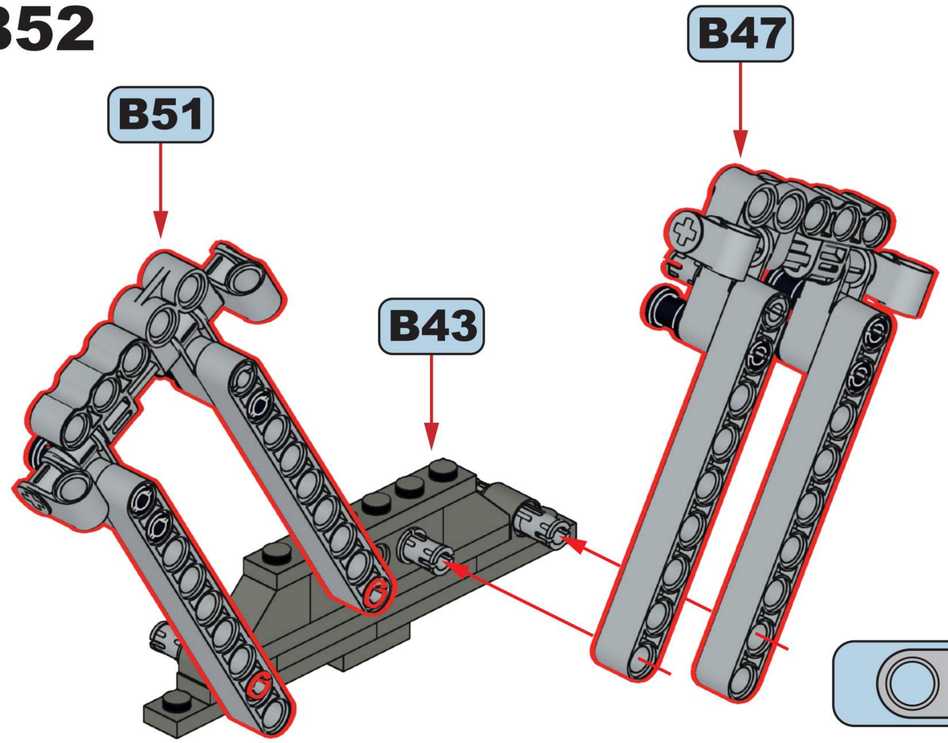

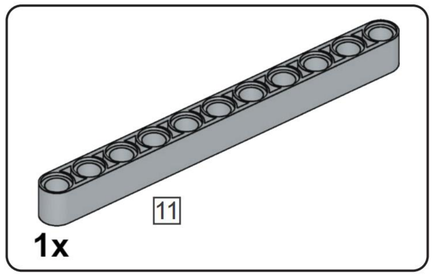

B53

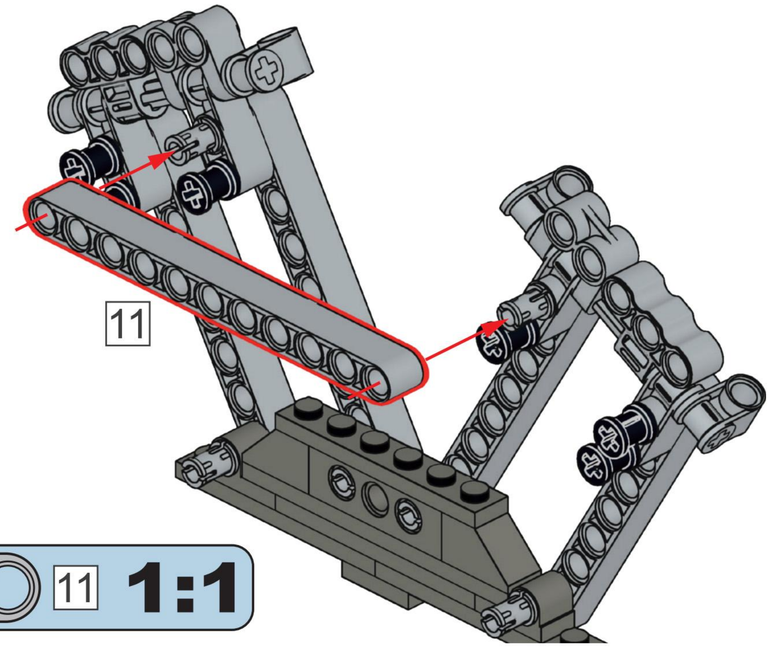

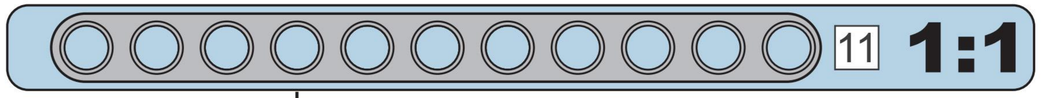

B54

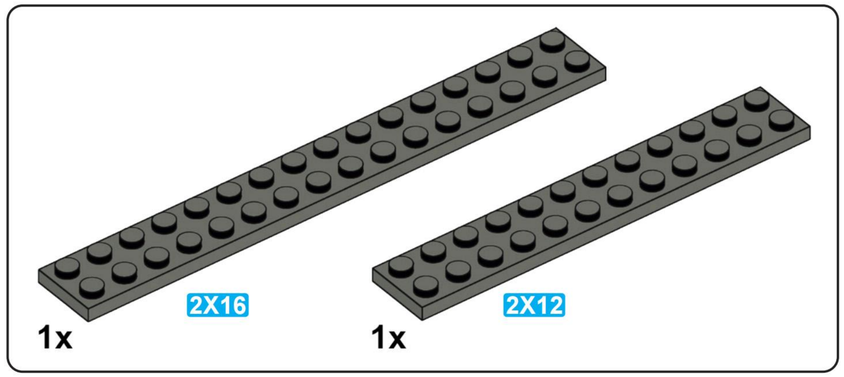

B55

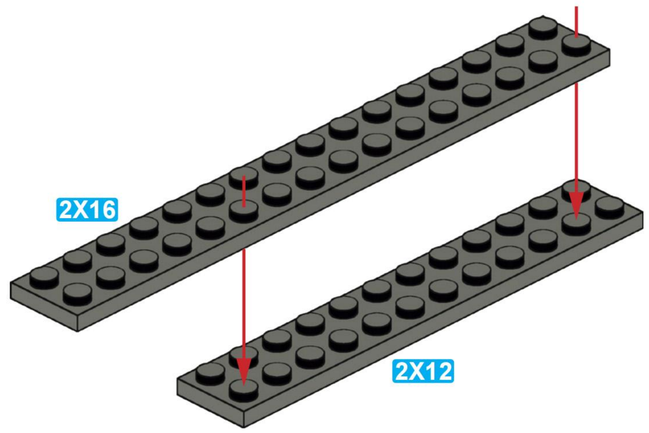

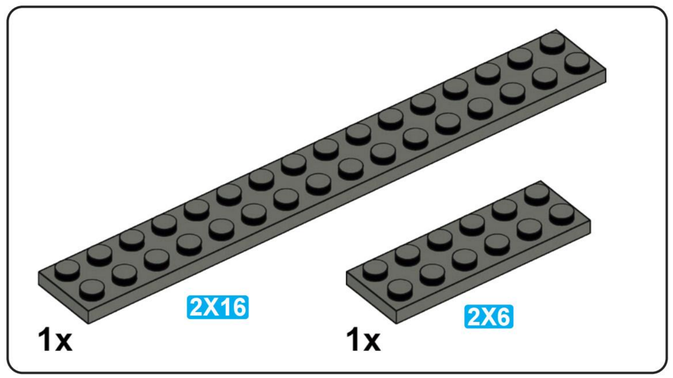

B56

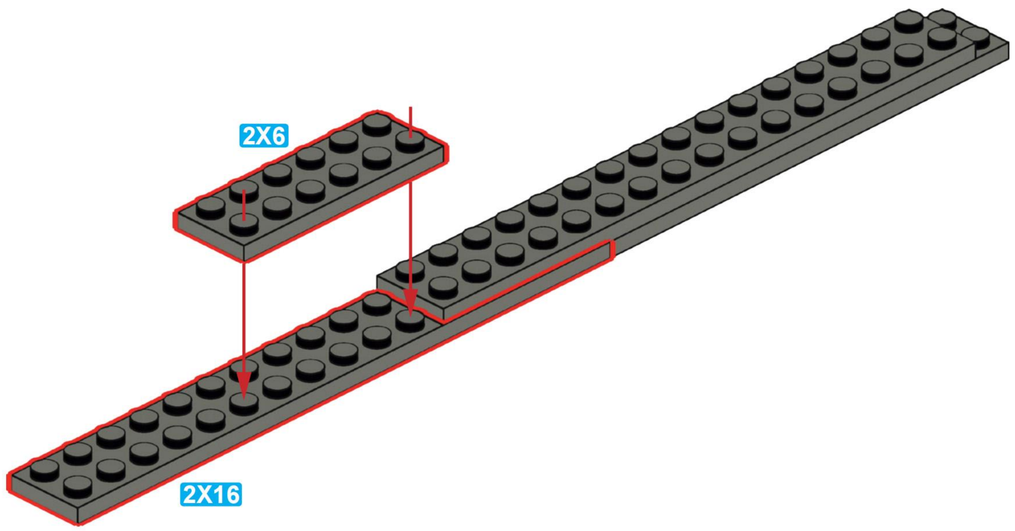

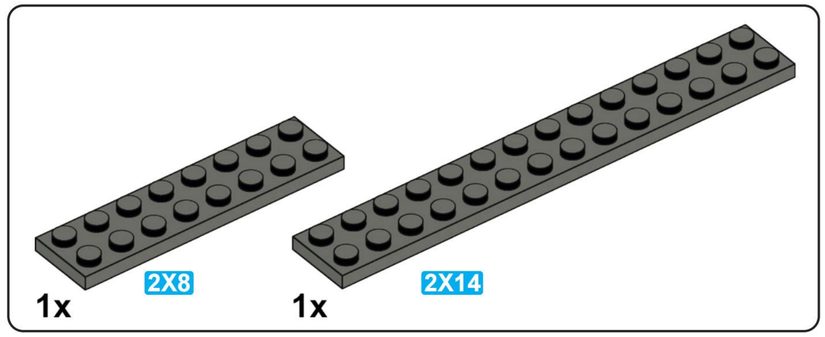

B57

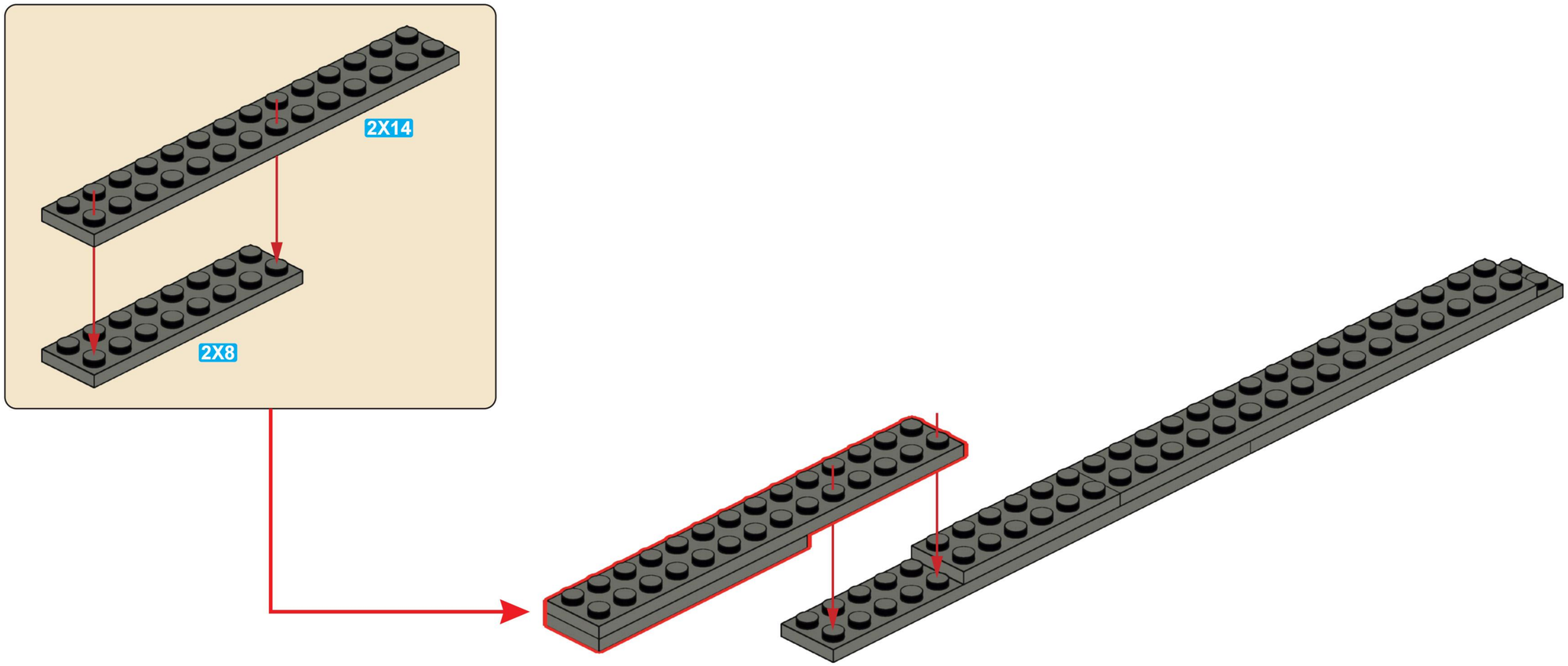

B58

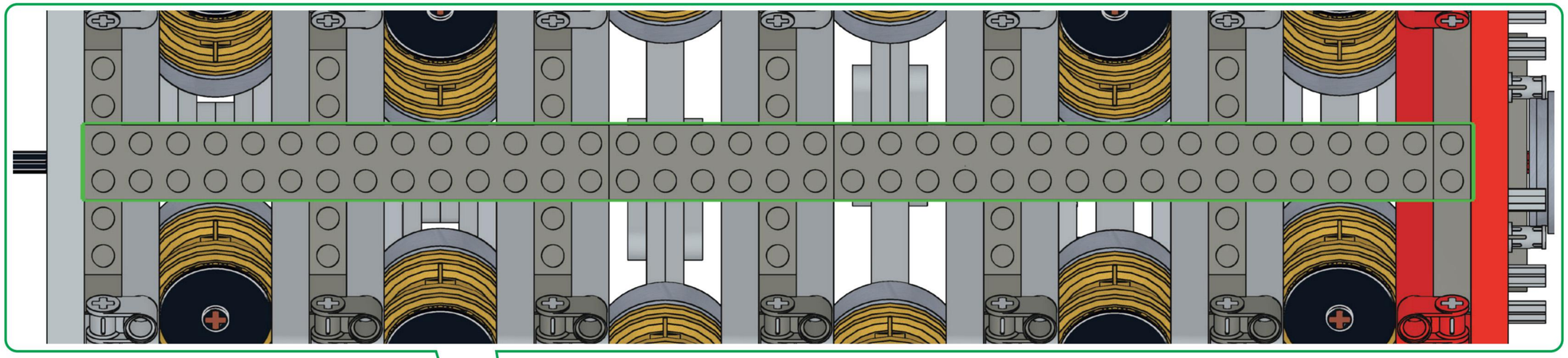

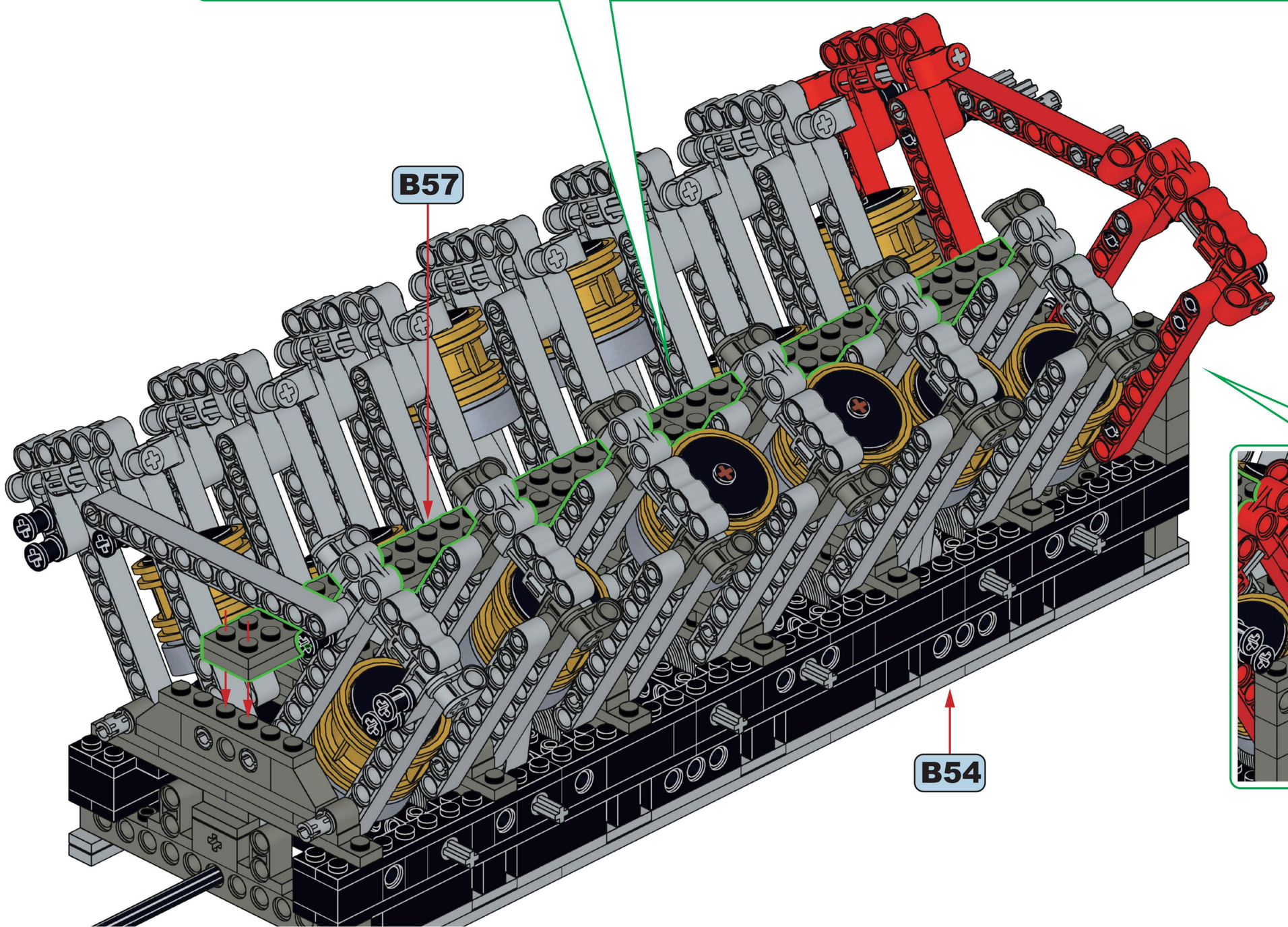

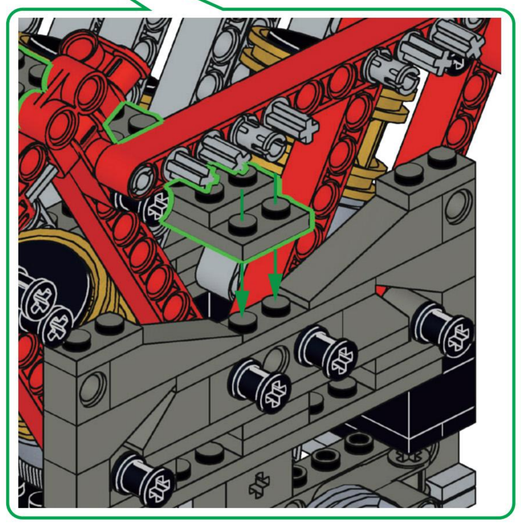

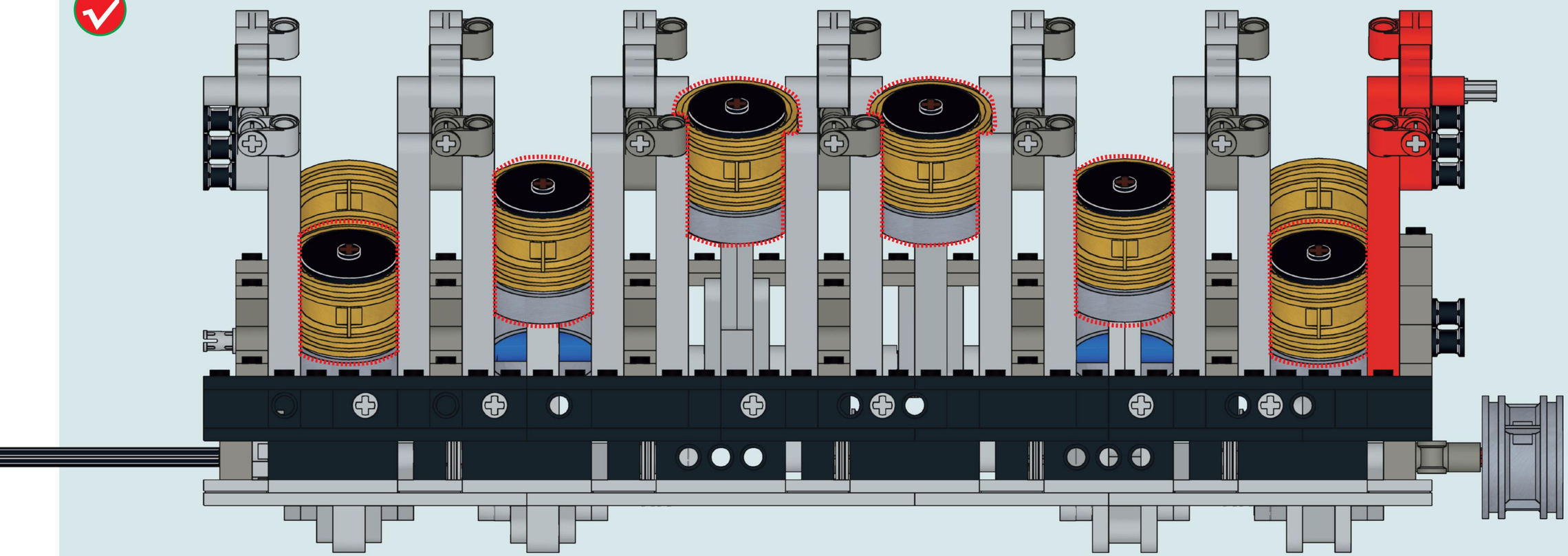

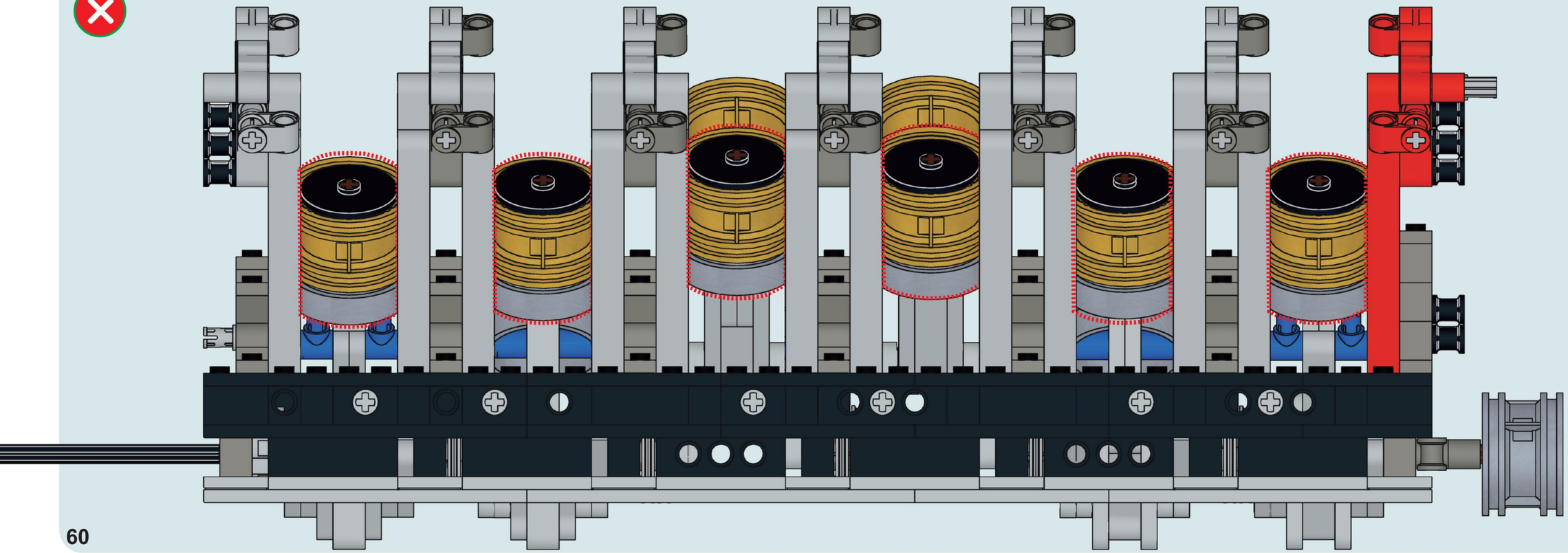

3

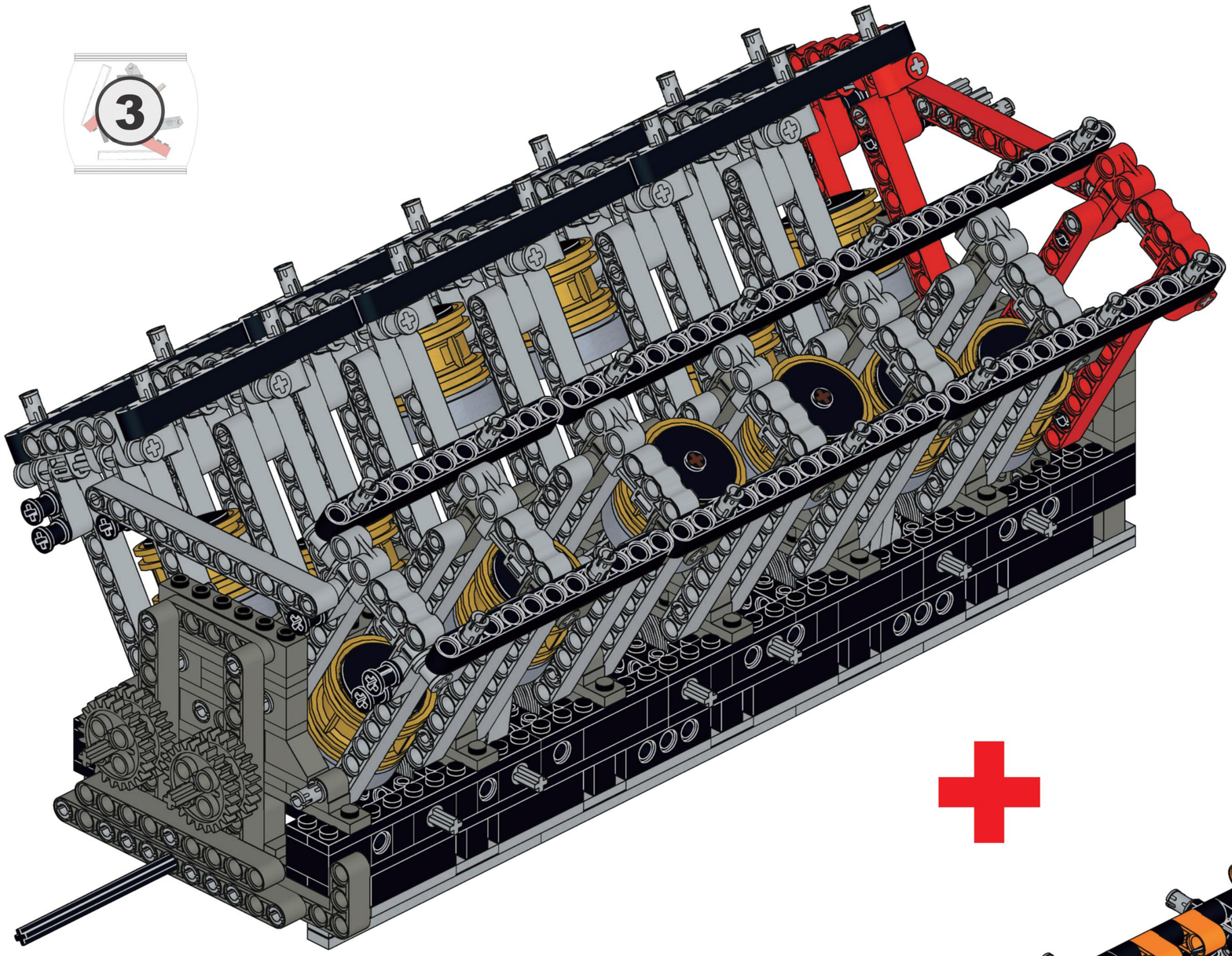

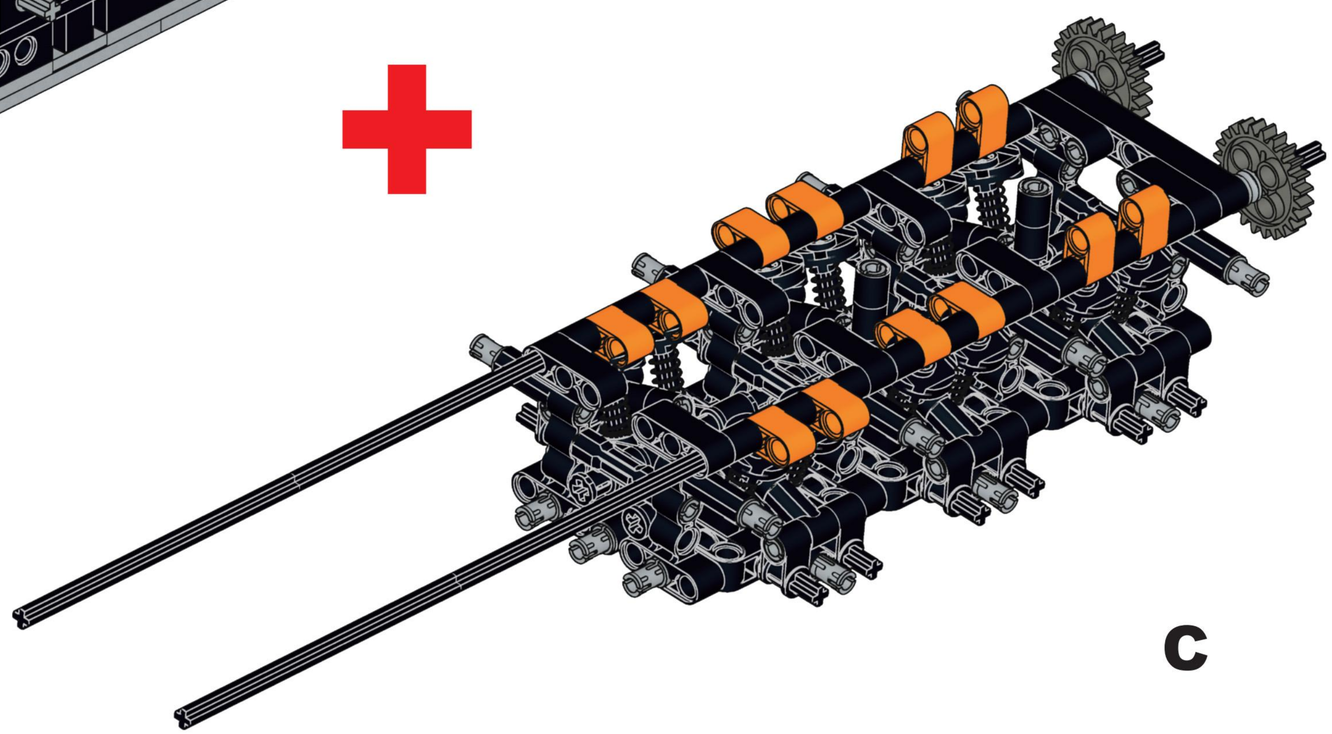

C

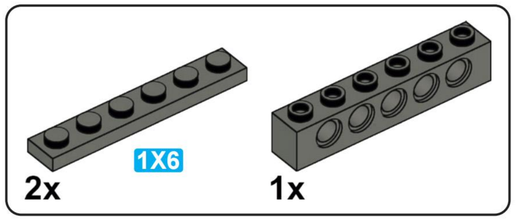

C1

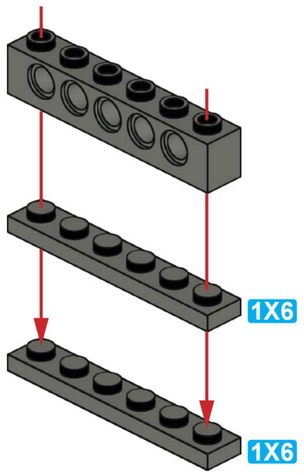

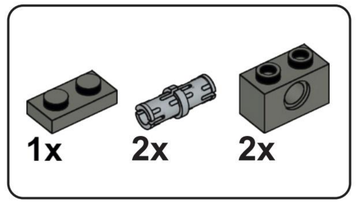

C2

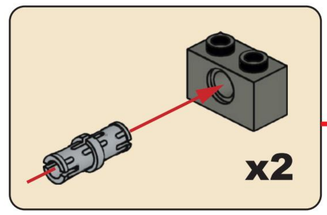

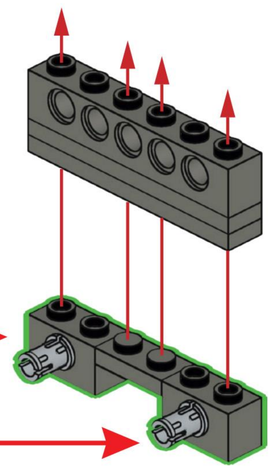

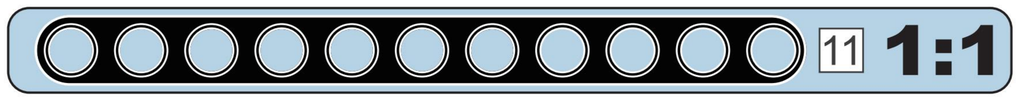

C3

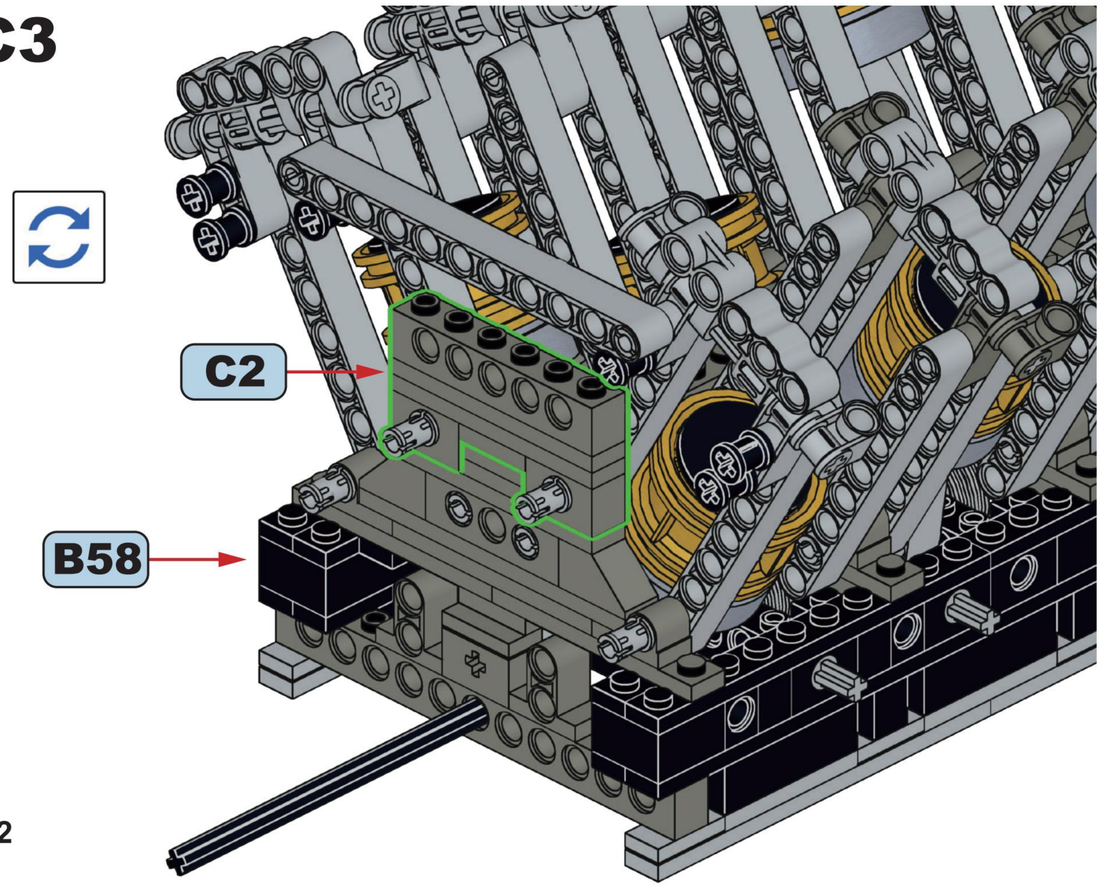

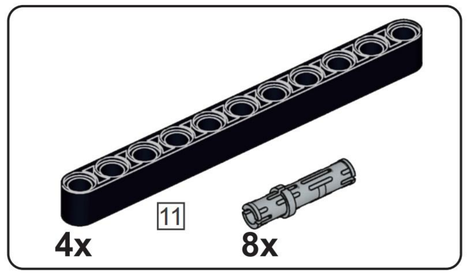

C4

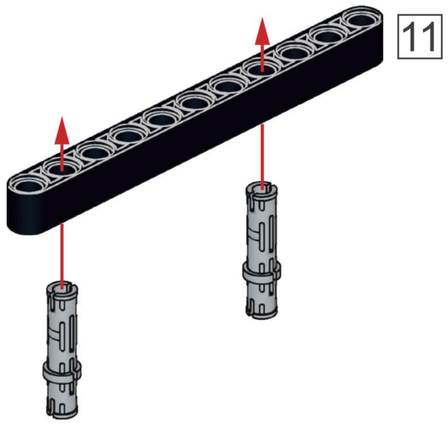

x4

C5

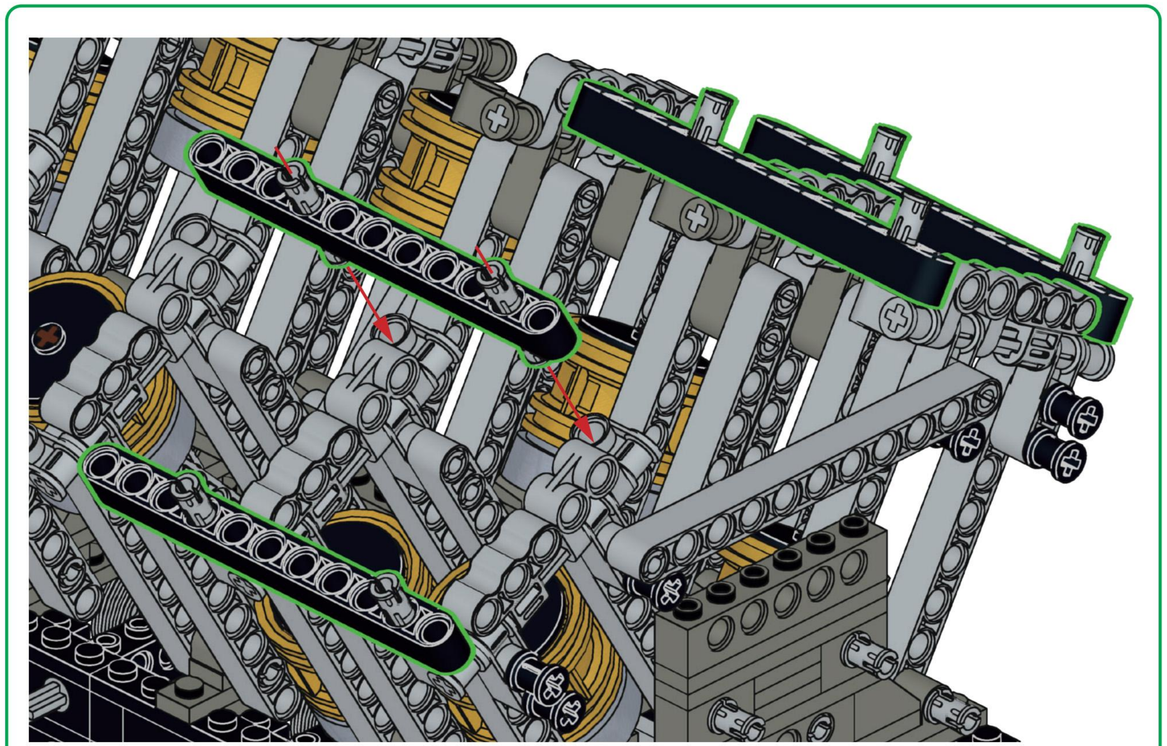

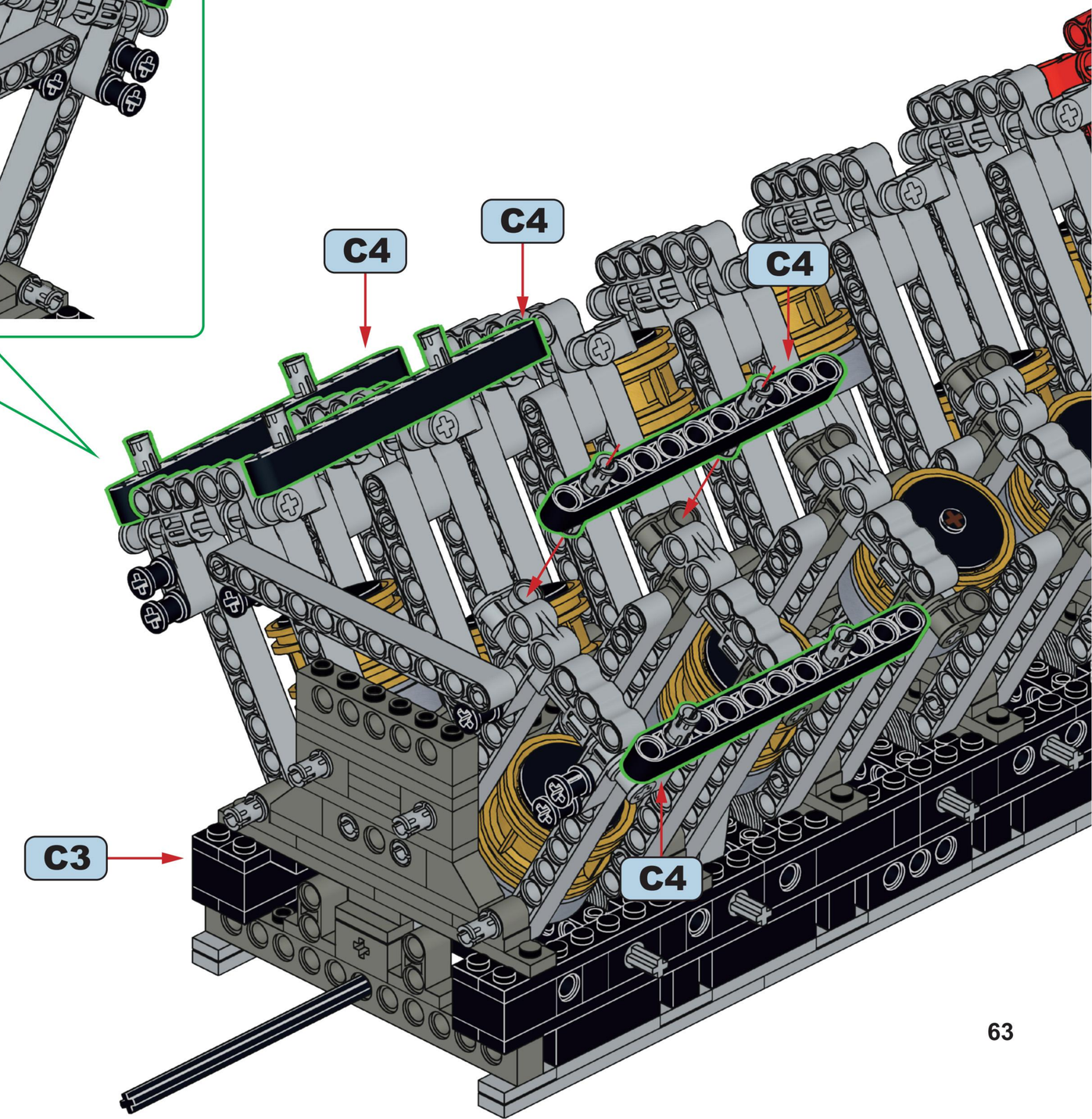

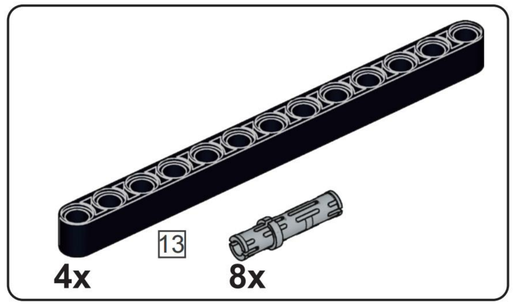

C6

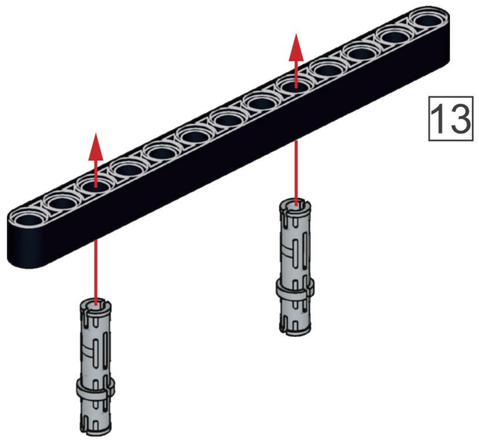

x4

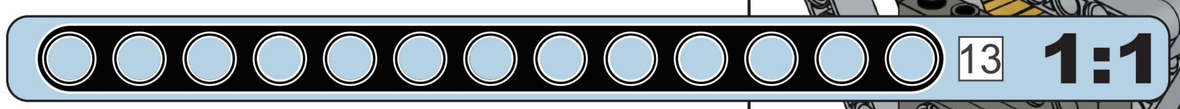

C7

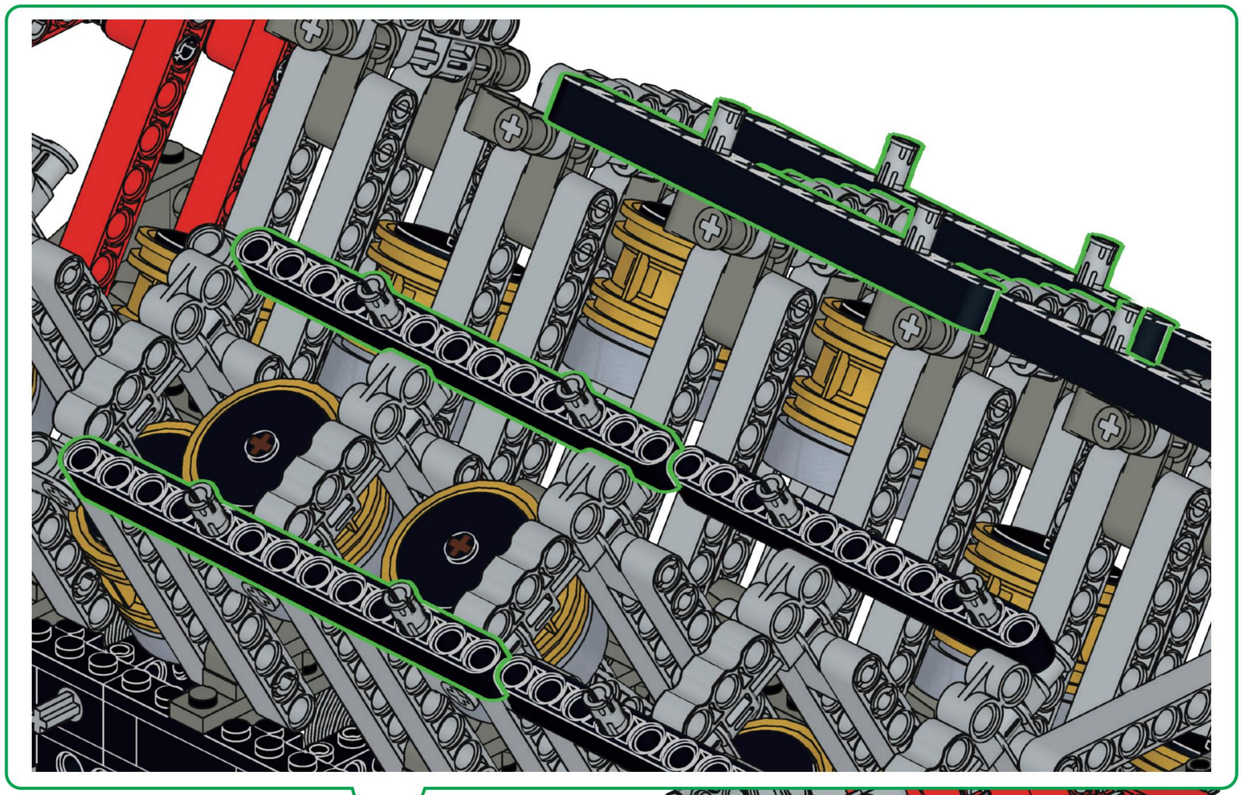

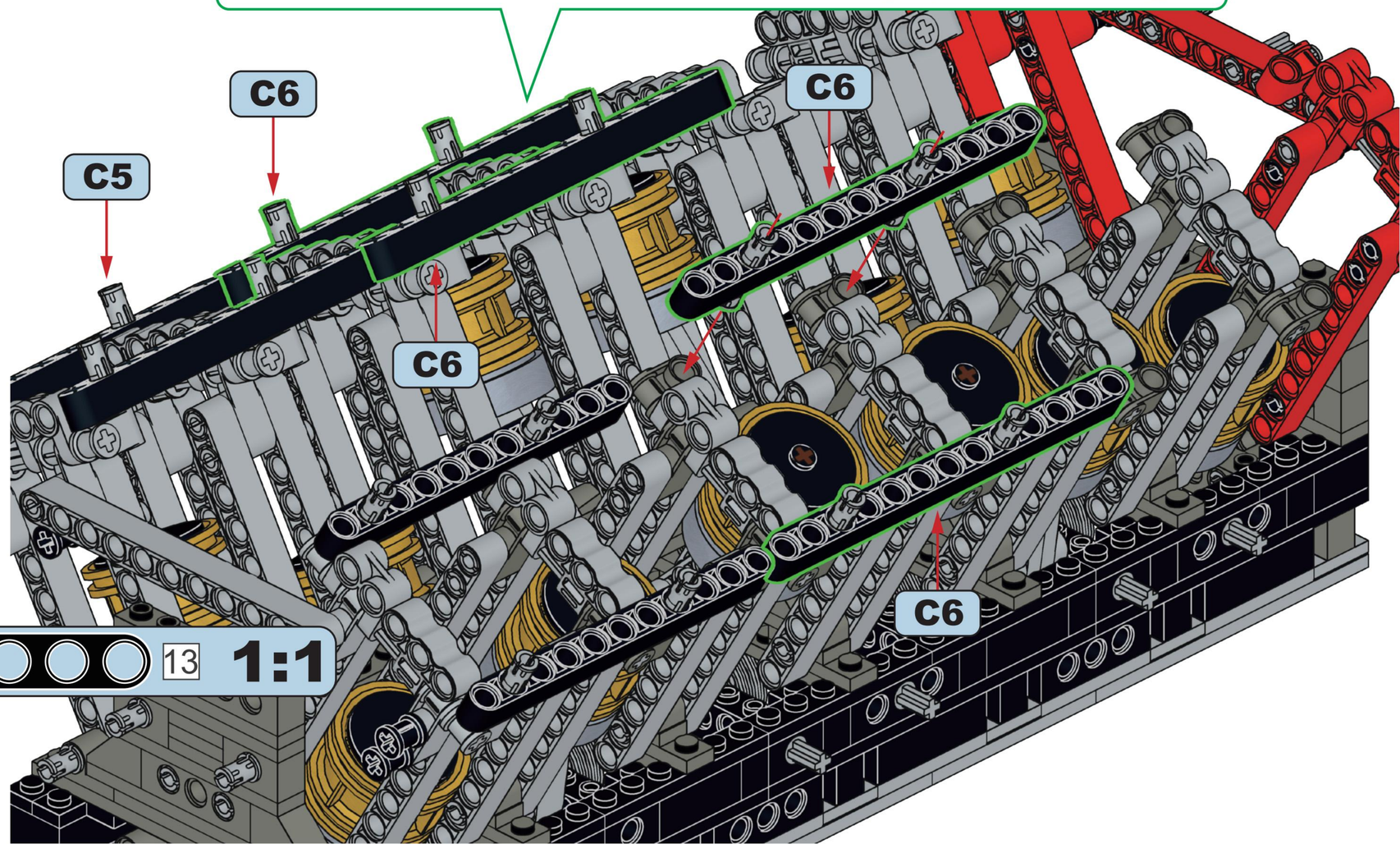

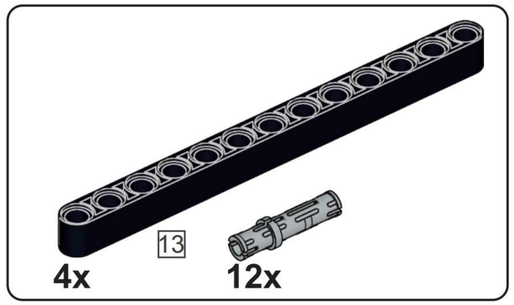

C8

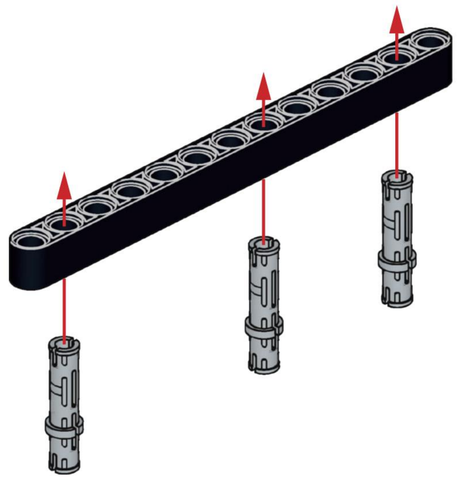

x4

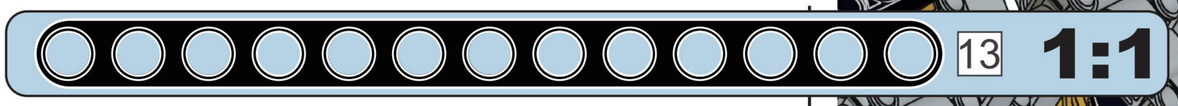

C9

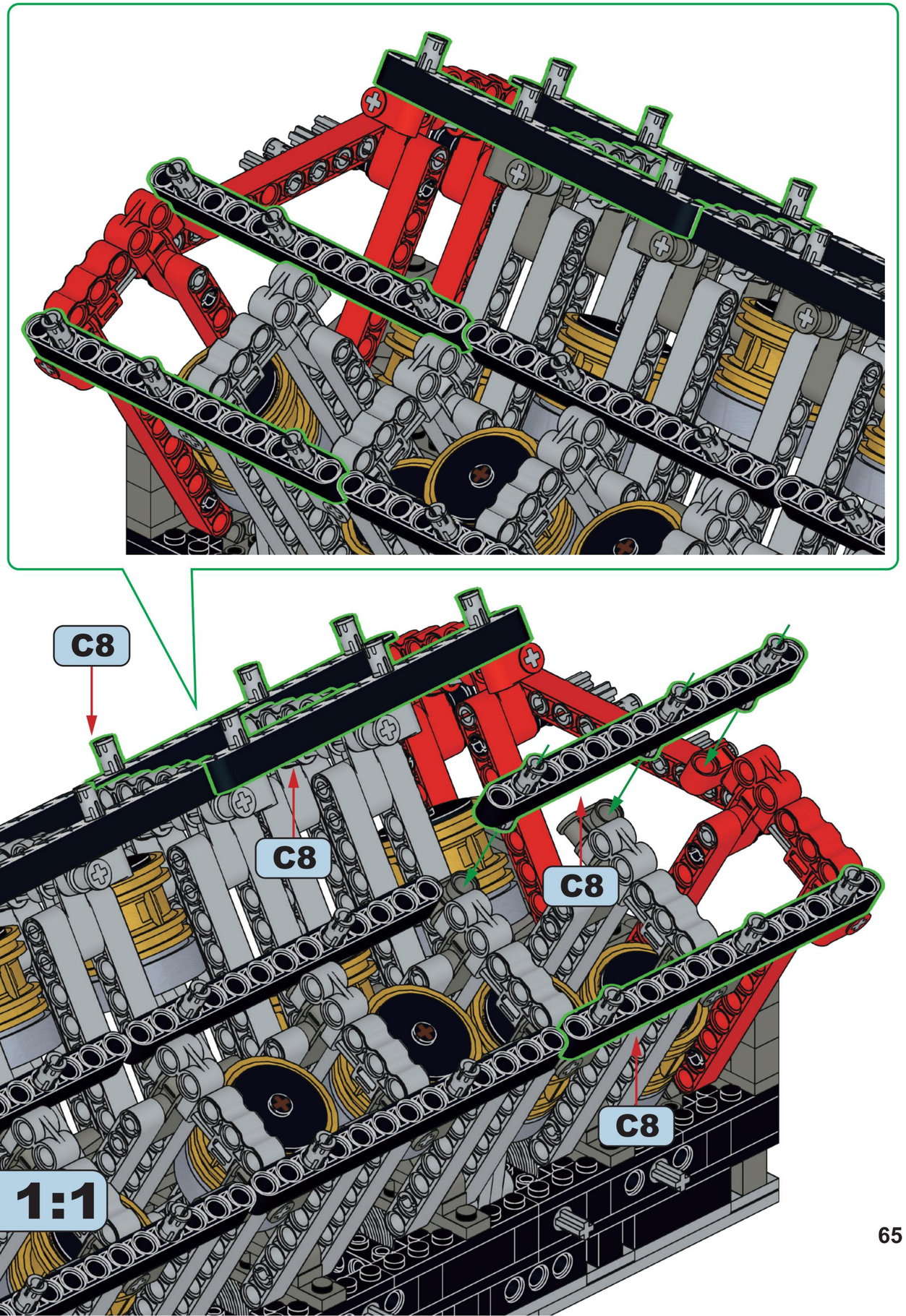

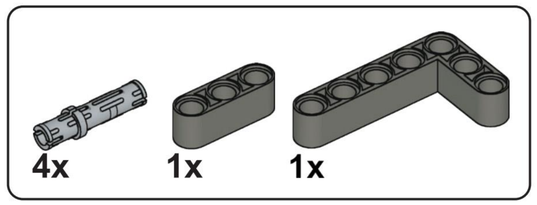

C10

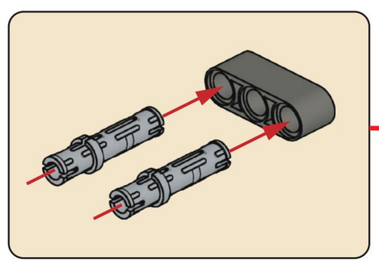

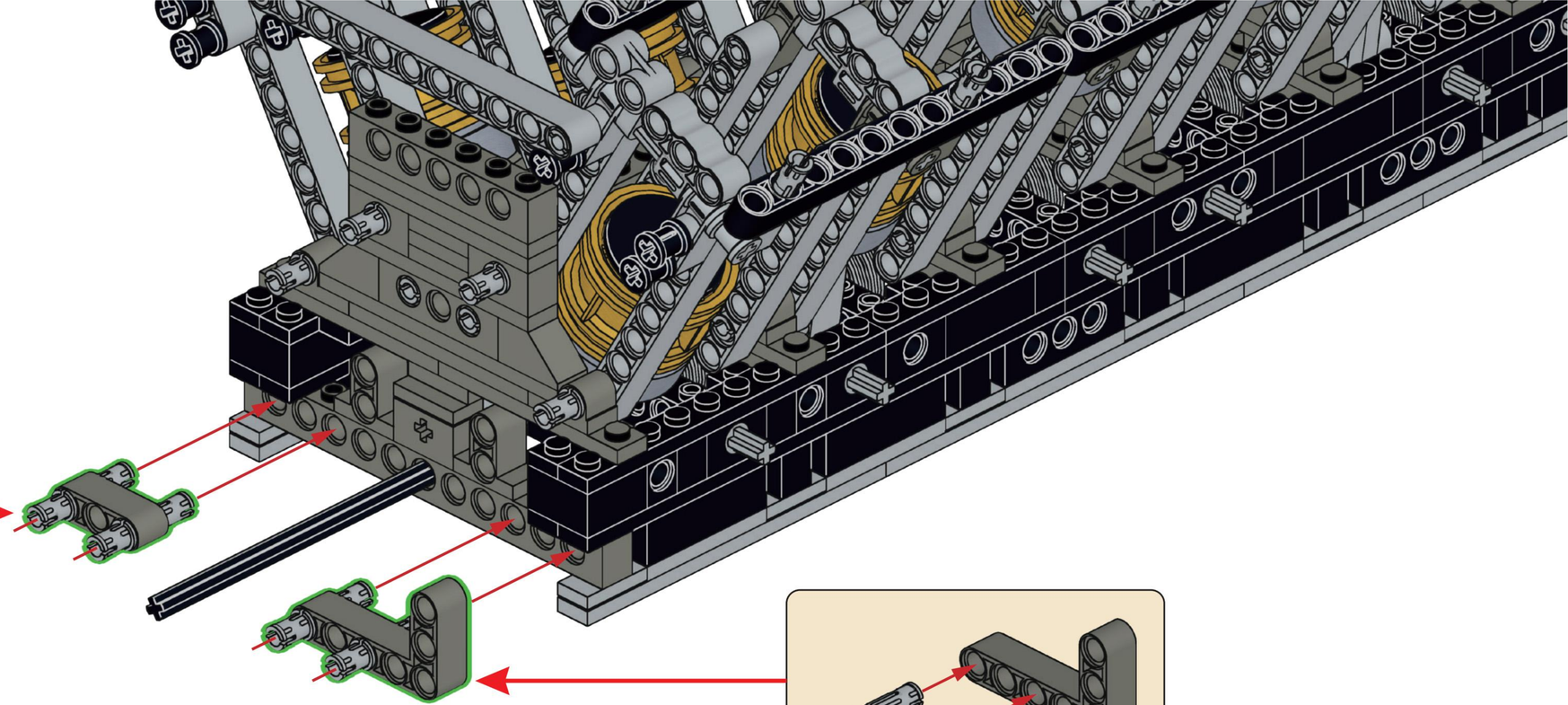

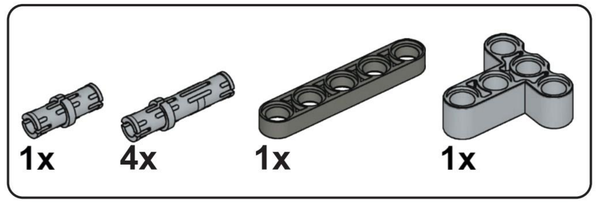

C11

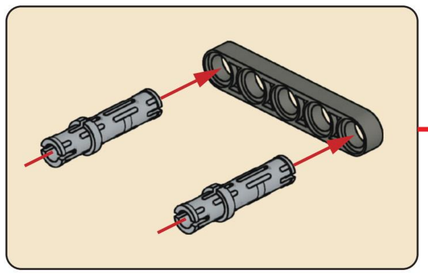

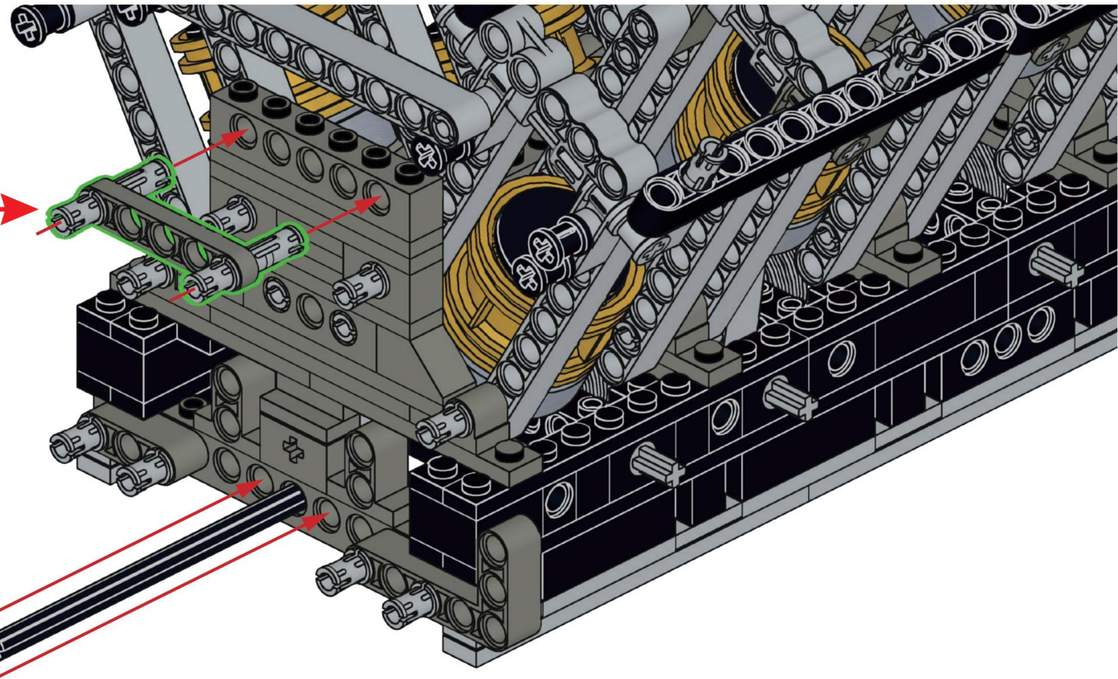

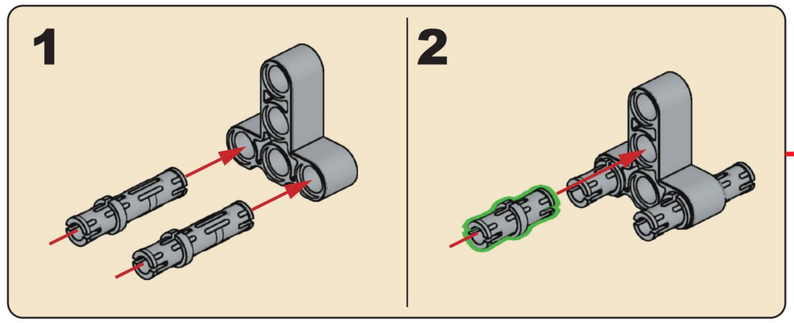

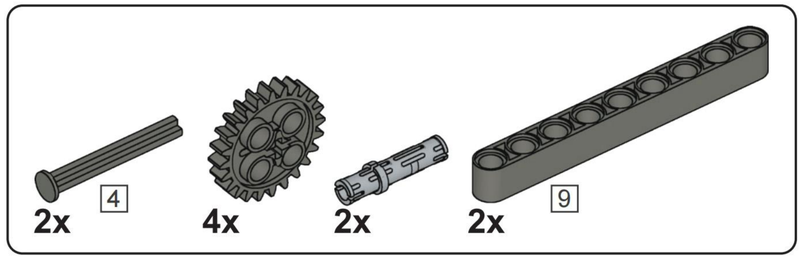

C12

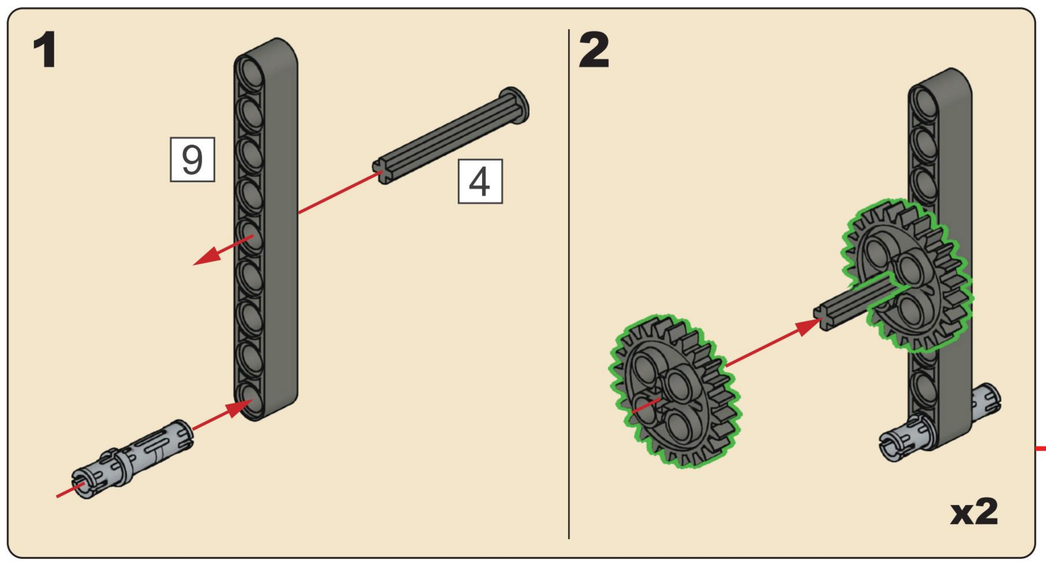

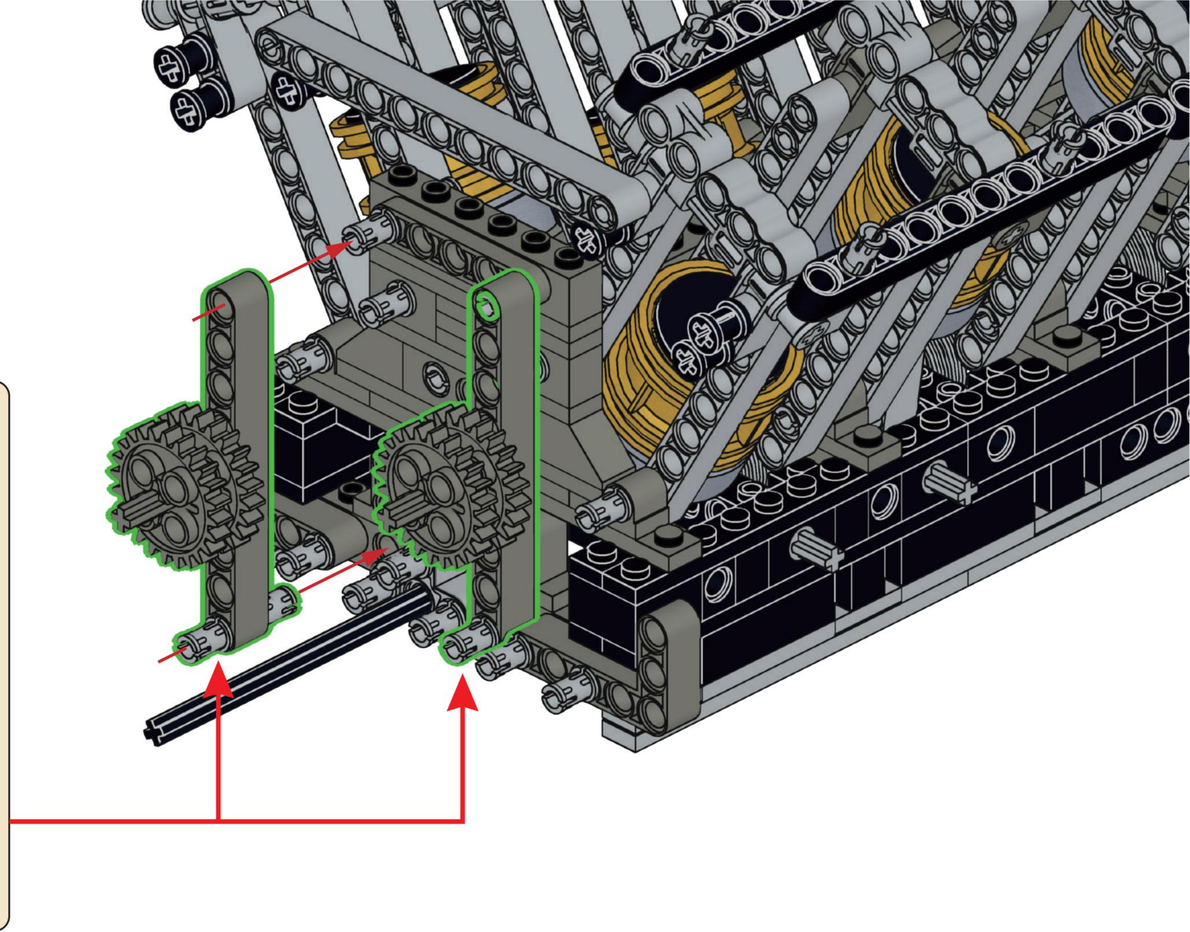

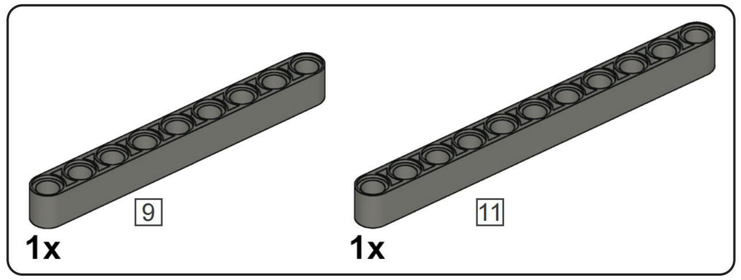

C13

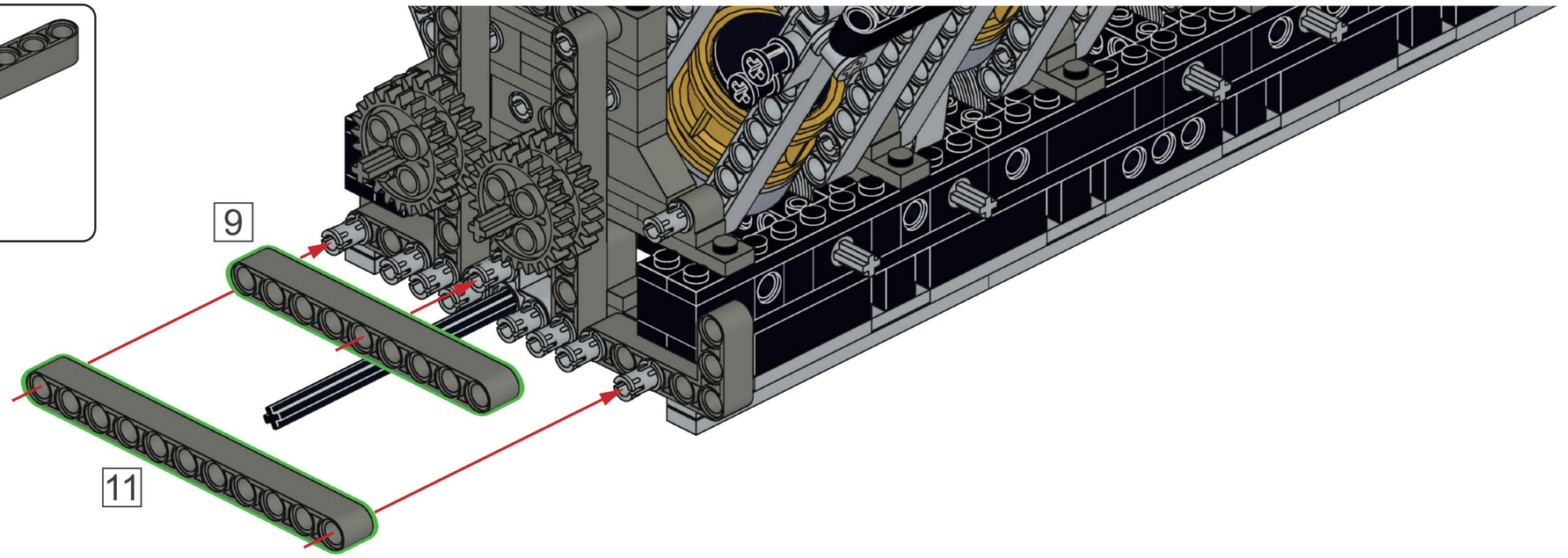

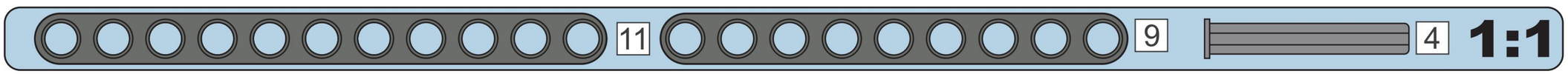

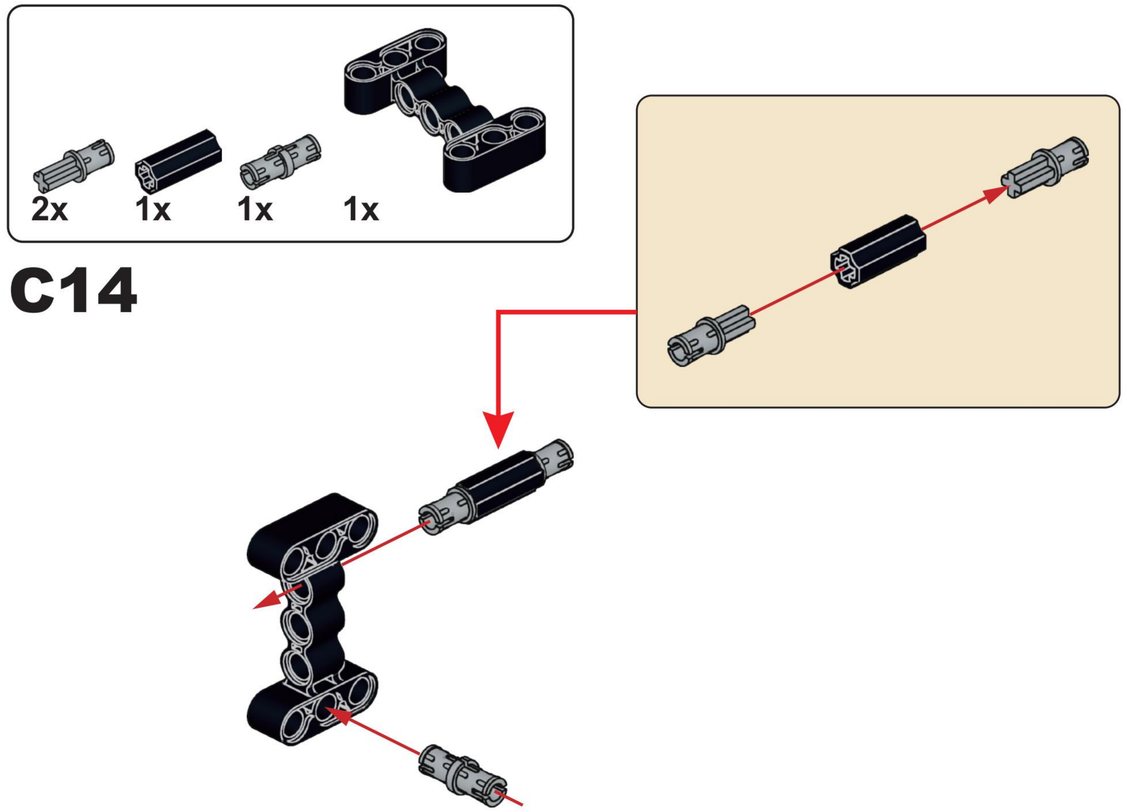

C14

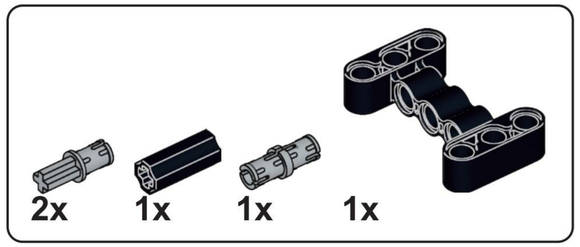

C15

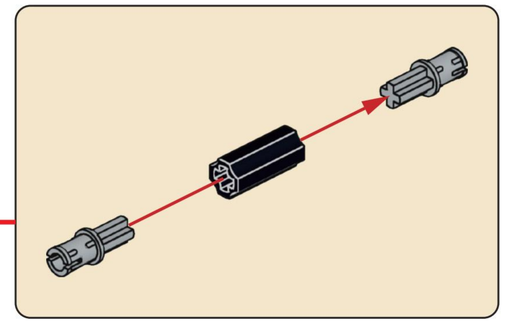

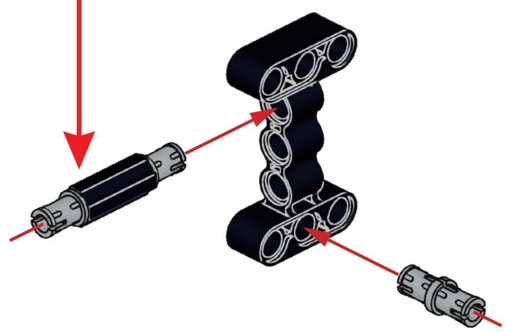

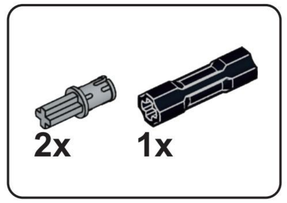

C16

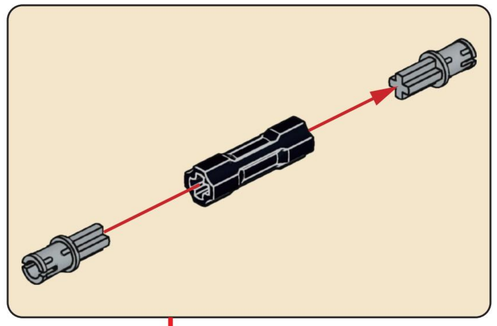

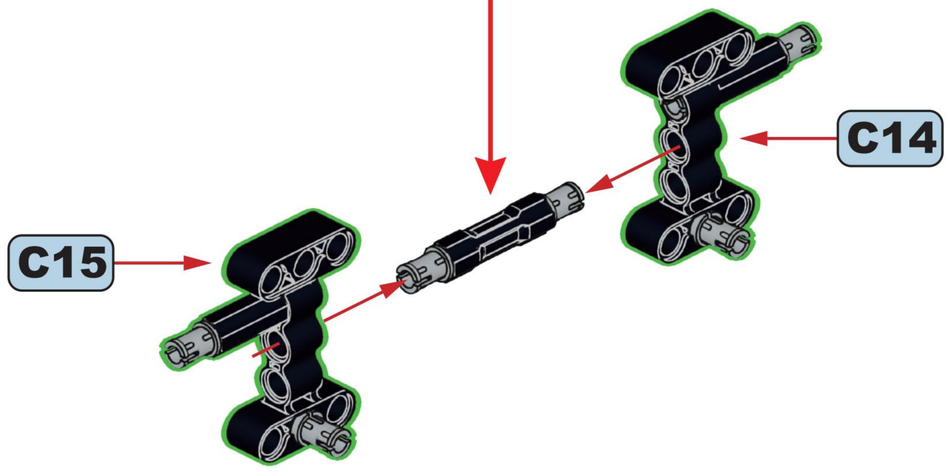

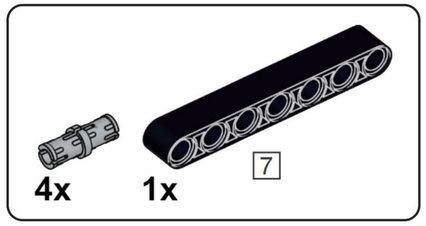

C17

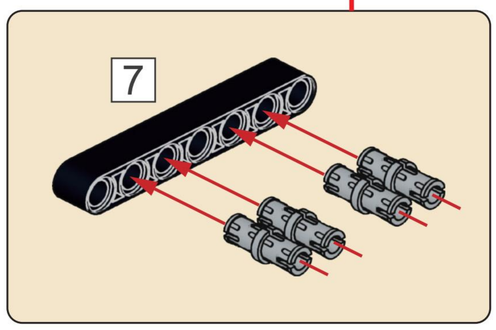

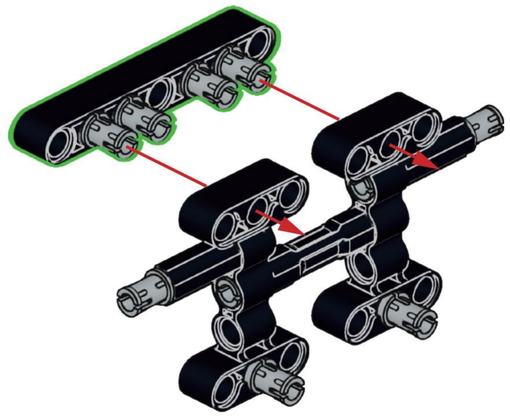

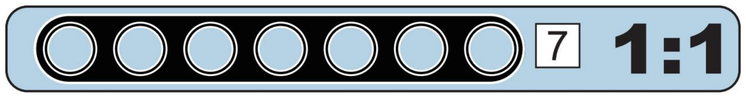

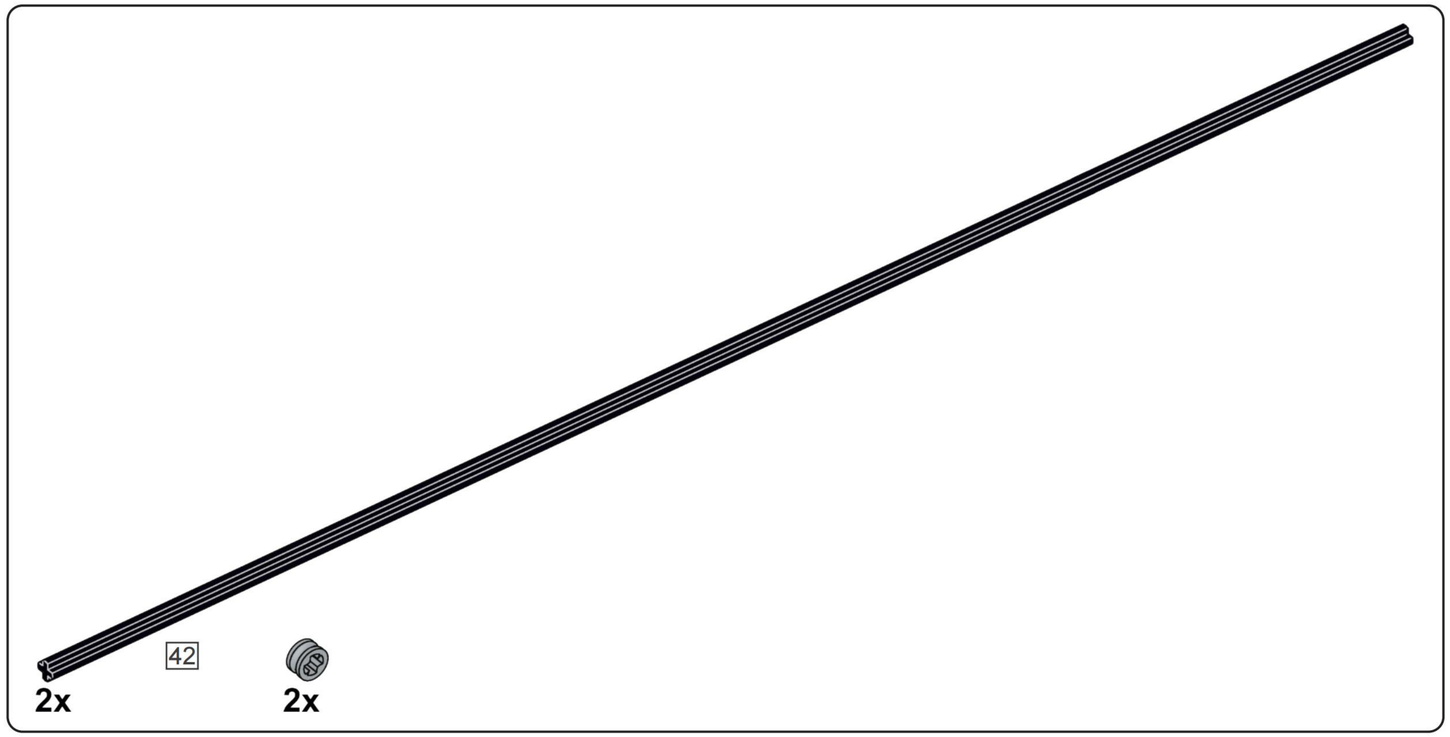

C18

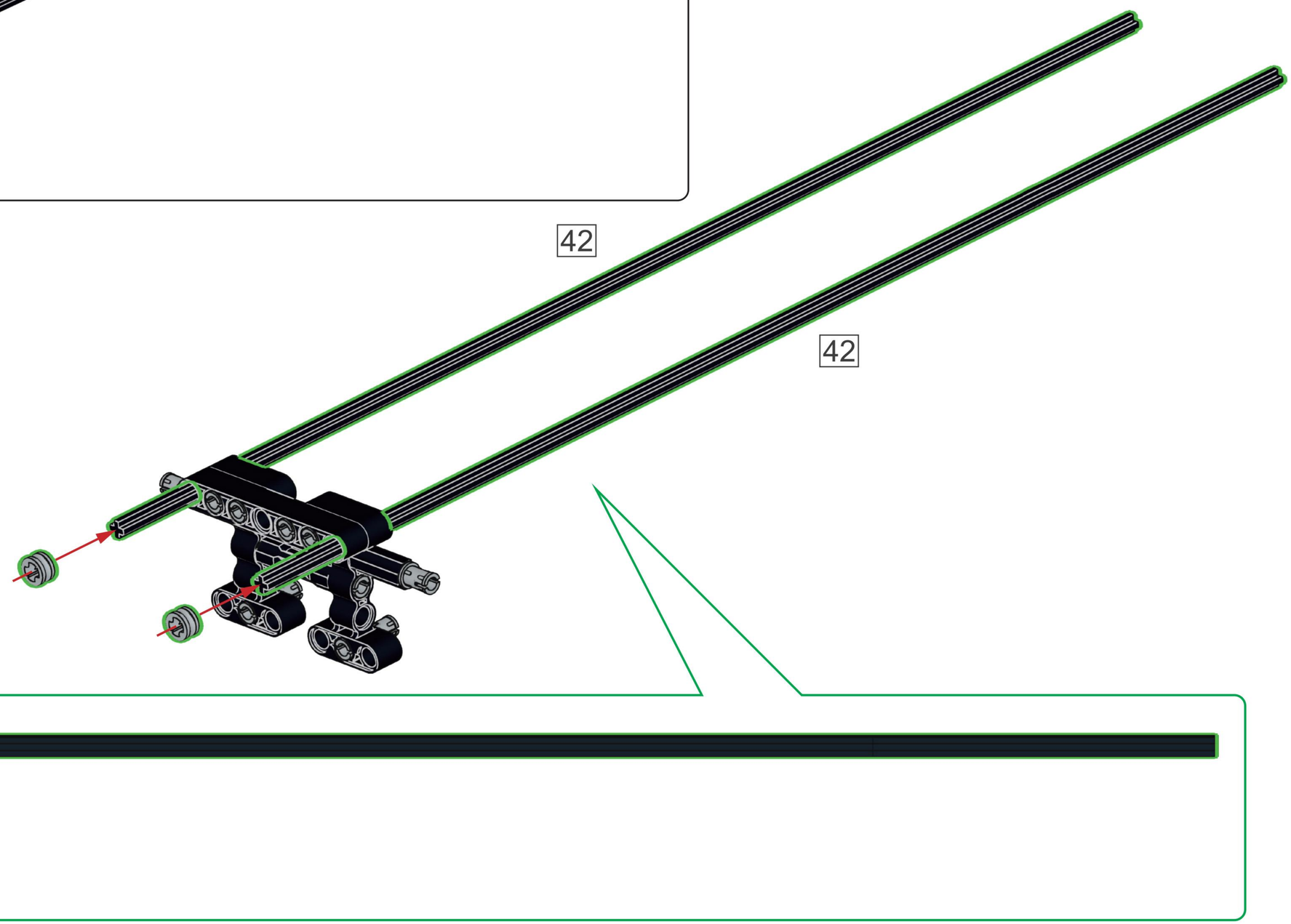

2x

C19

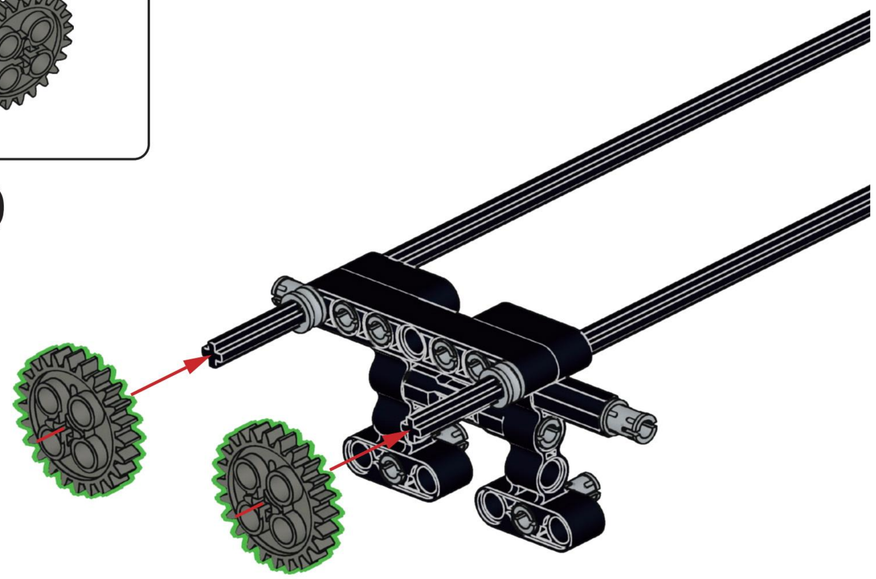

3x 12x

C20

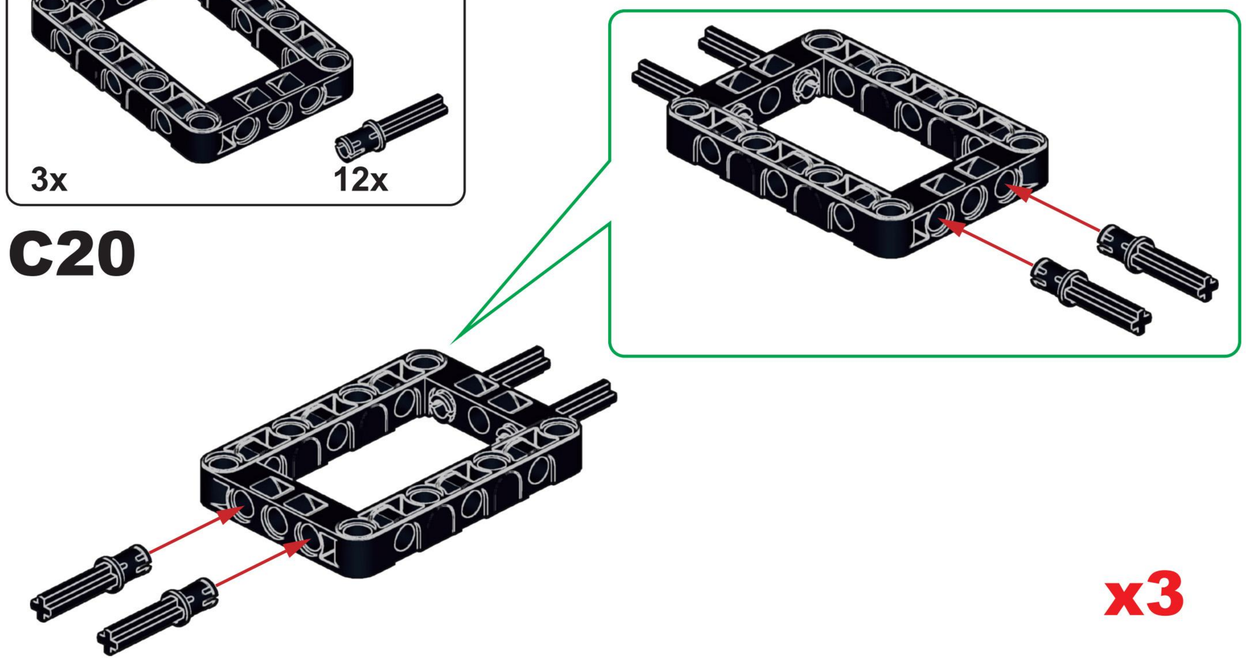

x3

9x 9x

C21

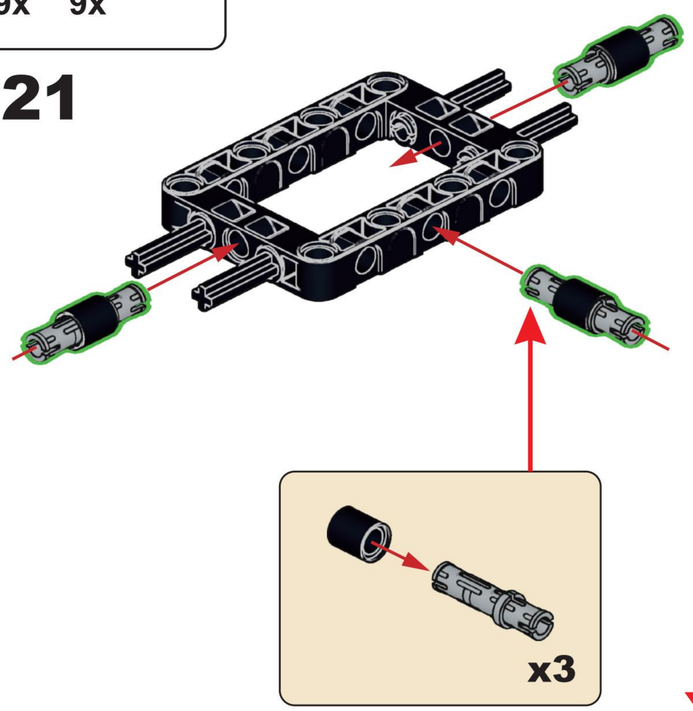

x3

x3

1x 1x 6

C22

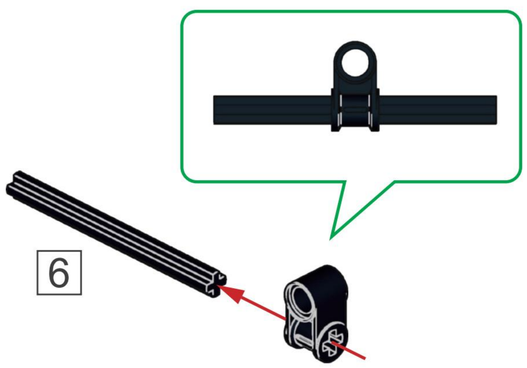

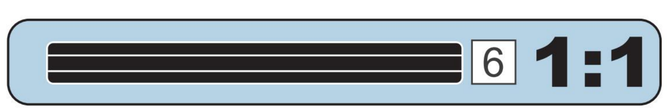

2x

C23

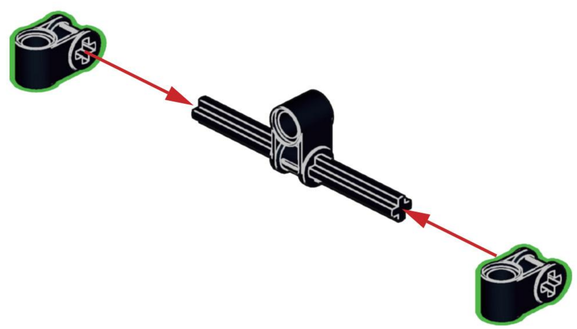

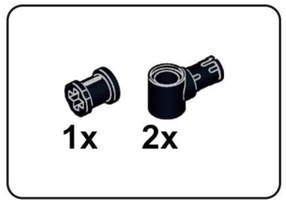

C24



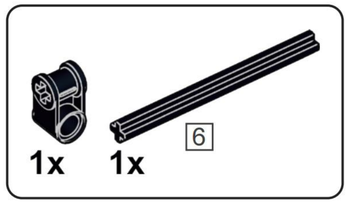

C25

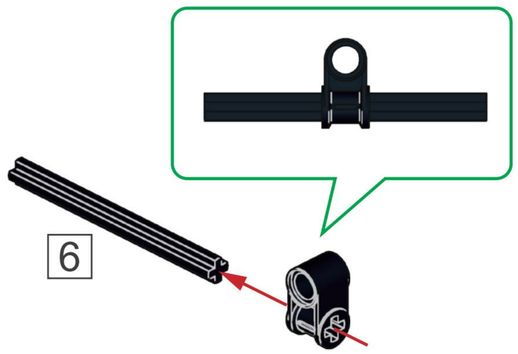



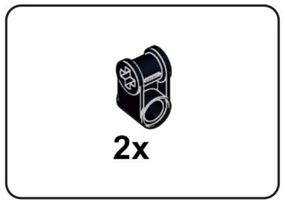

C26

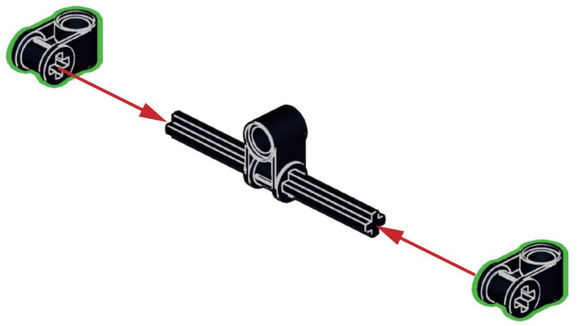

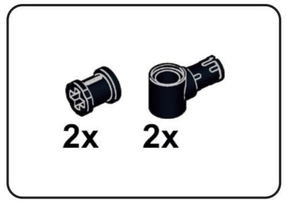

C27

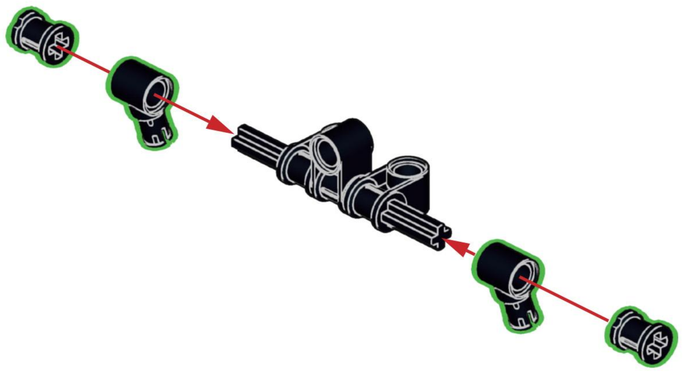

C28

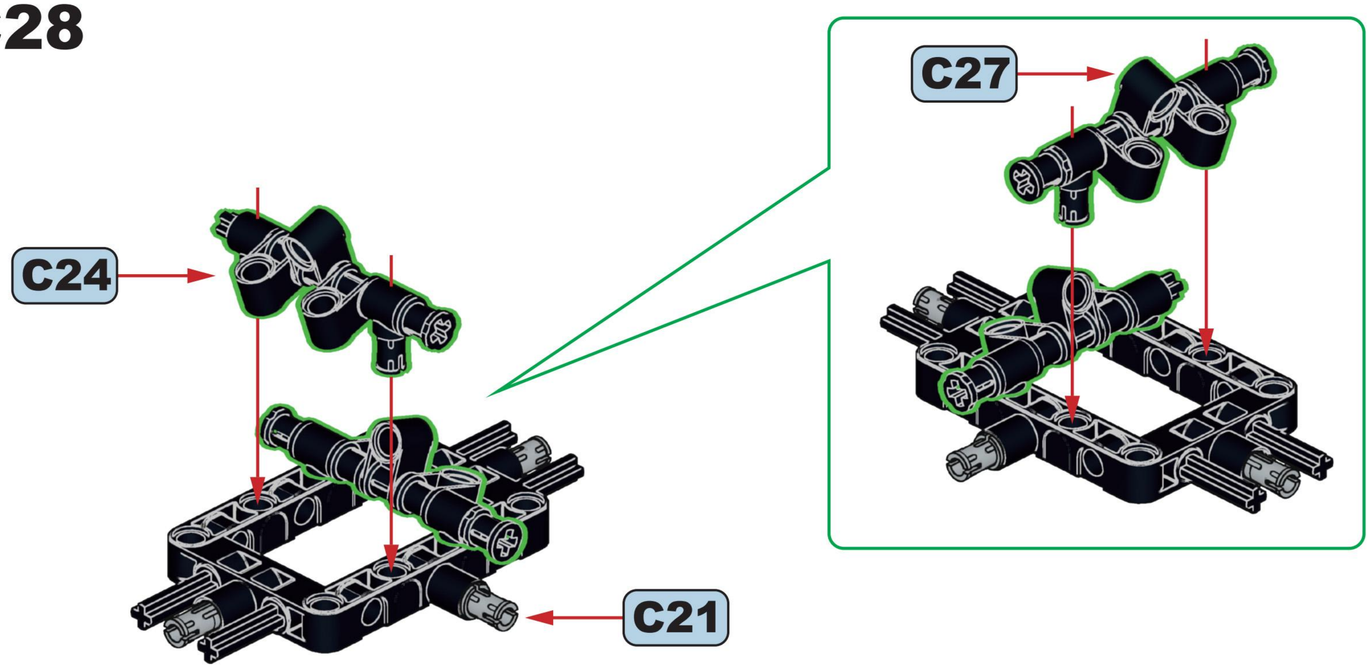

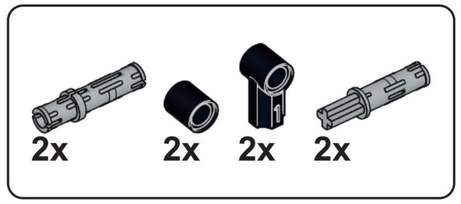

C29

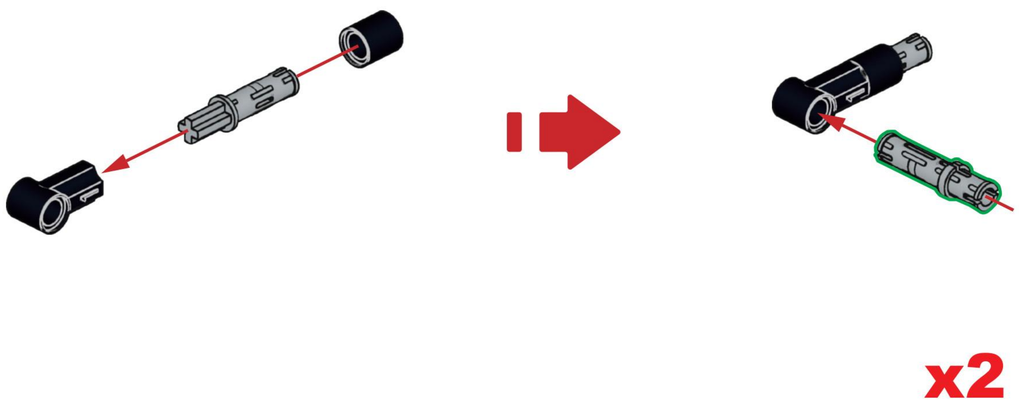

x2

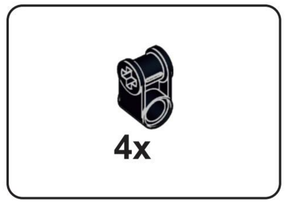

C30

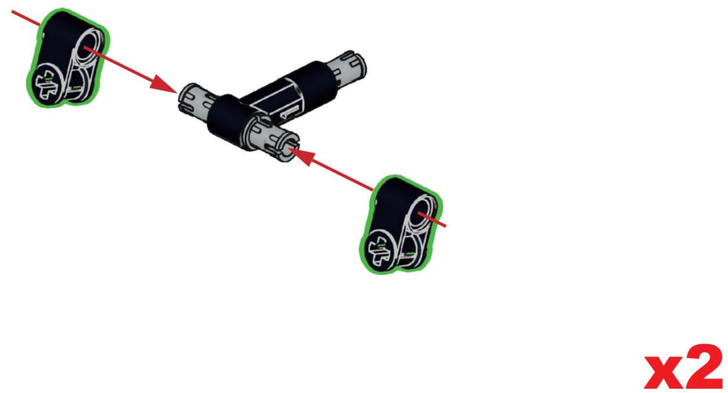

x2

C31

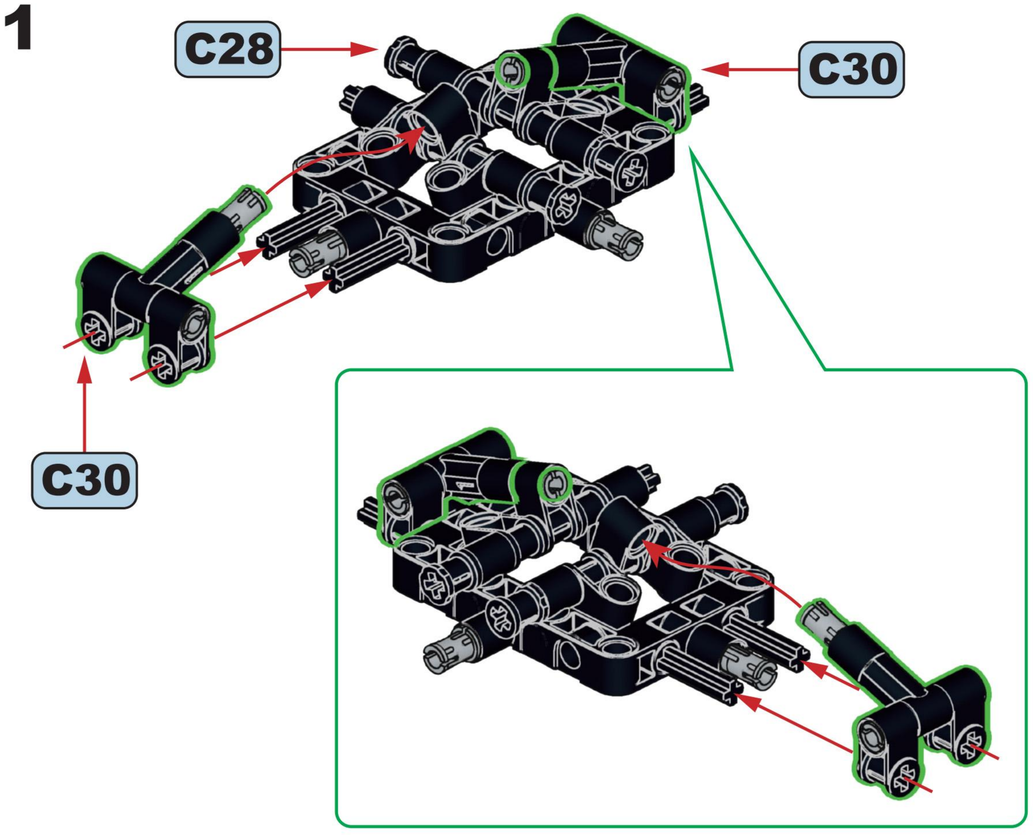

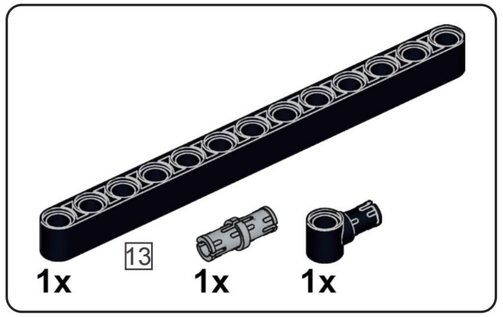

C32

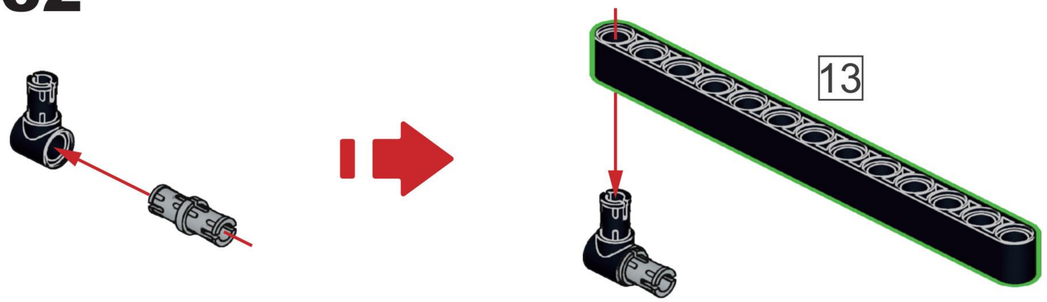

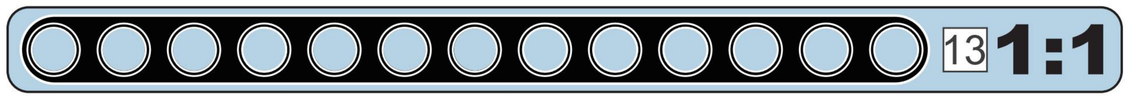

C33

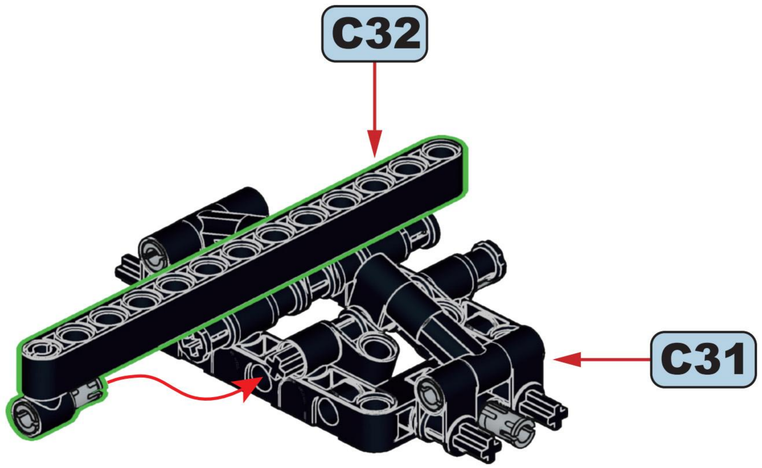

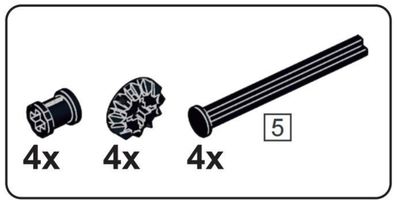

C34





x4

C35

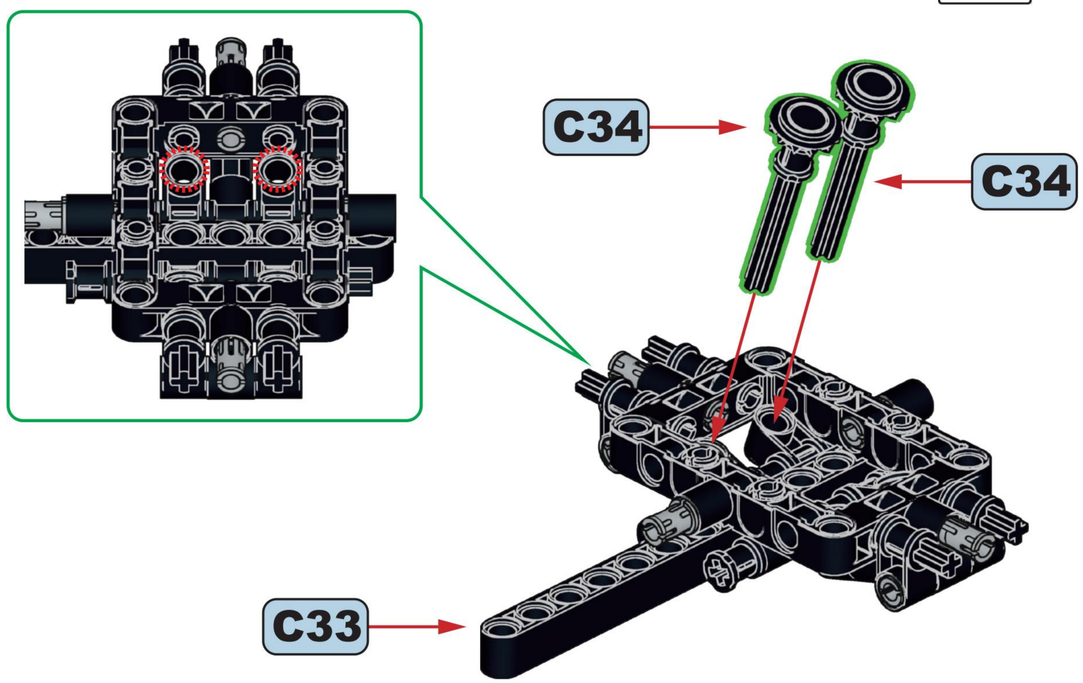

C36

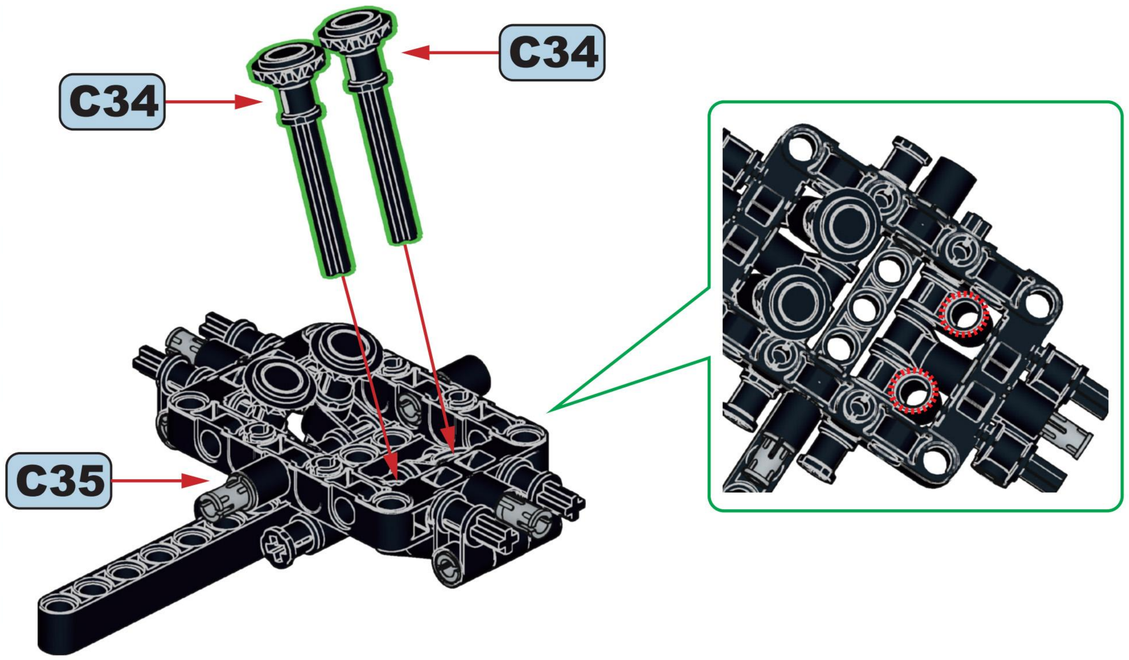

4x 4x

C37

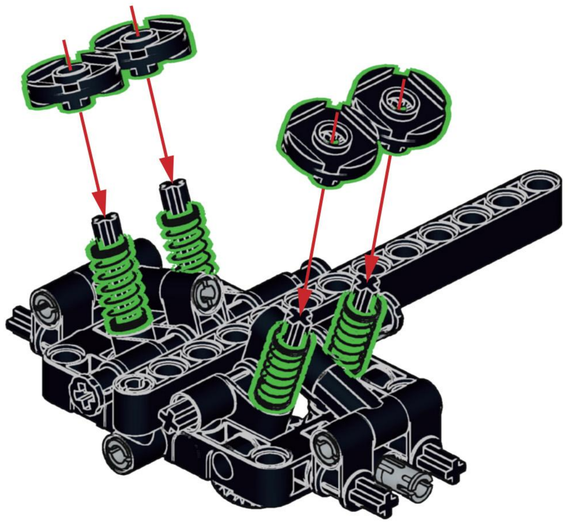

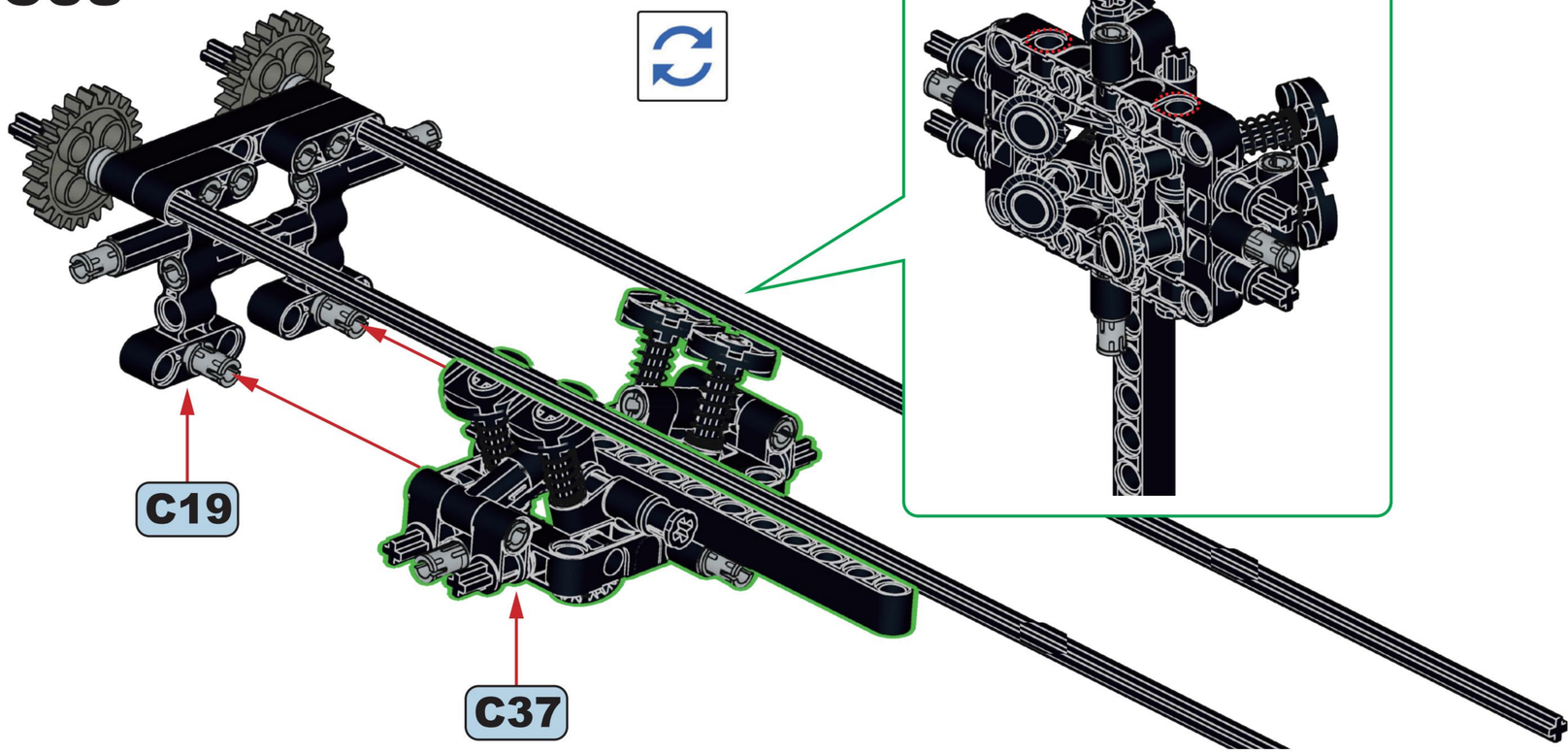

4x 4x

C39

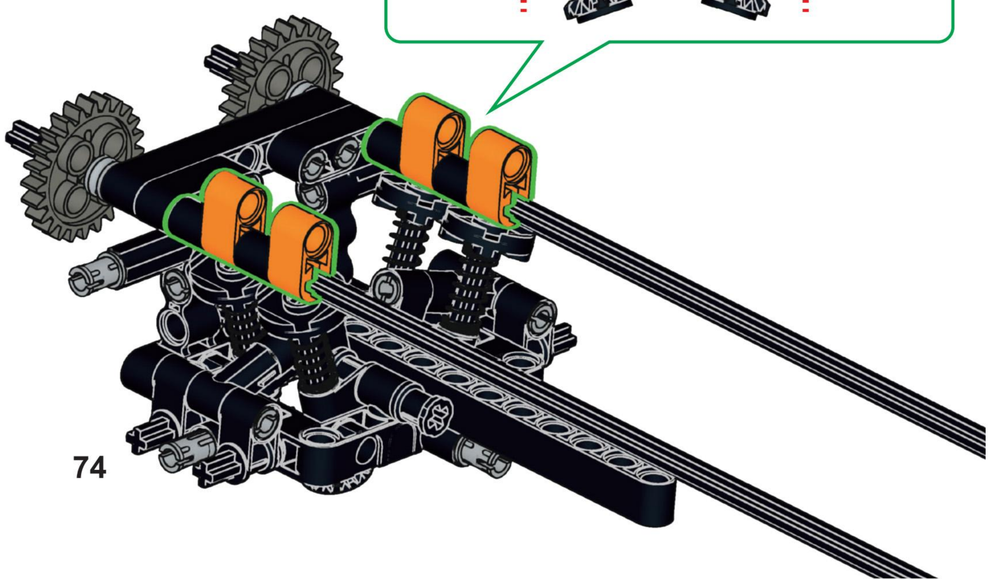

2x 2x 1x 1x

C40

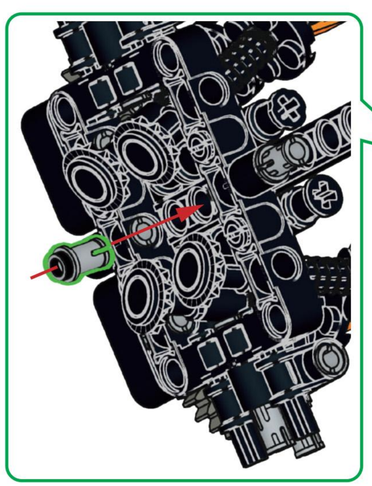

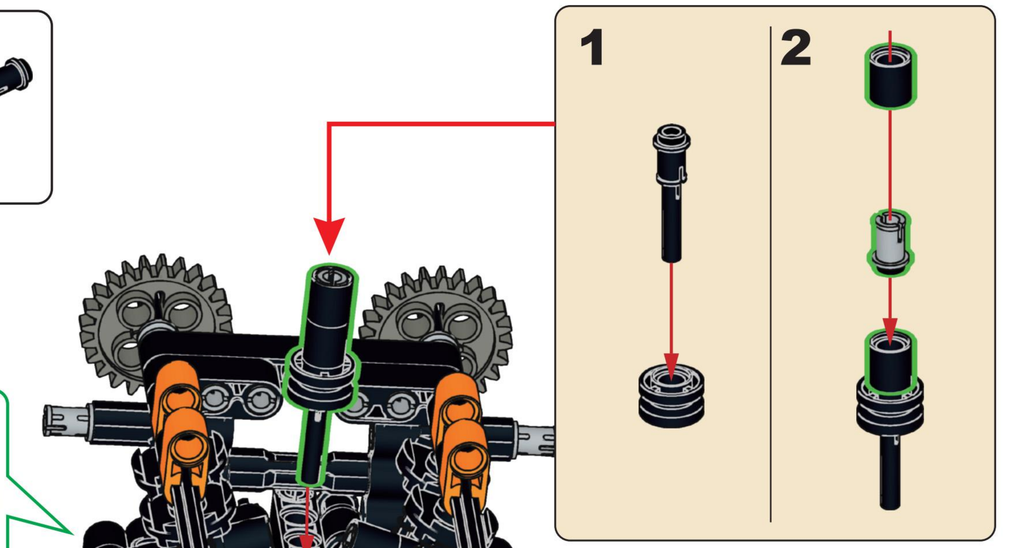

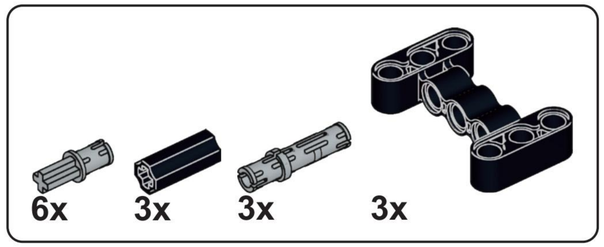

C41

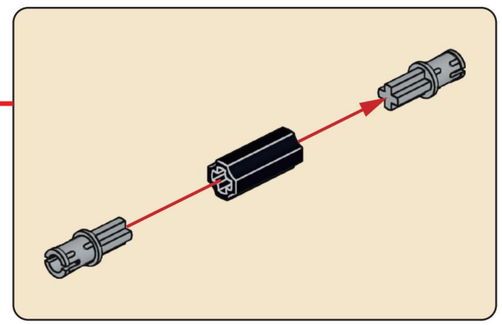

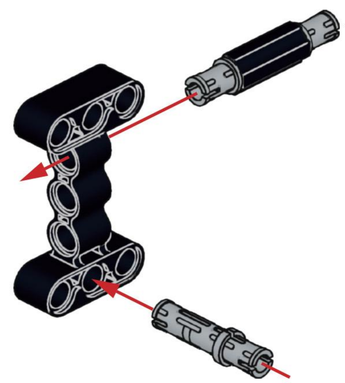

x3

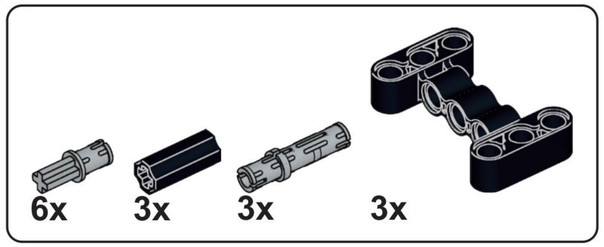

C42

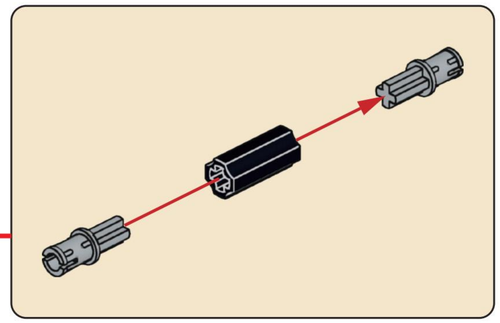

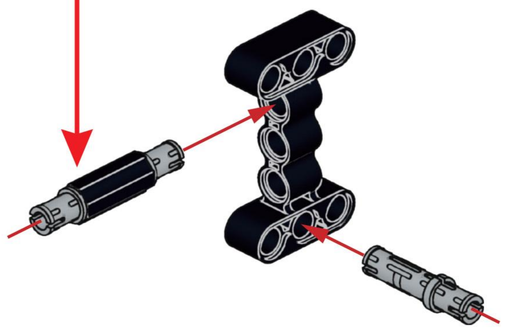

x3

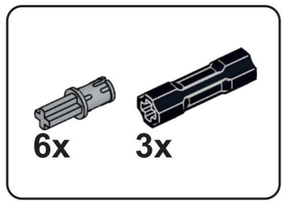

C43

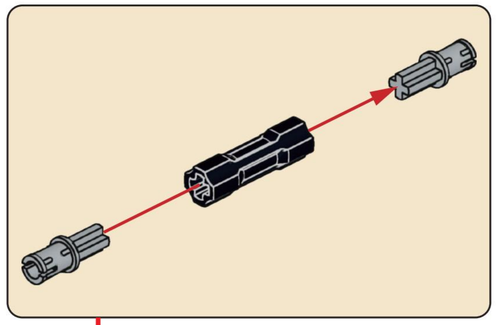

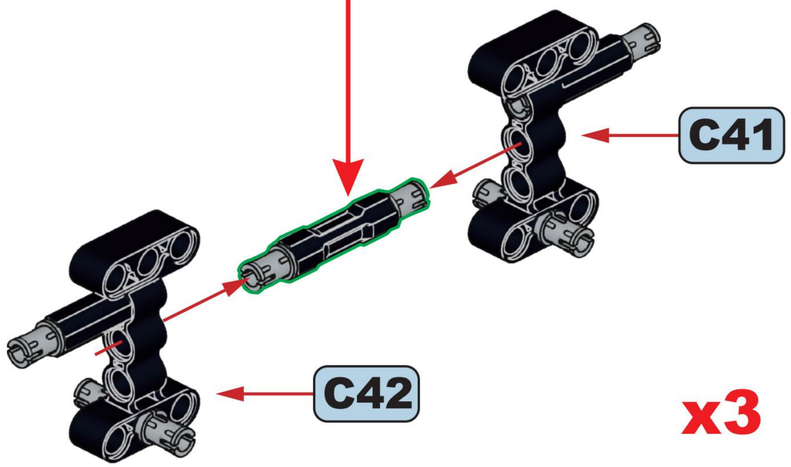

x3



C44

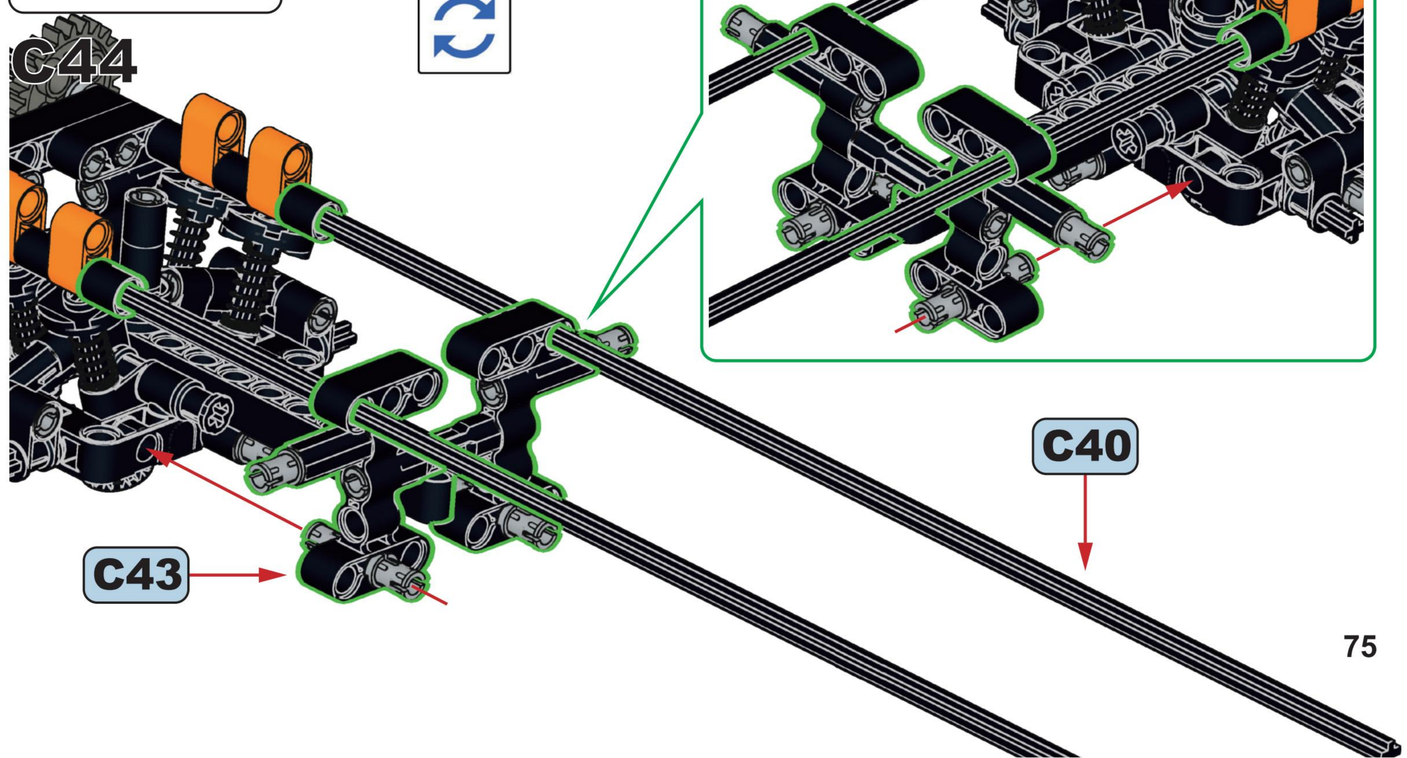

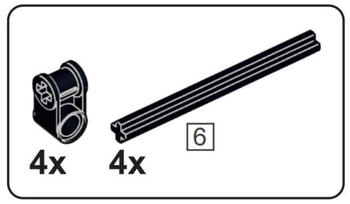

C45

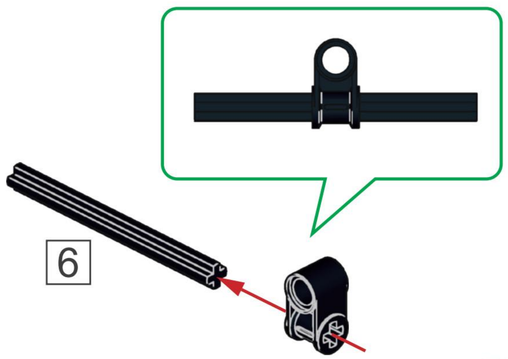

x4



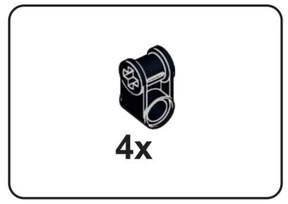

C46

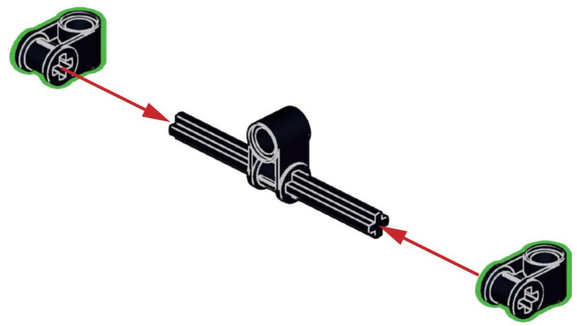

x2

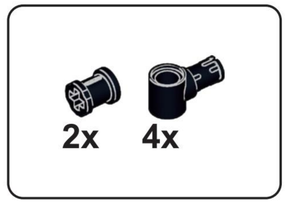

C47

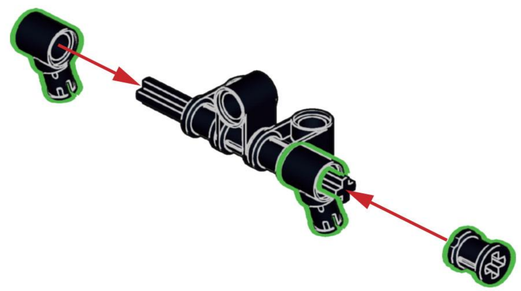

x2

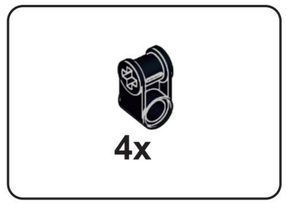

C48

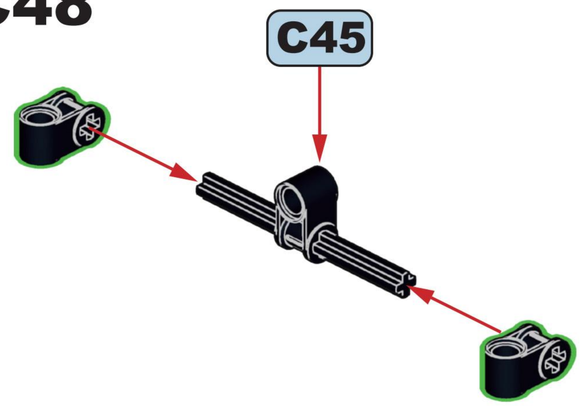

x2

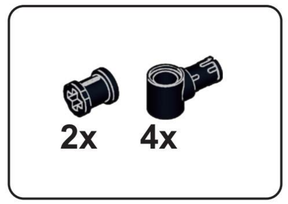

C49

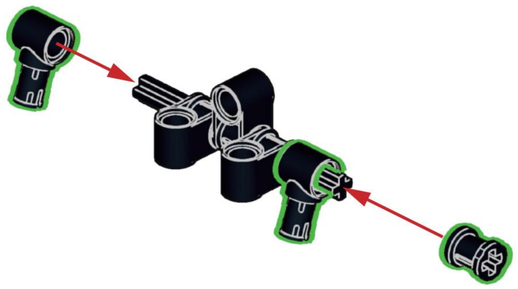

x2

C50

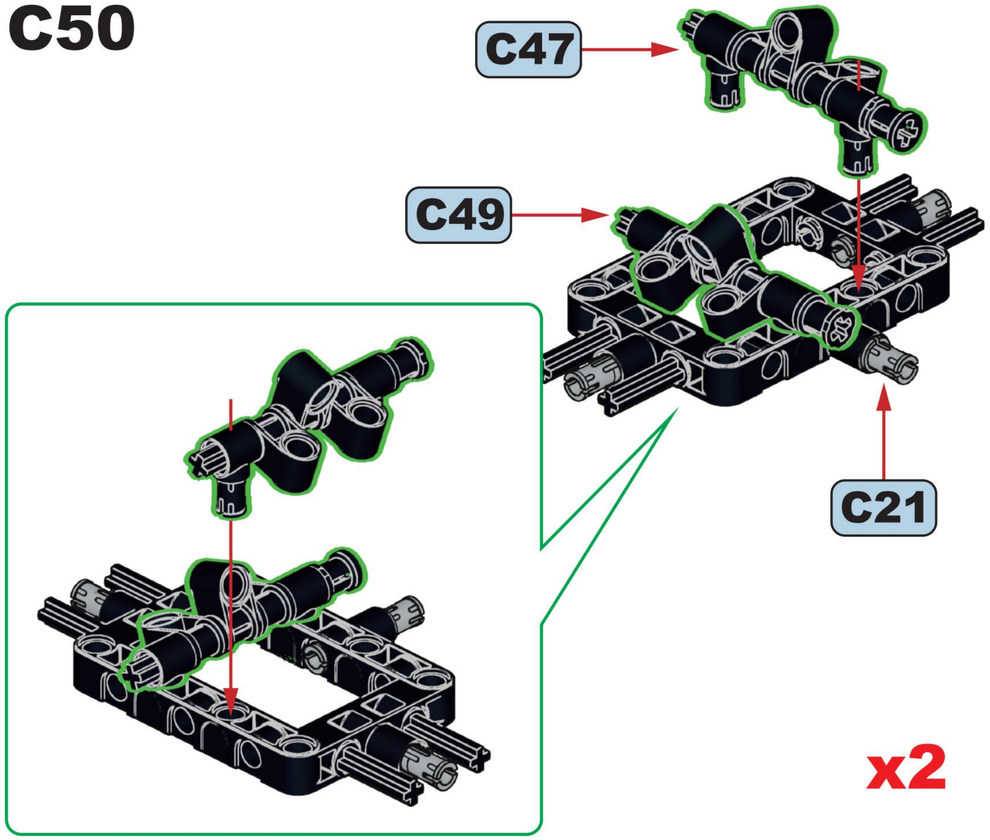

x2

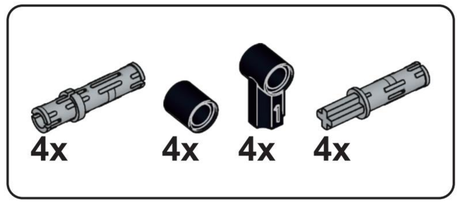

C51

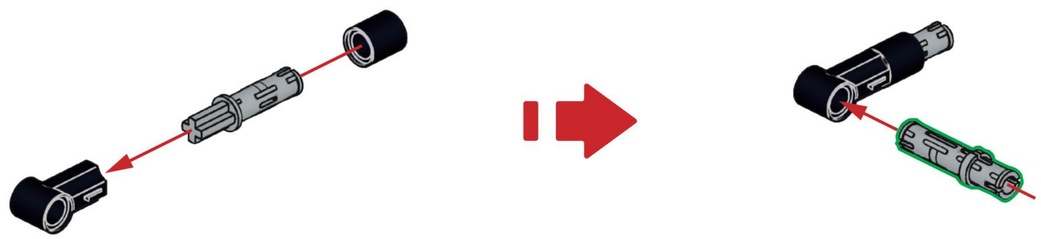

x4

C52

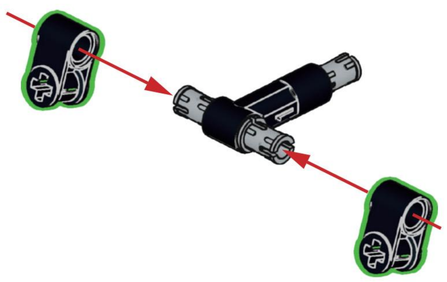

x4

C53

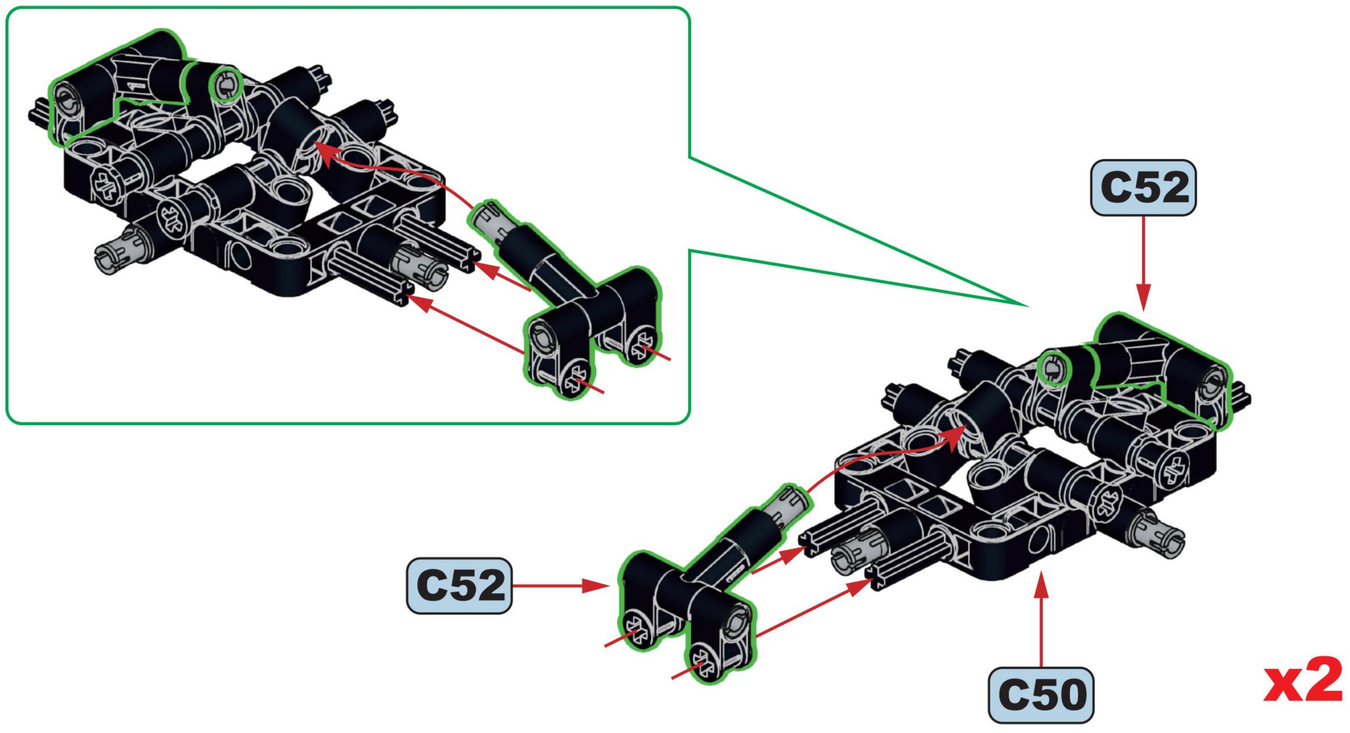

x2

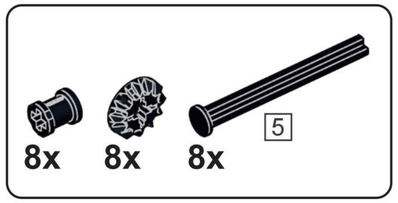

C54





x8

C55

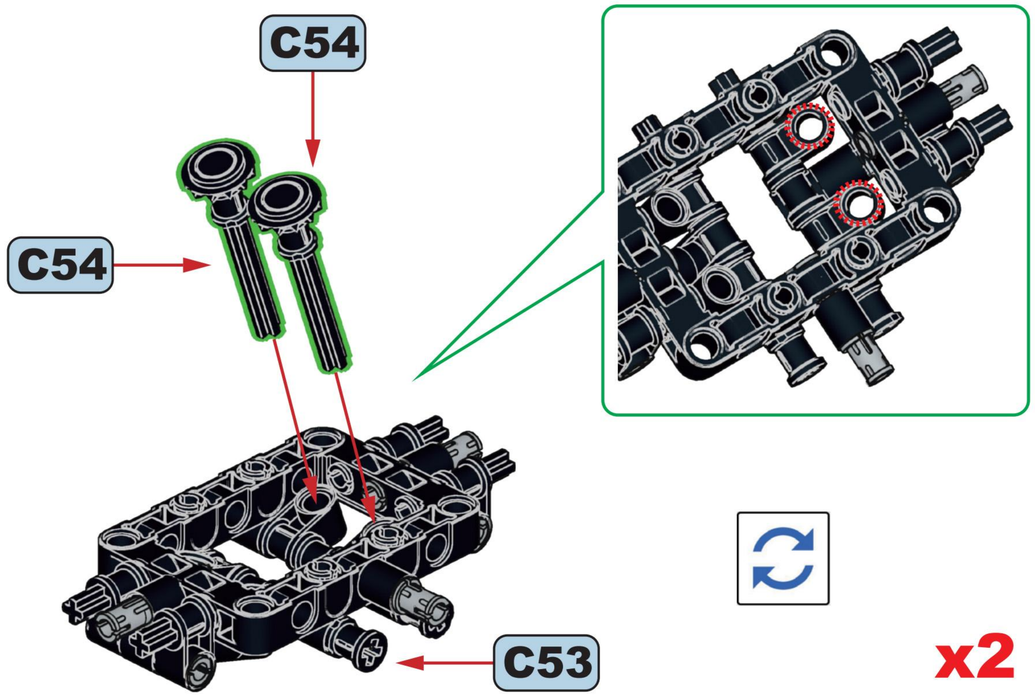

C56

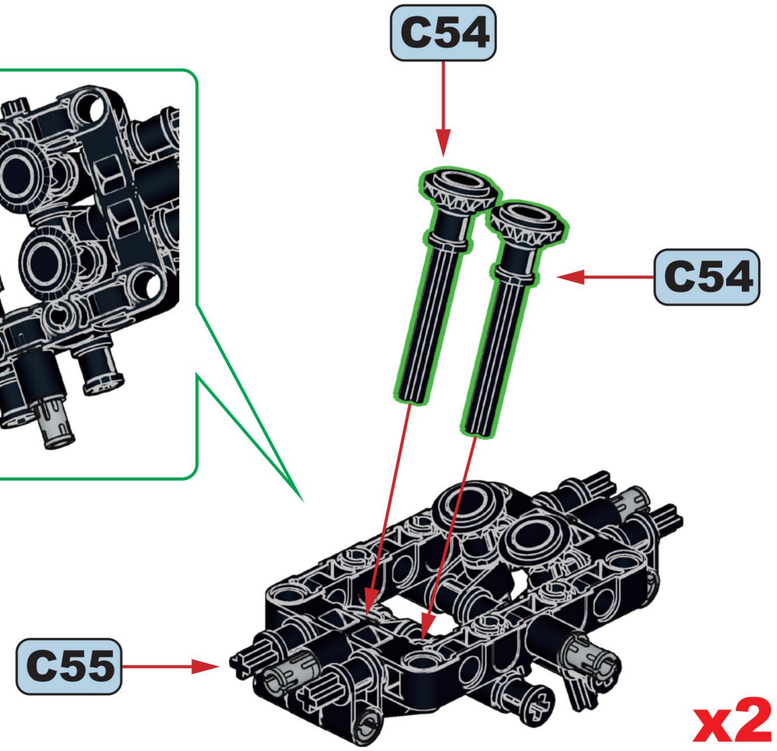

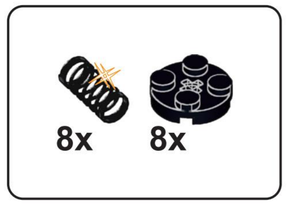

C57

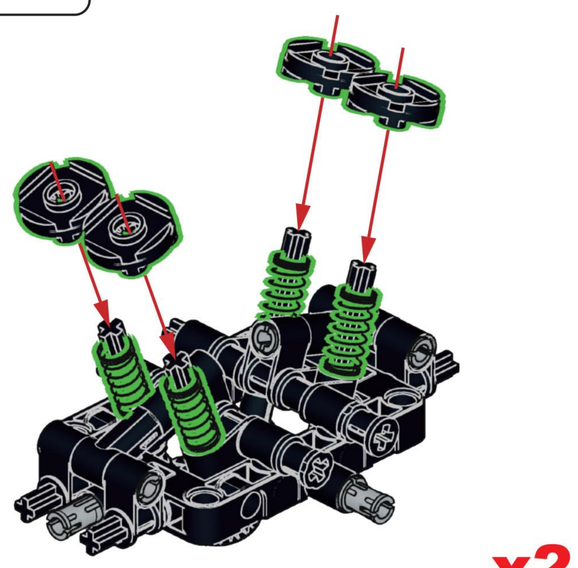

C58

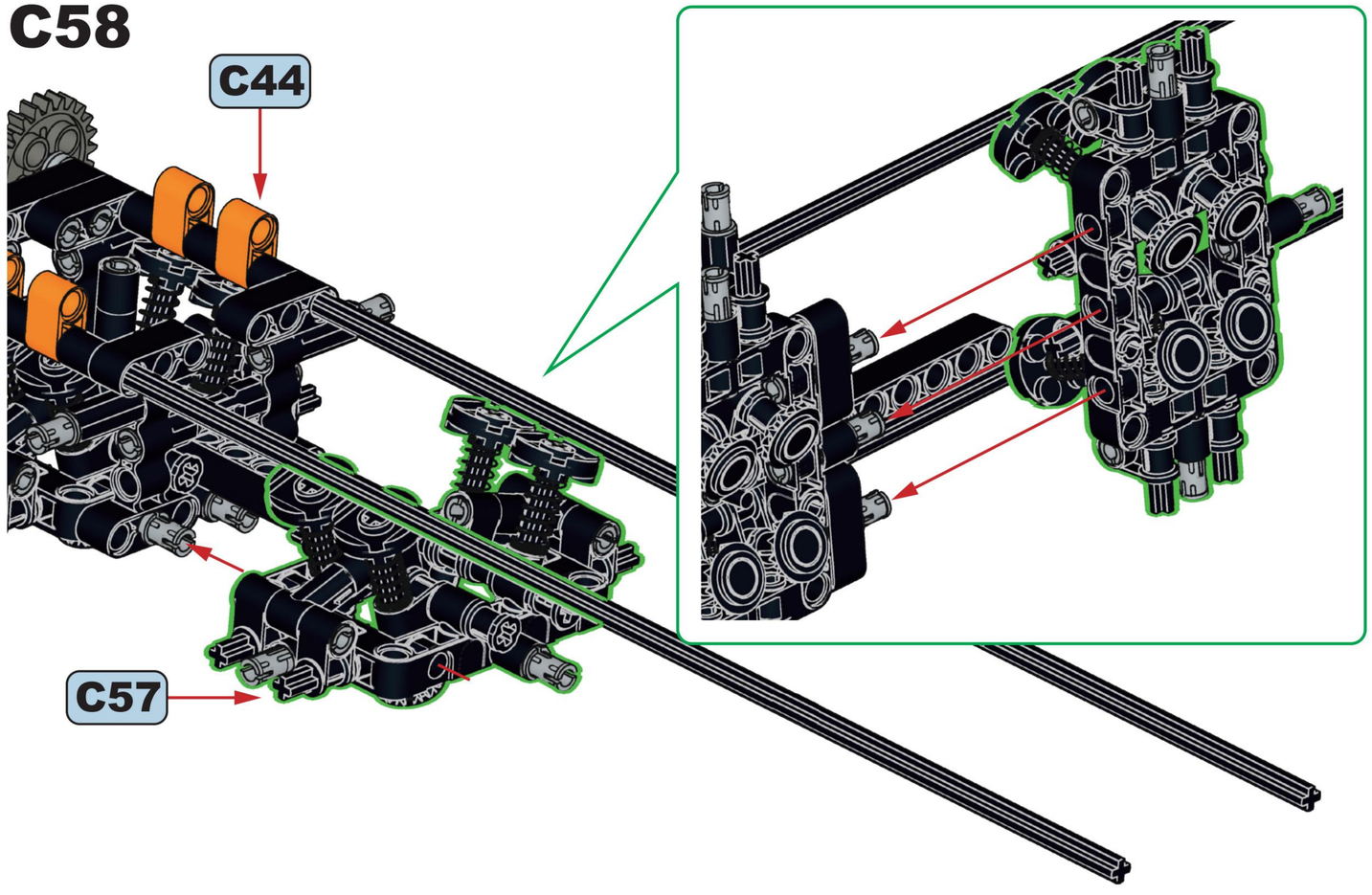

4x 4x

C59

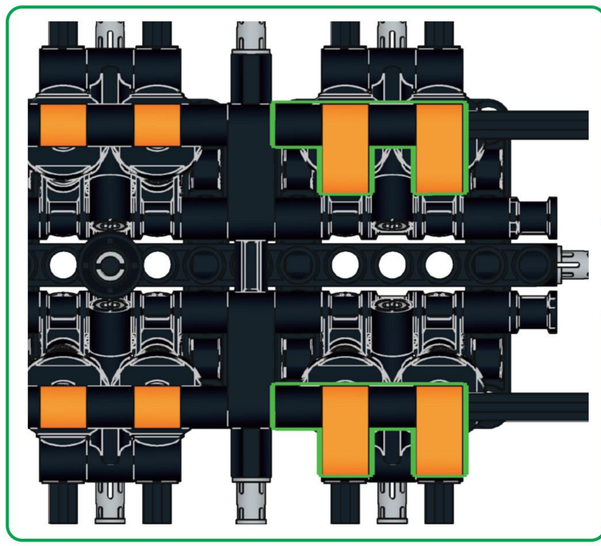

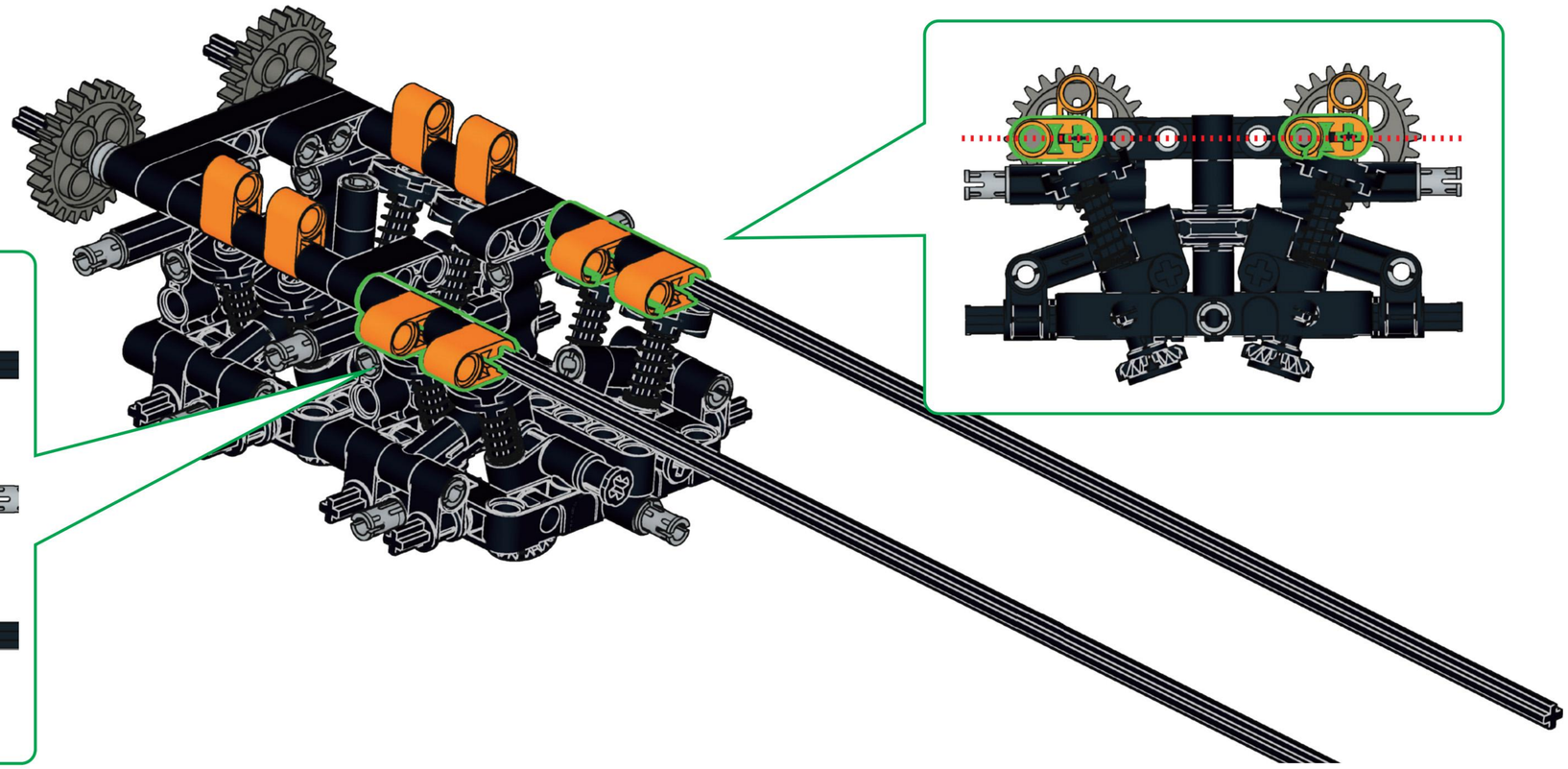

2x 2x 1x 1x

C60

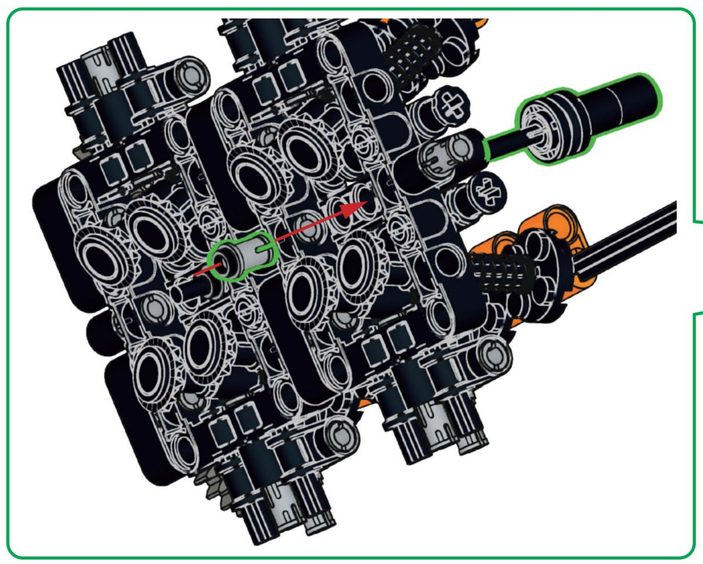

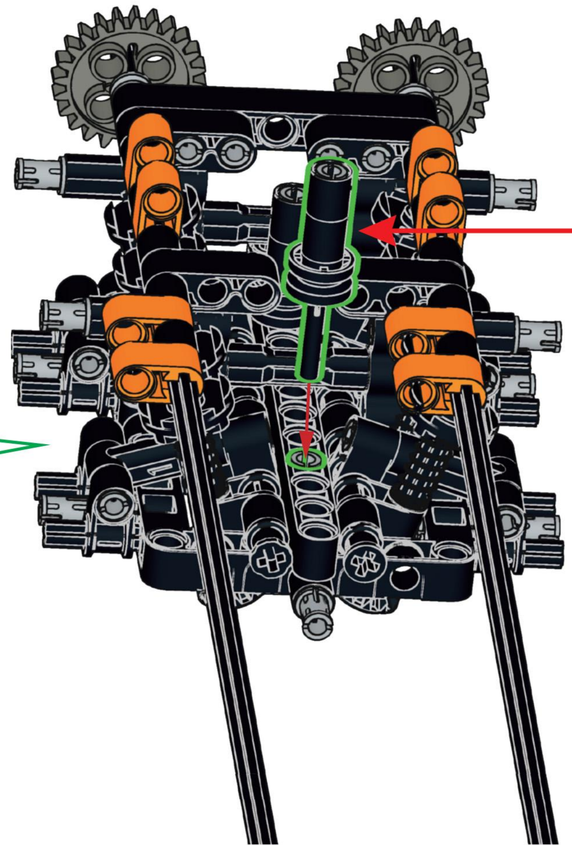

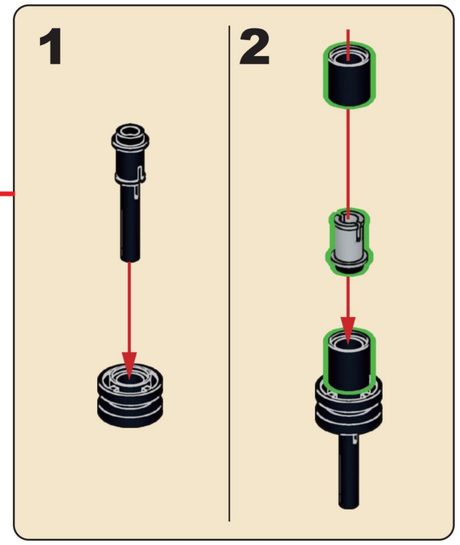

2x

C61

C60

C43

C62

C61

C57

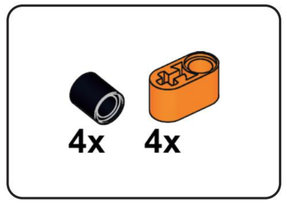

C63

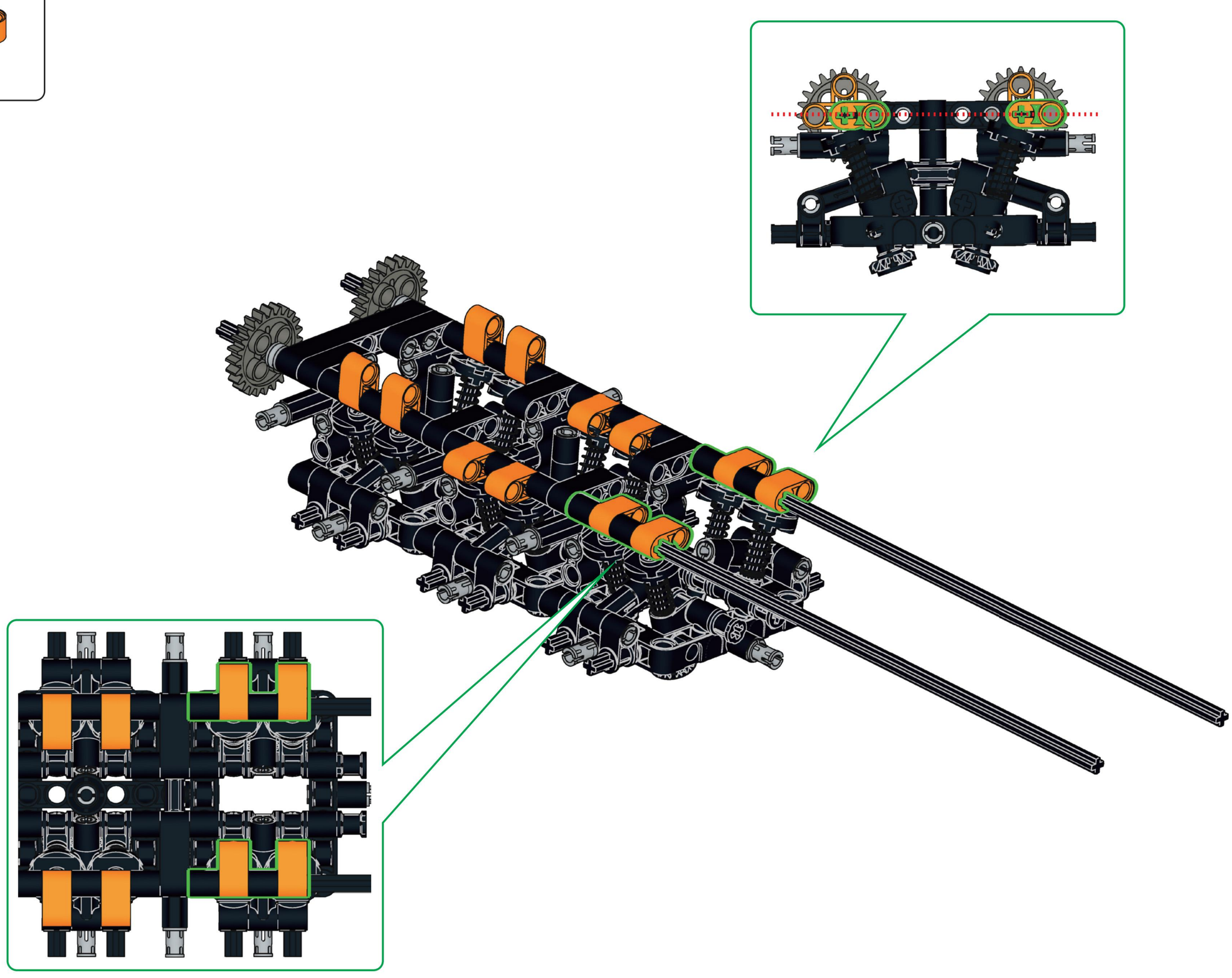

2x

C64

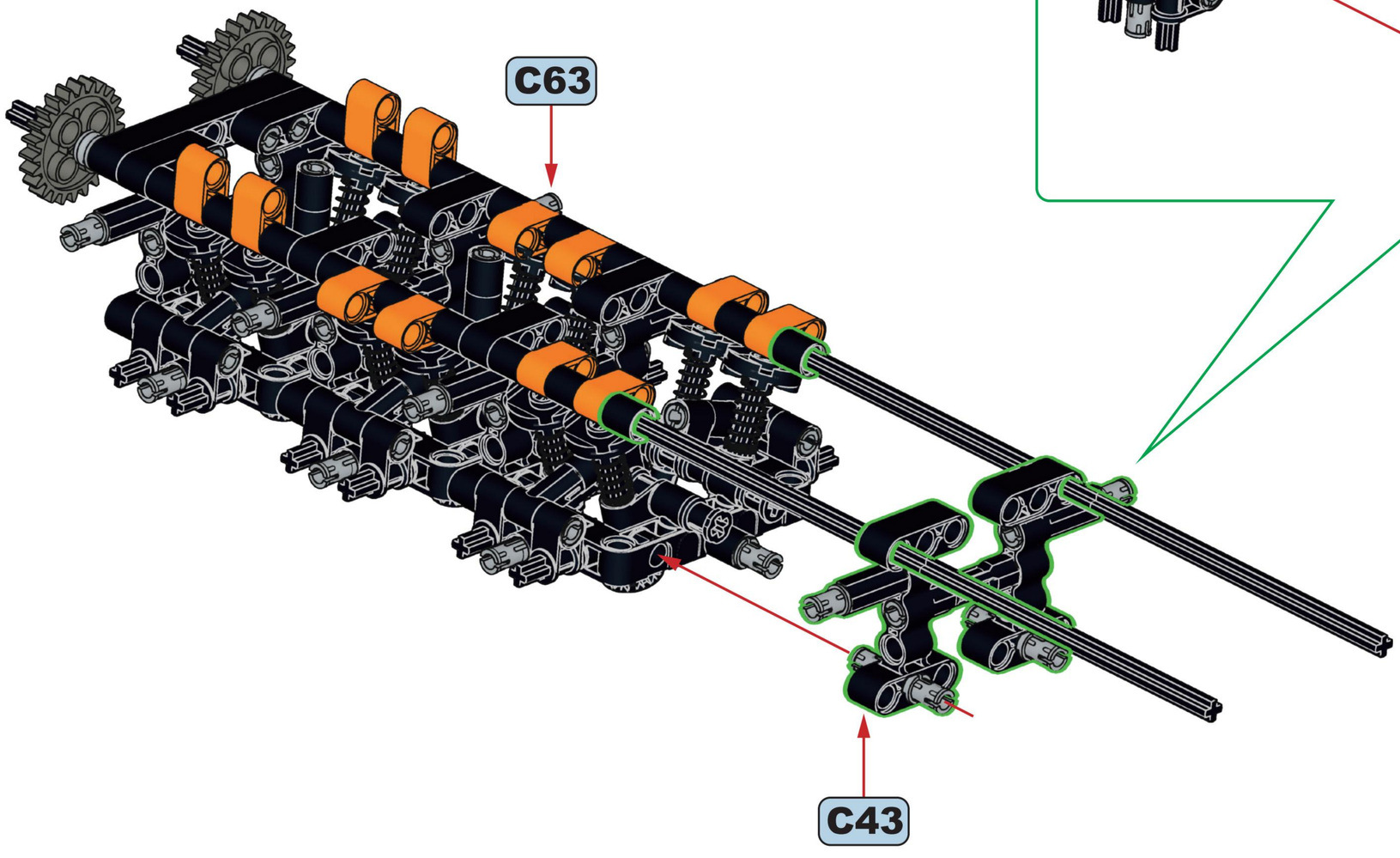

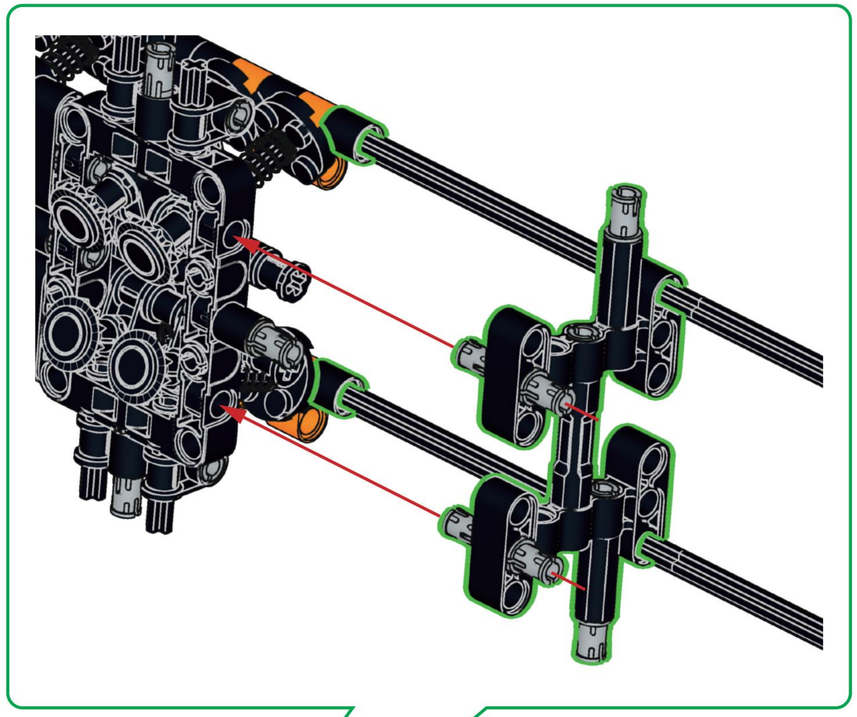

4

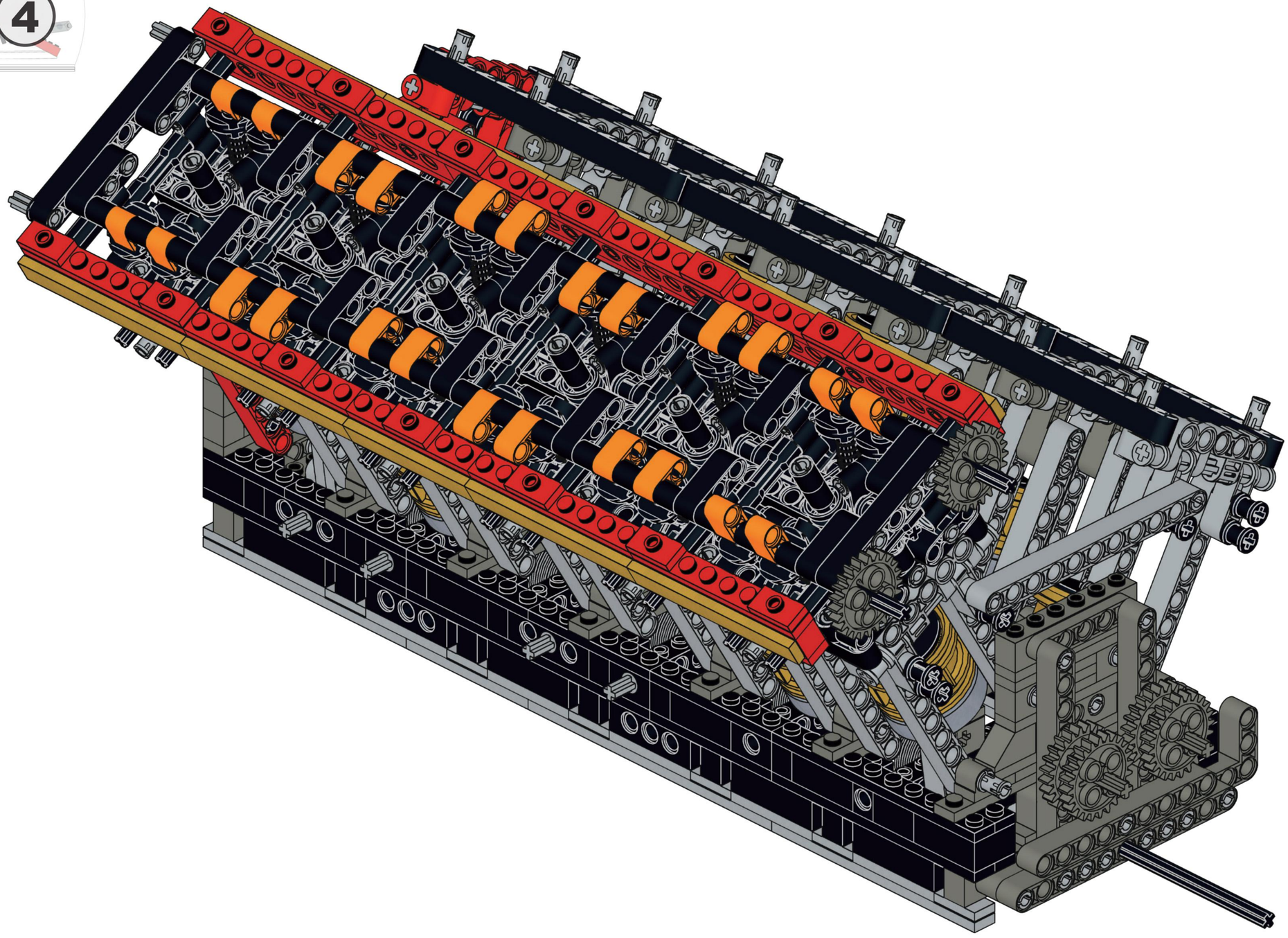

D

2x 8x

D1

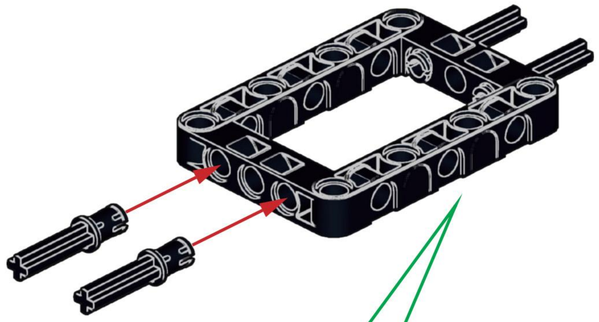

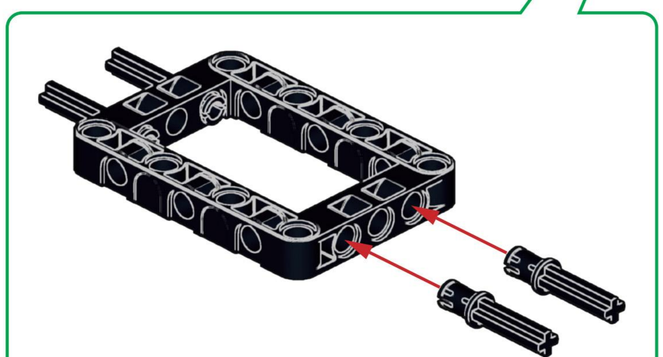

x2

6x 6x

D2

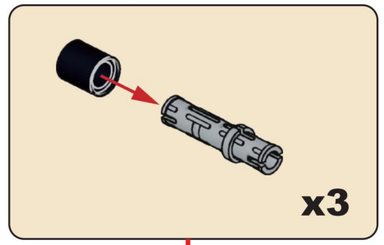

x3

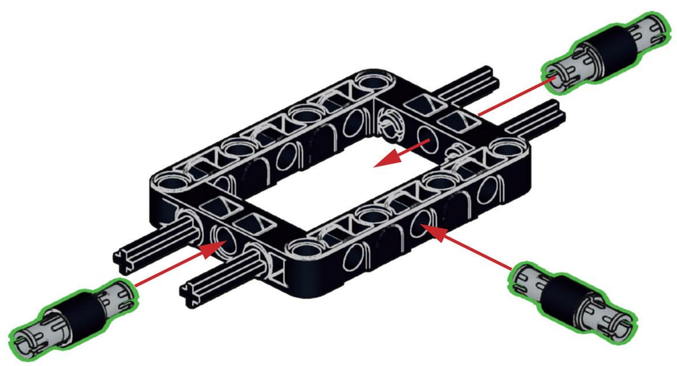

x2

4x 4x 6

D3

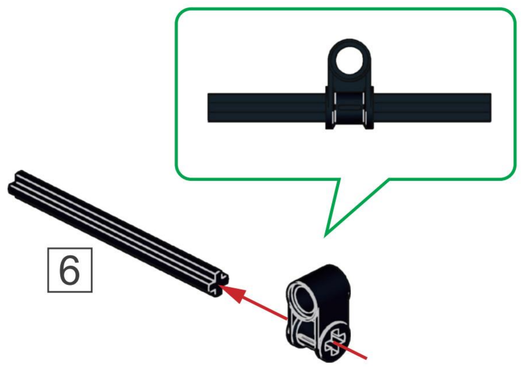

6

x4

6 1:1

4x

D4

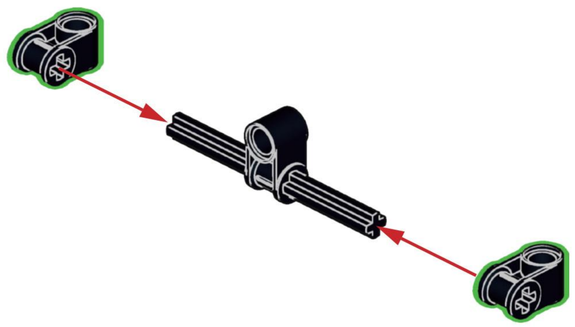

x2

2x 4x

D5

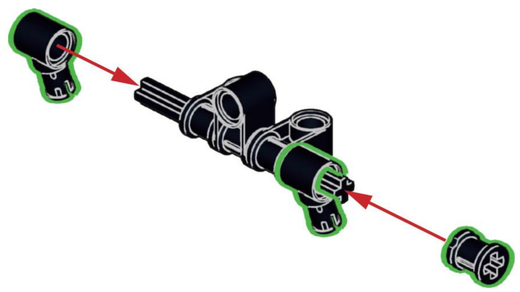

x2

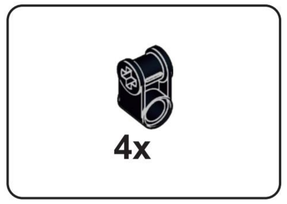

D6

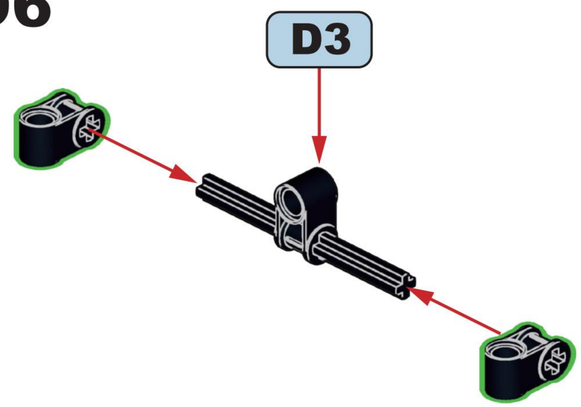

x2

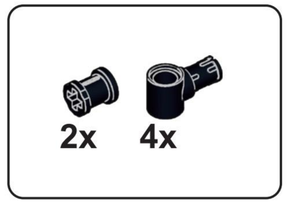

D7

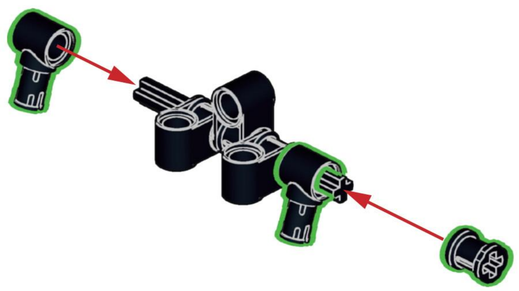

x2

D8

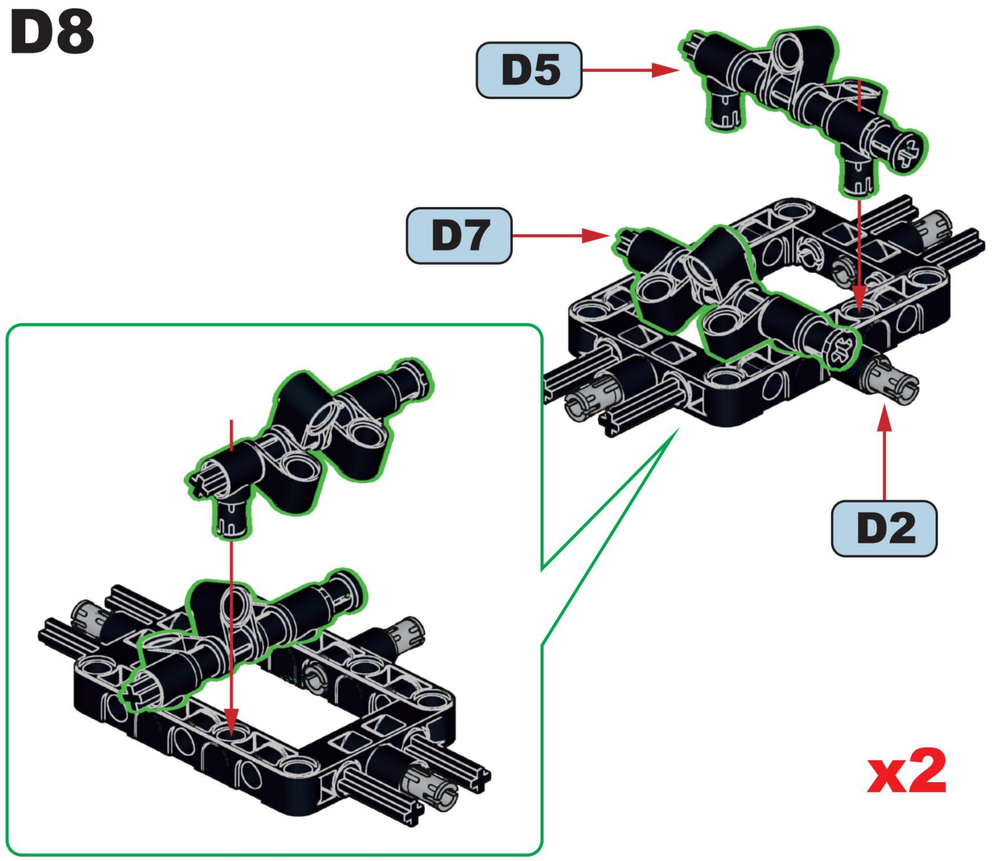

x2

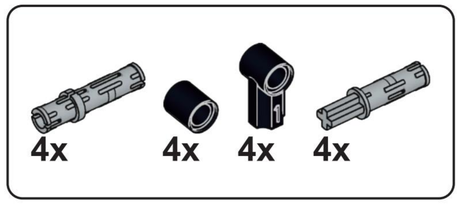

D9

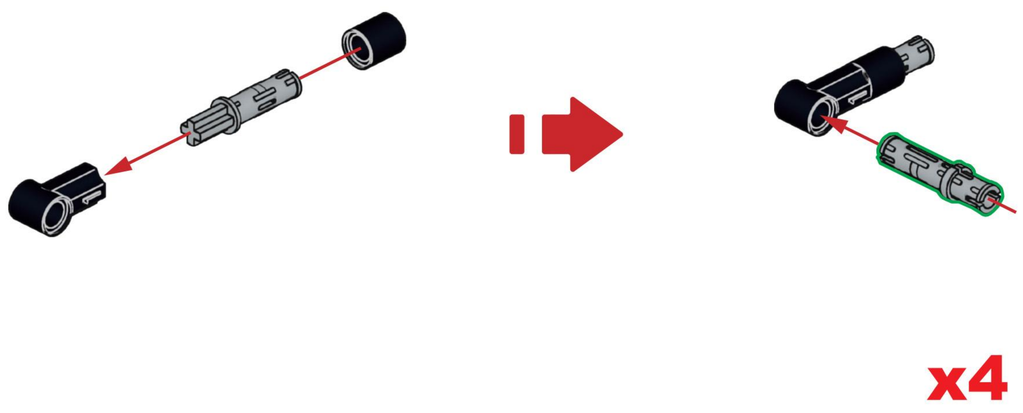

x4

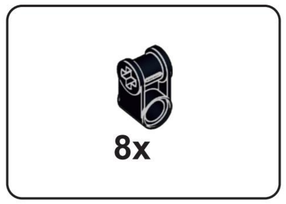

D10

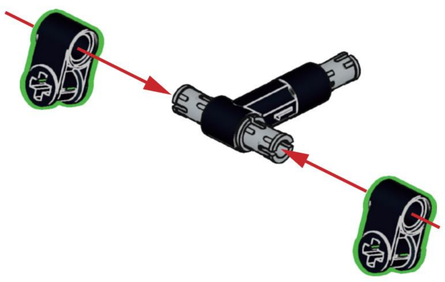

x4

D11

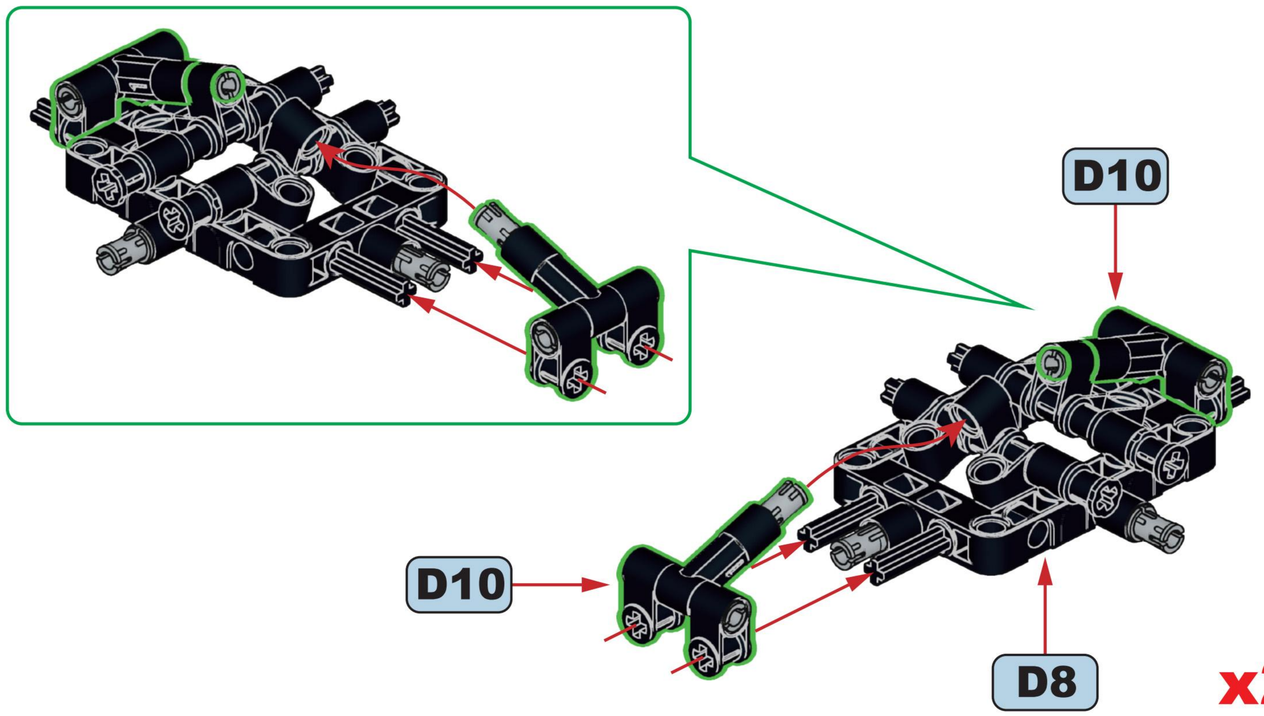

x2

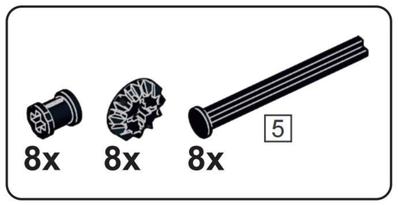

D12





x8

D13

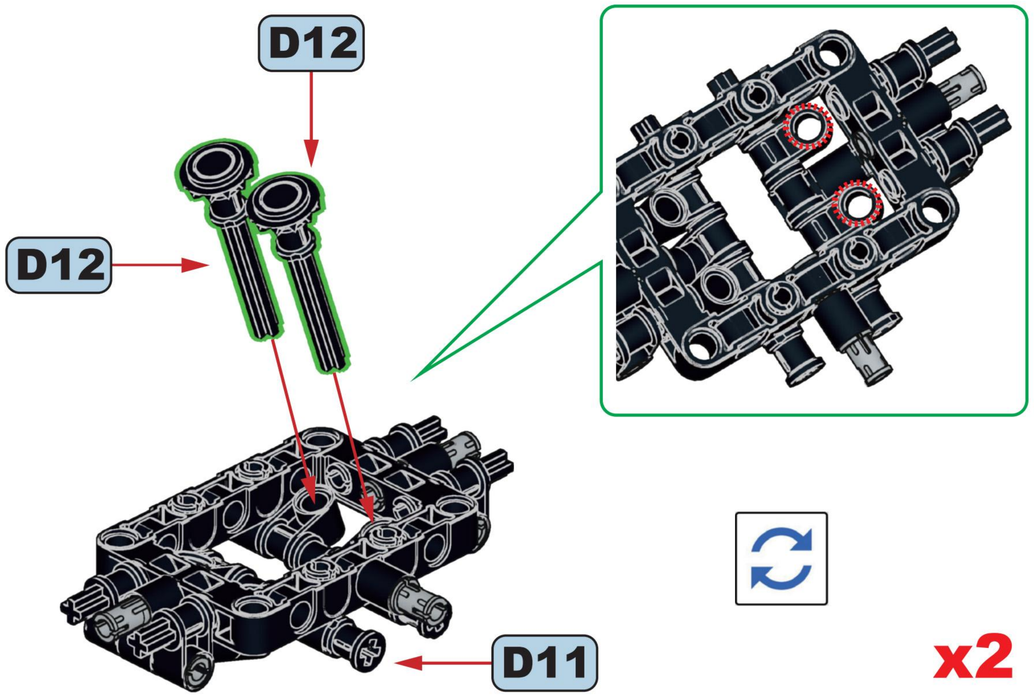

x2

D14

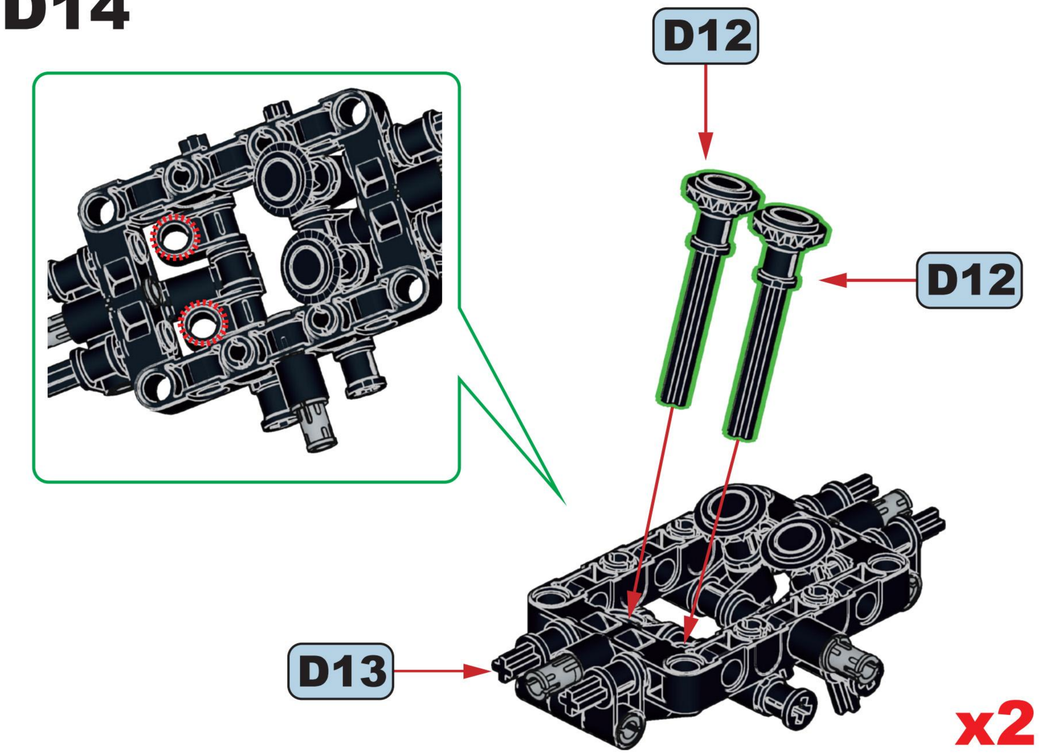

x2

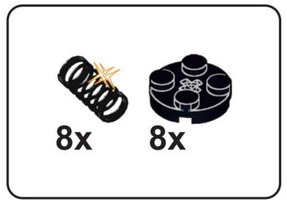

D15

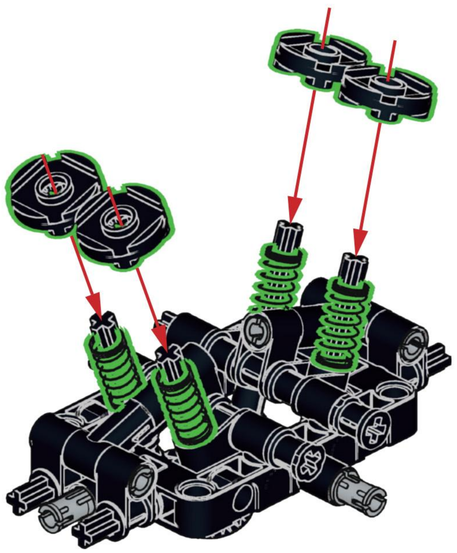

x2

D16

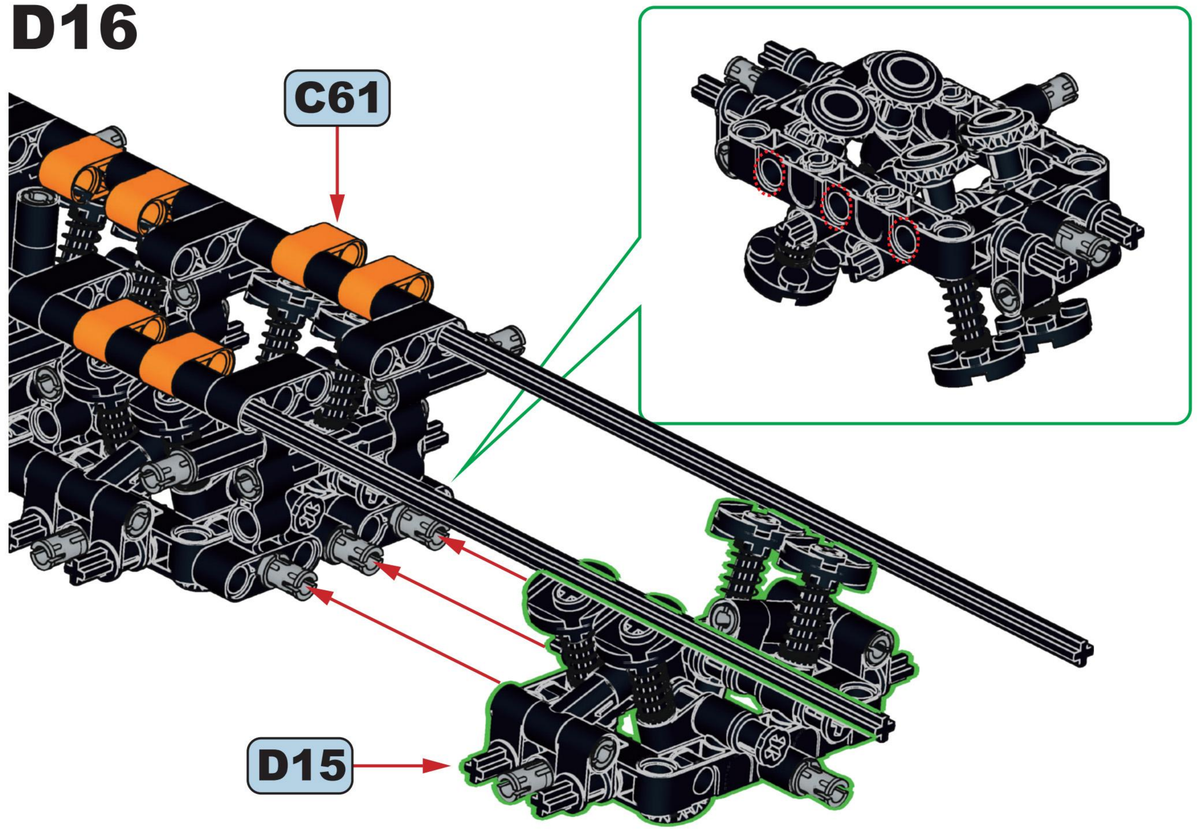

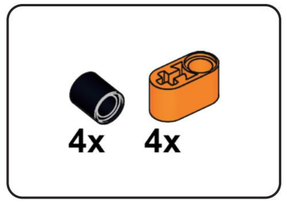

D17

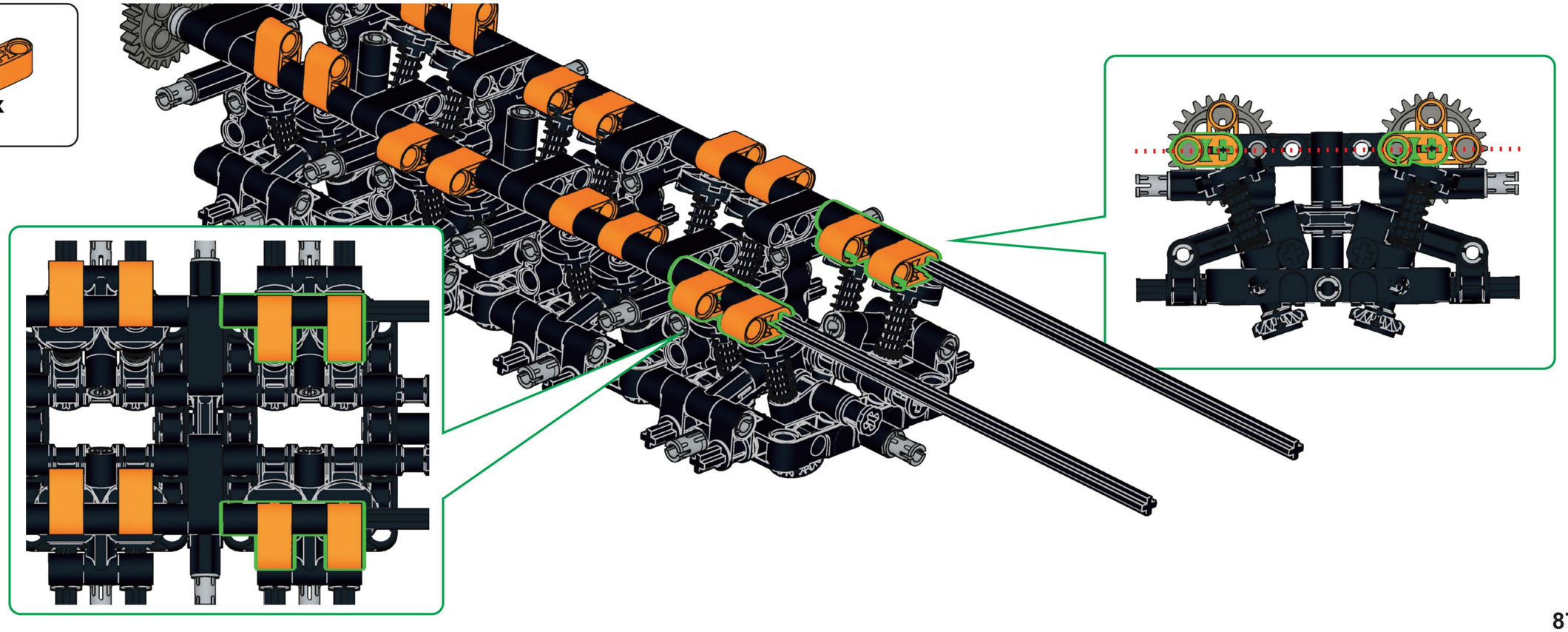

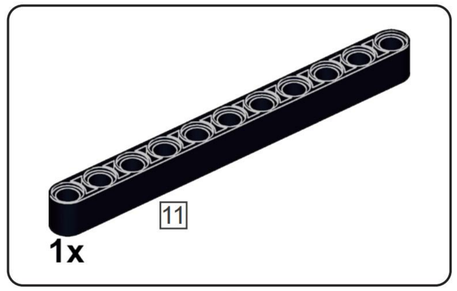



D18

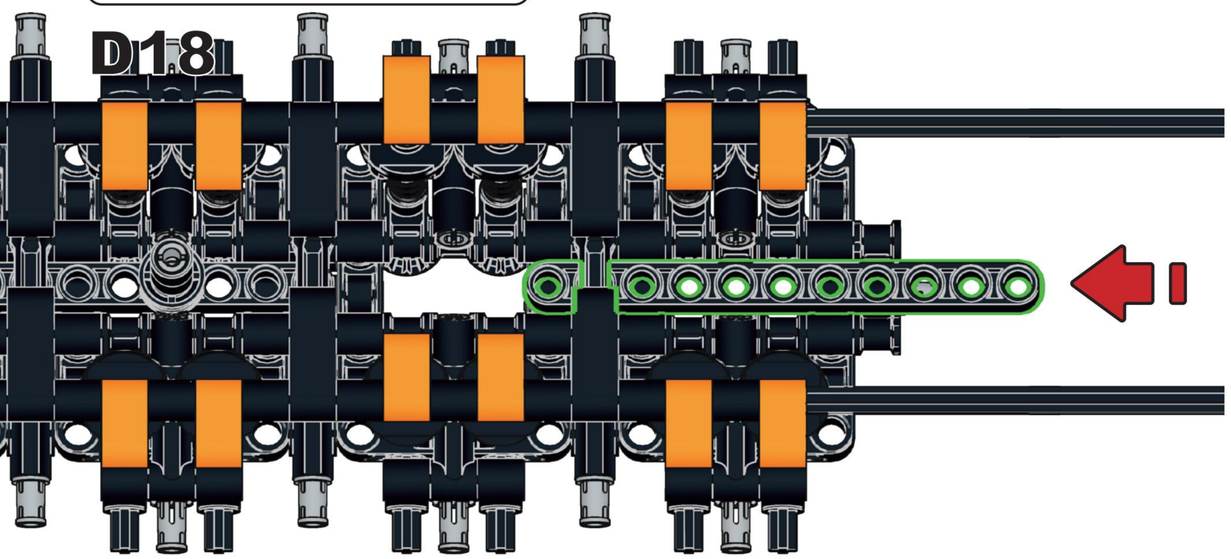

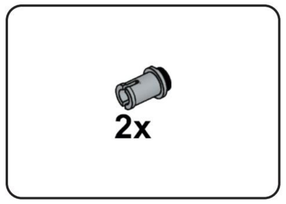



D19

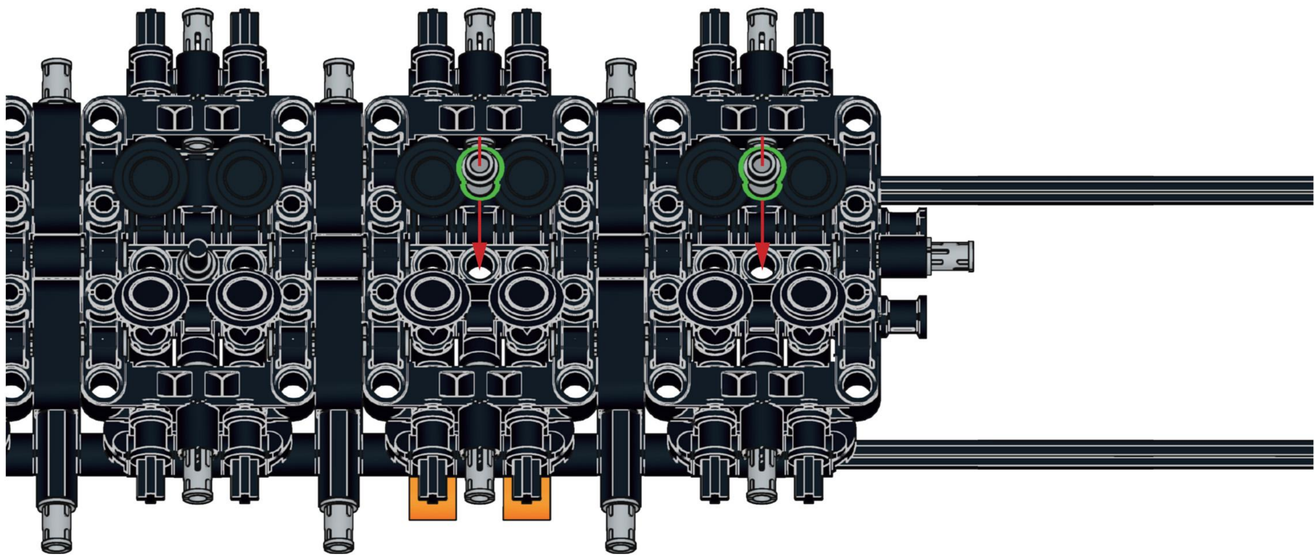

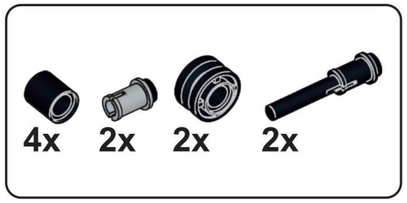

D20



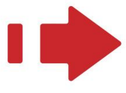



x2

D21

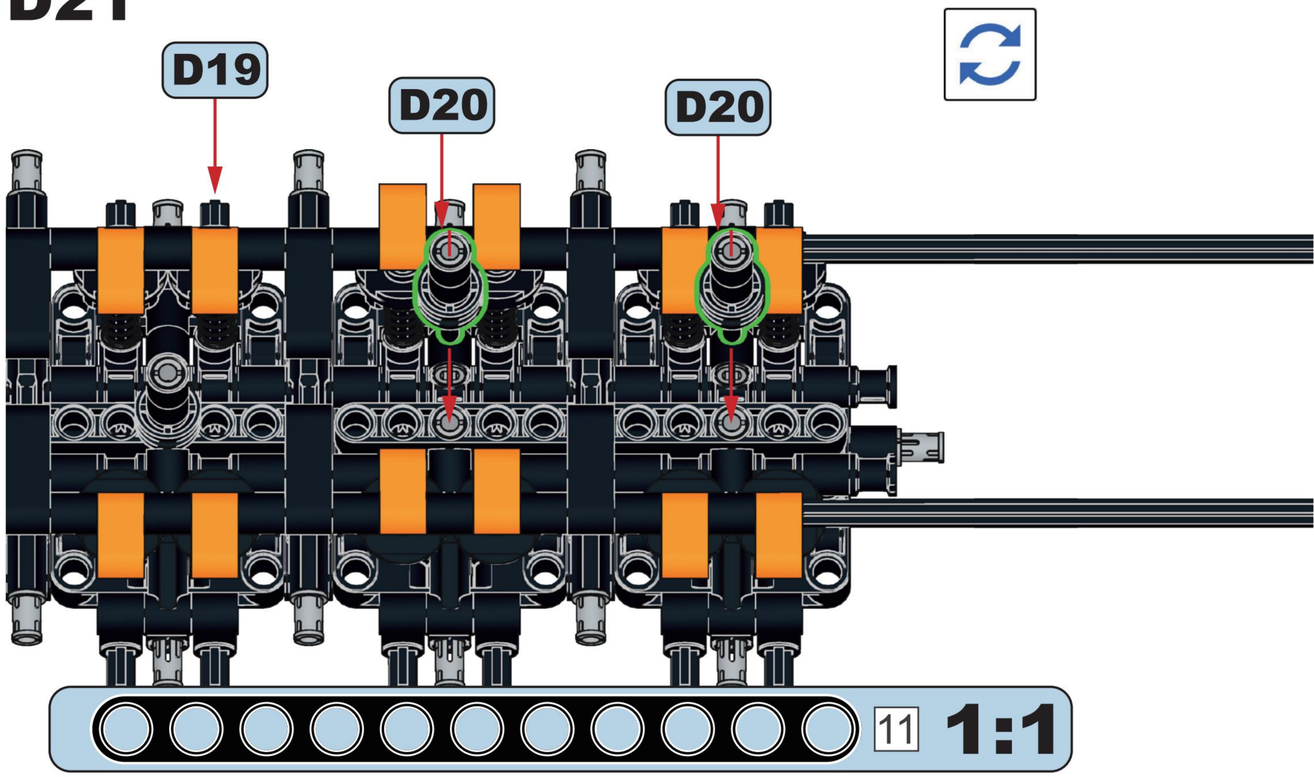

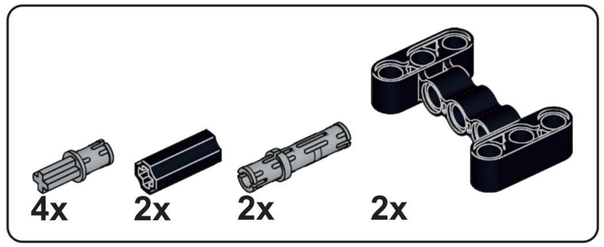

D22

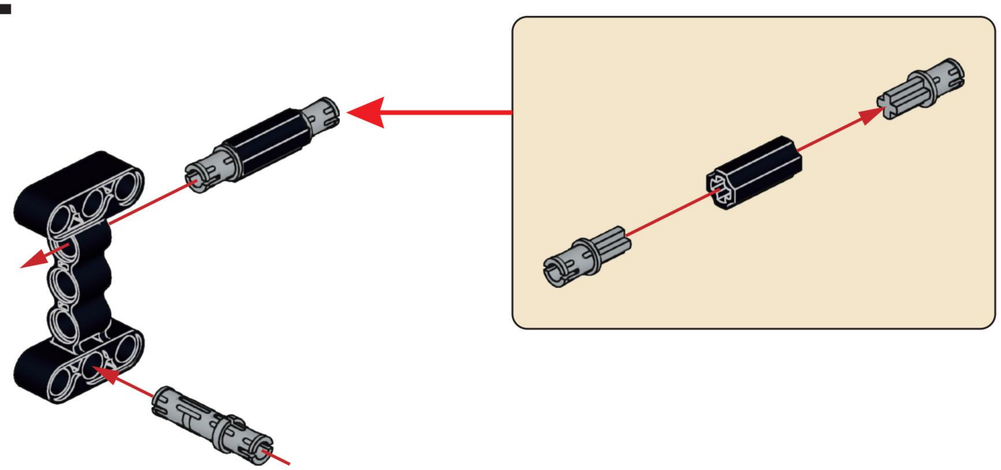

x2

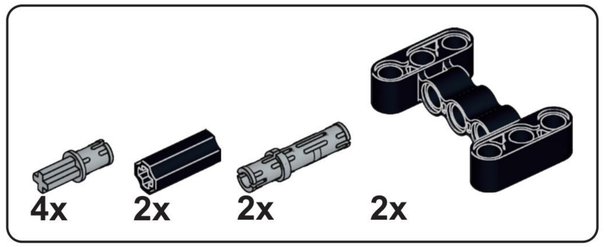

D23

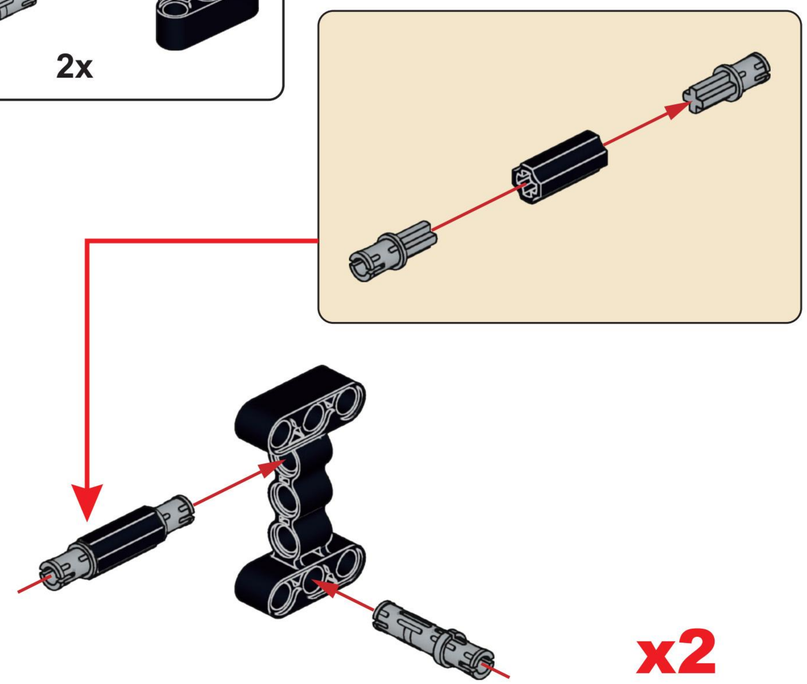

x2

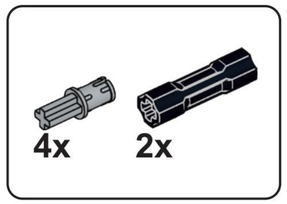

D24

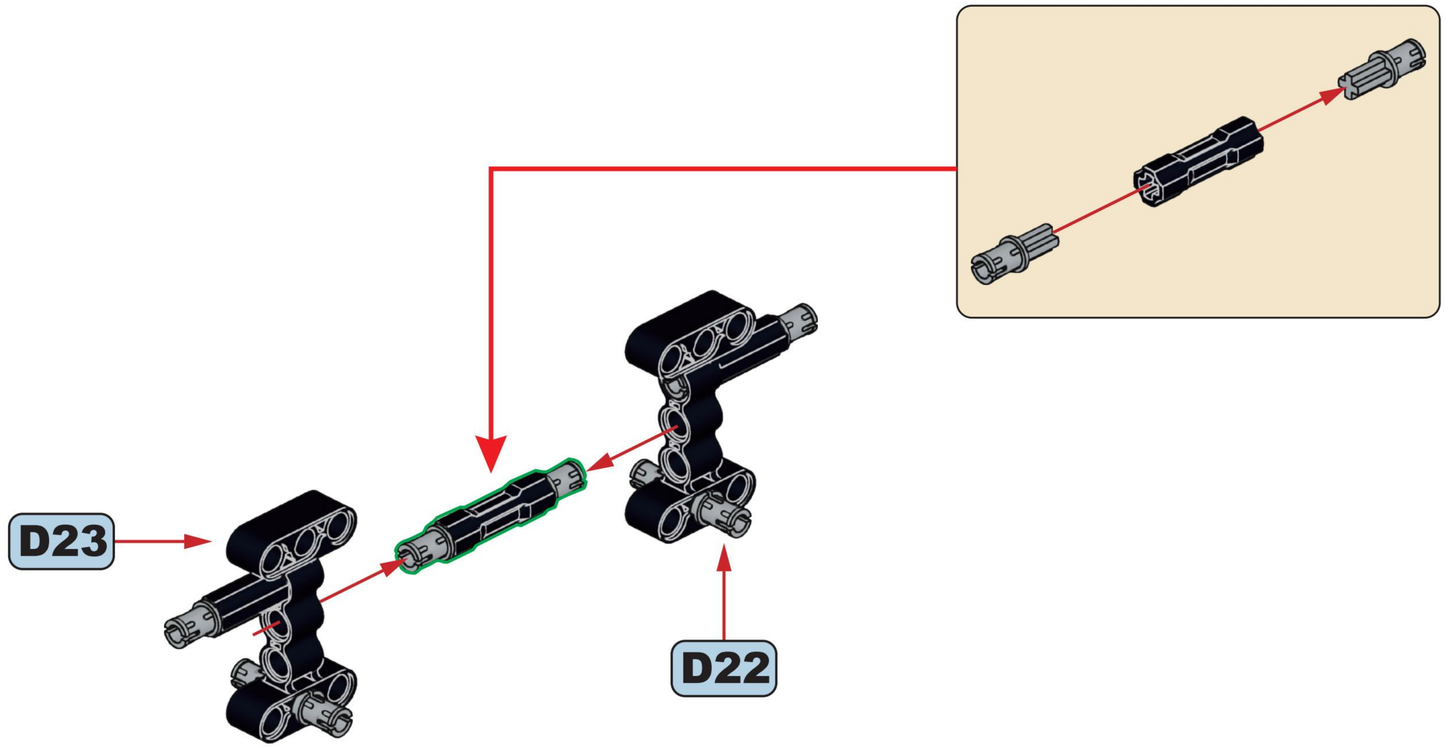

x2

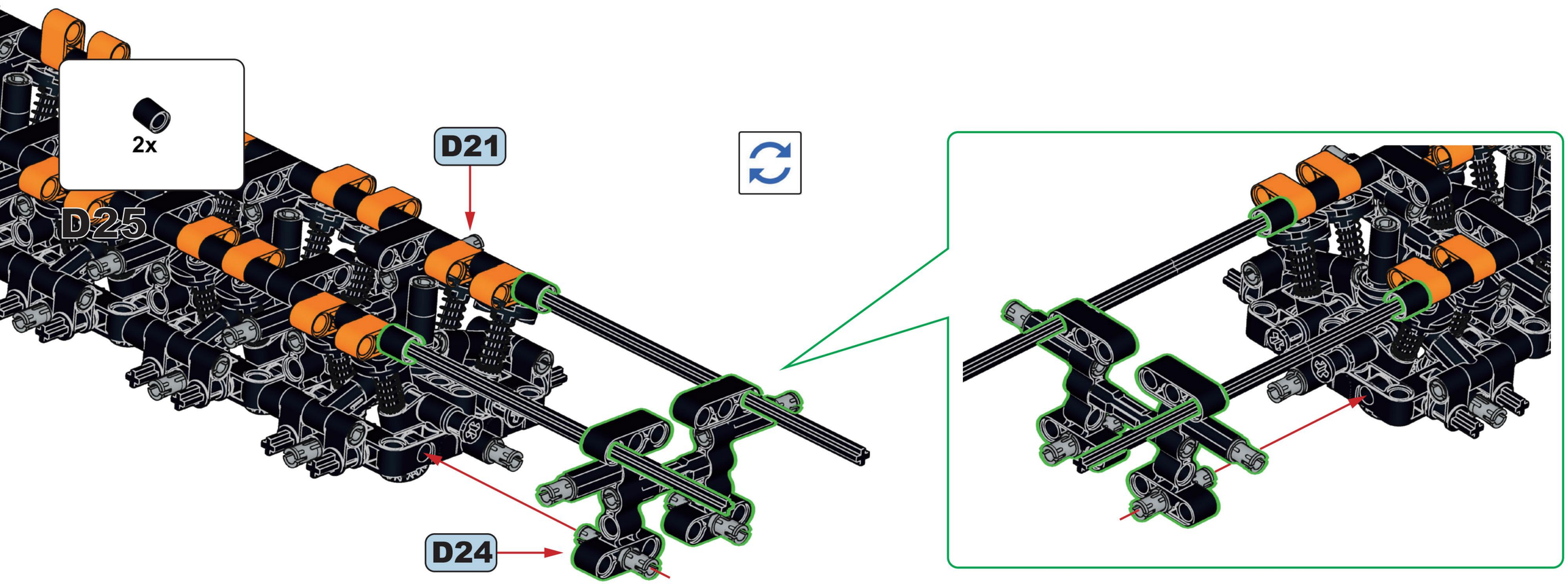
2x
D25
D21
D24

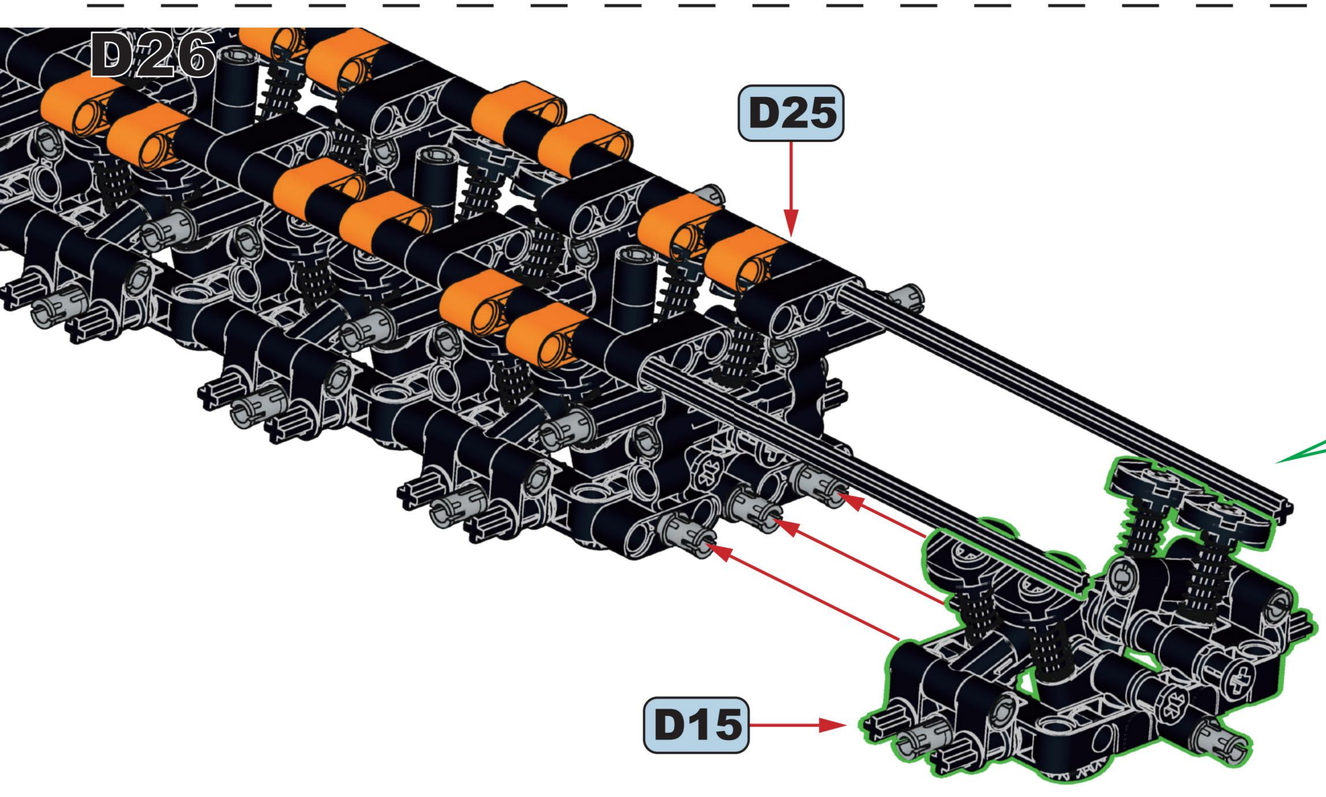
D26
D25
D15

4x 4x

D27

2x

D28

D27

D24

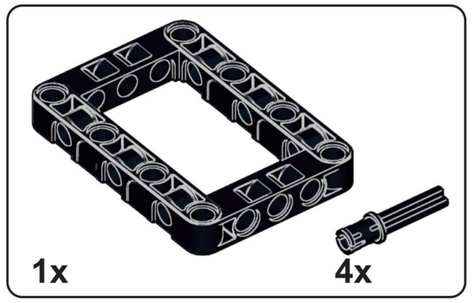

D29

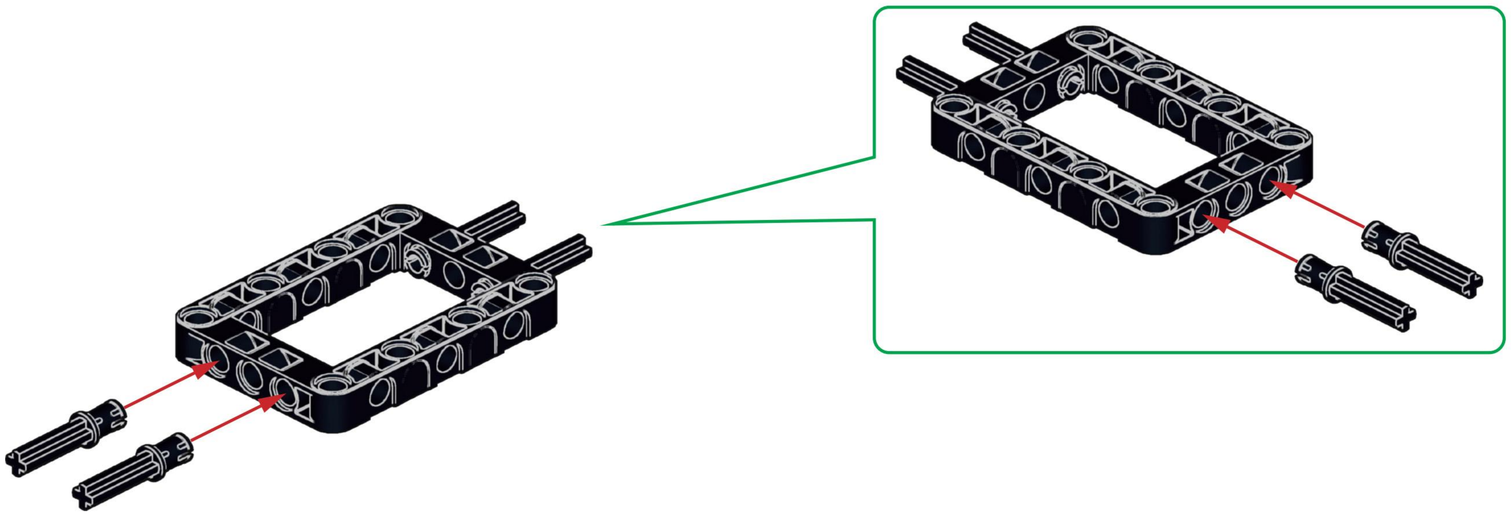



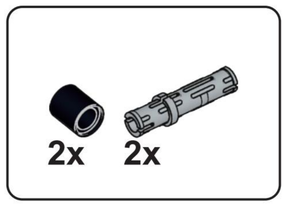

D30

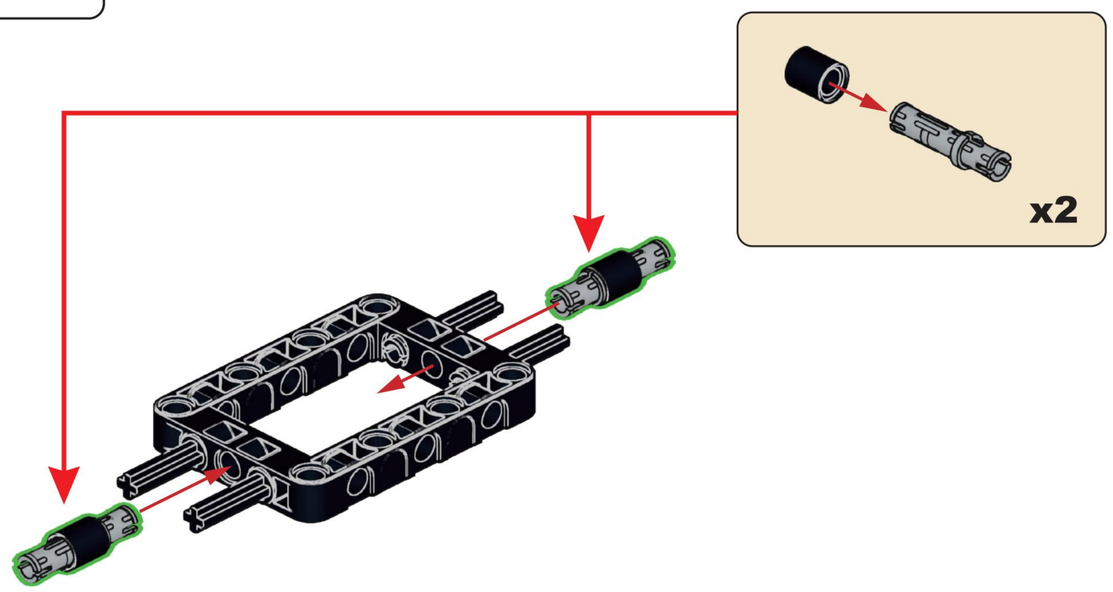

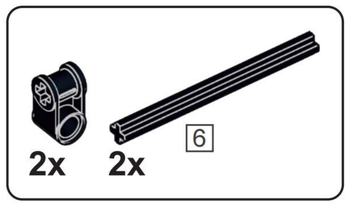

D31

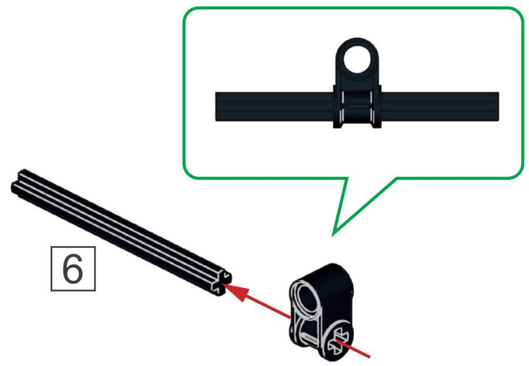

x2

2x

D32

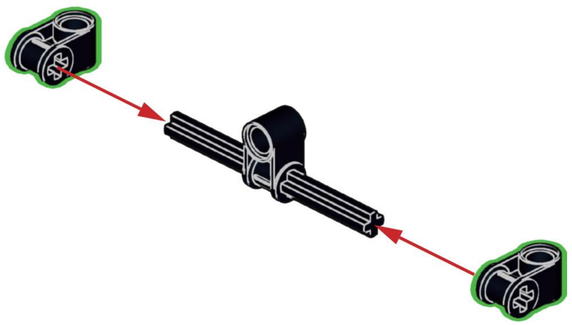

2x

D33

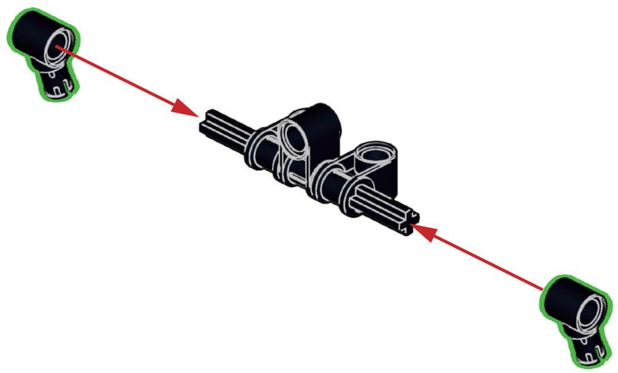

2x

D34

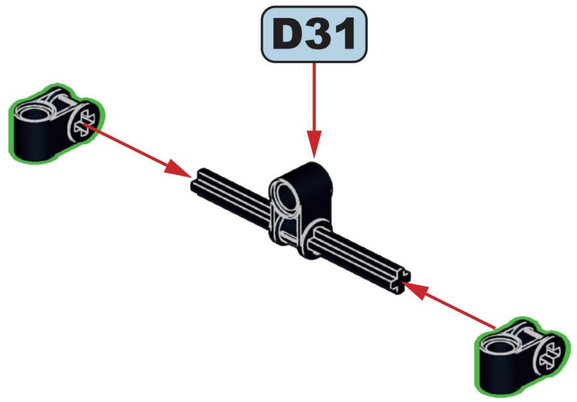

1x 2x

D35

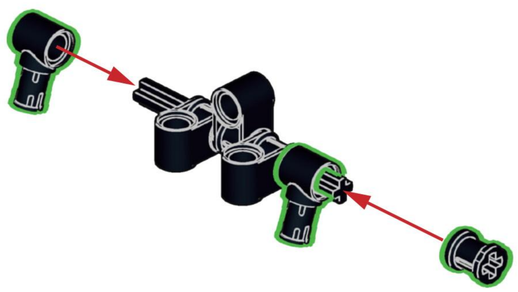

D36

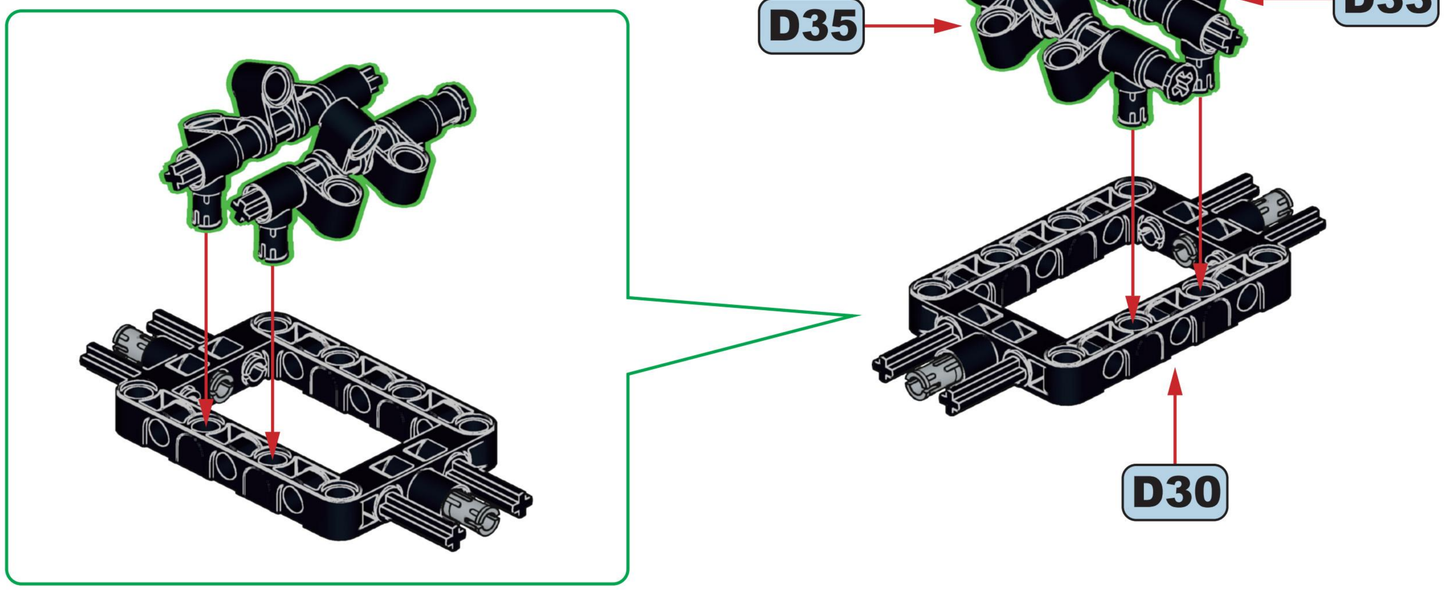

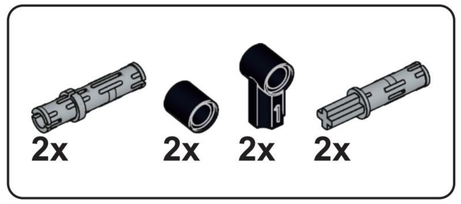

D37

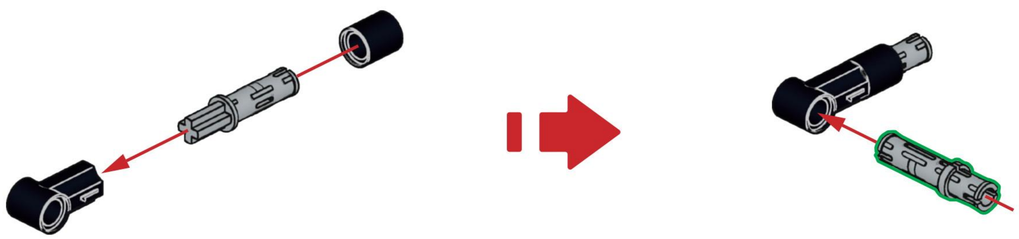

x2

D38

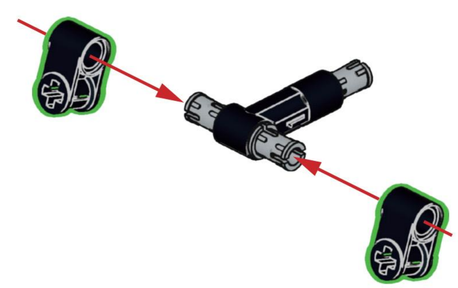

x2

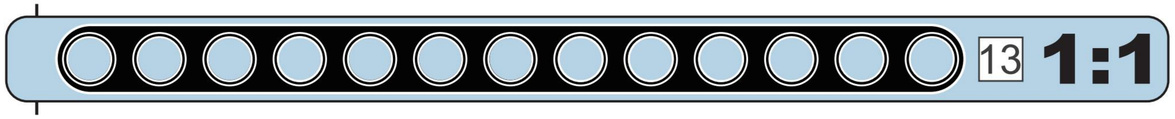

D39

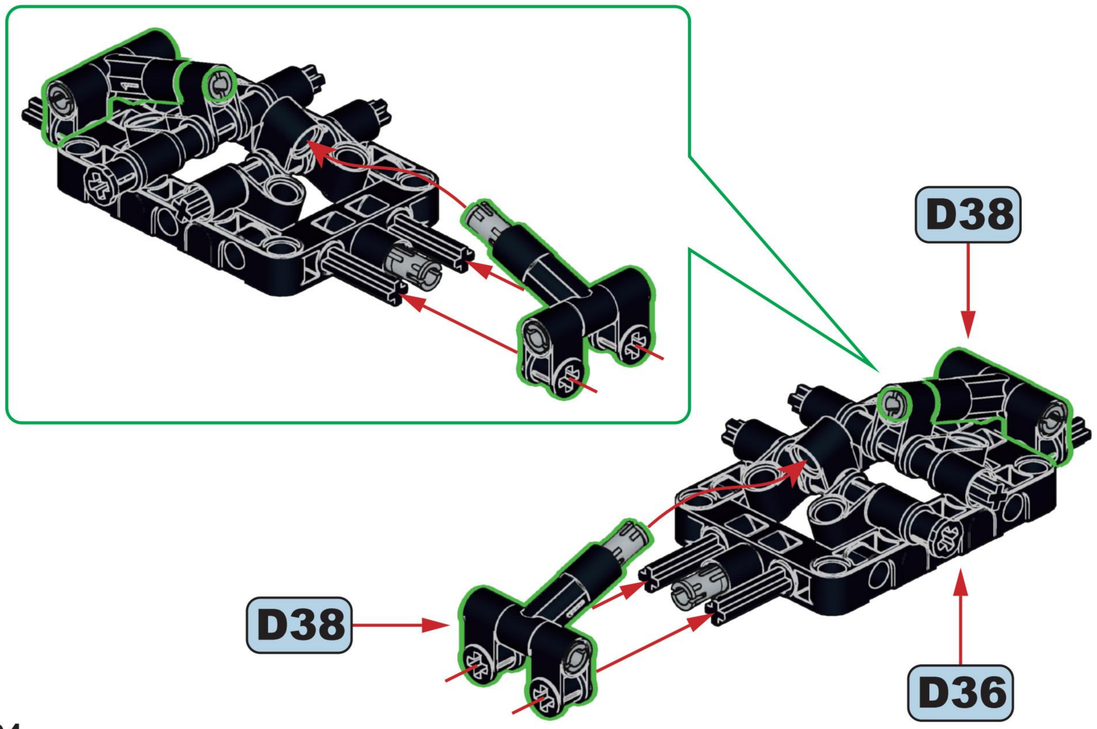

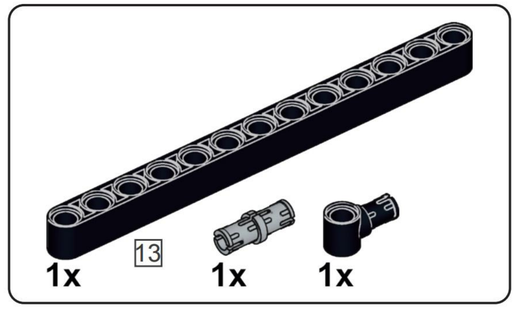

D40

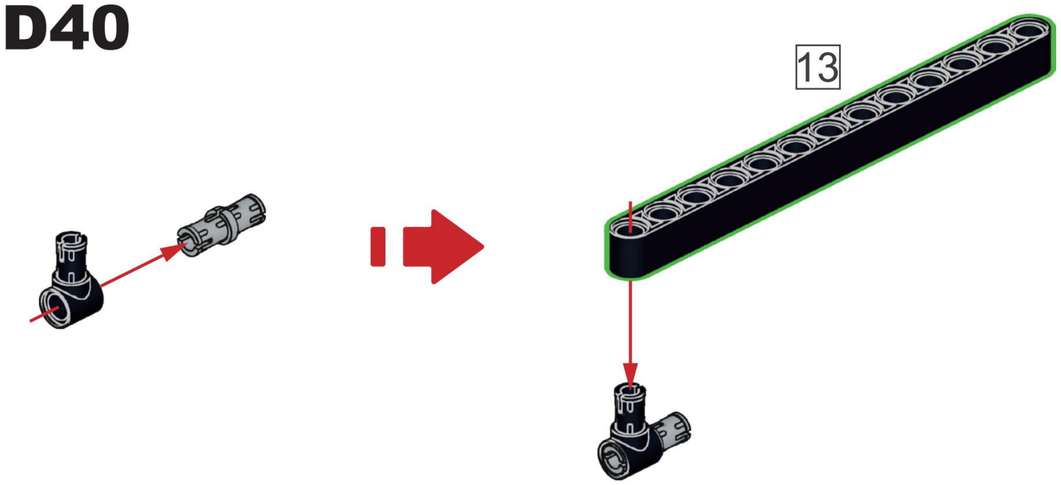

D41

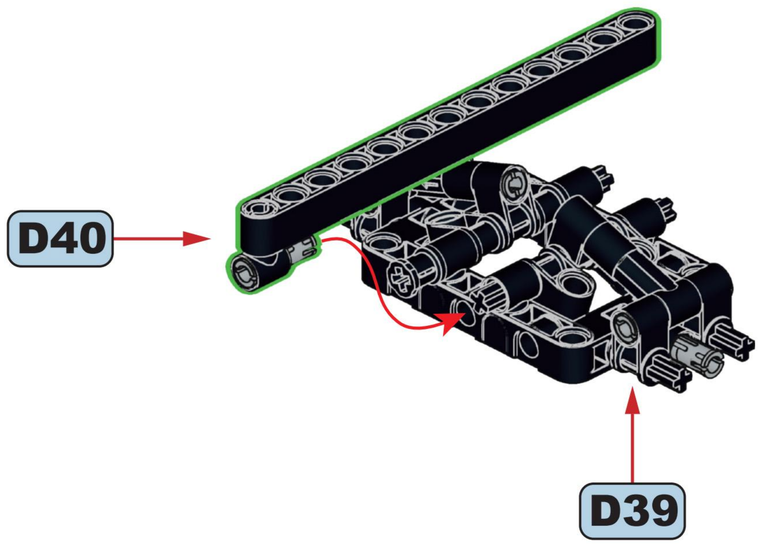

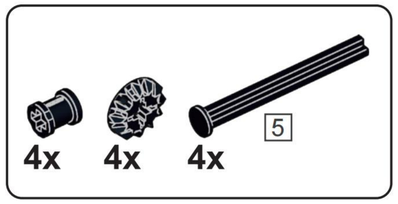

D42

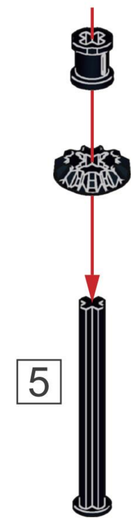



x4

D43

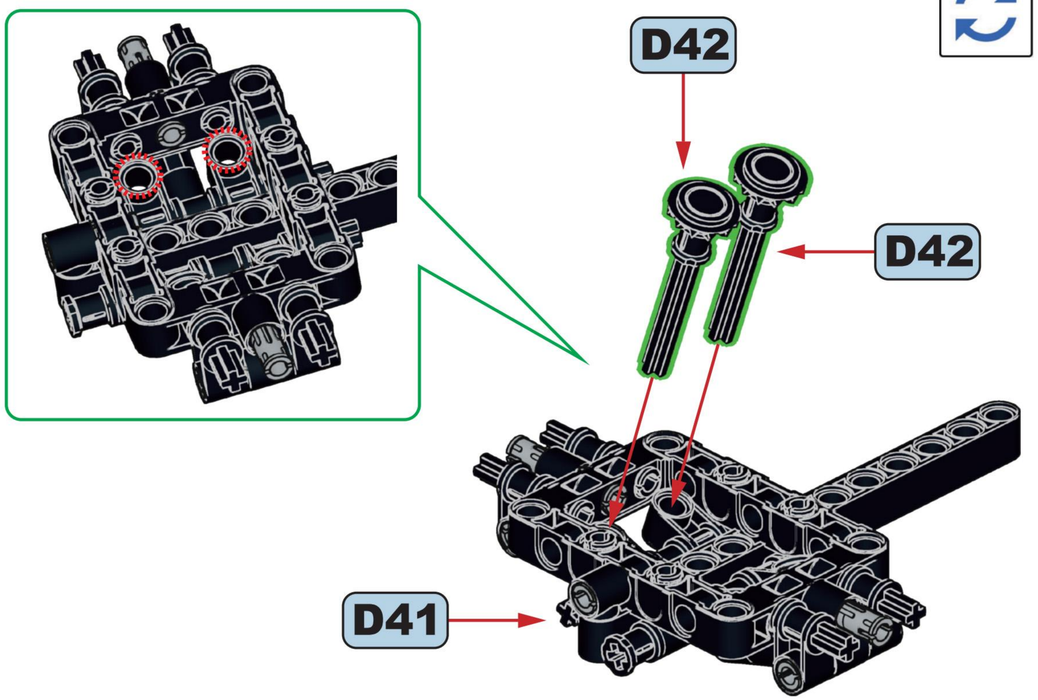

D44

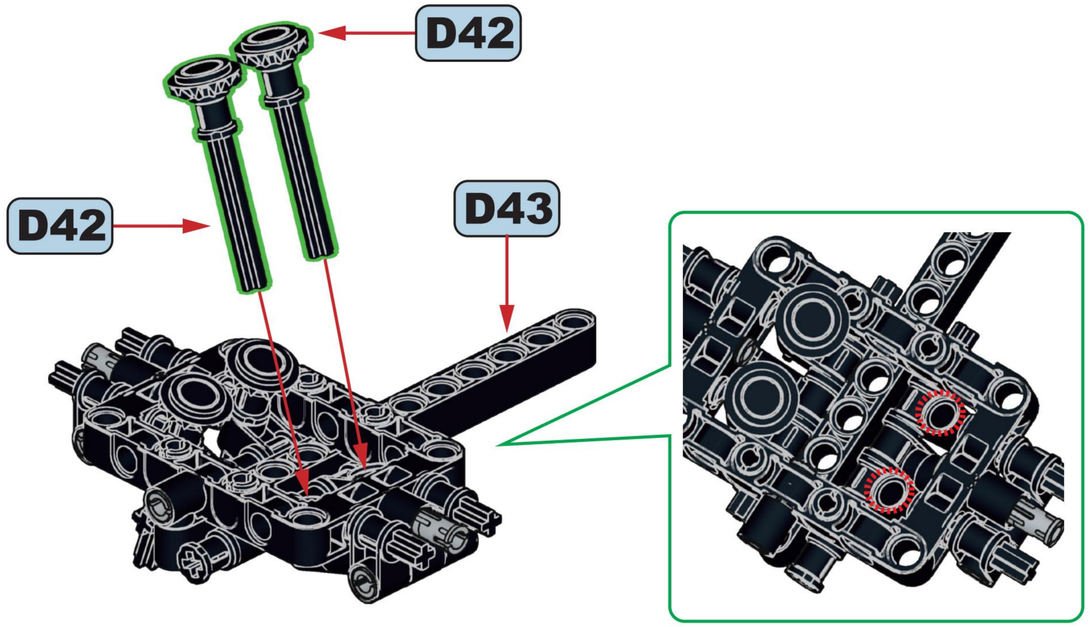

4x 4x

D45

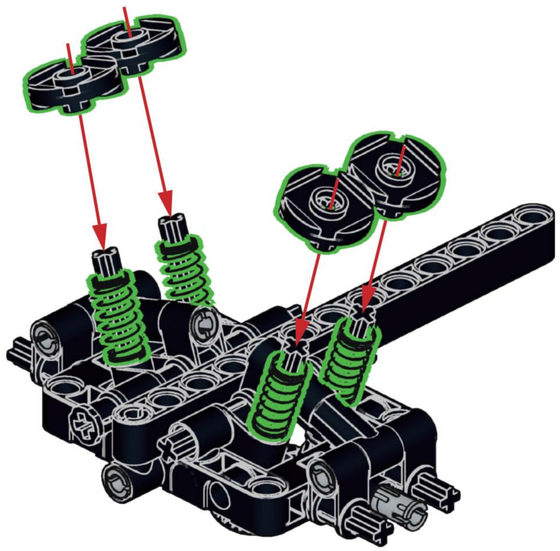

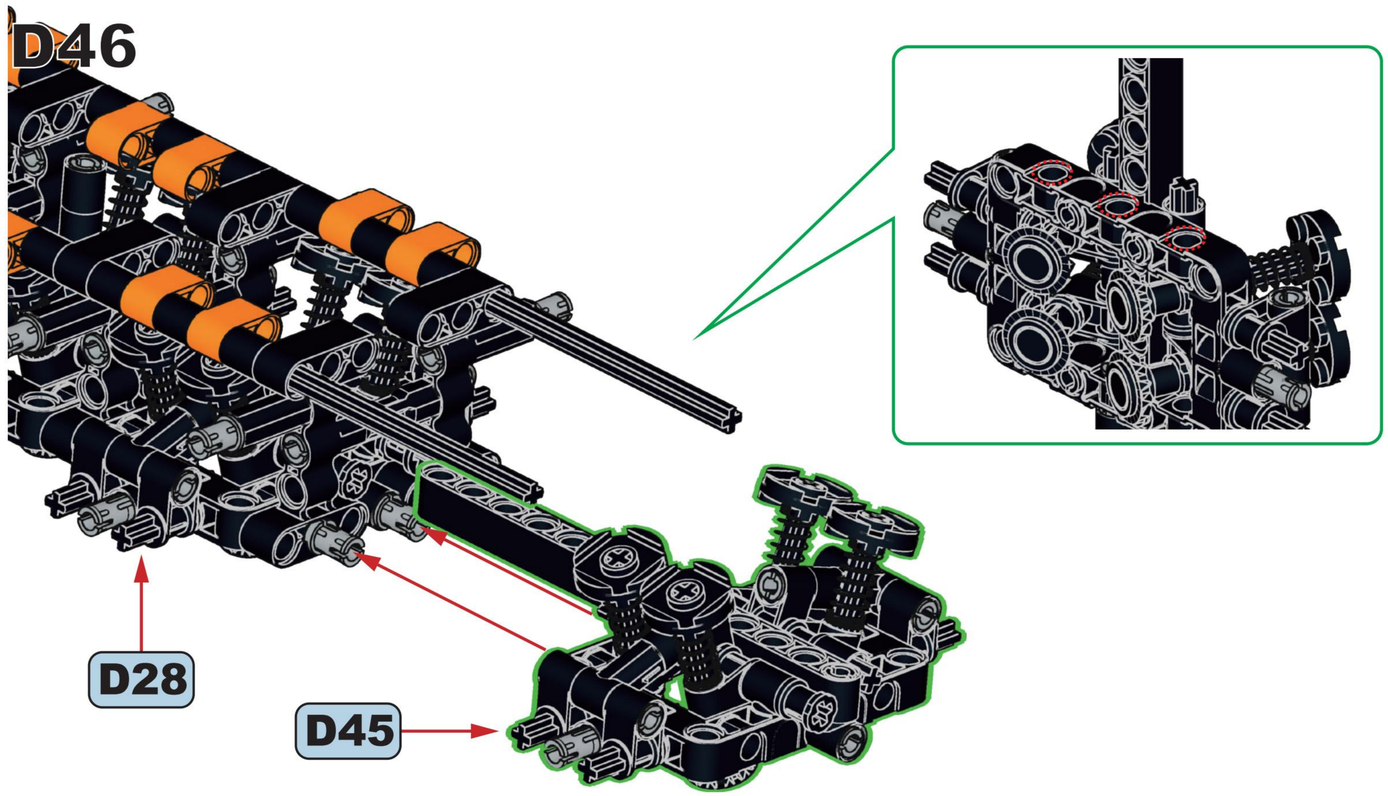

2x

D47

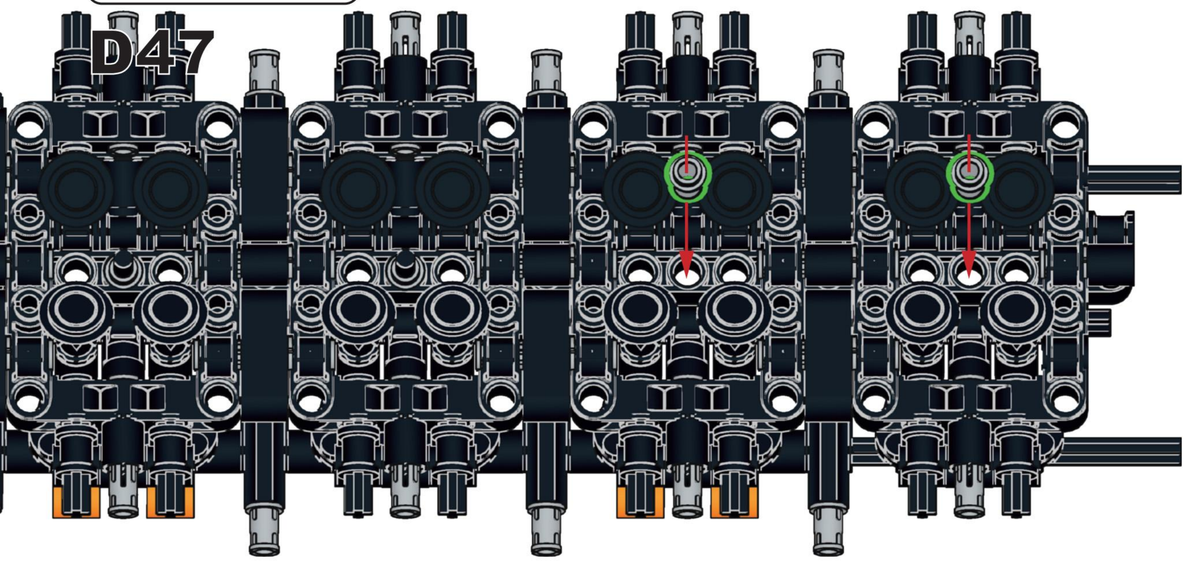

4x 2x 2x 2x

D48

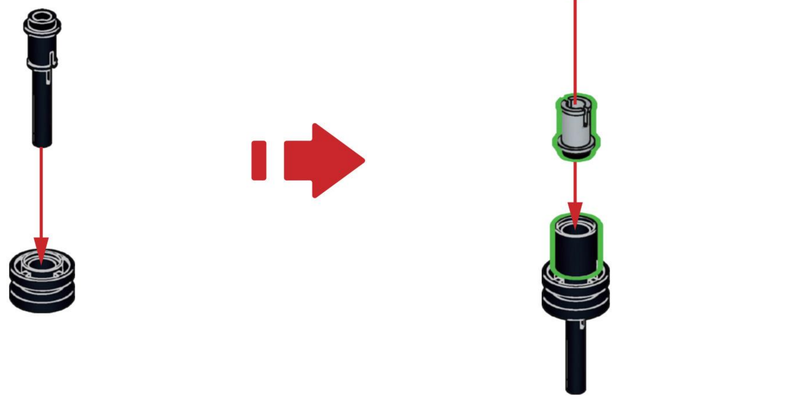

D49

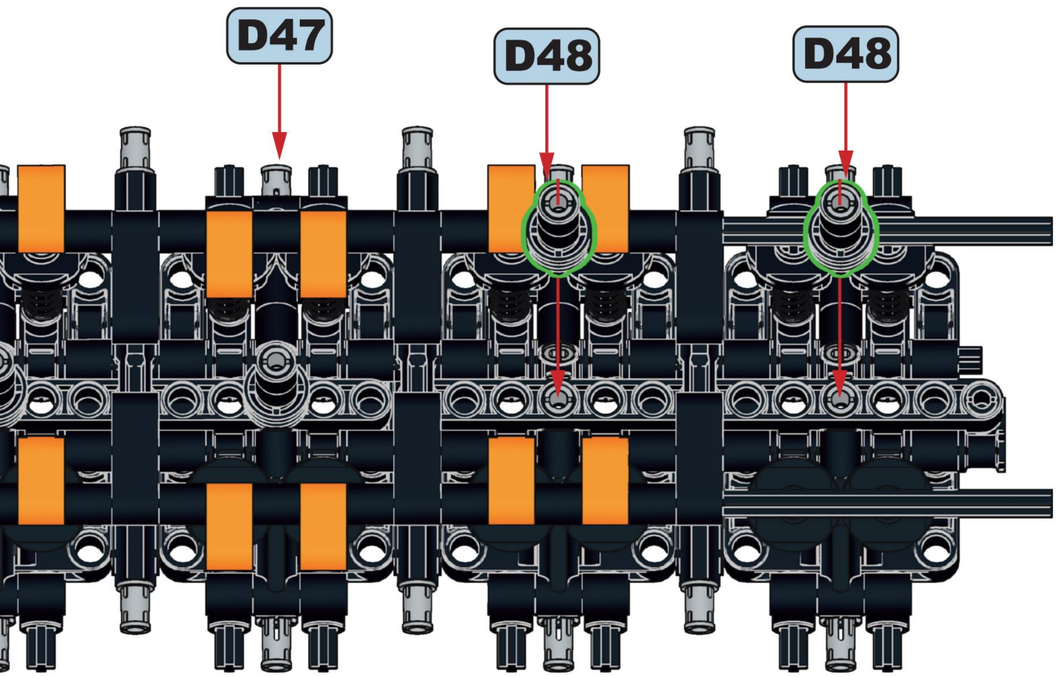

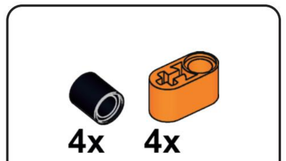

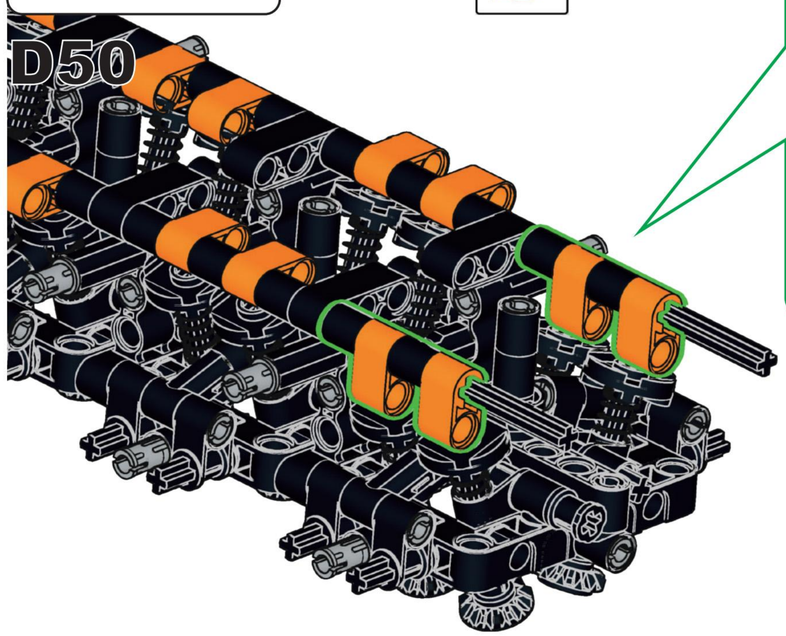

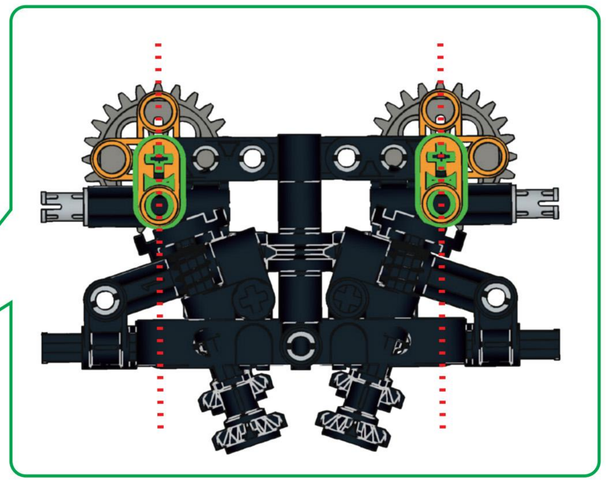

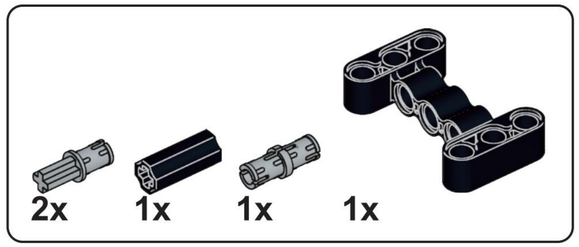

D51

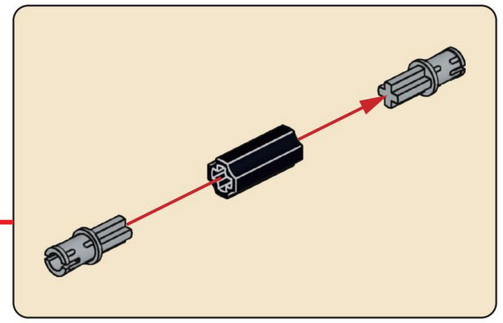

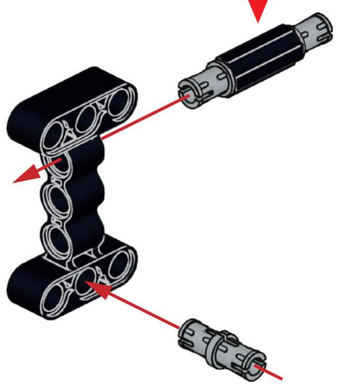

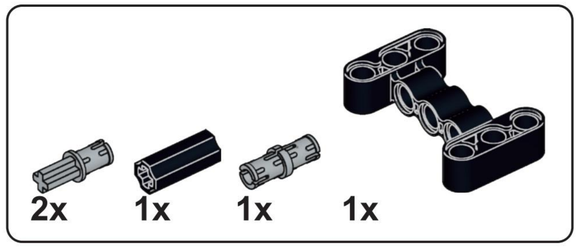

D52

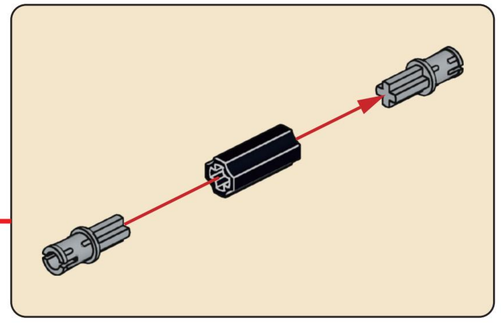

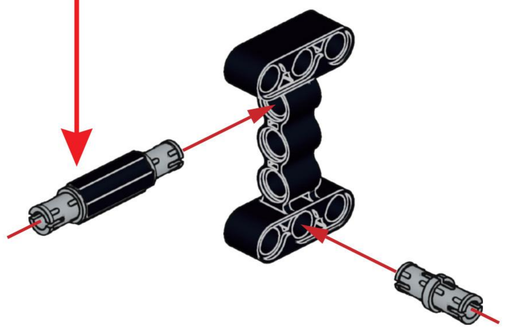

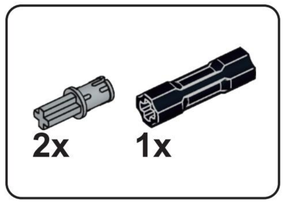

D53

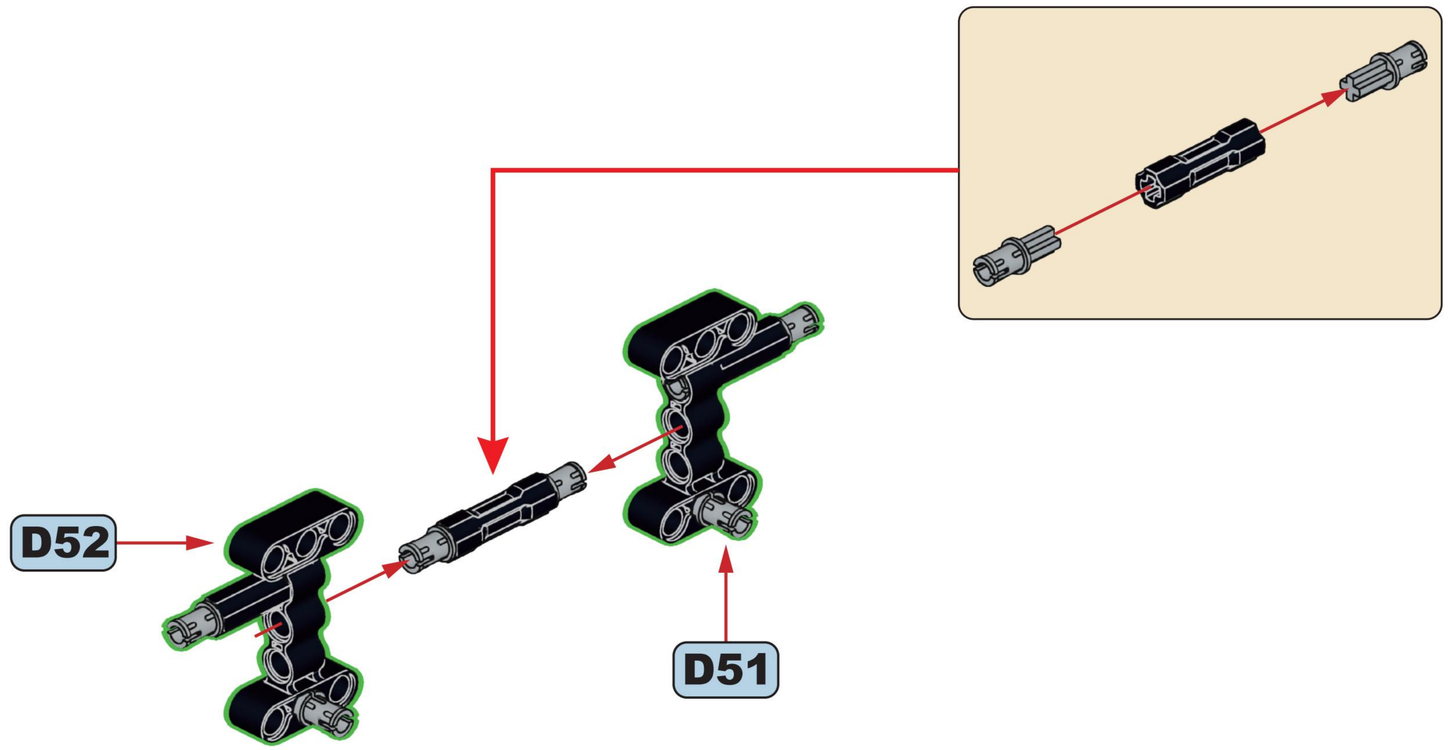

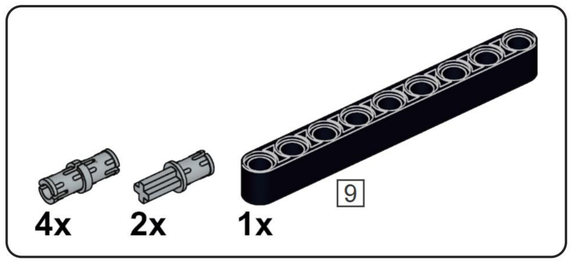

D54

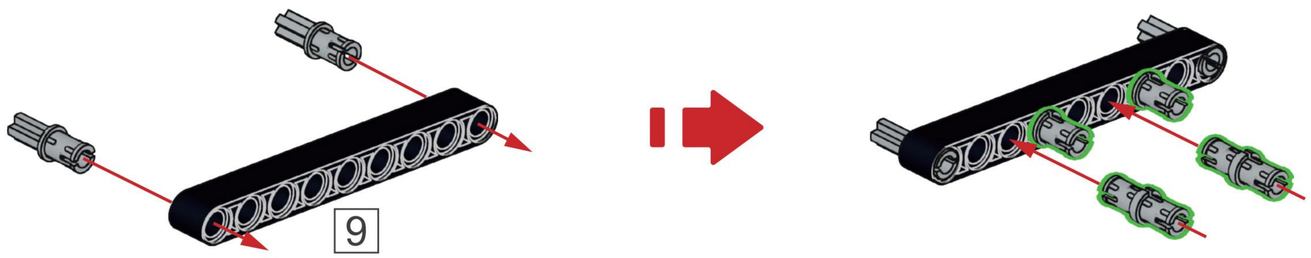

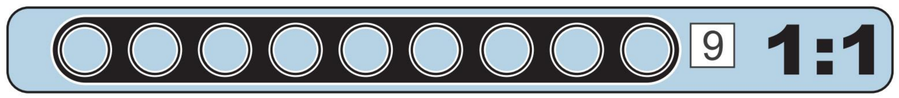

D55

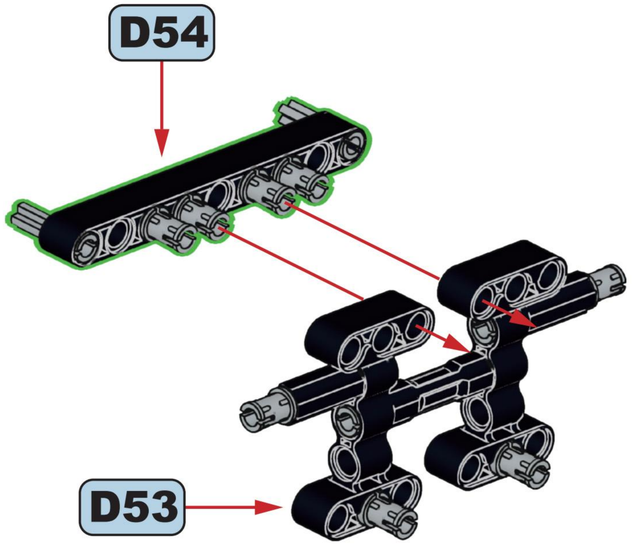

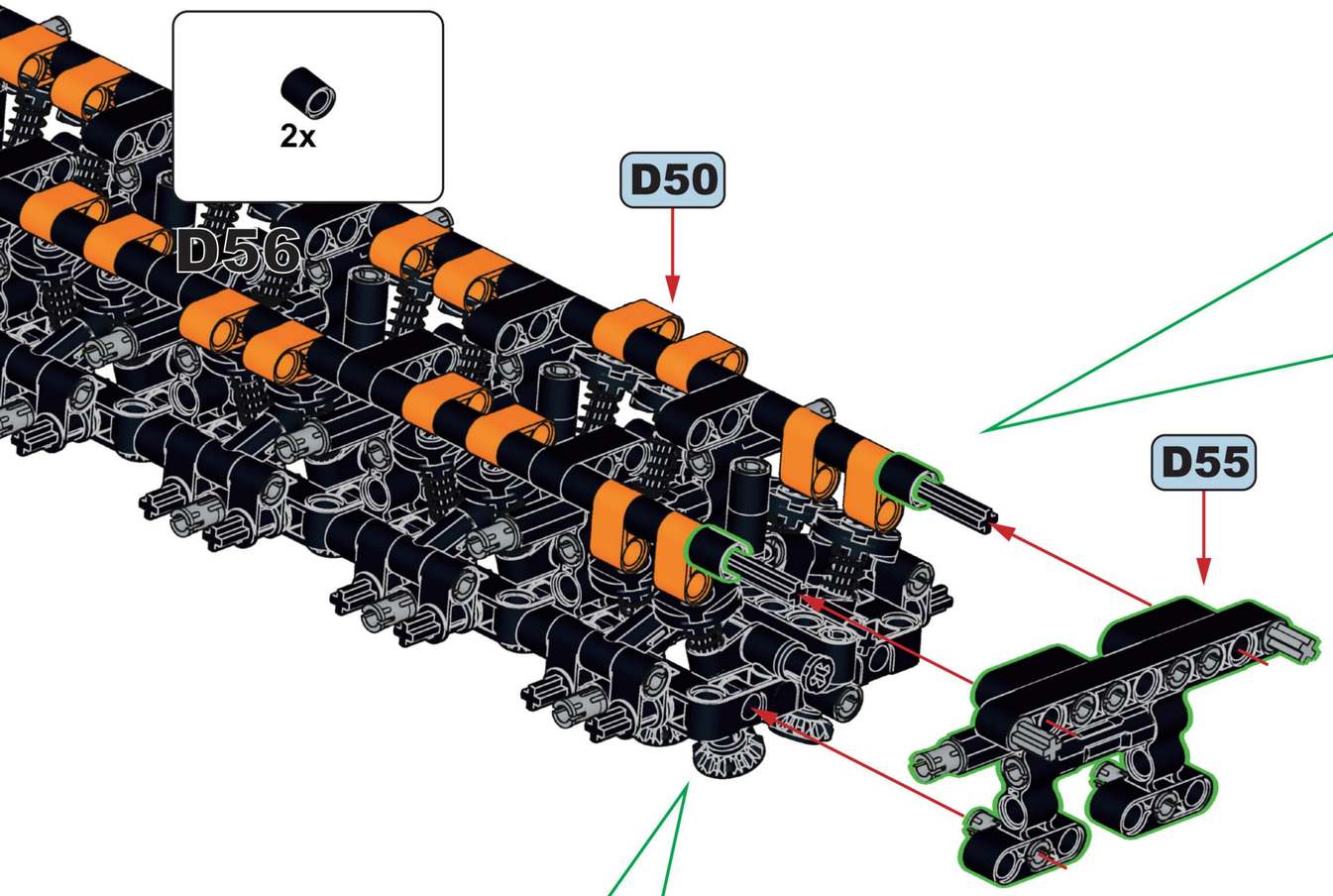
2x
D56
D50
D55

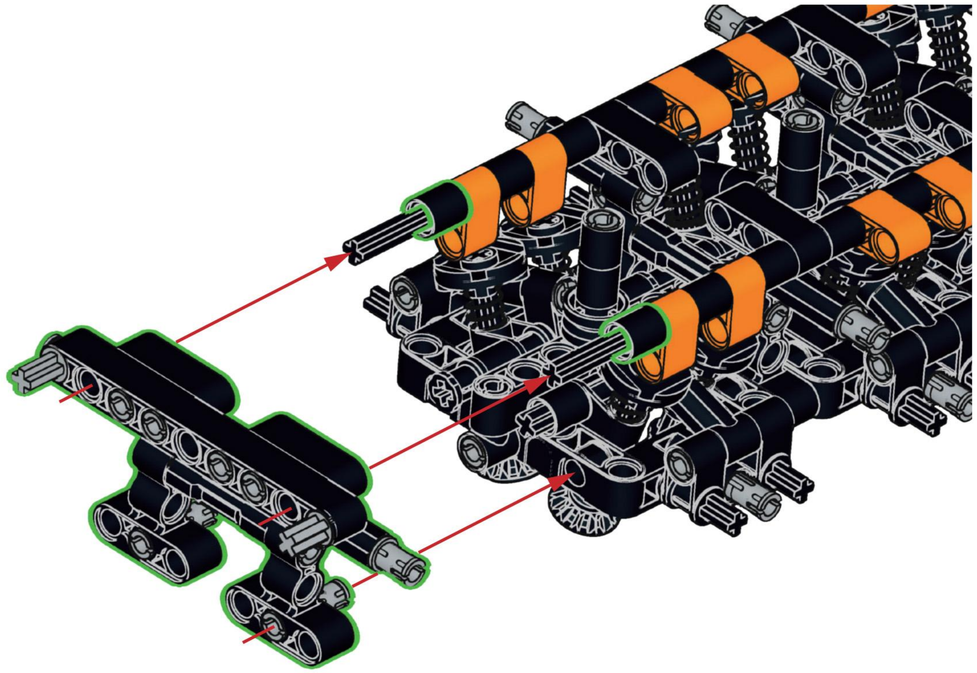

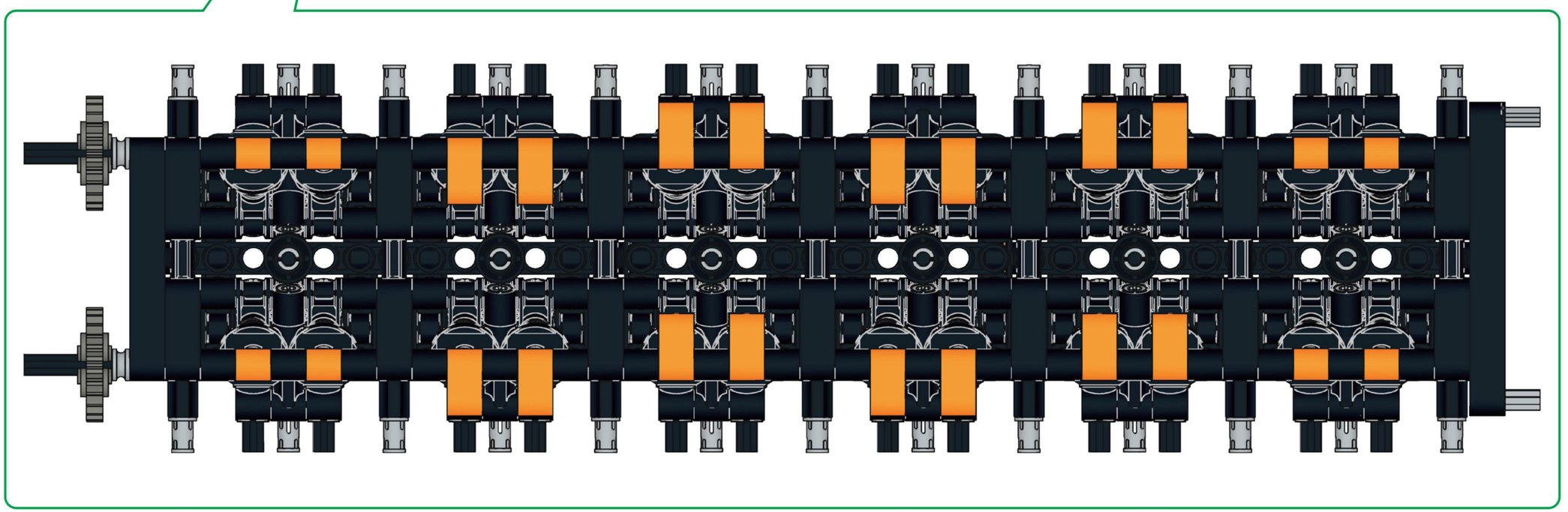

D57

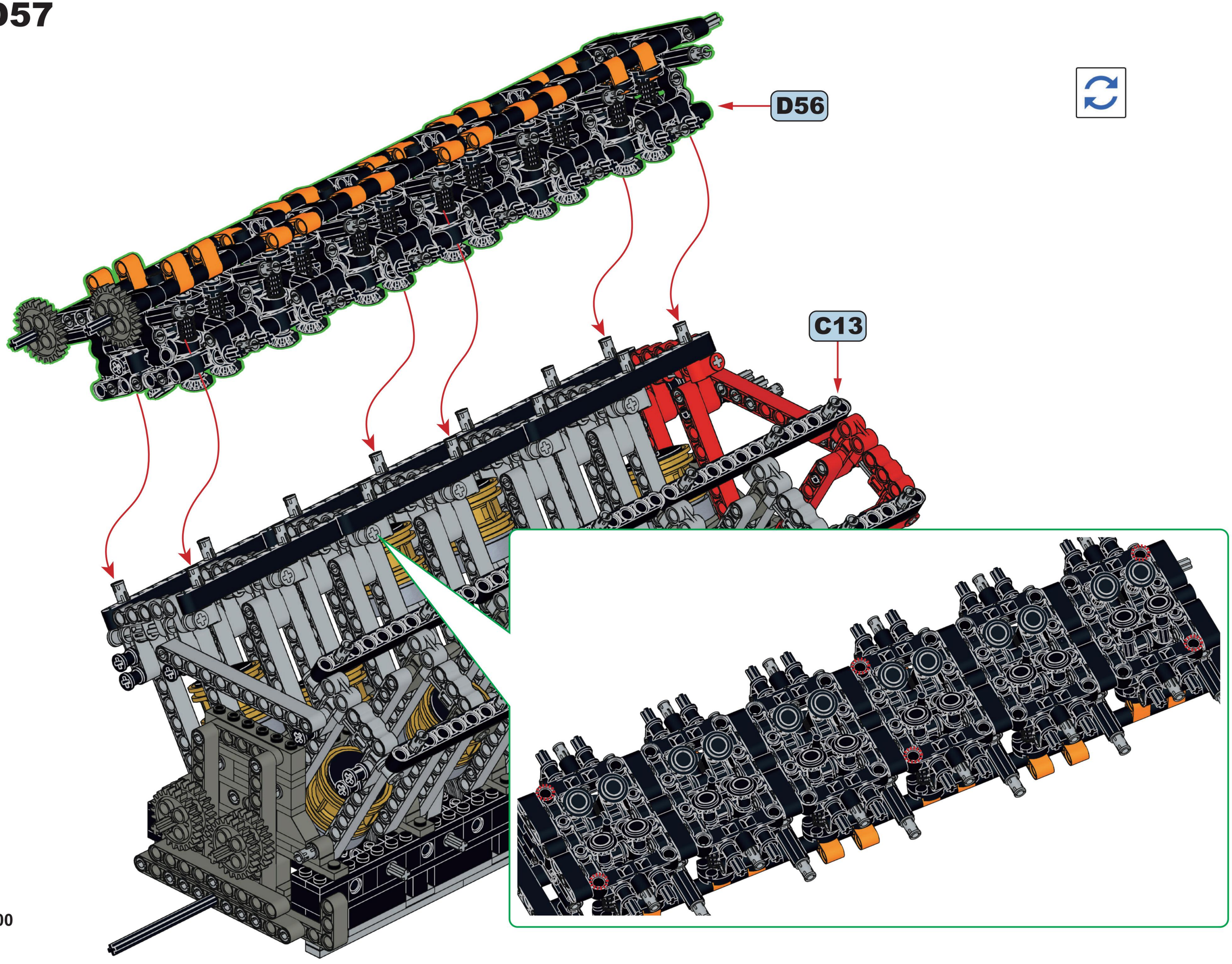

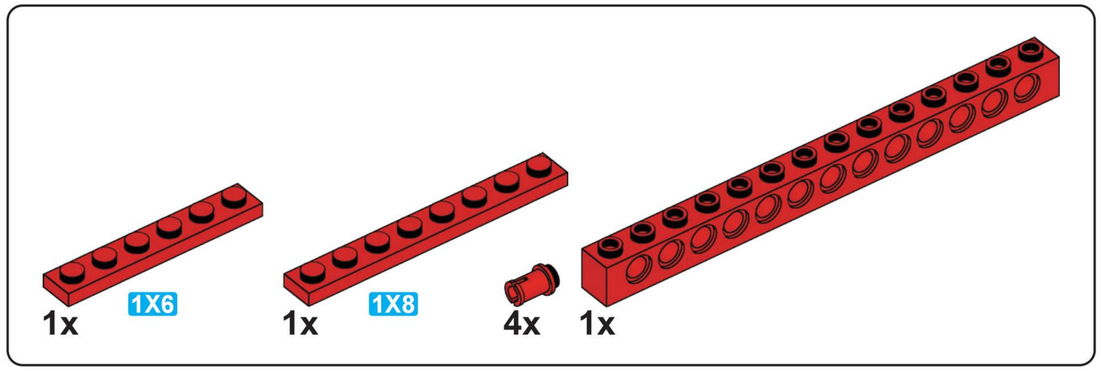

D58

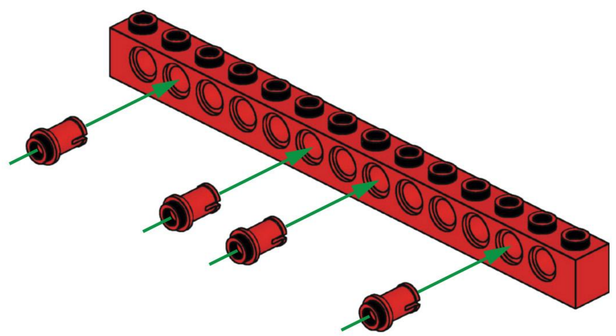

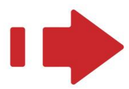

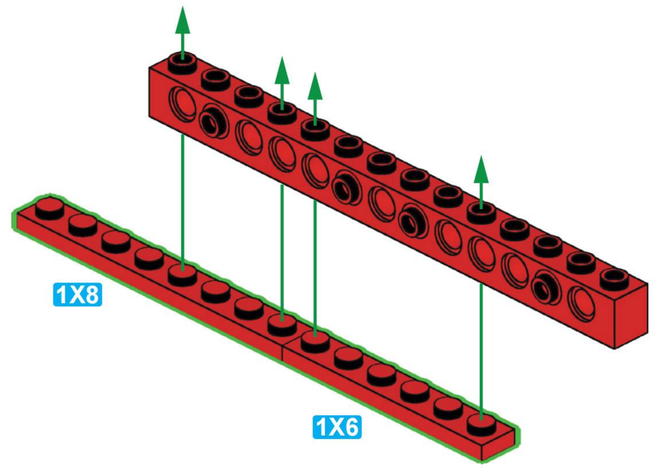

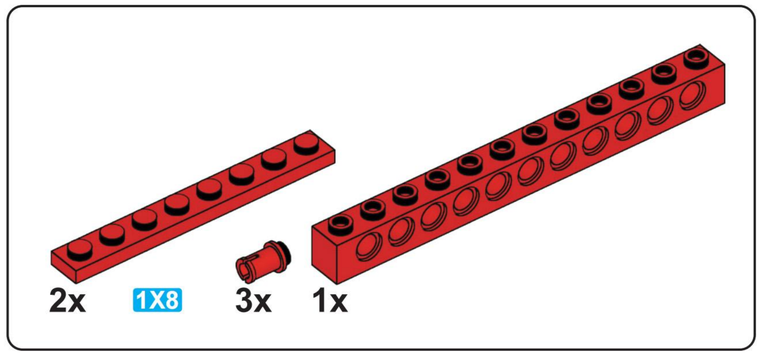

D59

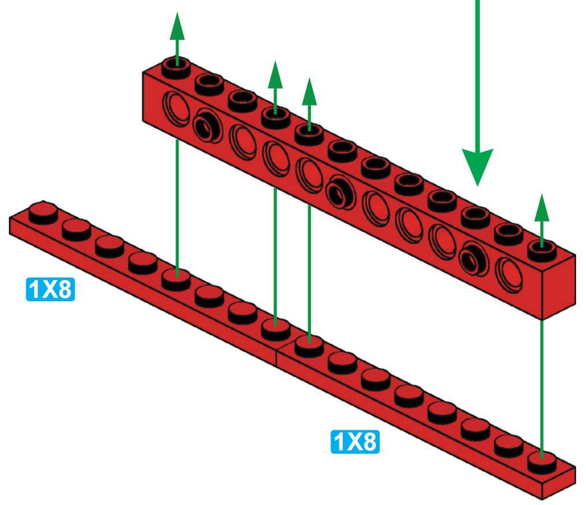

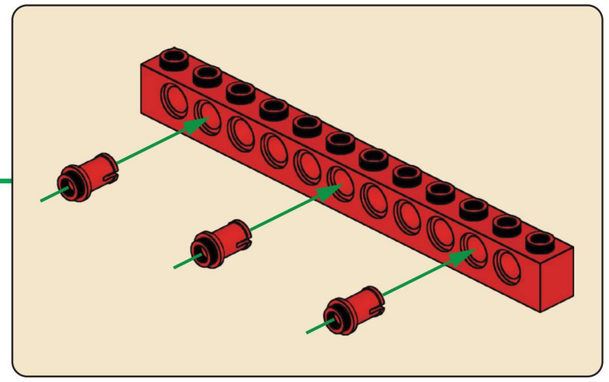

D60

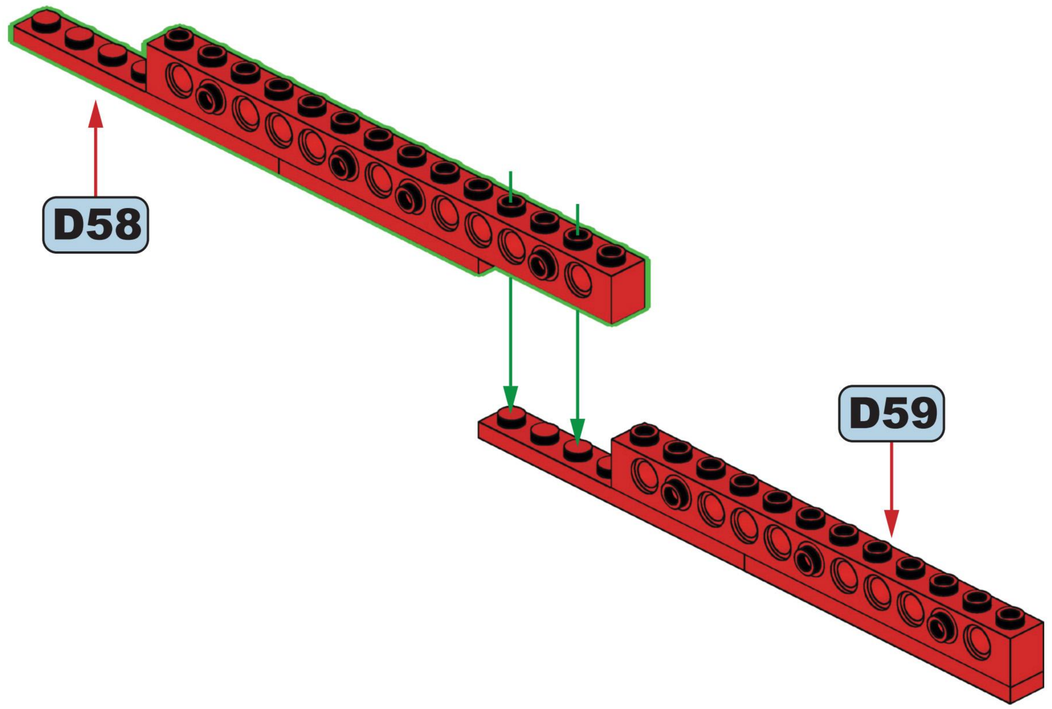

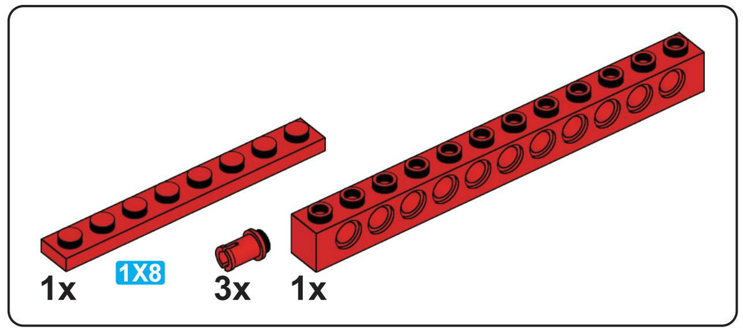

D61

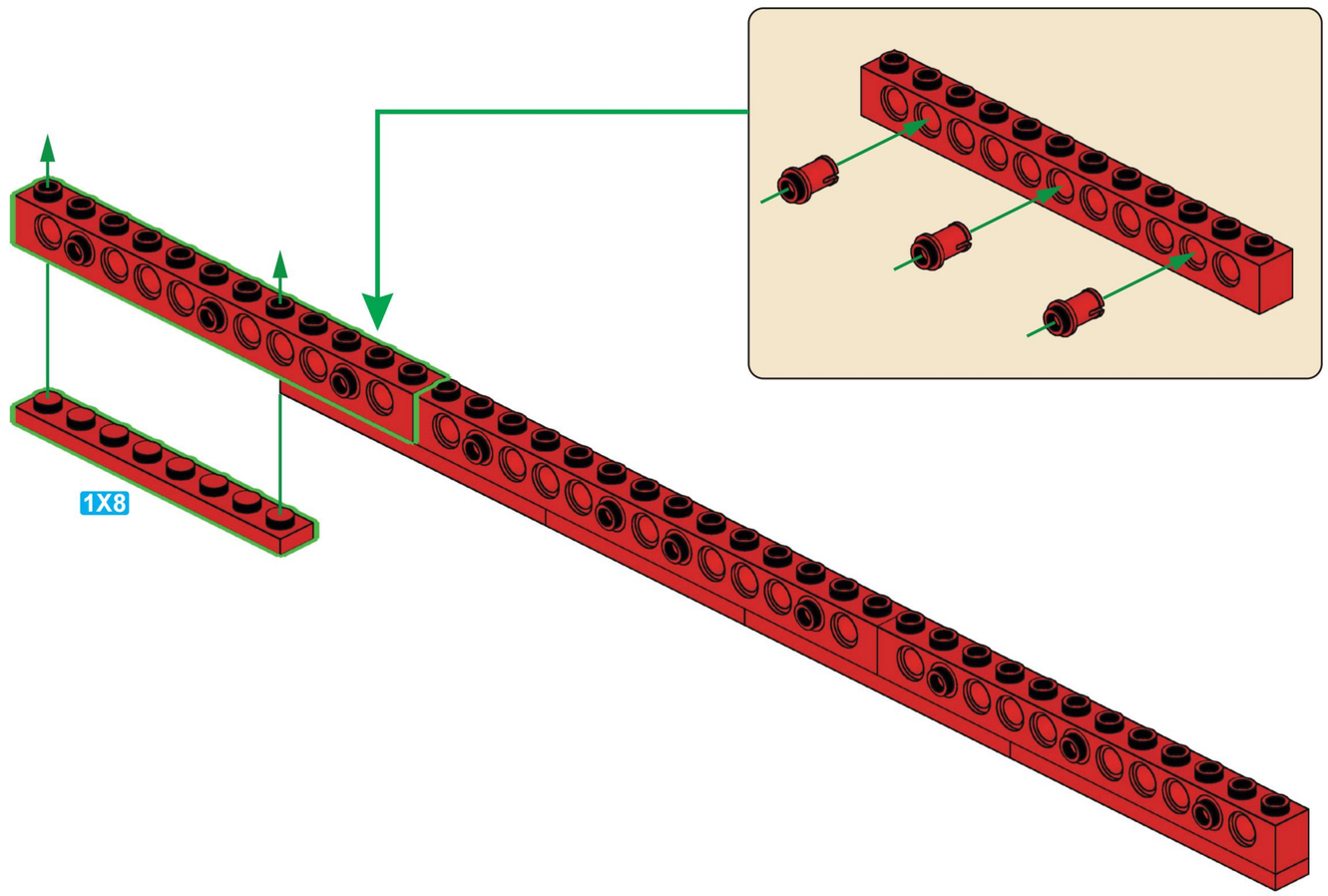

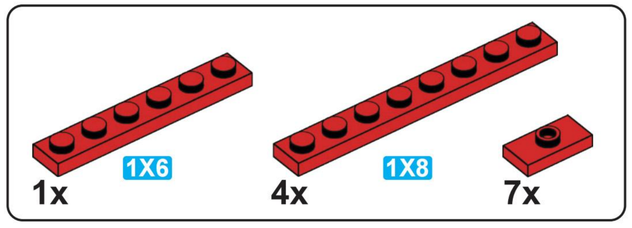

D62

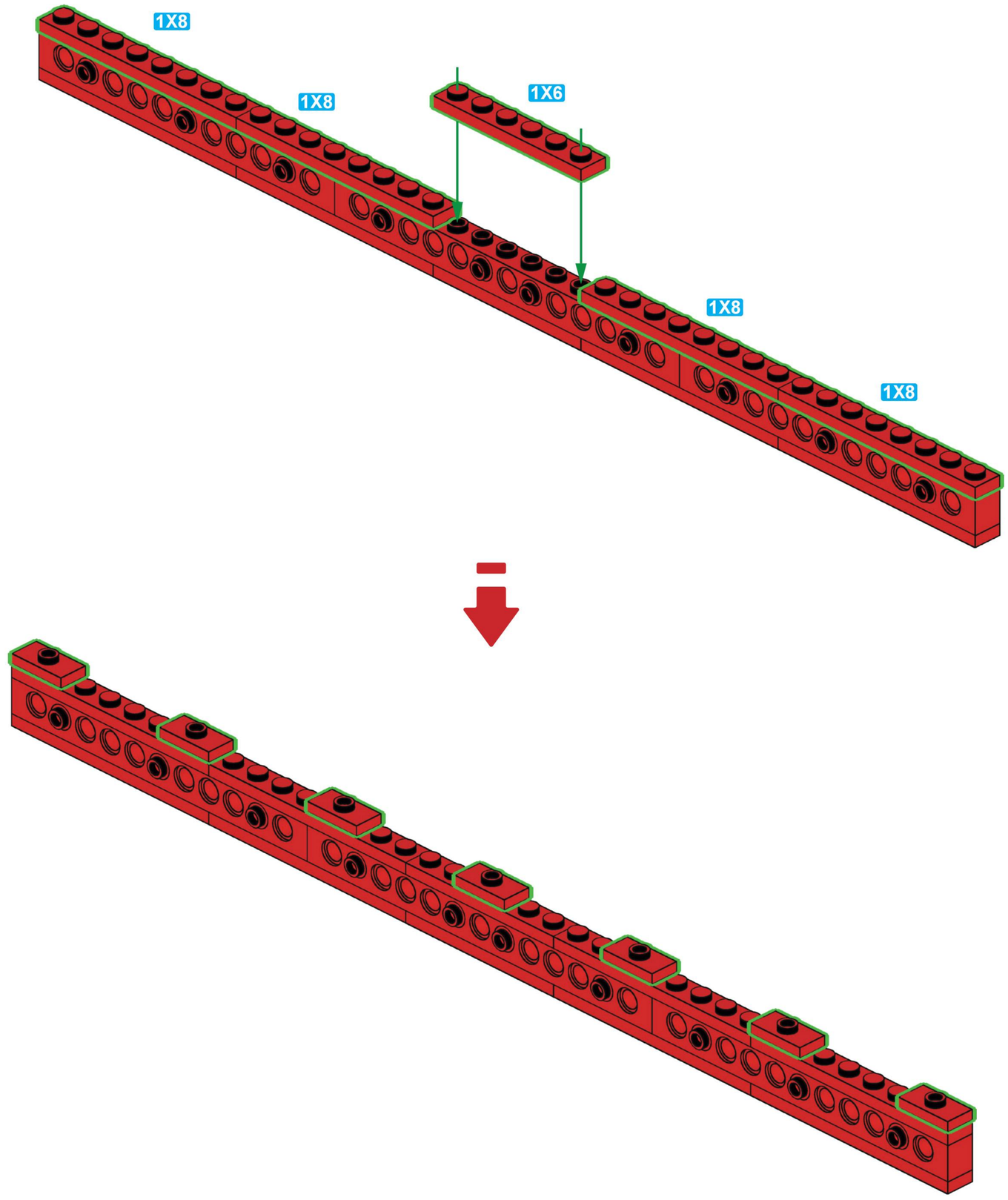

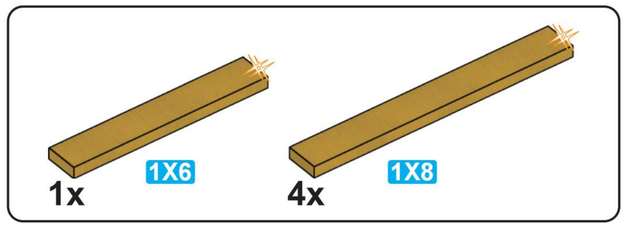

D63

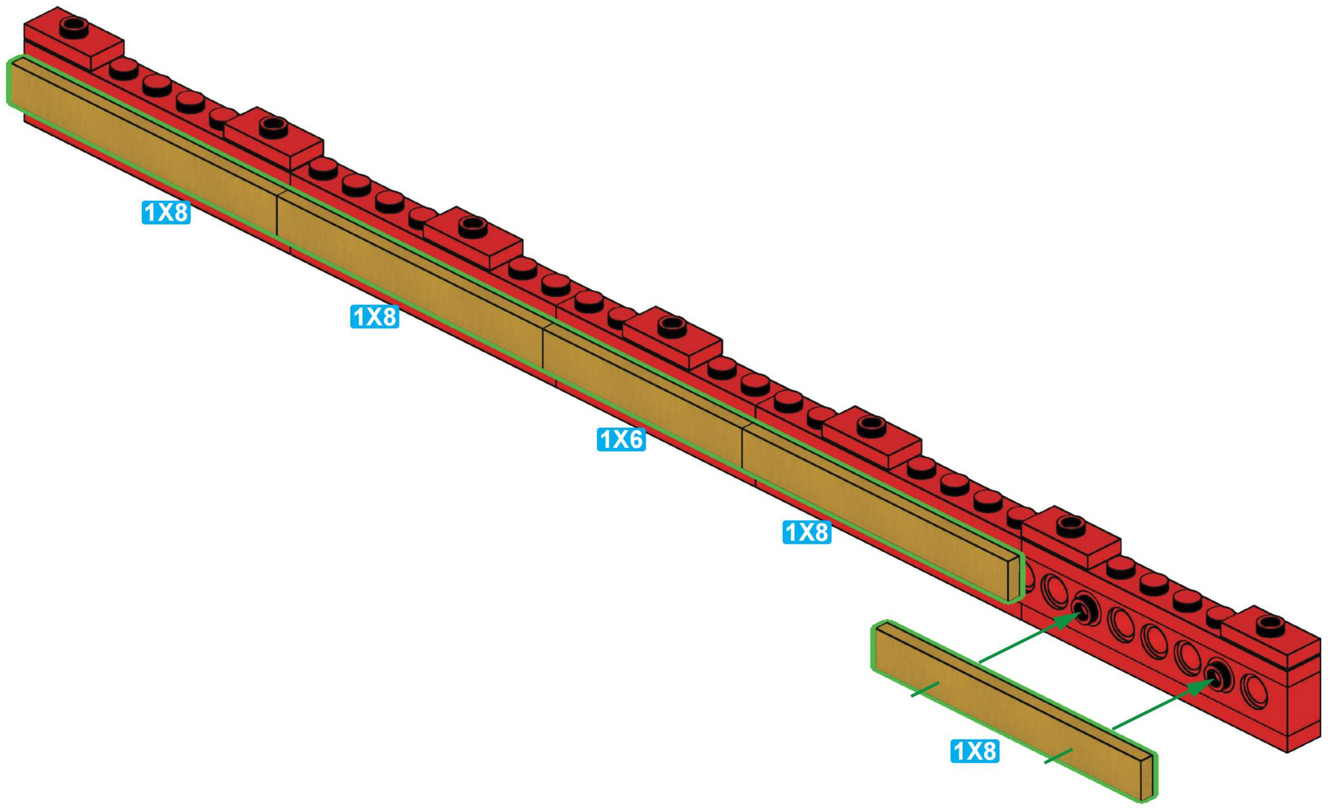

D64

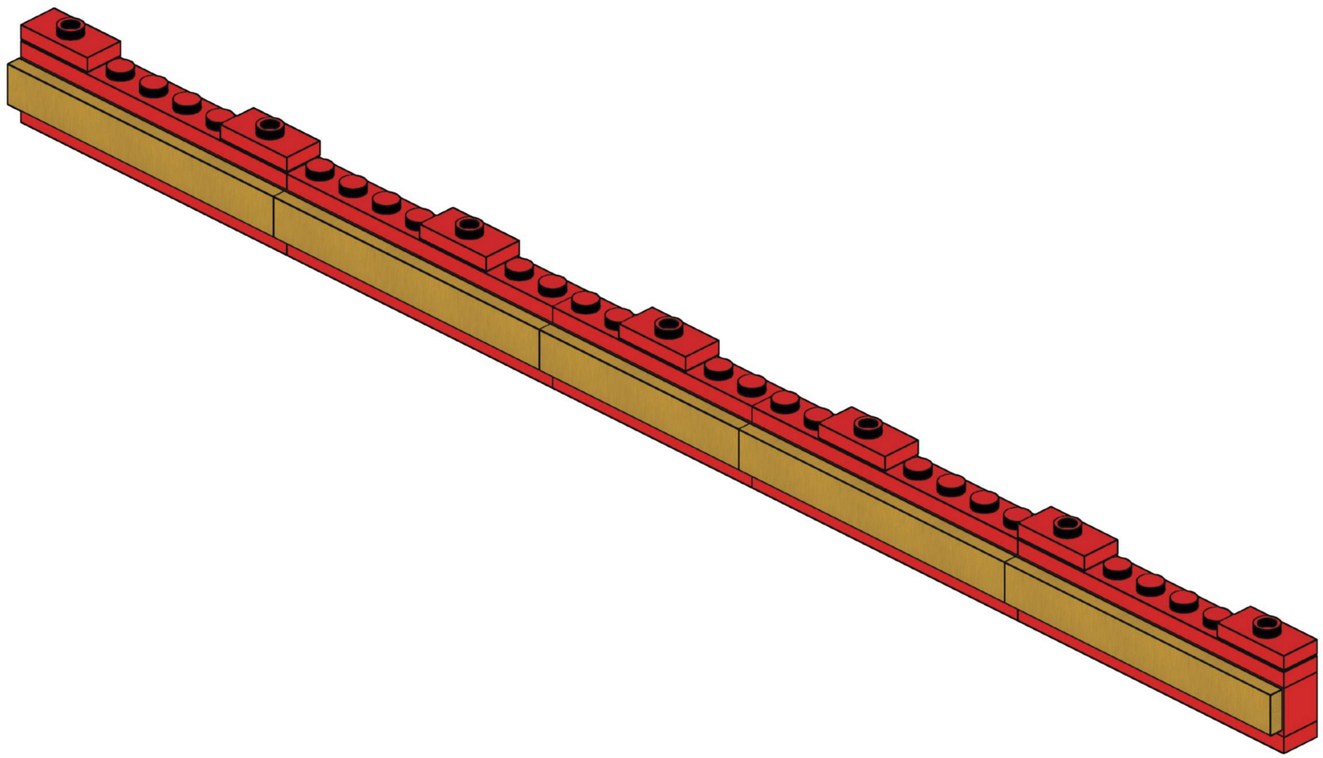

x2

D65

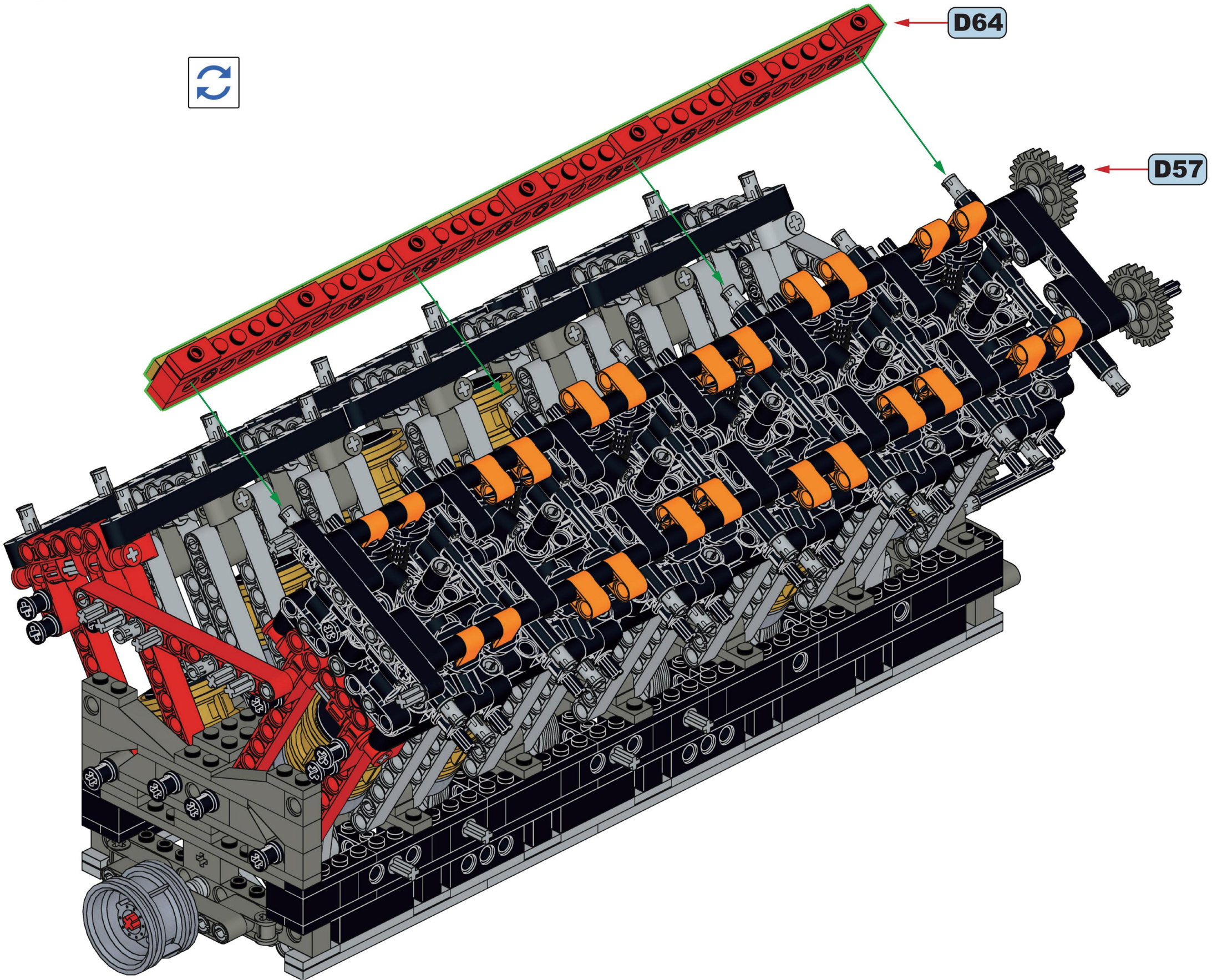

D66

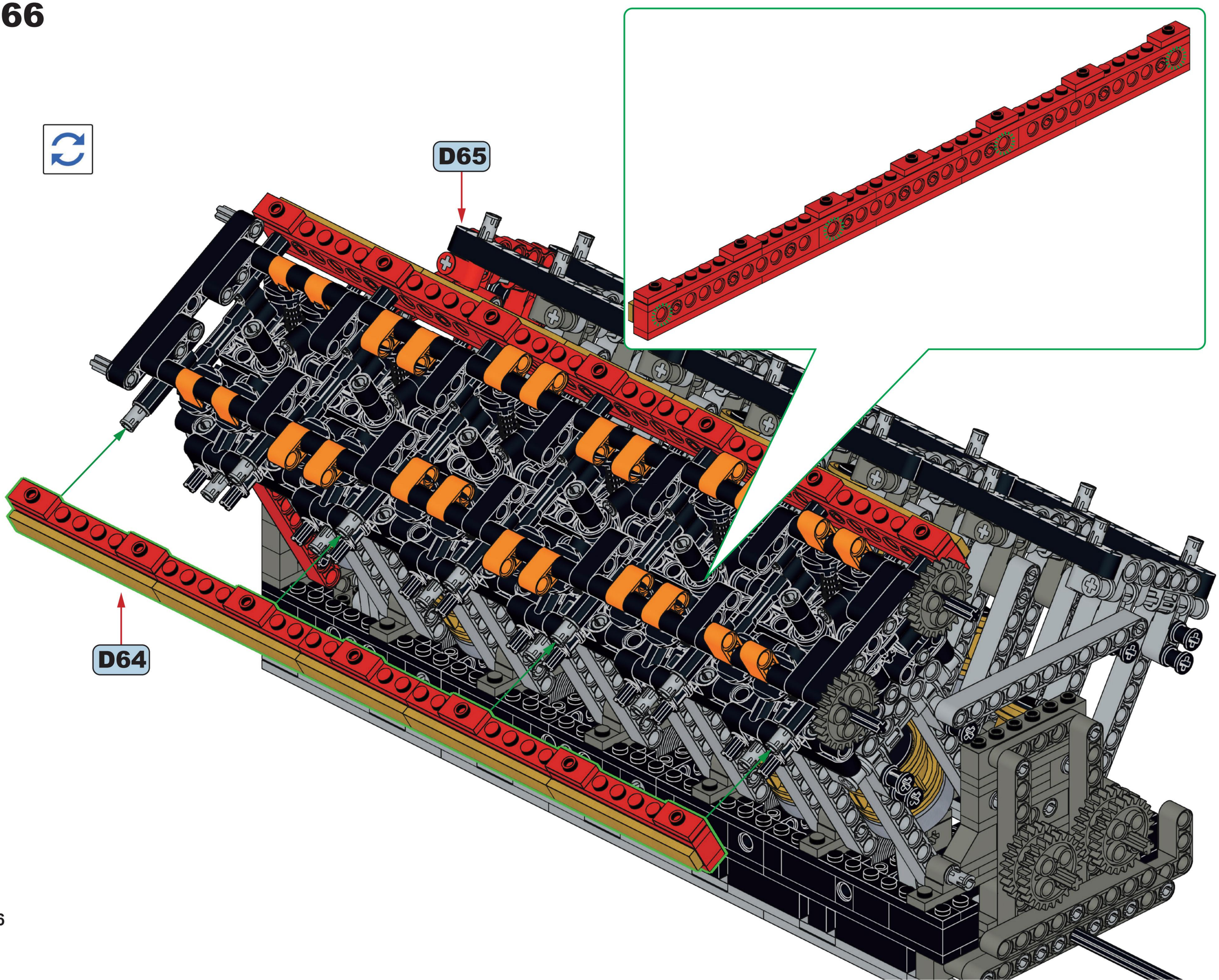

5

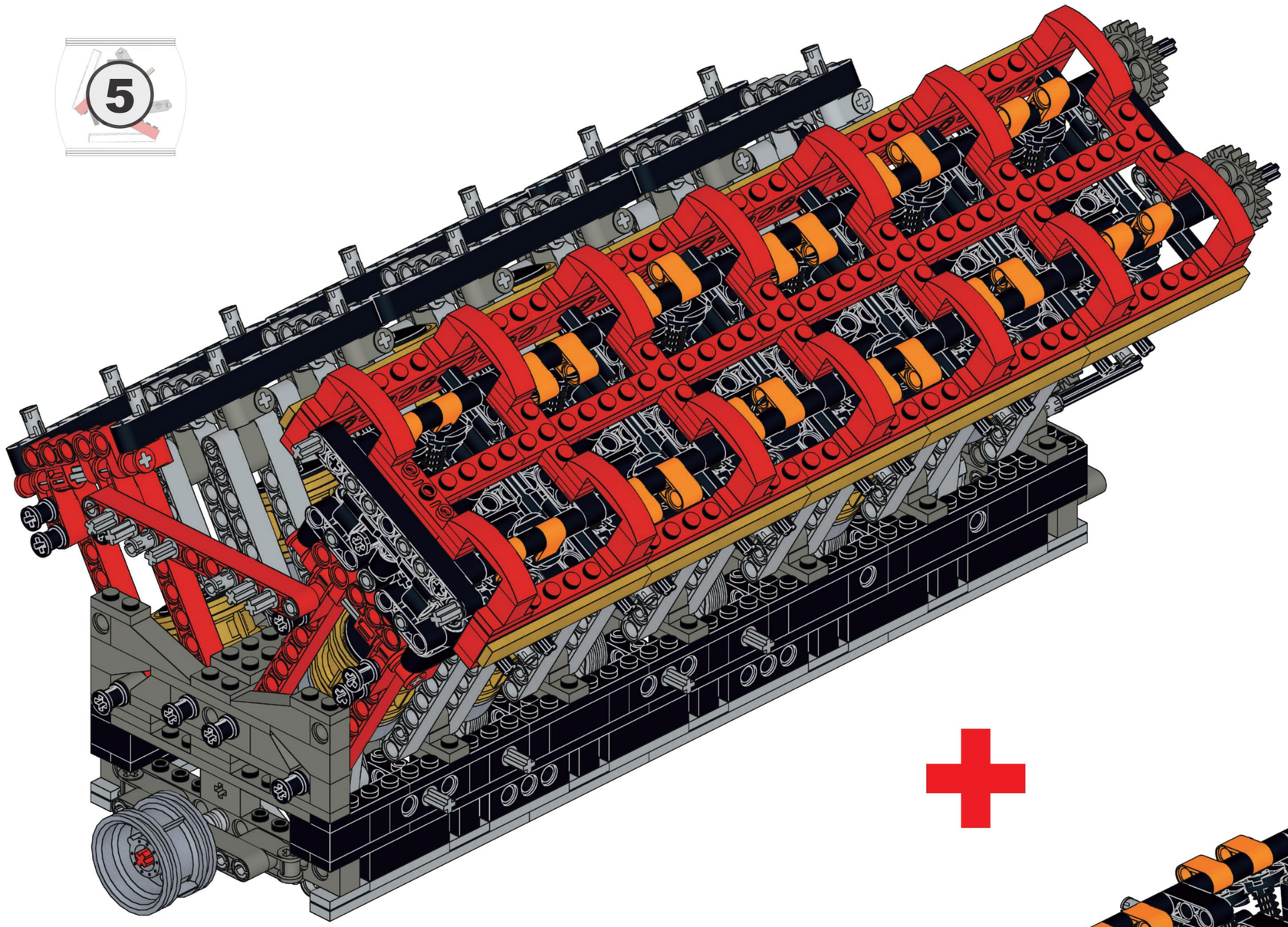

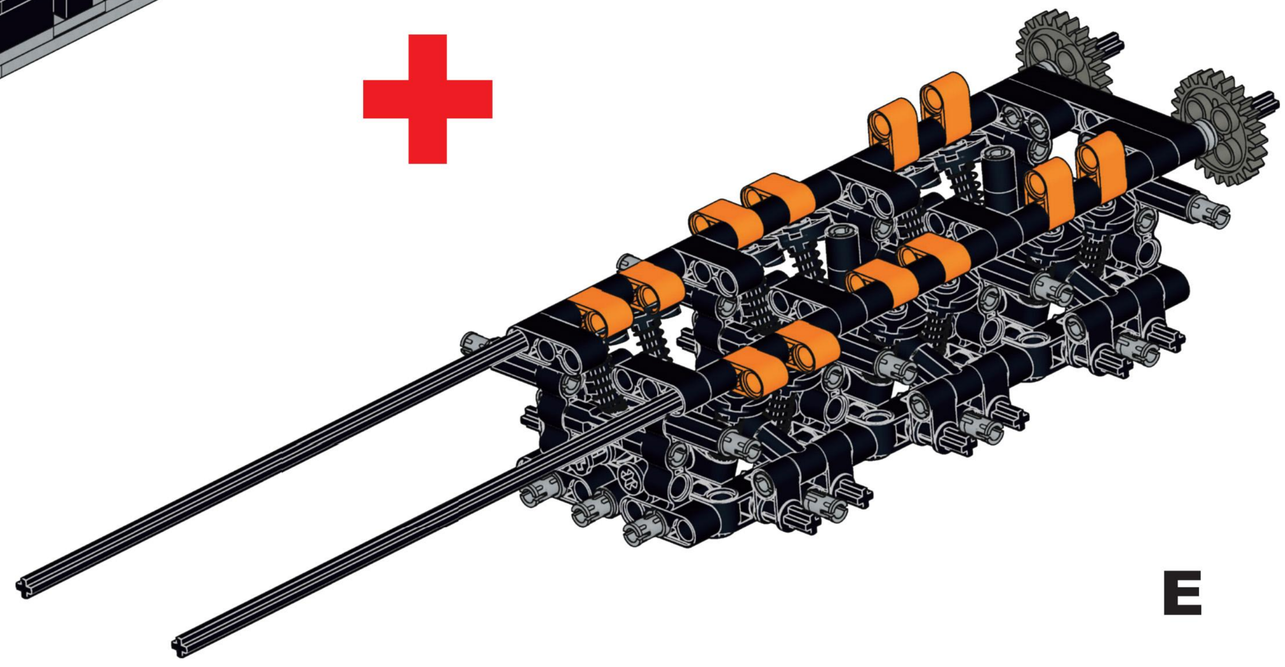

E

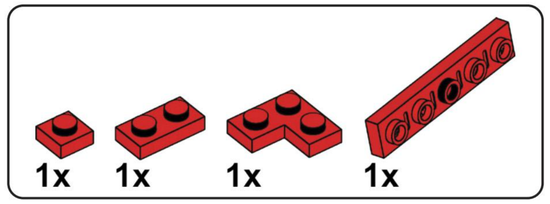

E1

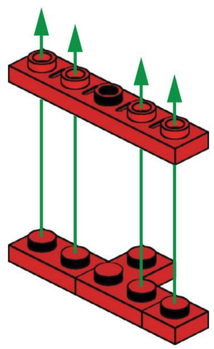

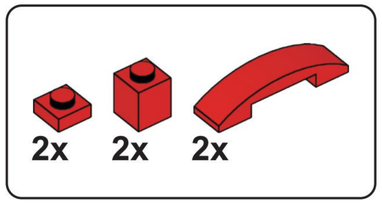

E2

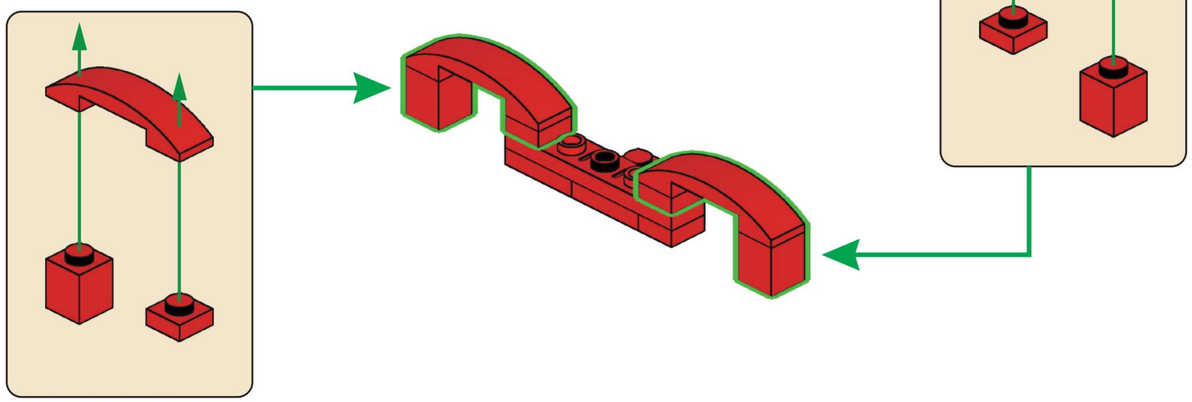

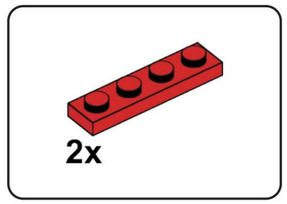

E3

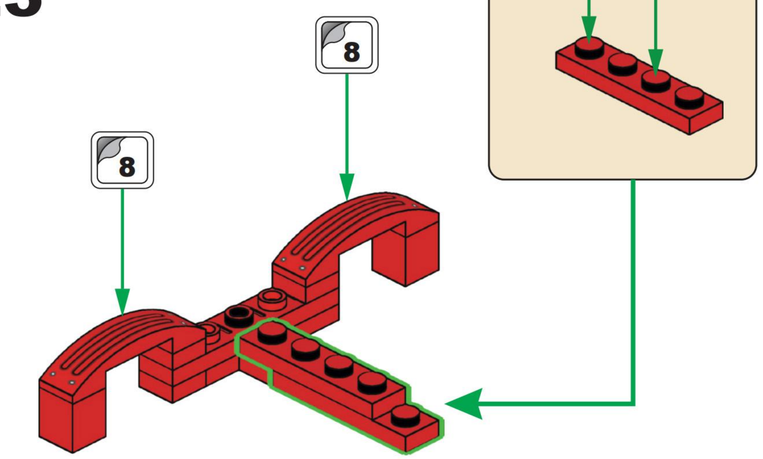

E4

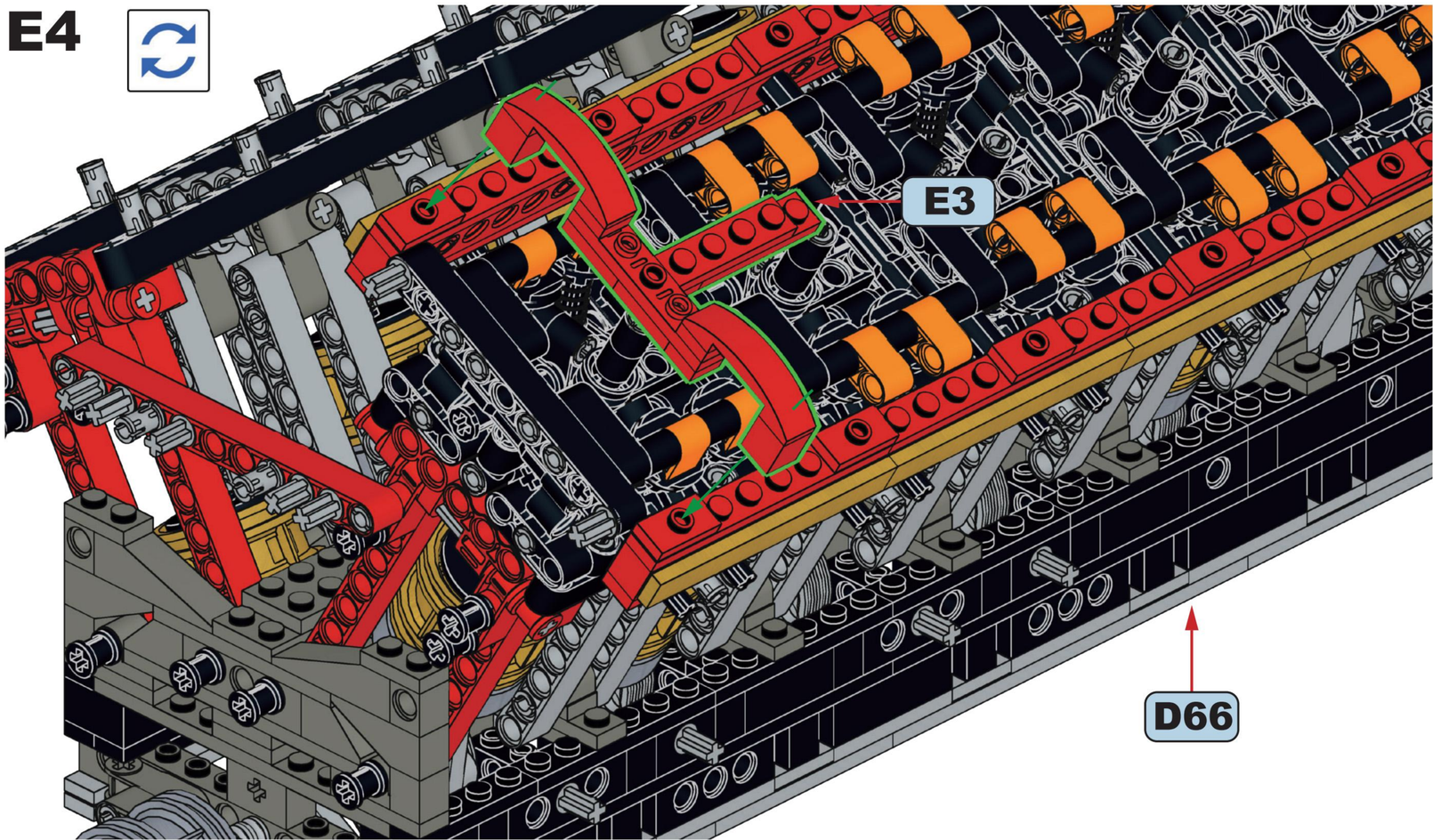

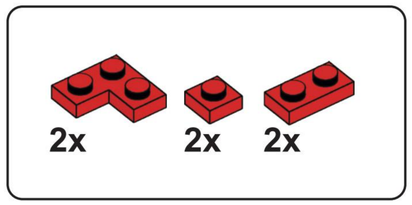

E5

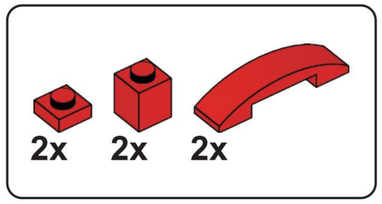

E6

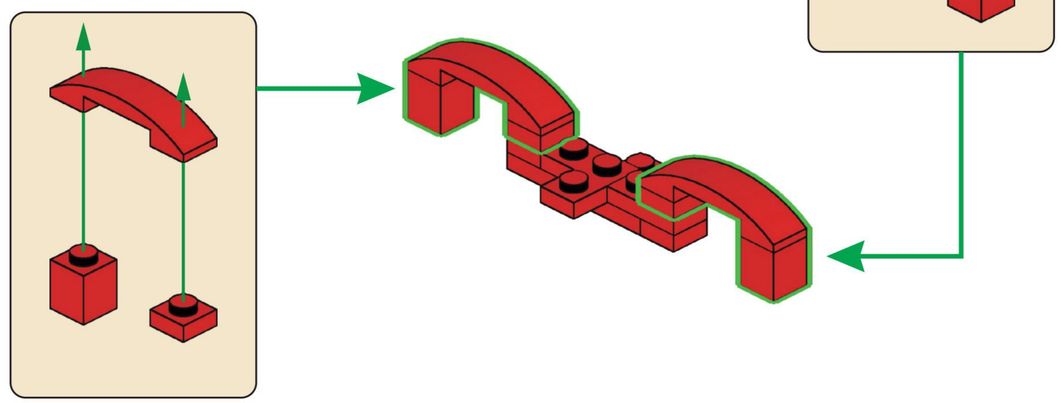

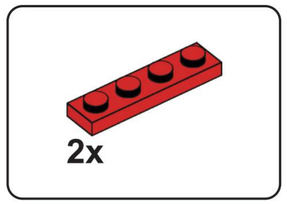

E7

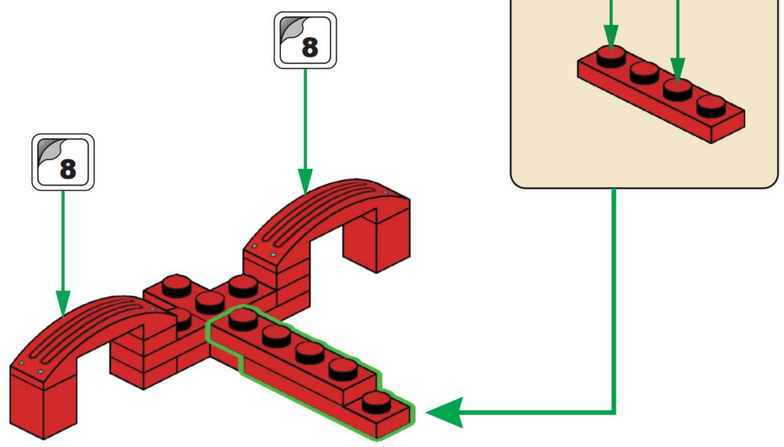

E8

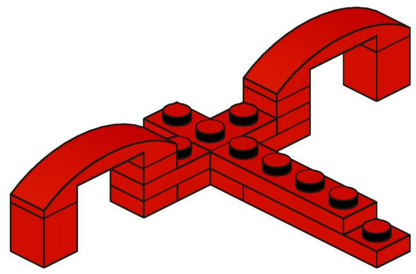

x5

E9

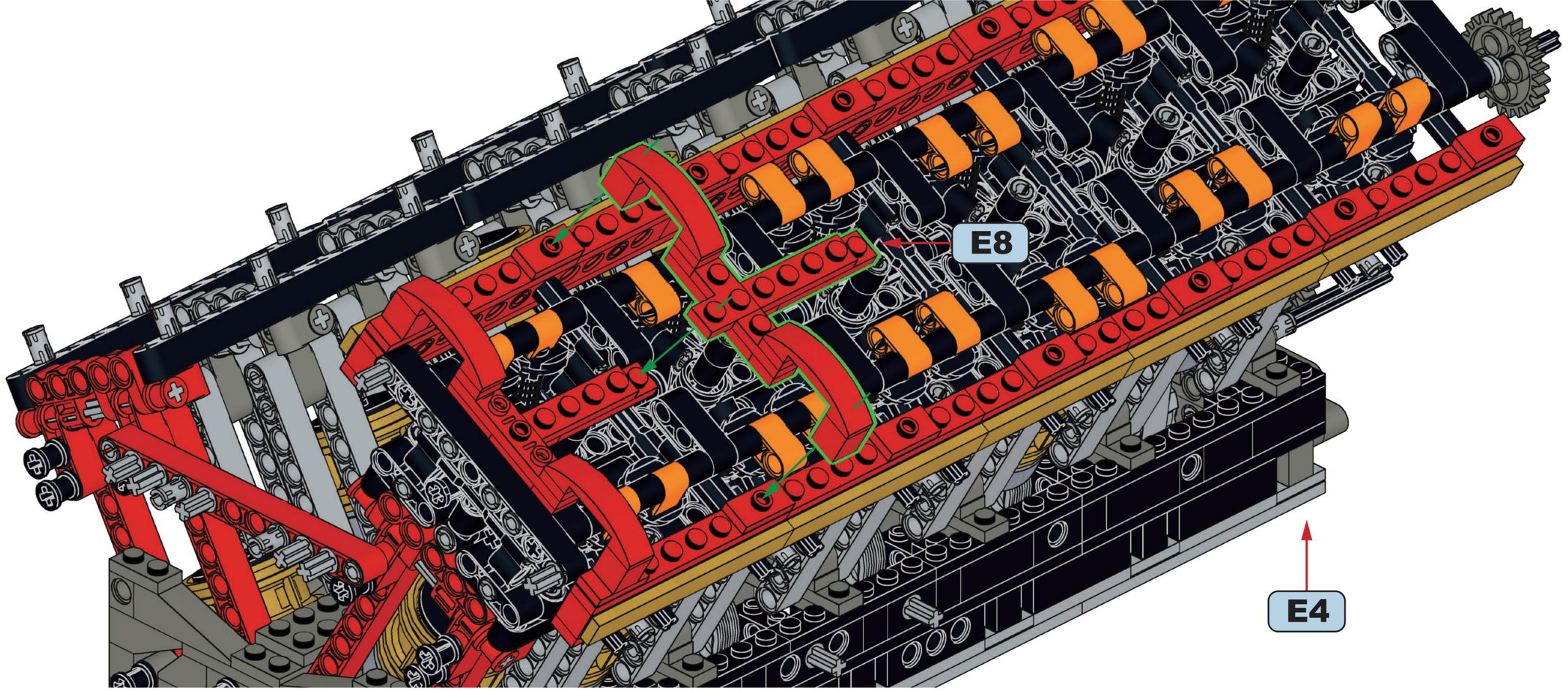

E10

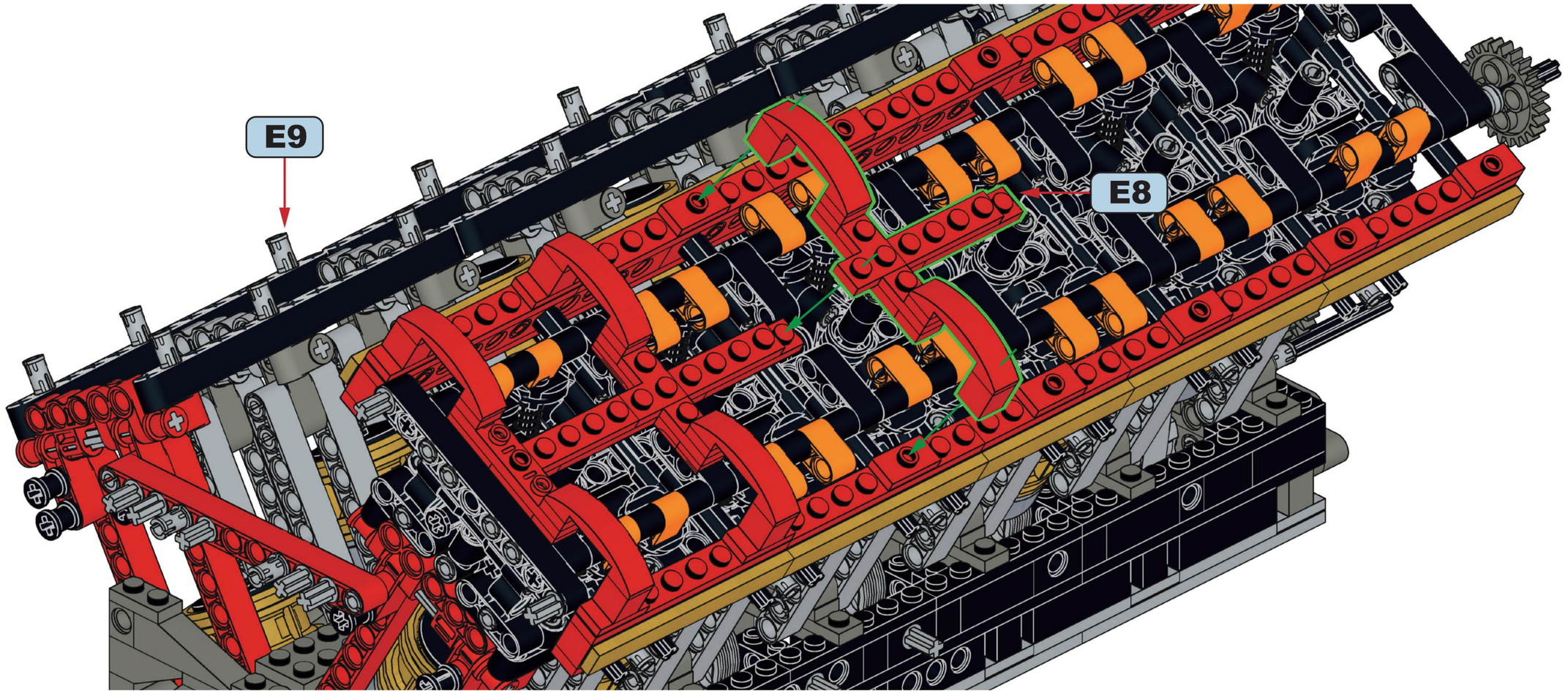

E11

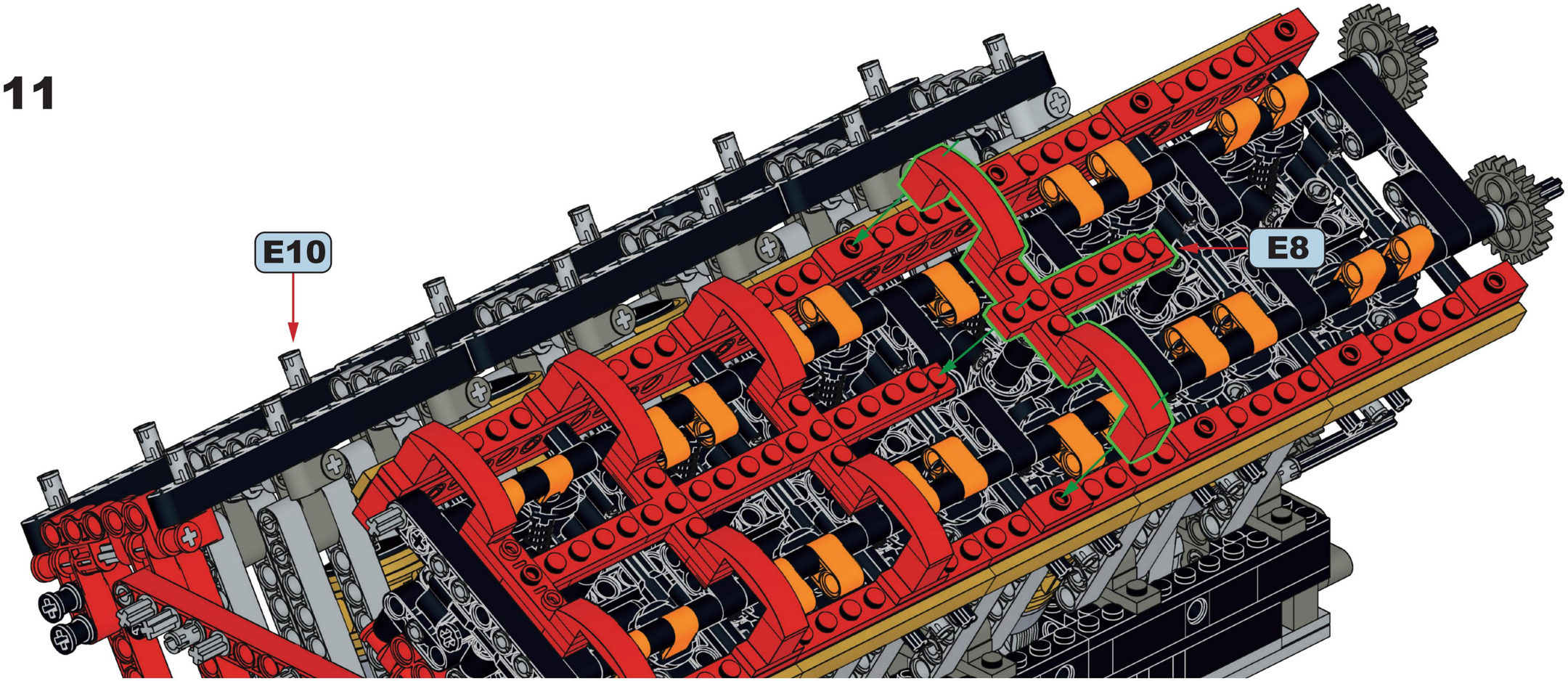

E12

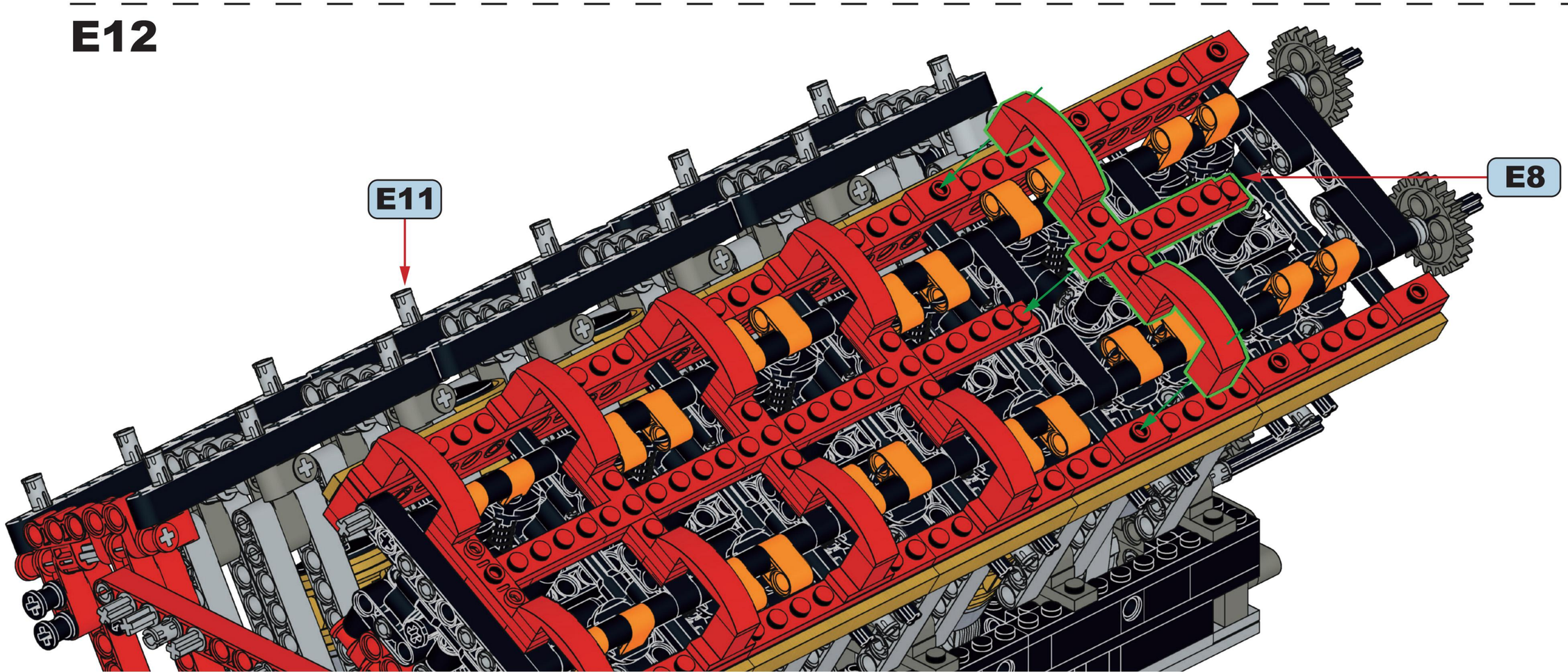

E13

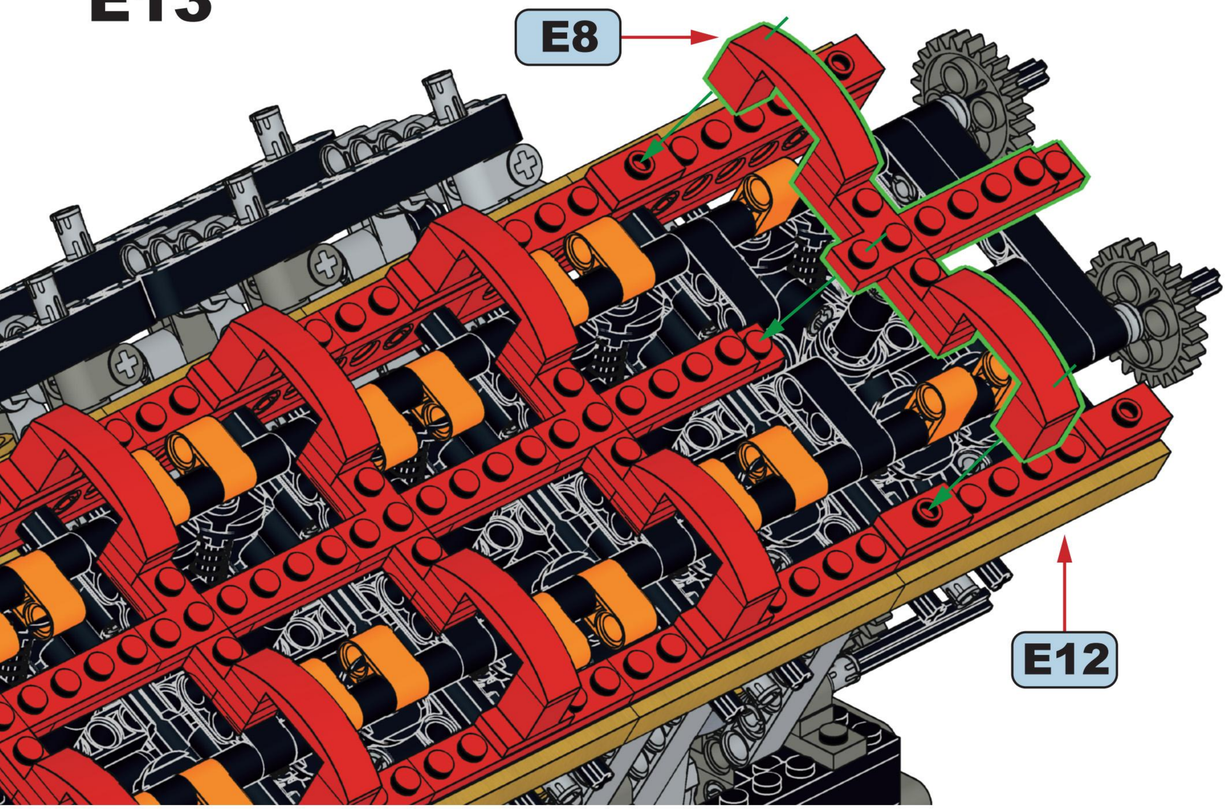

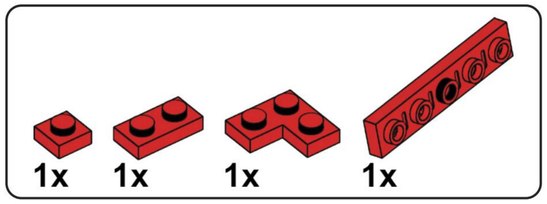

E14

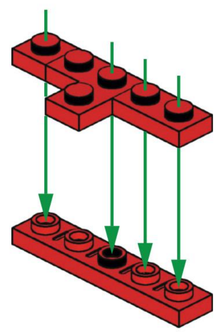

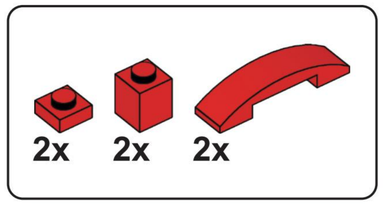

E15

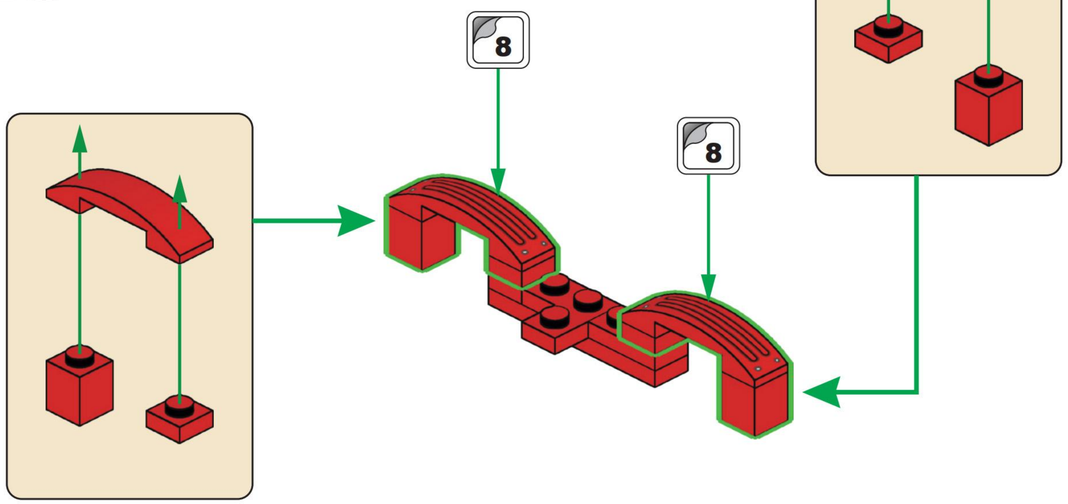

E16

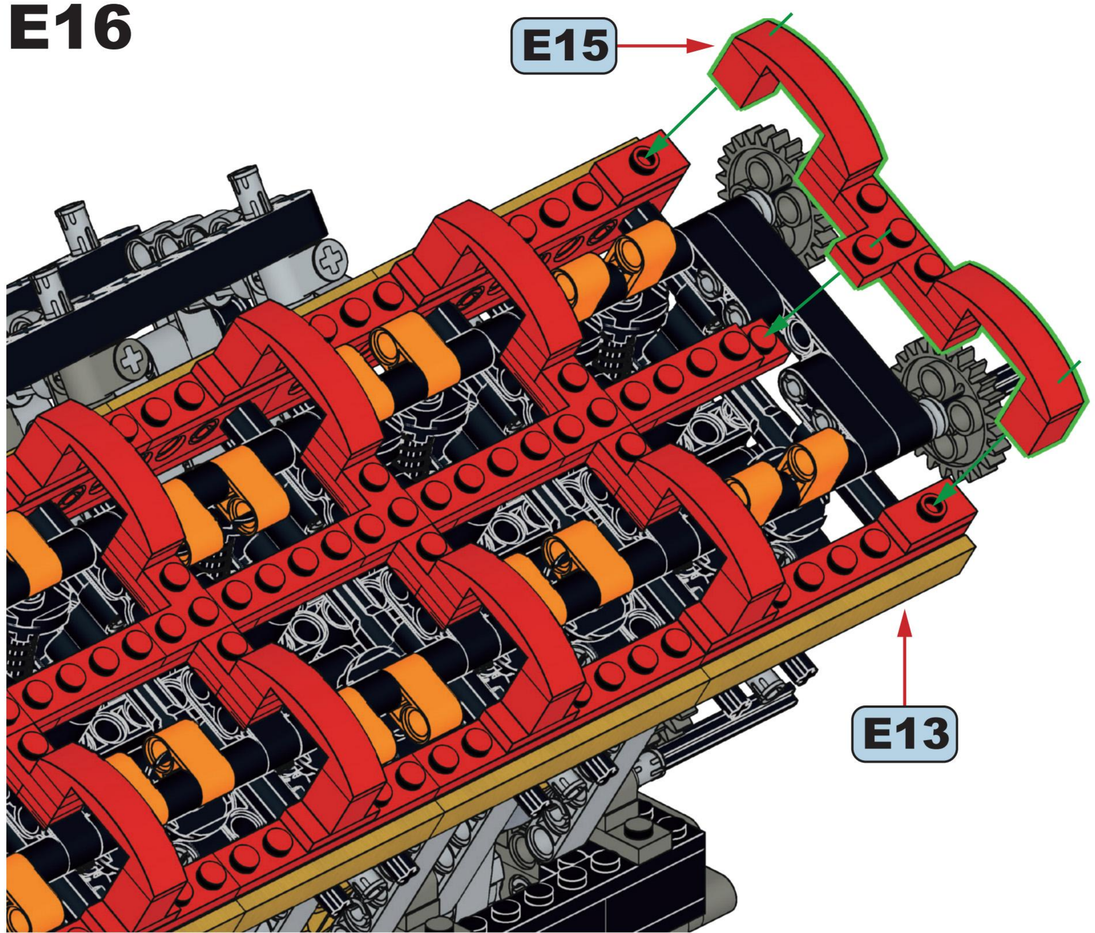

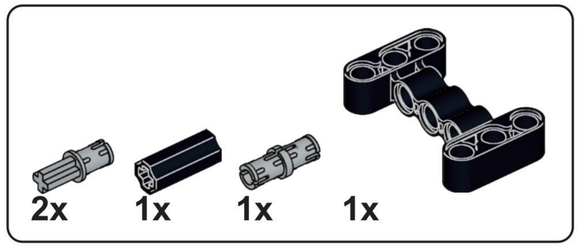

E17

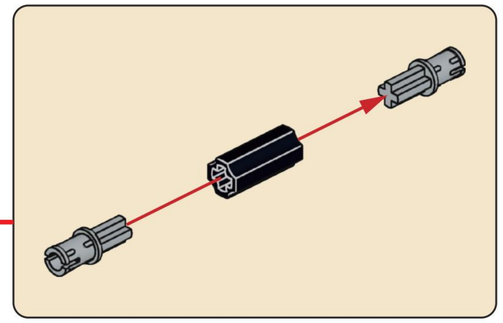

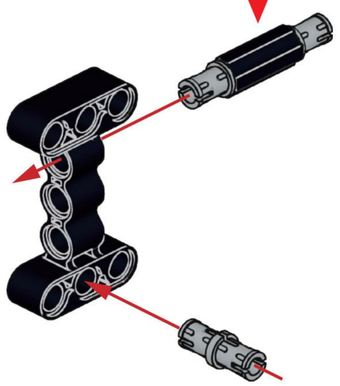

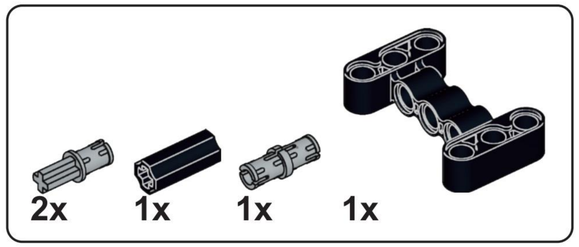

E18

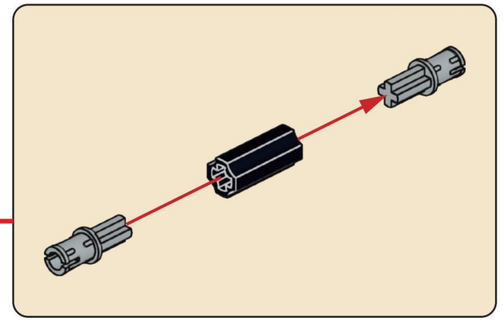

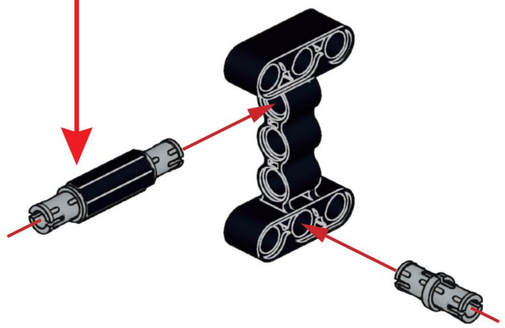

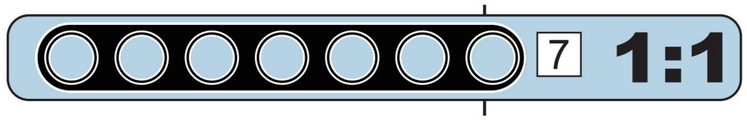

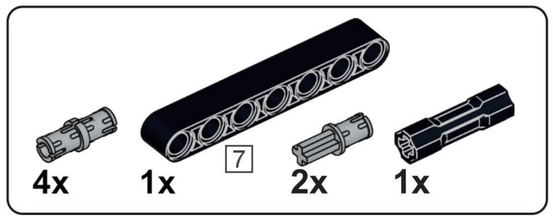

E19

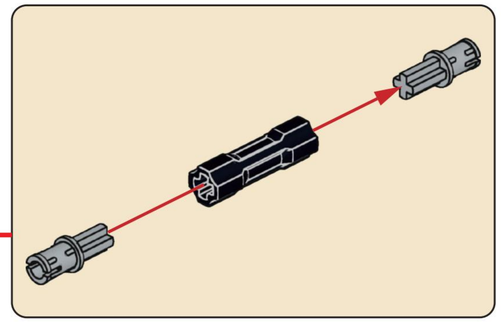

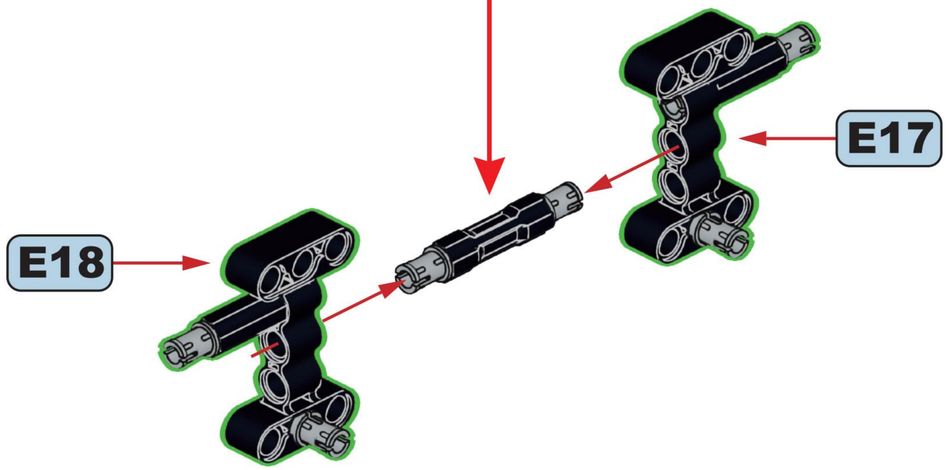

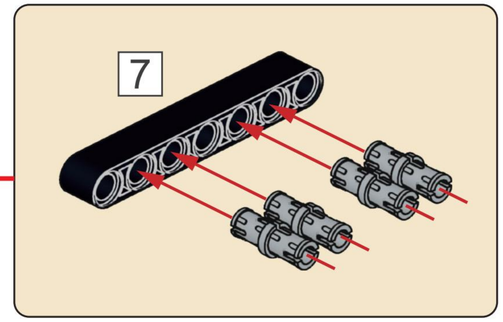

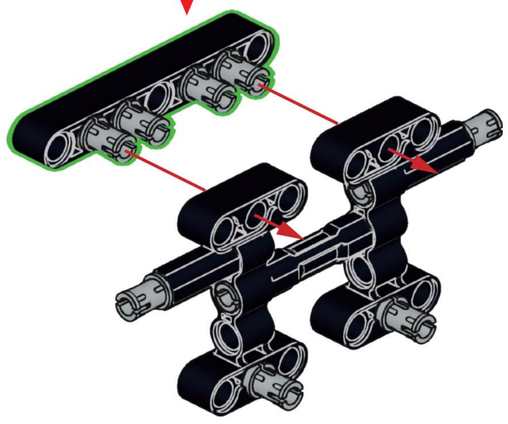

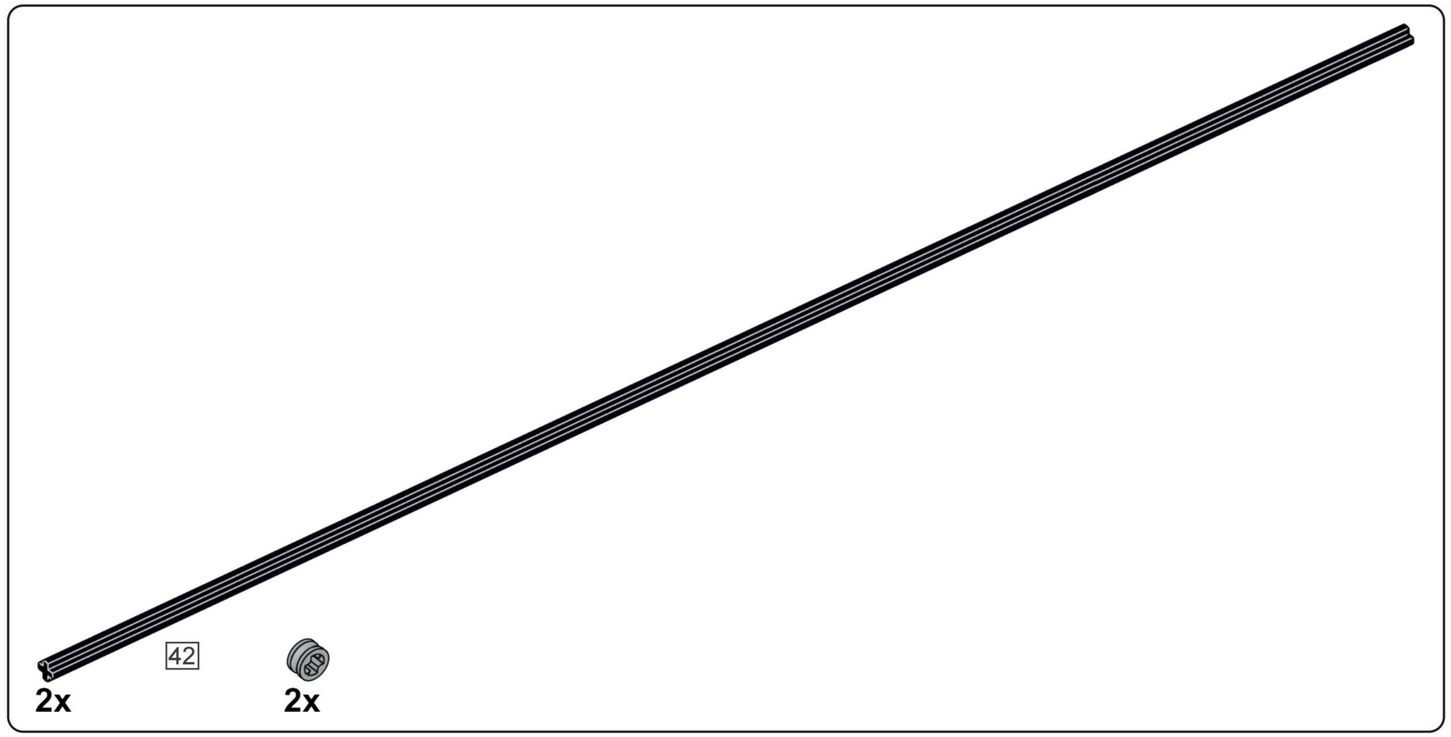

E20

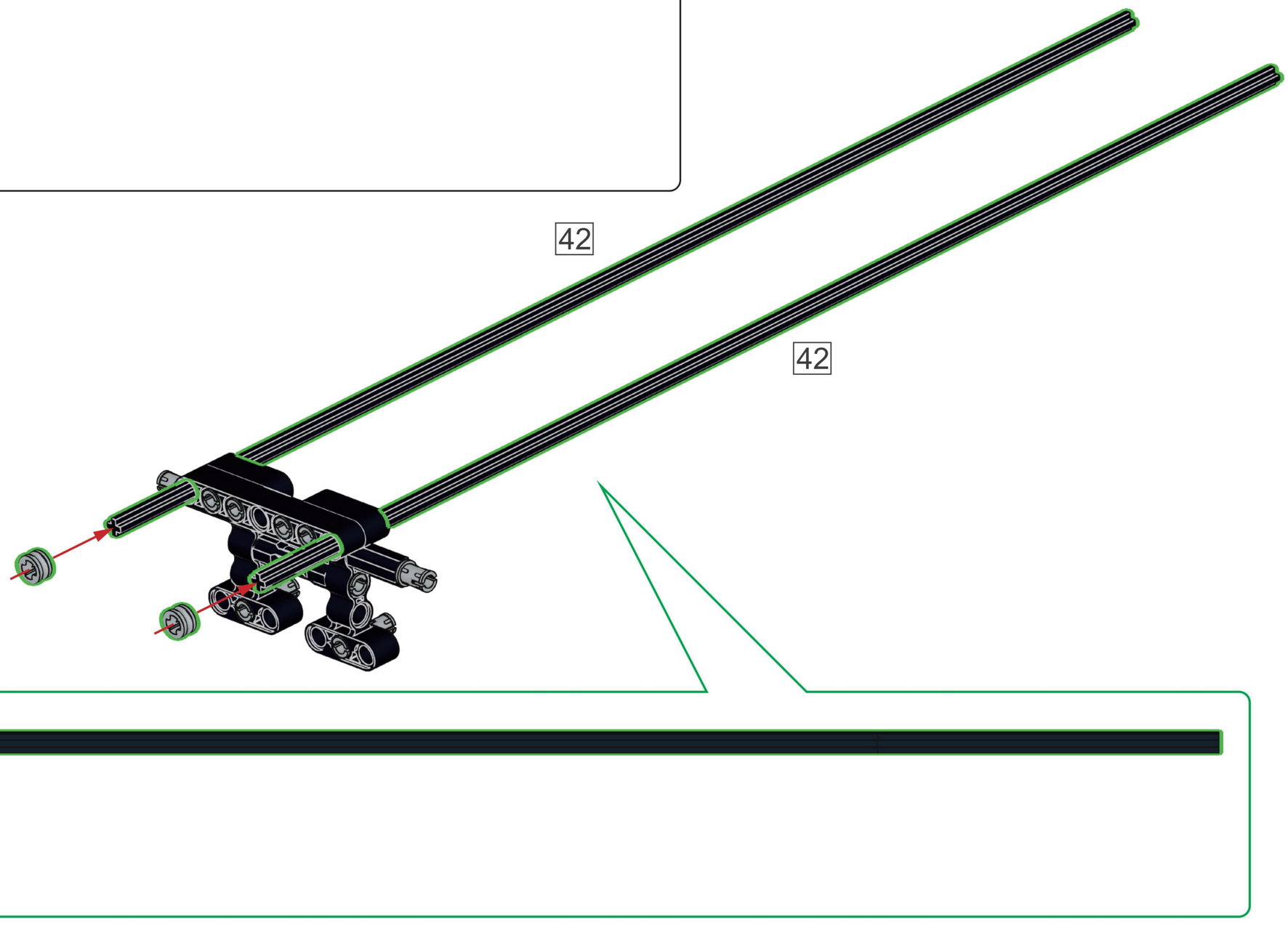

2x

E21

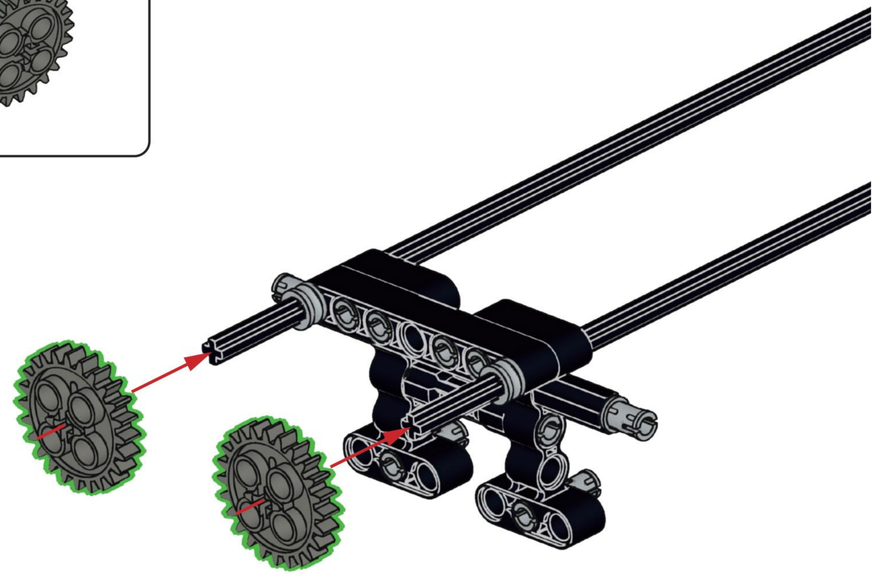

3x 12x

E22

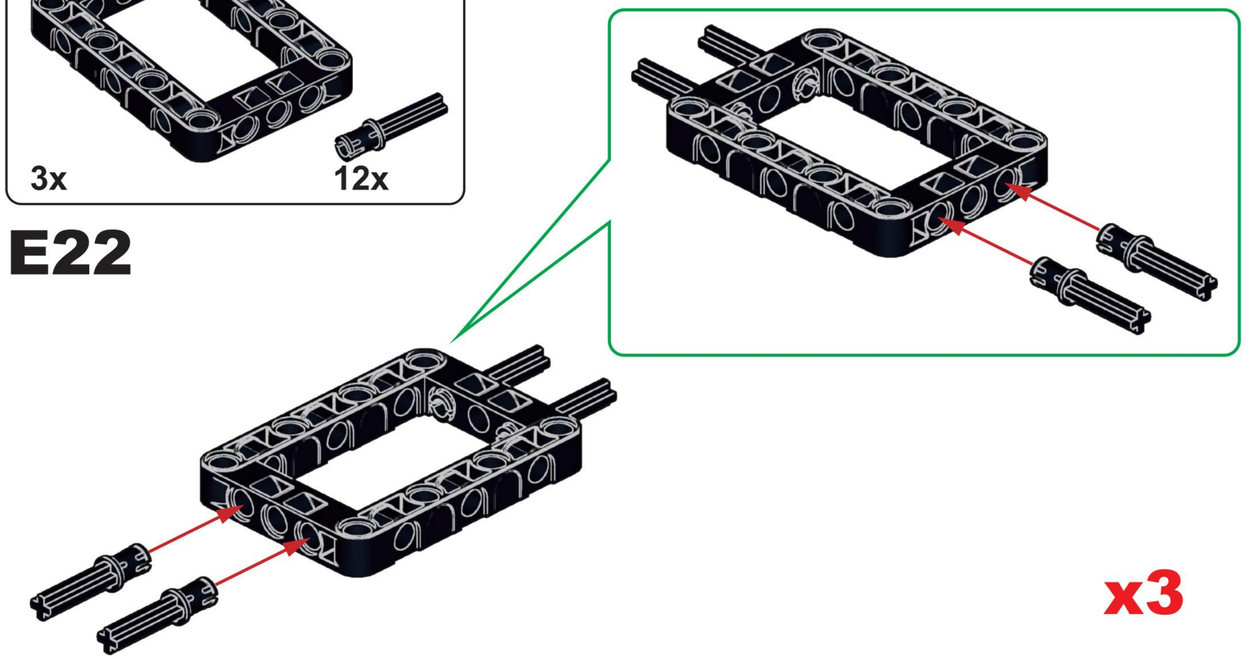

x3

9x 9x

E23

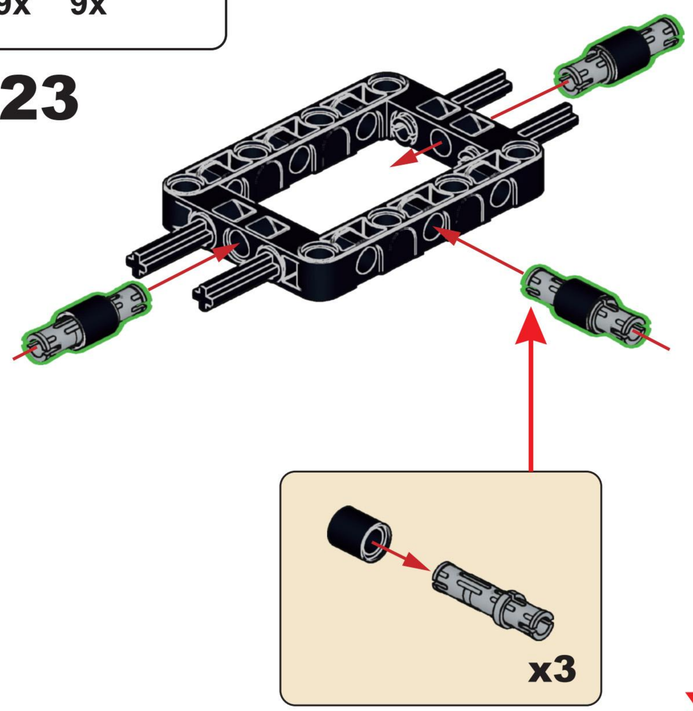

x3

x3

1x 1x 6

E24

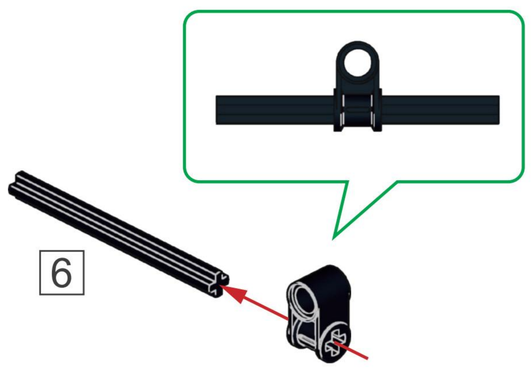

6 1:1

2x

E25

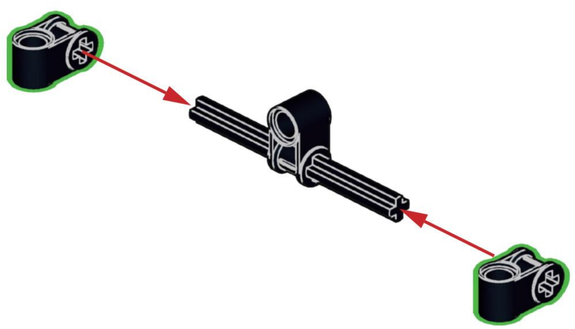

1x 2x

E26

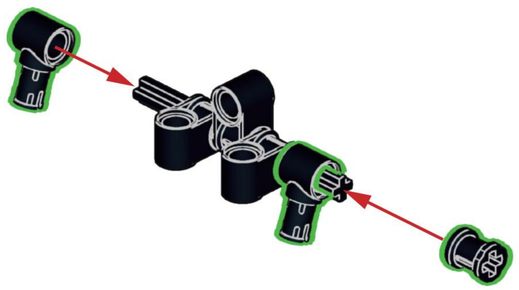

1x 1x 6

E27

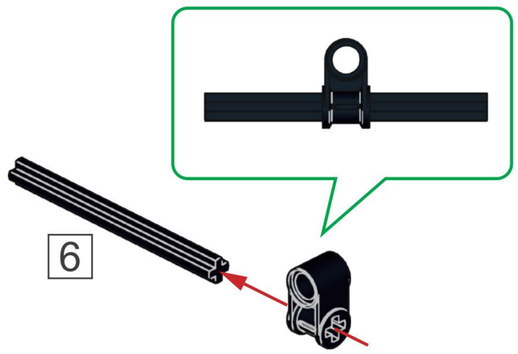



2x

E28

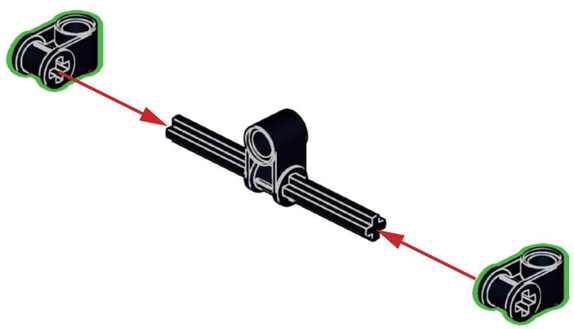

2x 2x

E29

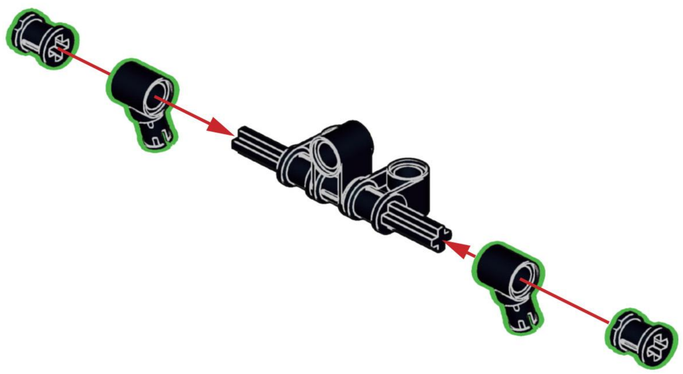

E30

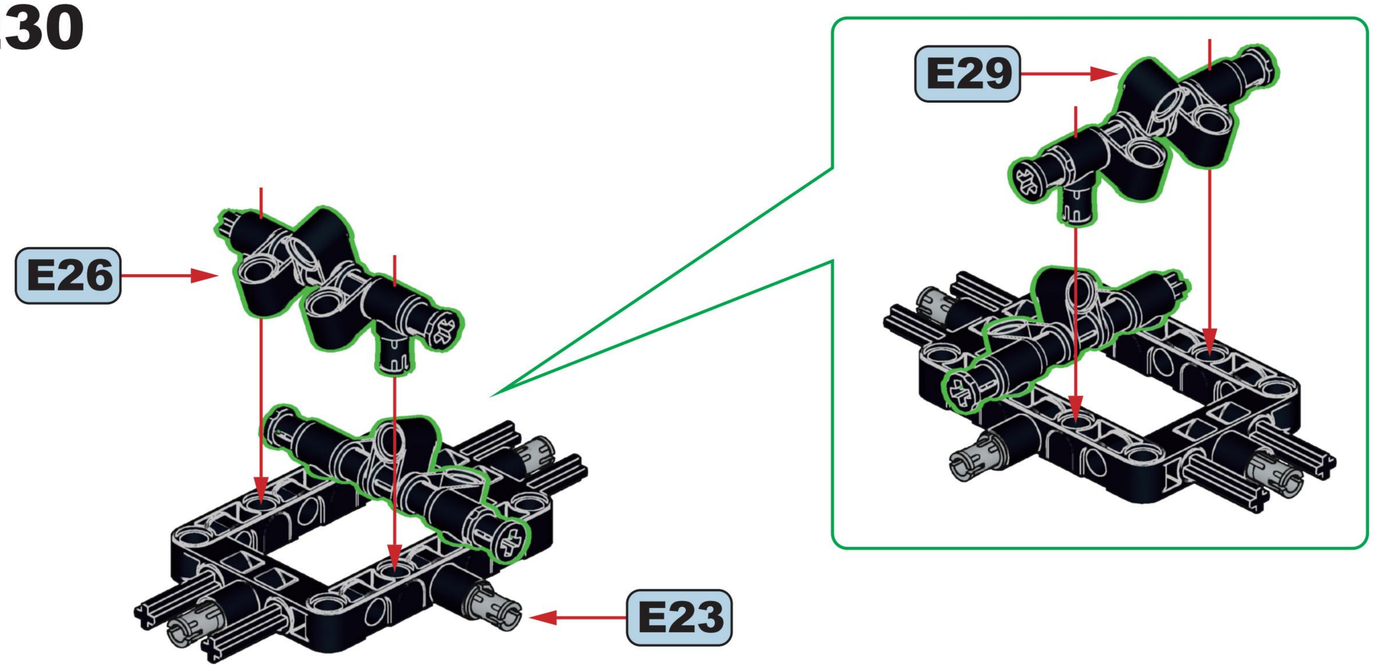

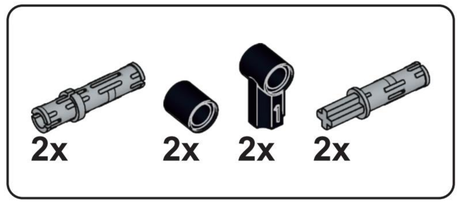

E31

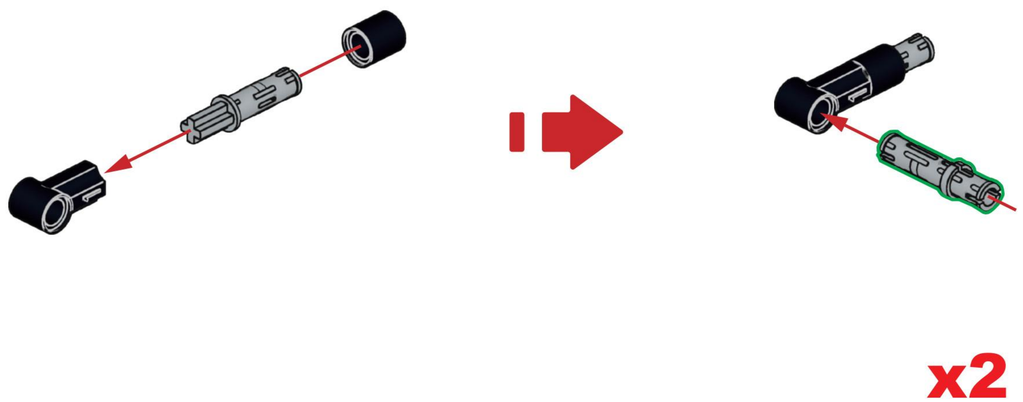

x2

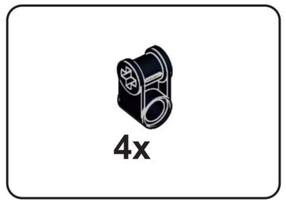

E32

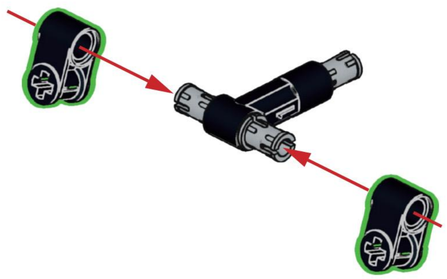

x2

E33

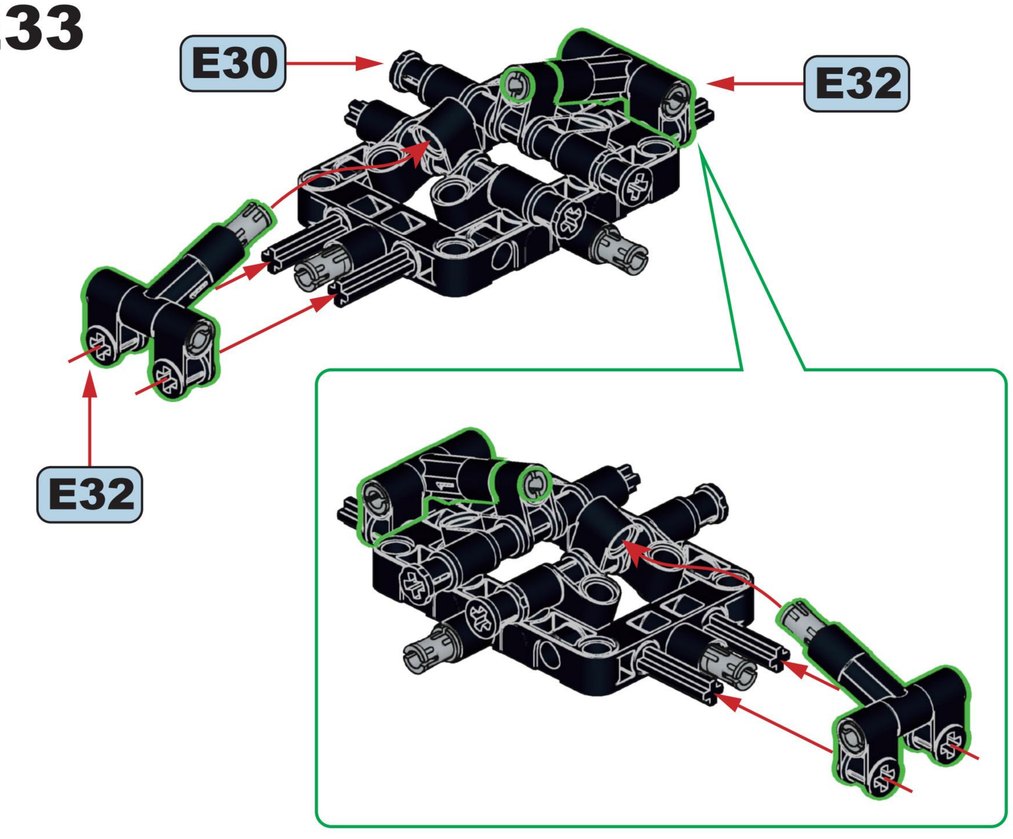

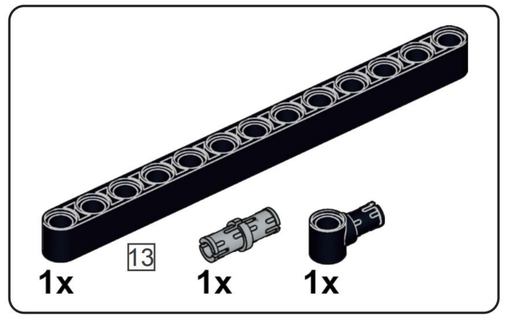

E34

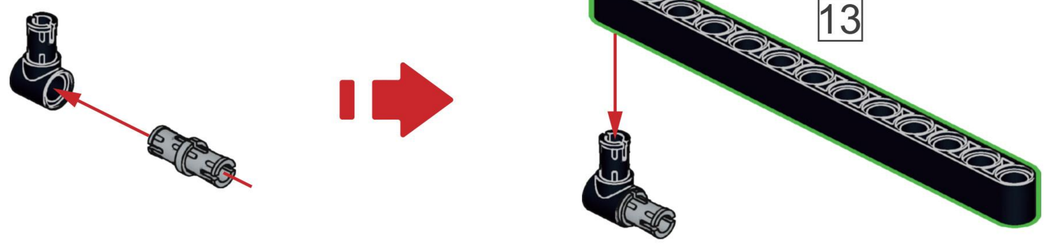

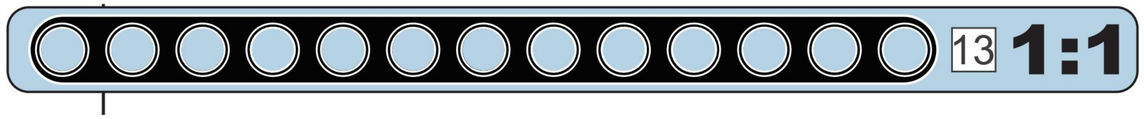

E35

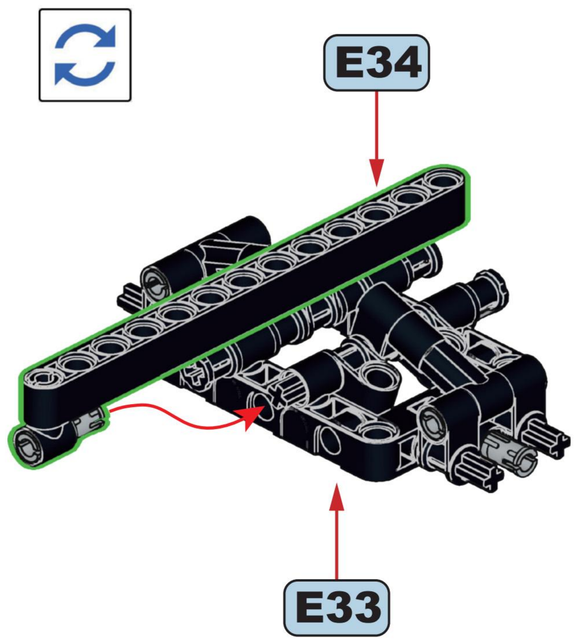

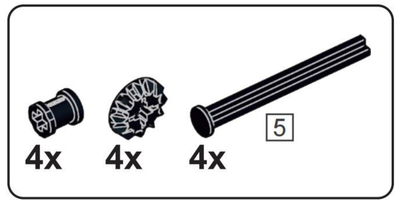

E36

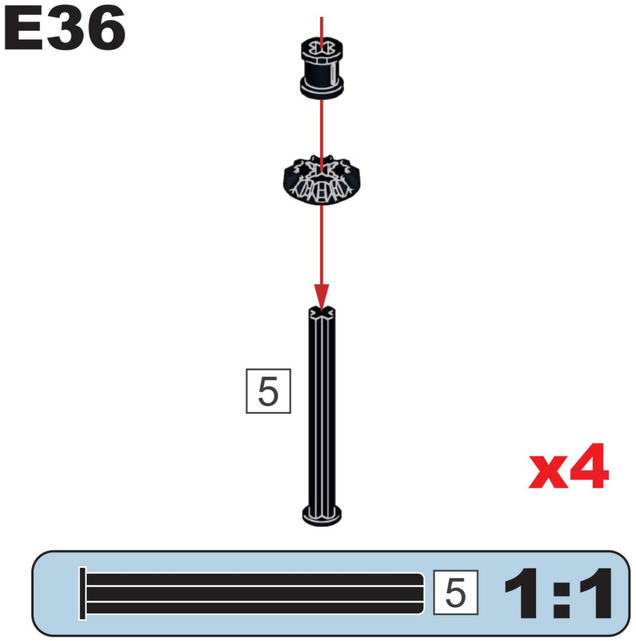

E37

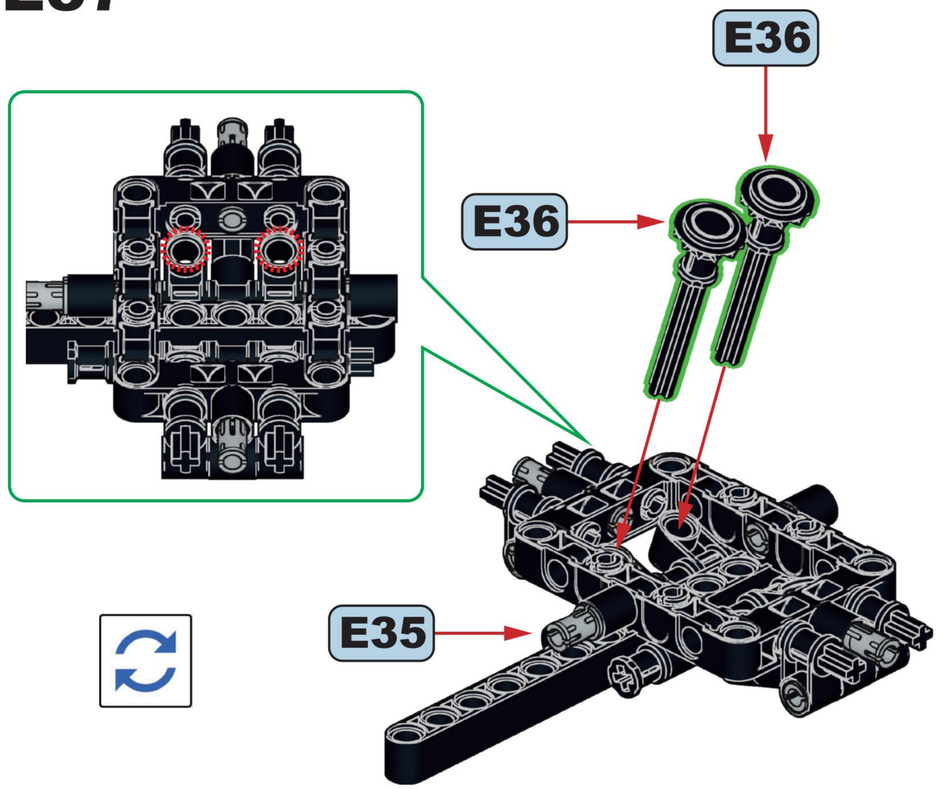

E38

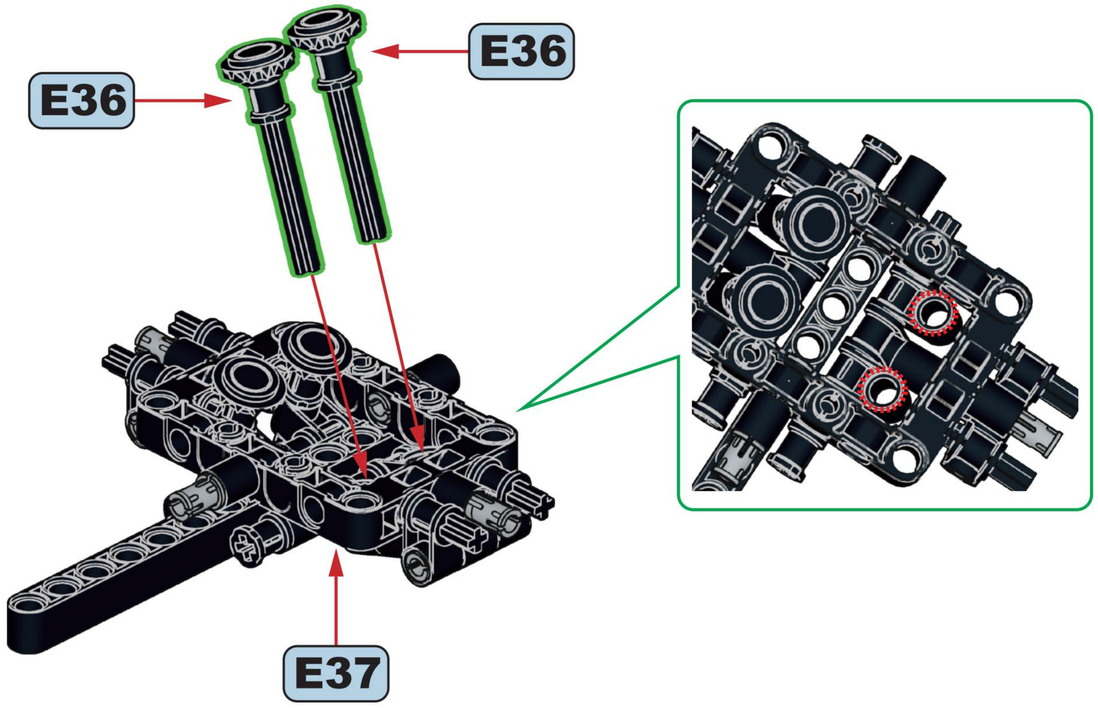

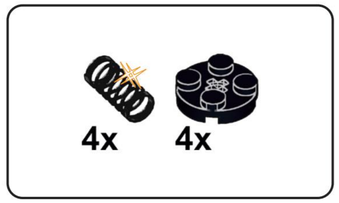

E39

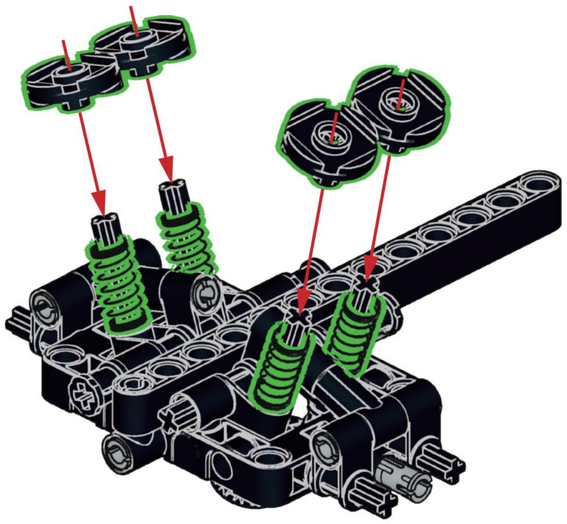

E40

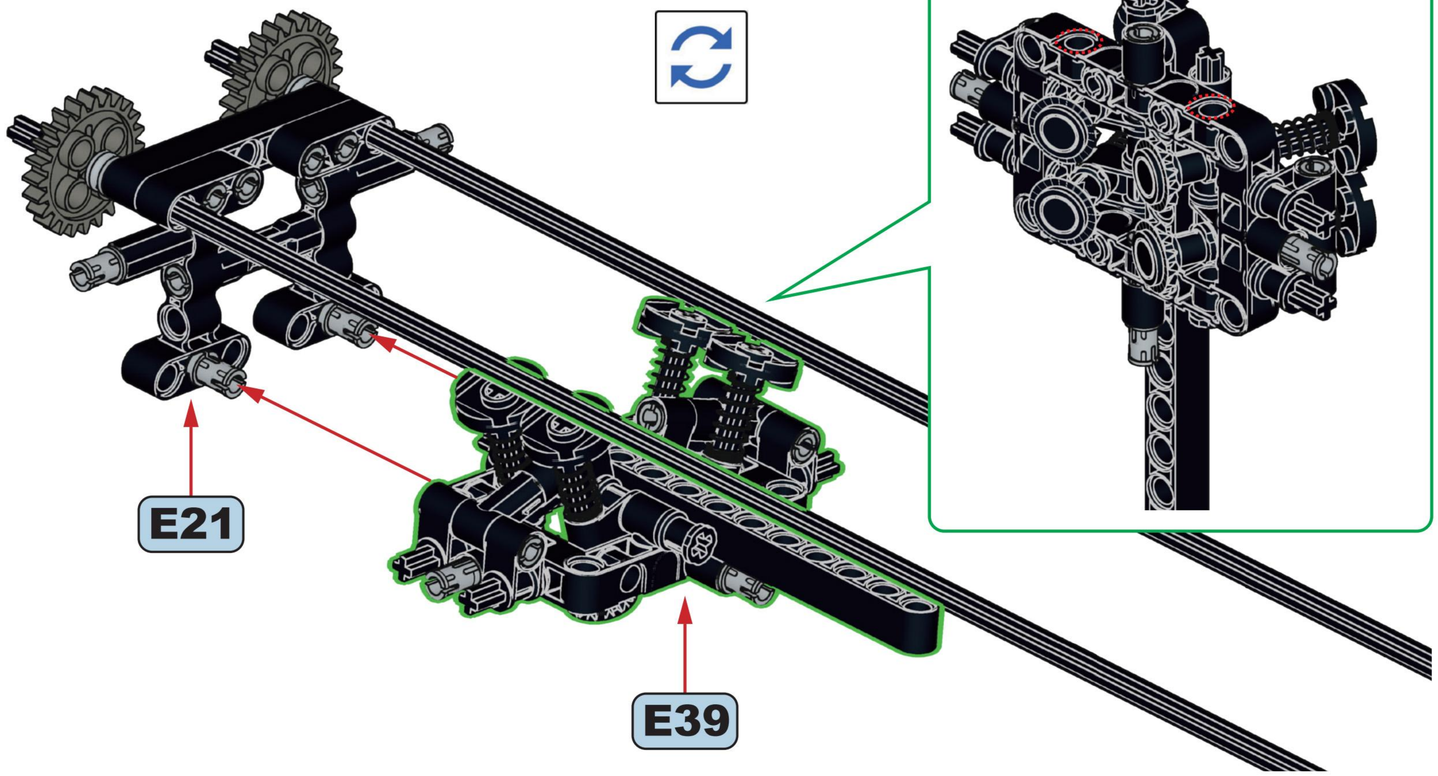

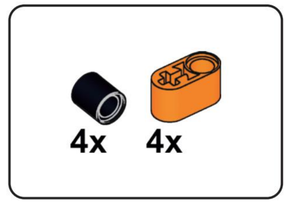

E41

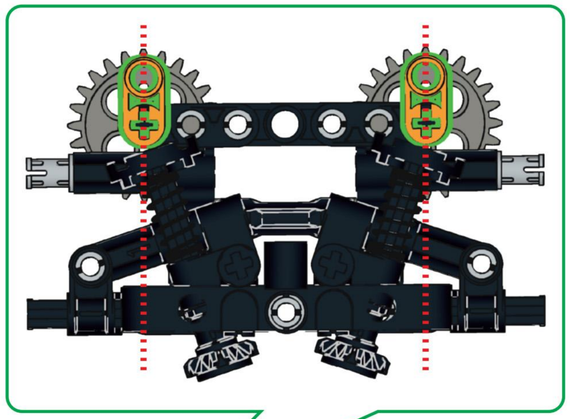

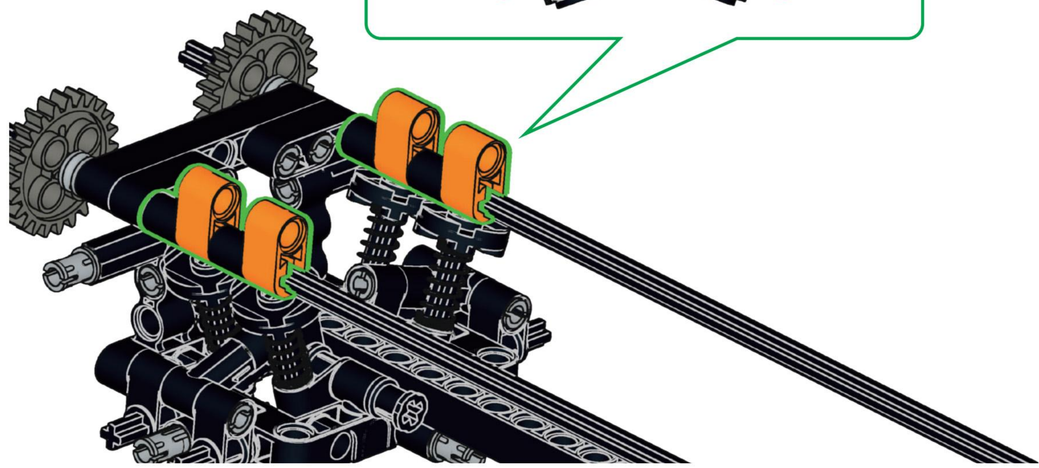

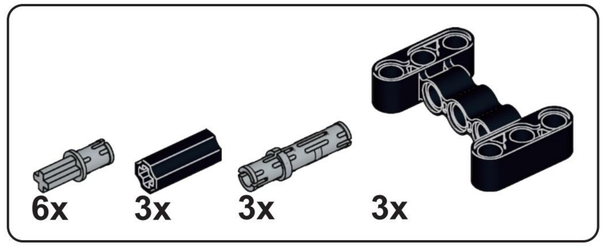

E42

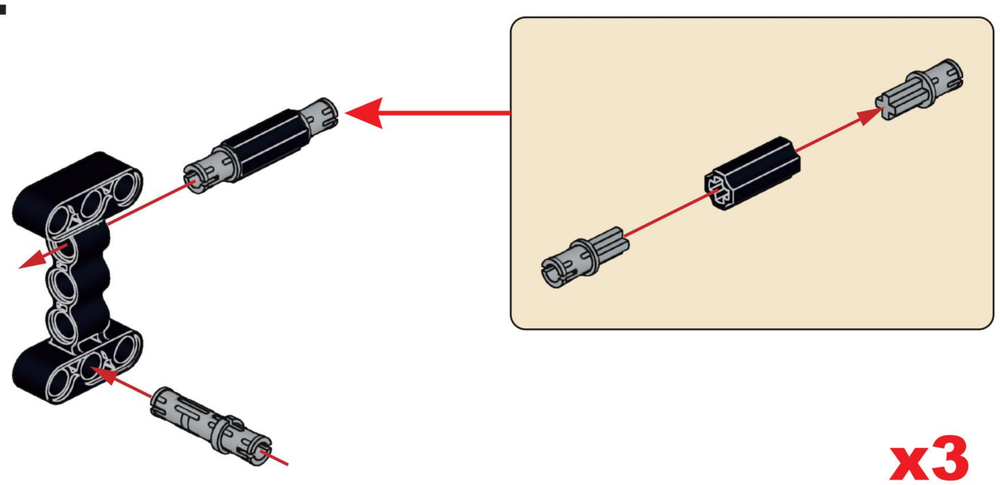

x3

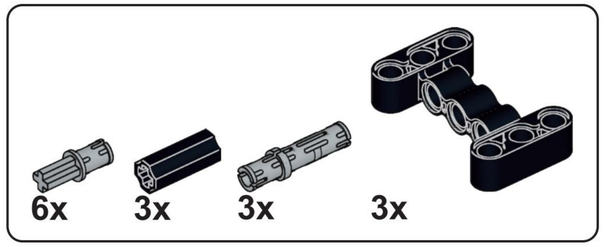

E43

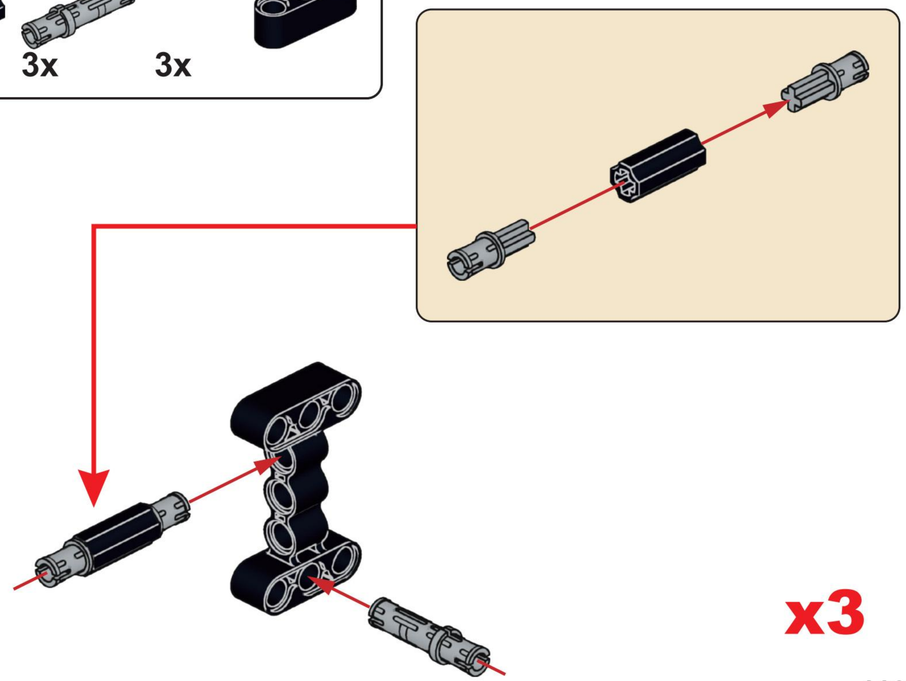

x3

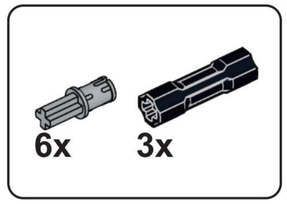

E44

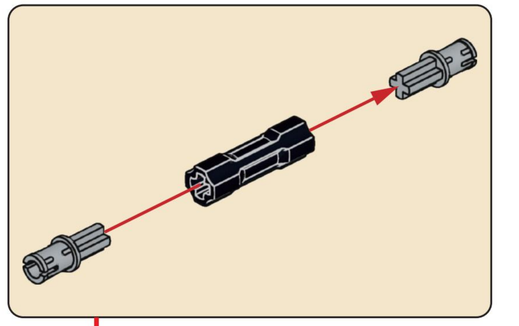

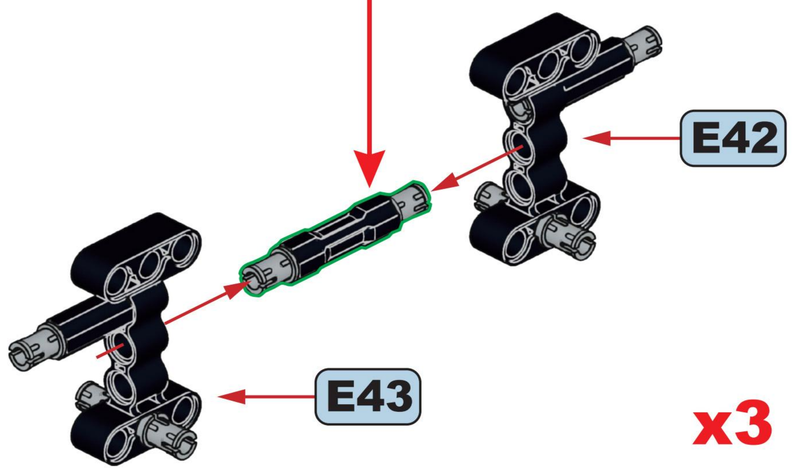

x3

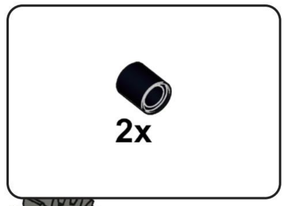

E45

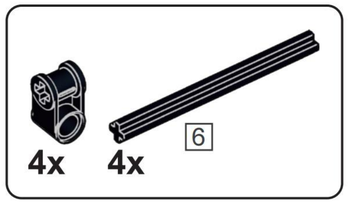

E46

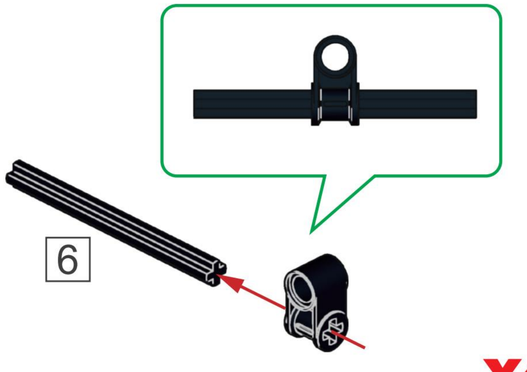

x4



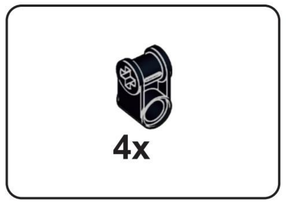

E47

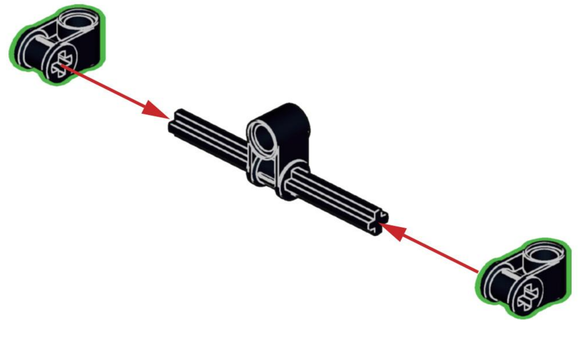

x2

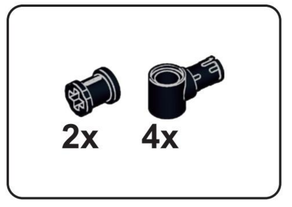

E48

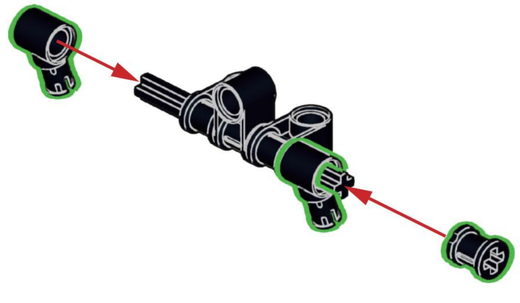

x2

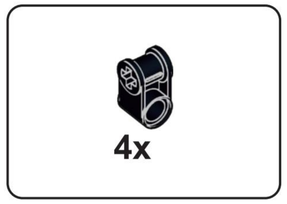

E49

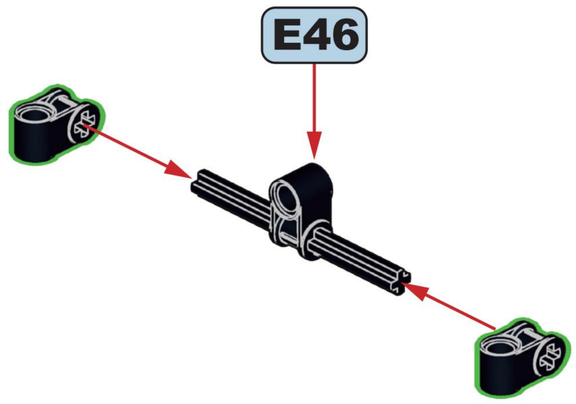

x2

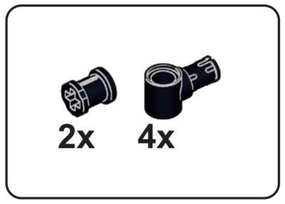

E50

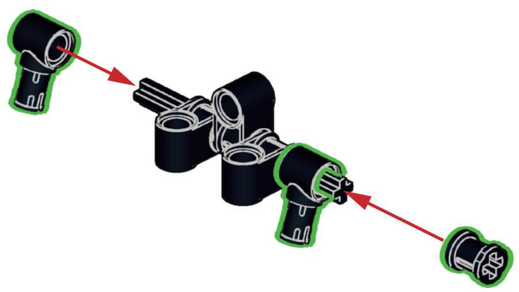

x2

E51

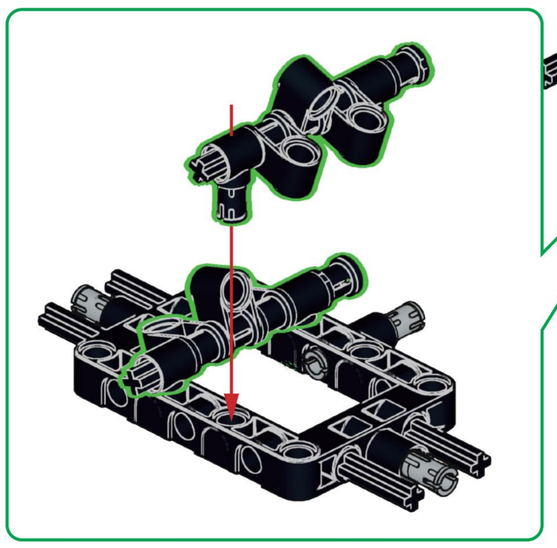

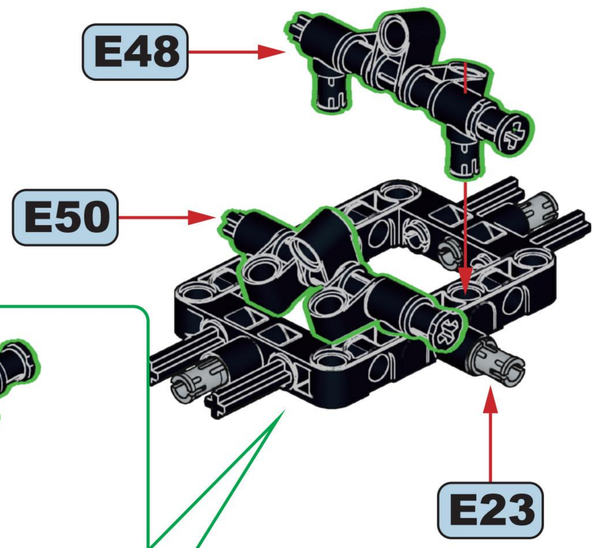

x2

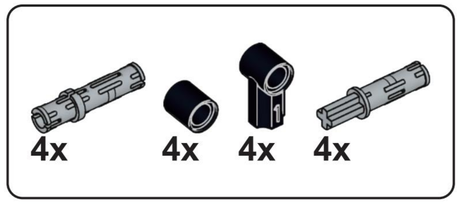

E52

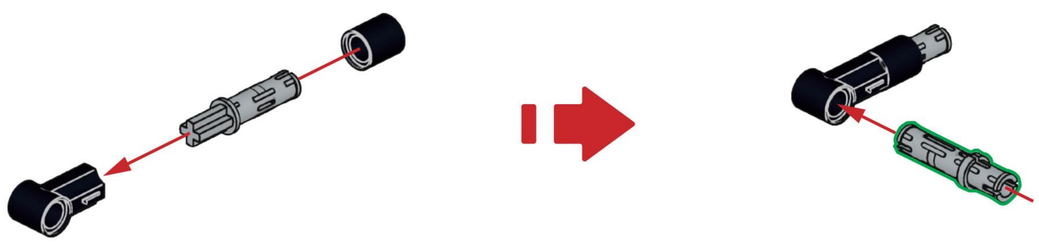

x4

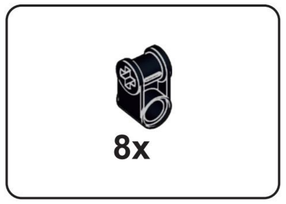

E53

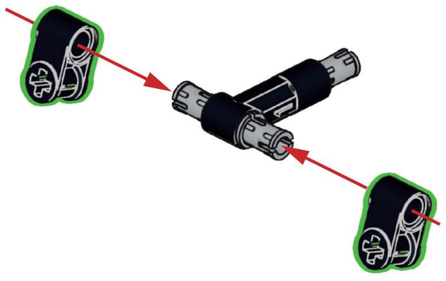

x4

E54

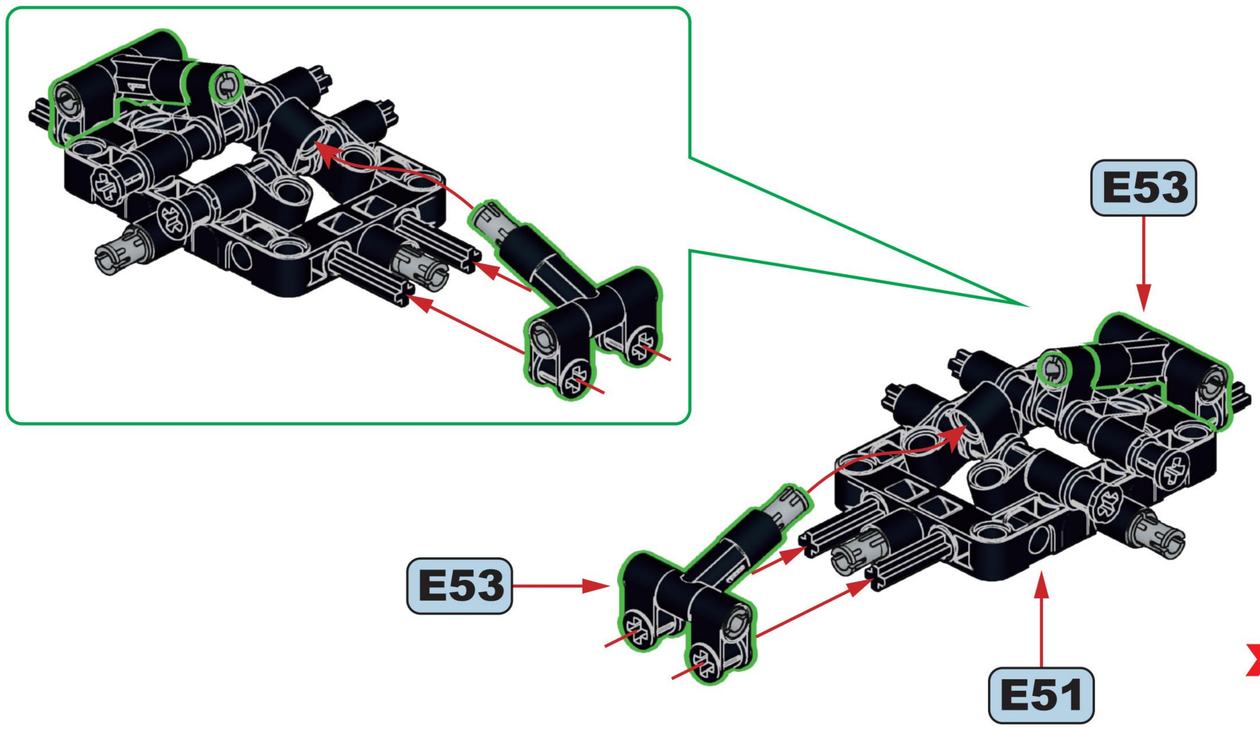

x2

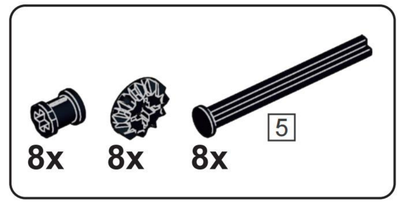

E55

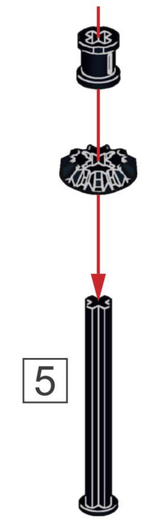



x8

E56

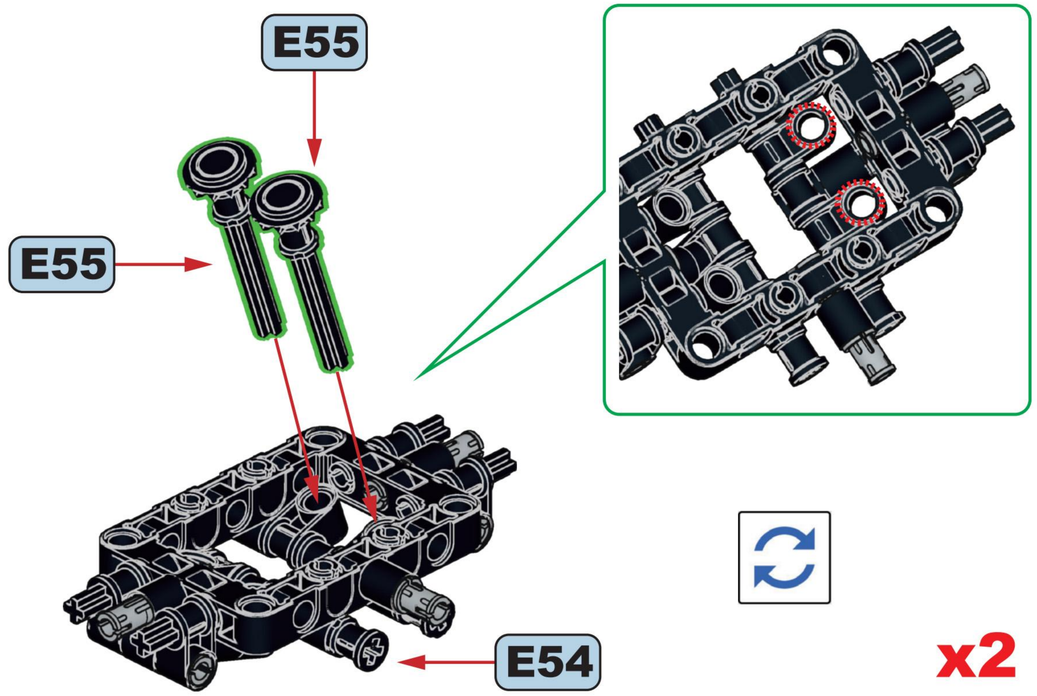

x2

E57

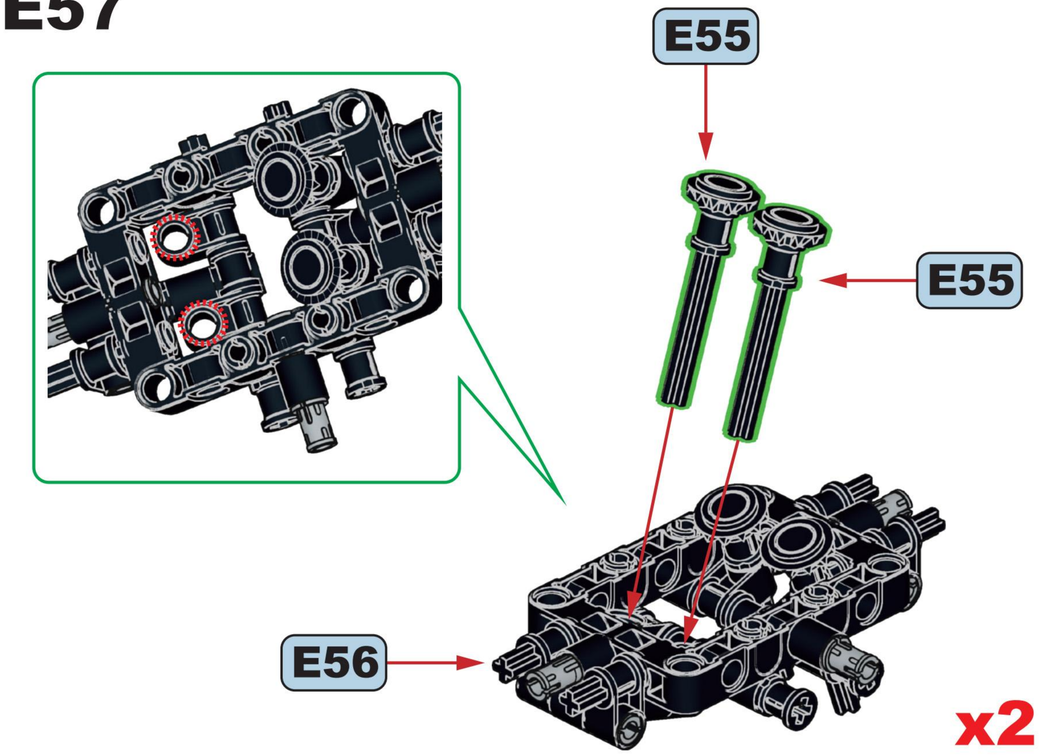

x2

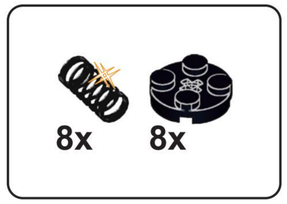

E58

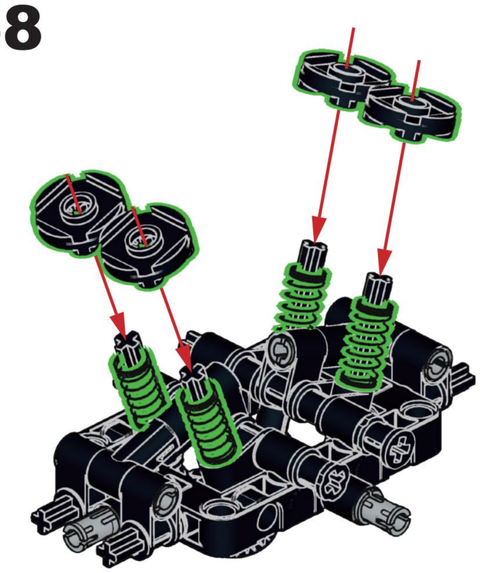

x2

E59

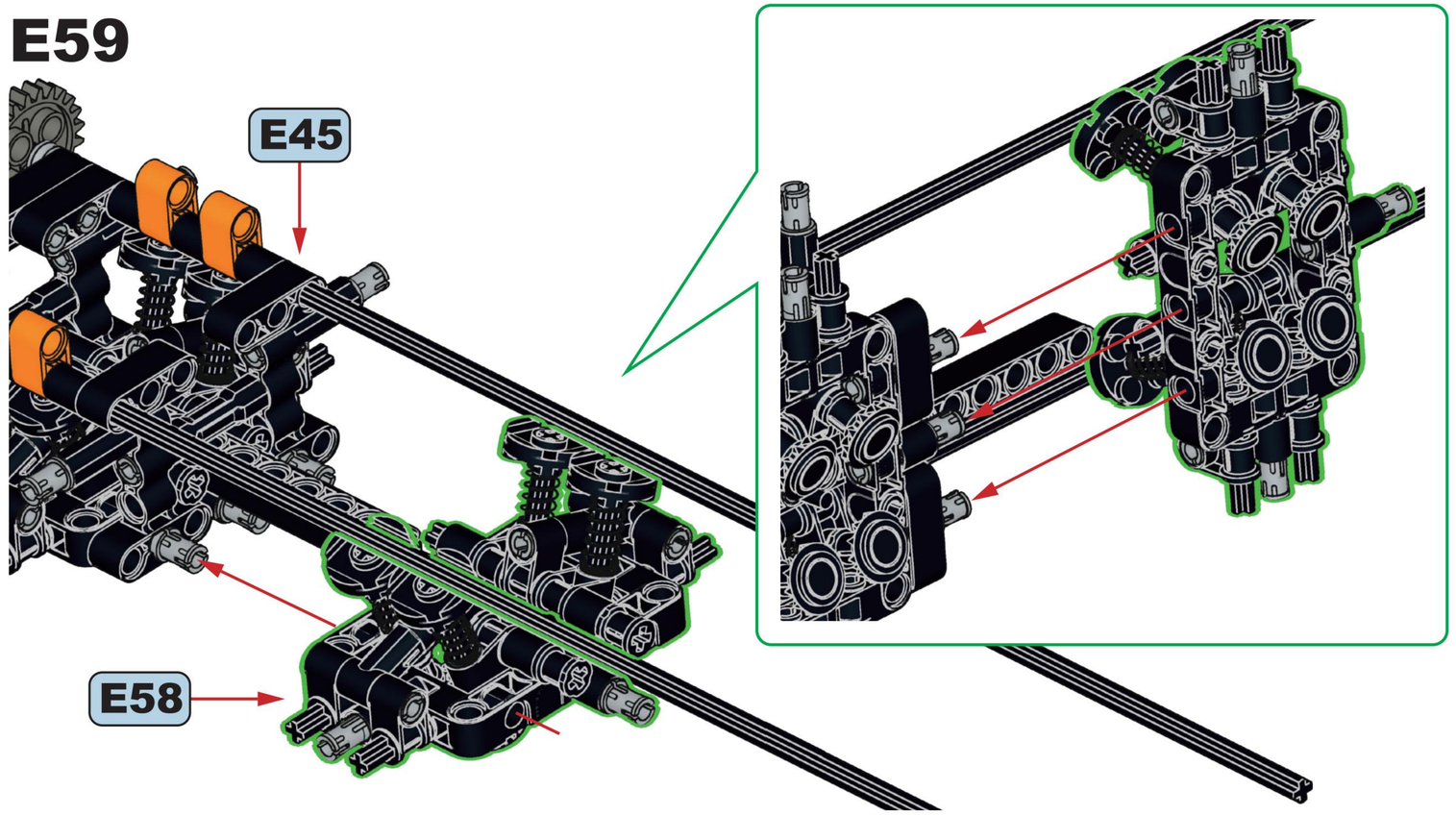

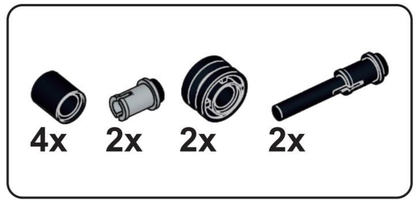

E60

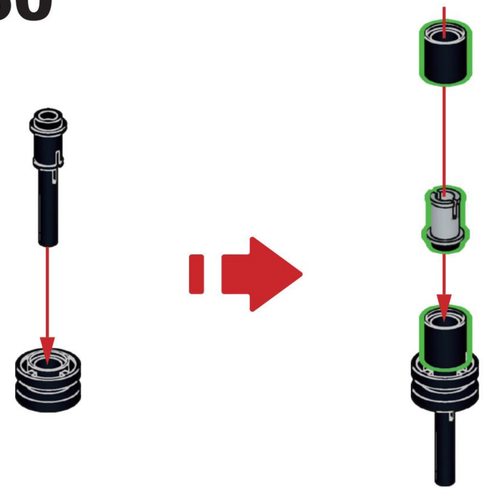

x2

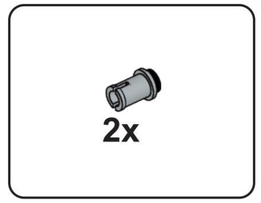

E61

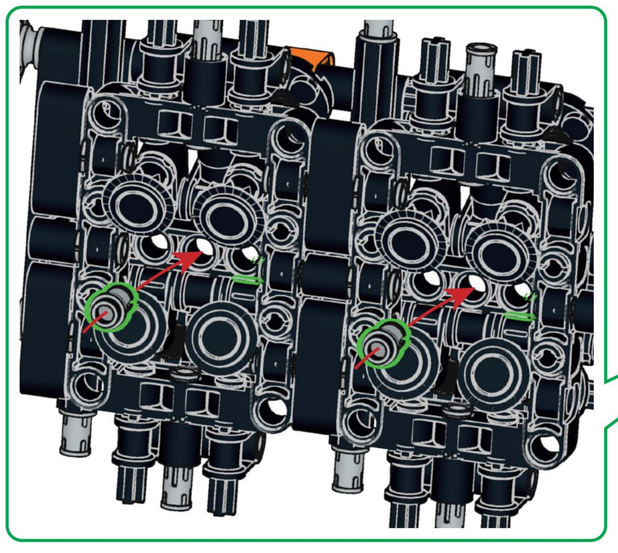

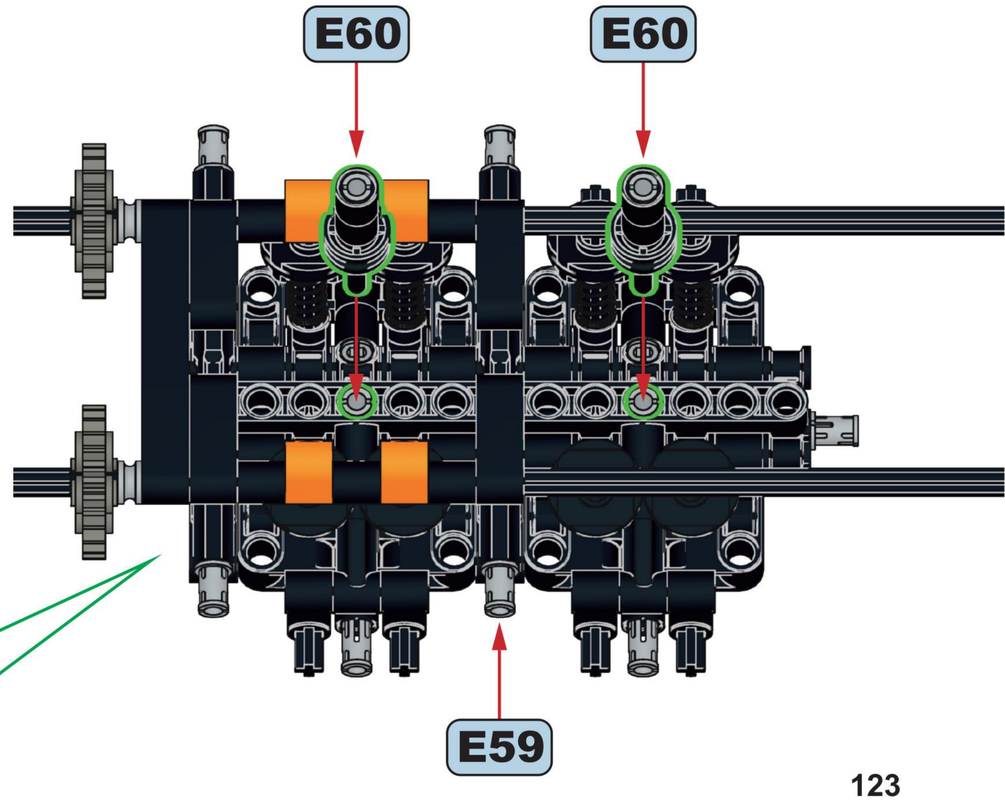

4x 4x

E62

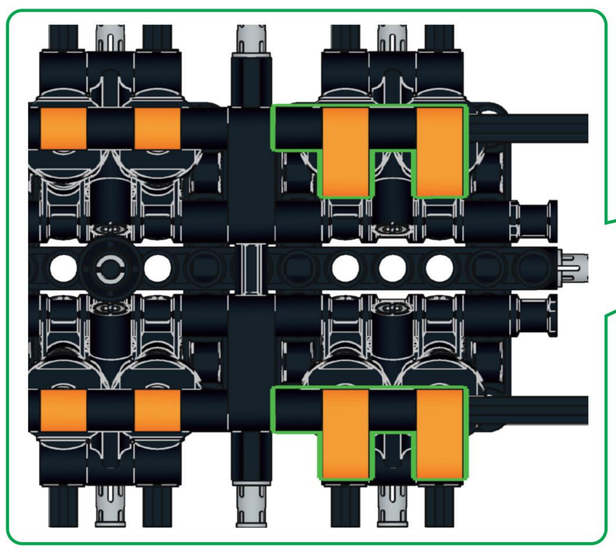

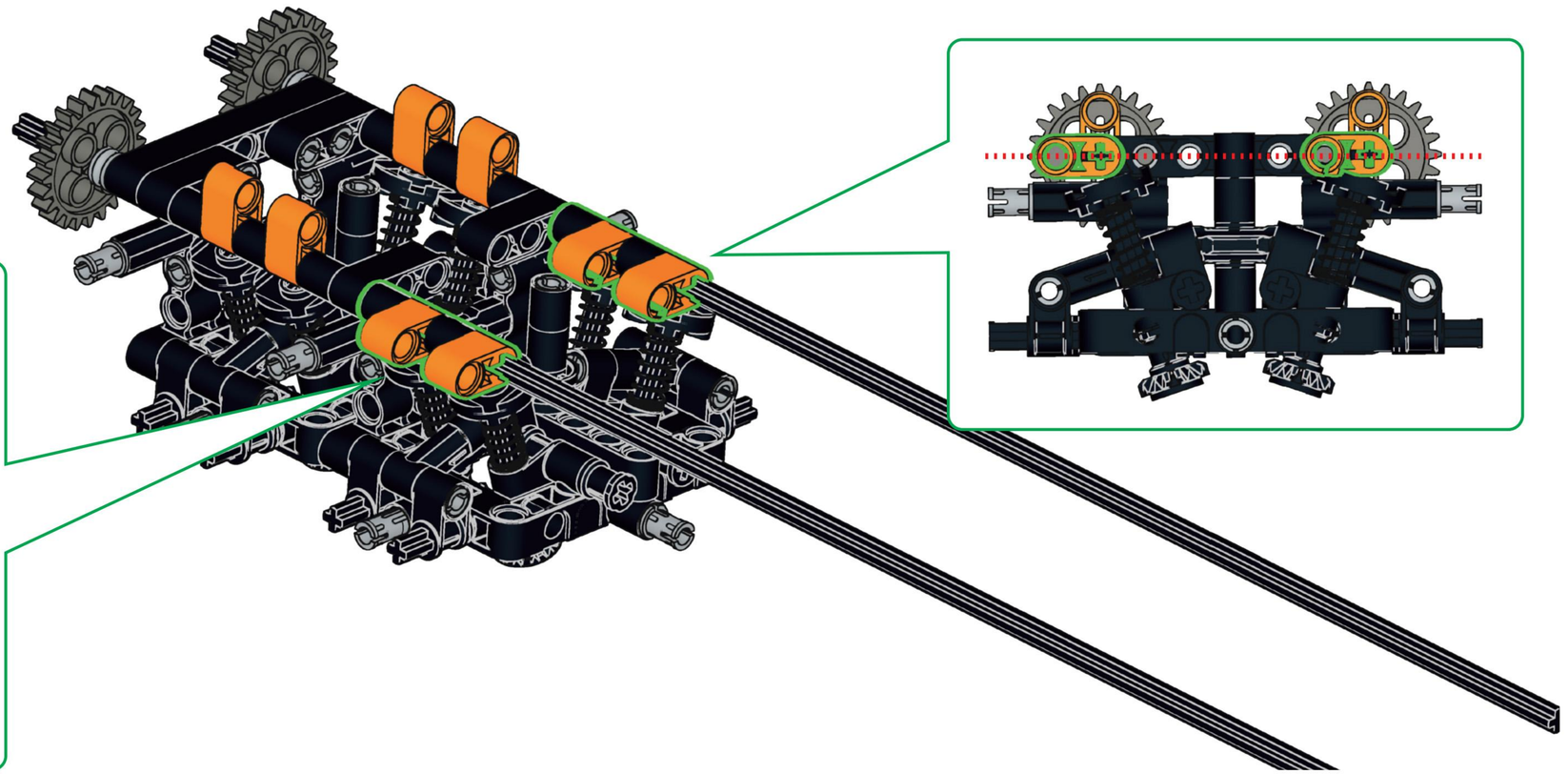

2x

E63

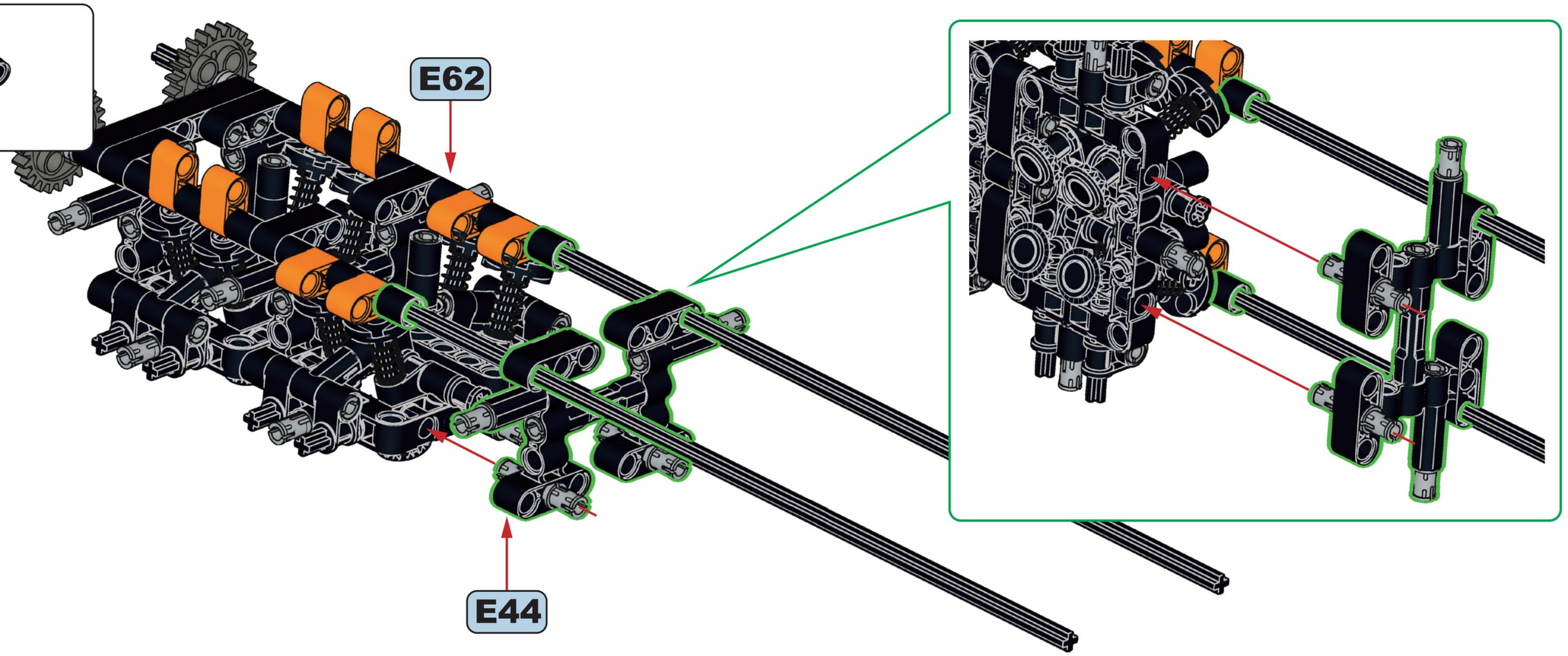

E64

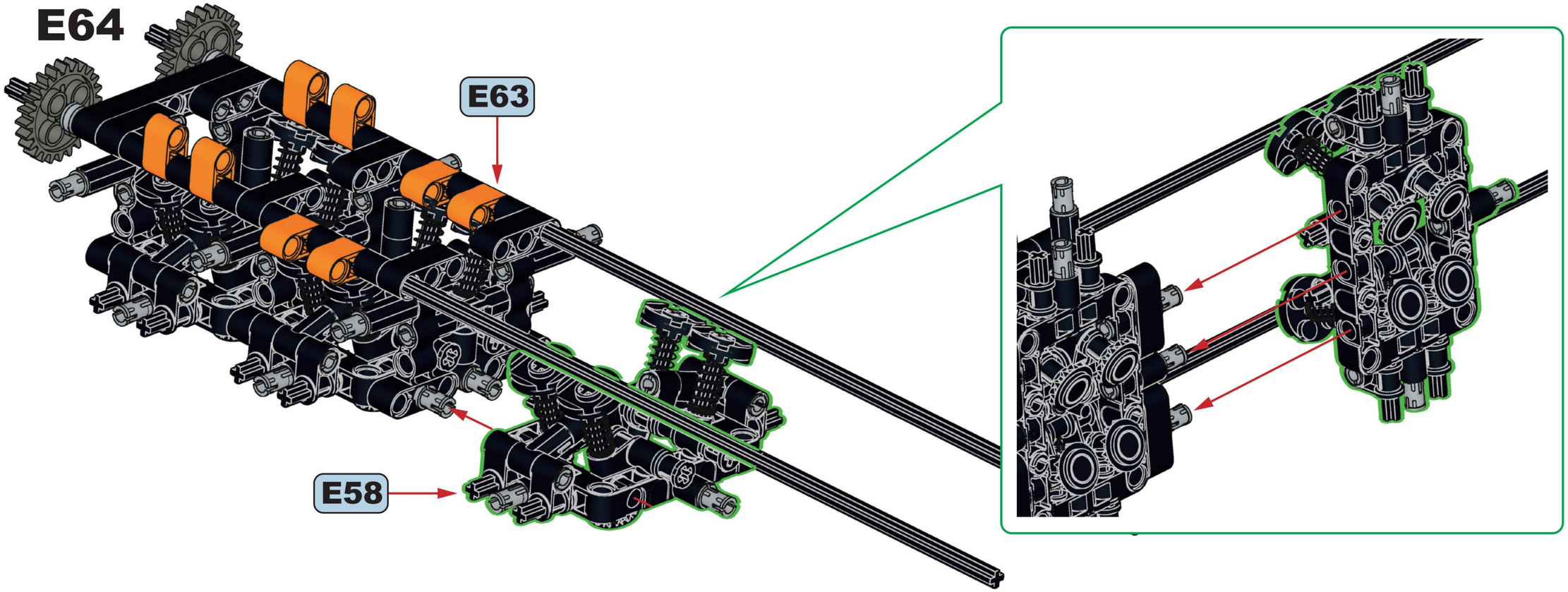

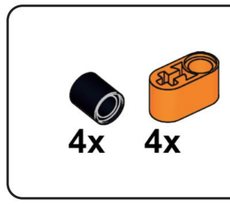

E65

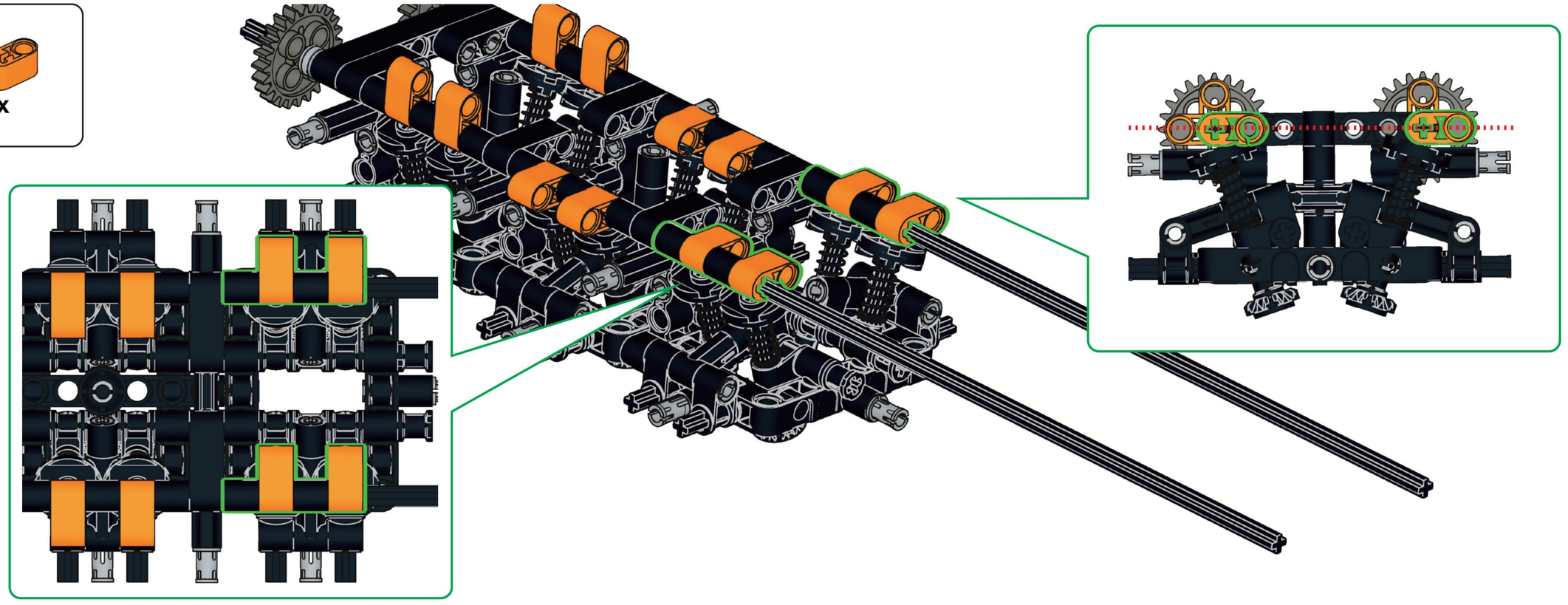

2x

E66

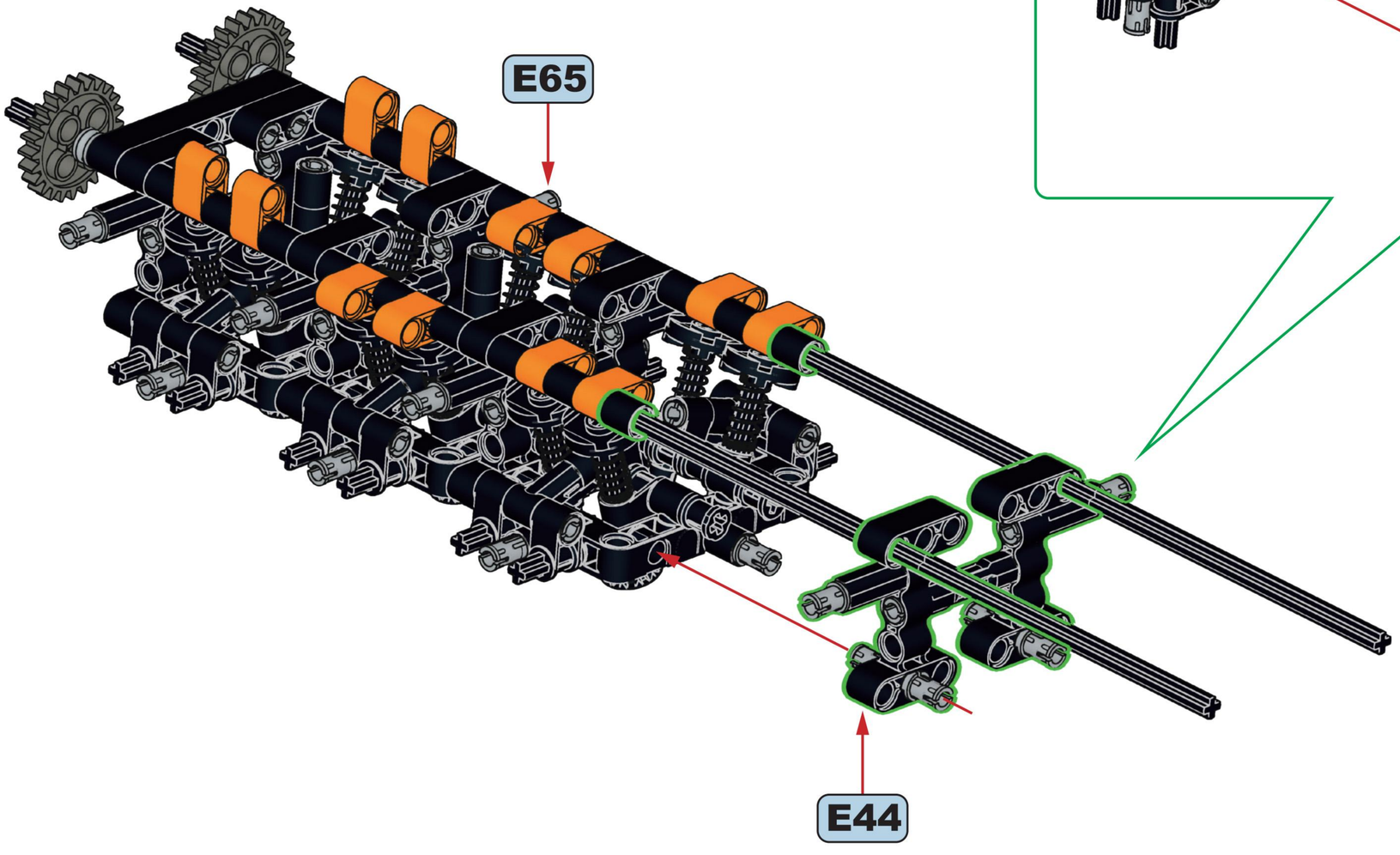

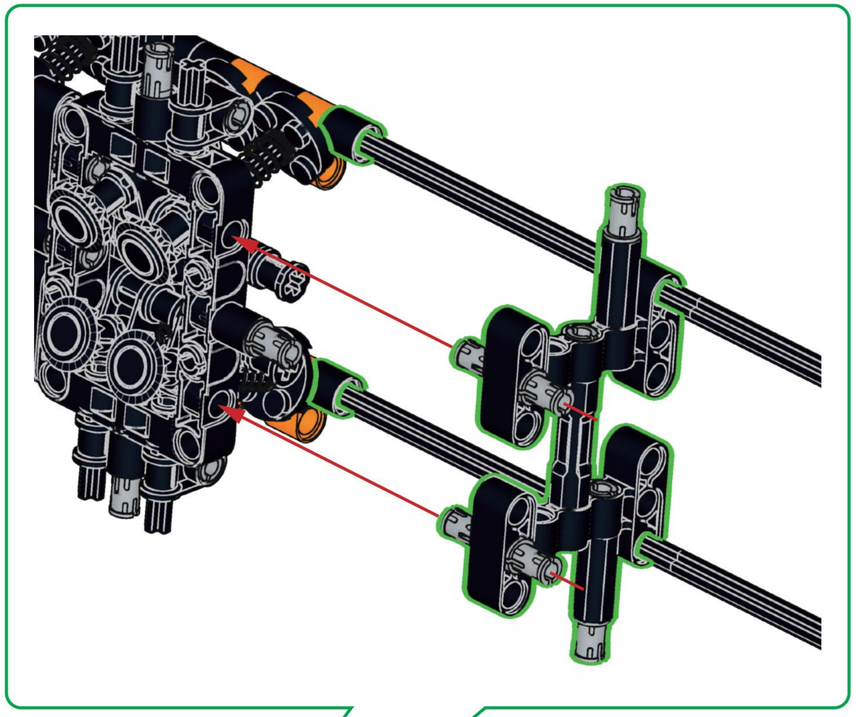

6

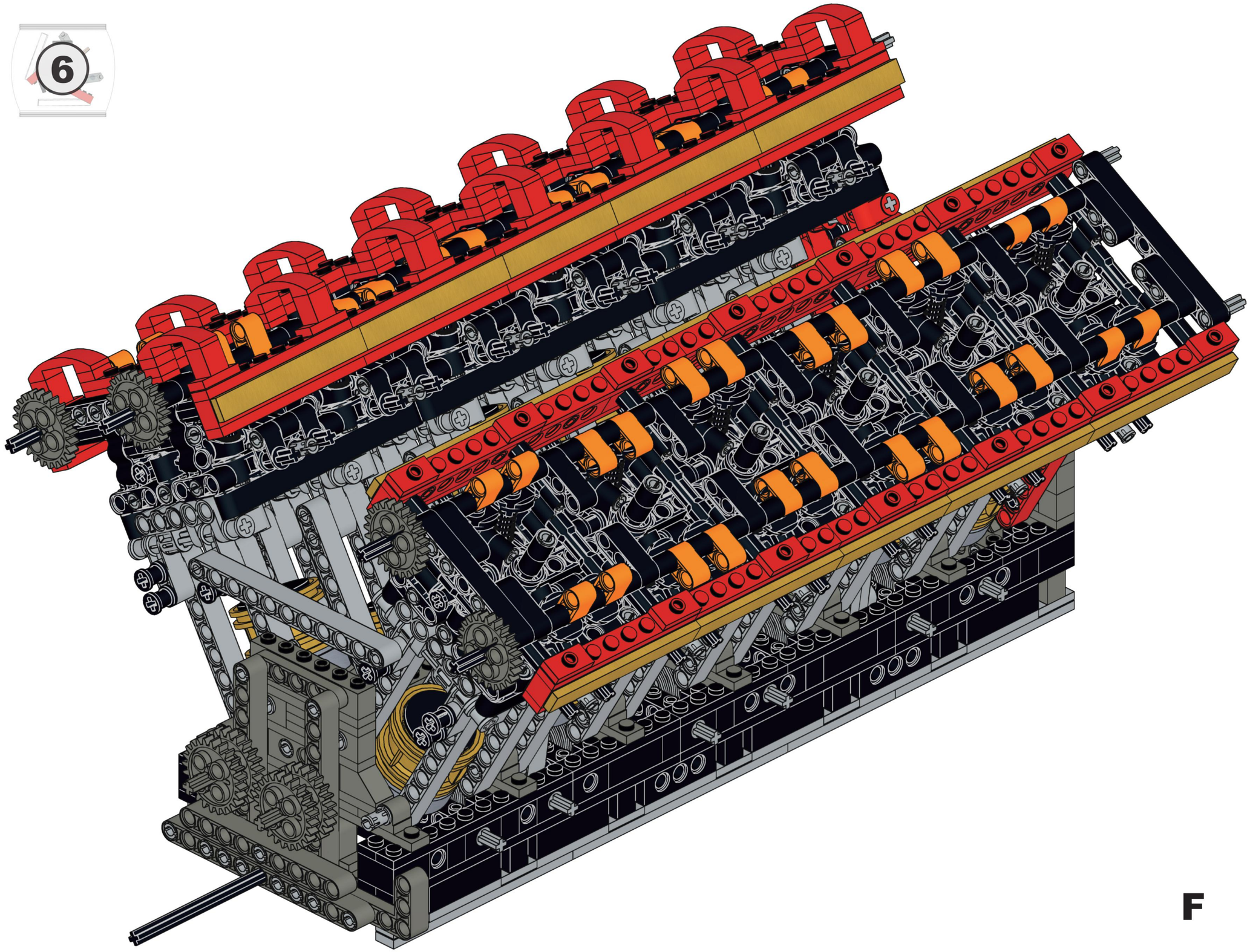

F

2x 8x

F1

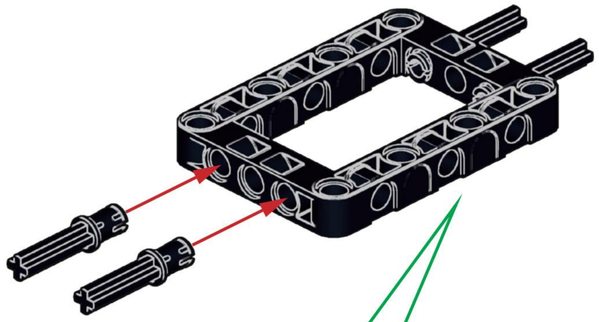

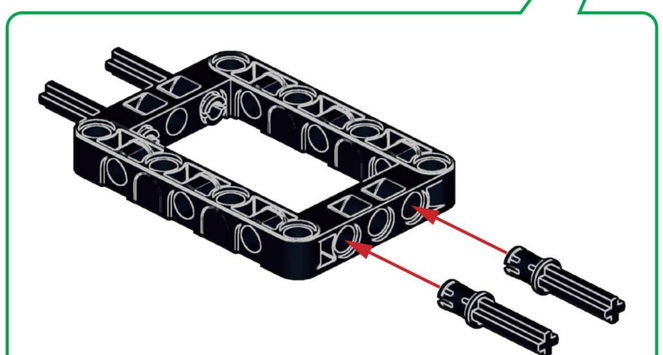

x2

6x 6x

F2

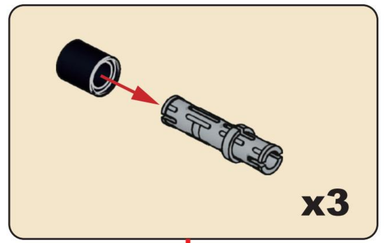

x3

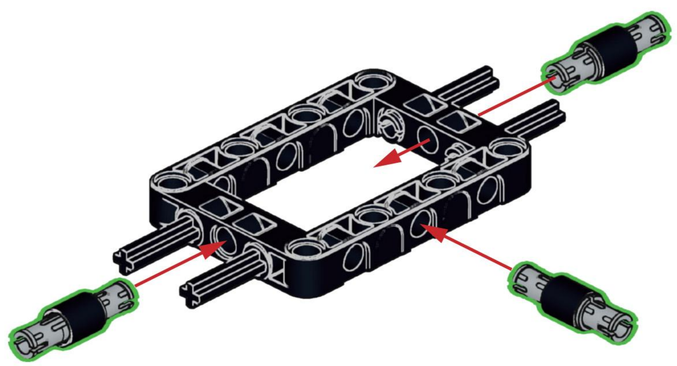

x2

4x 4x 6

F3

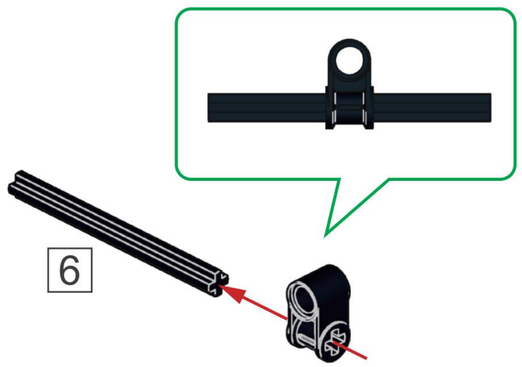

6

x4



4x

F4

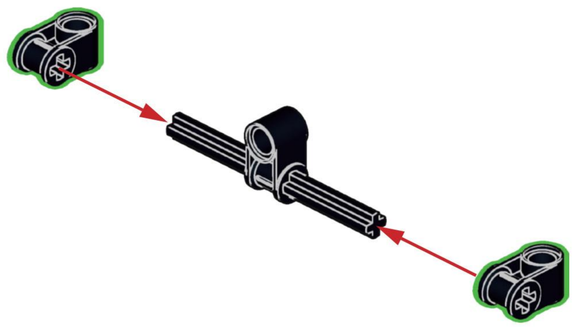

x2

2x 4x

F5

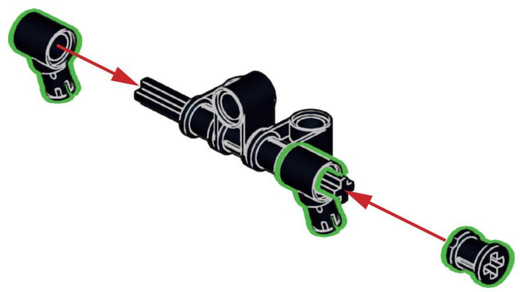

x2

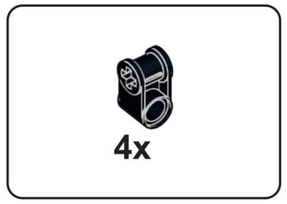

F6

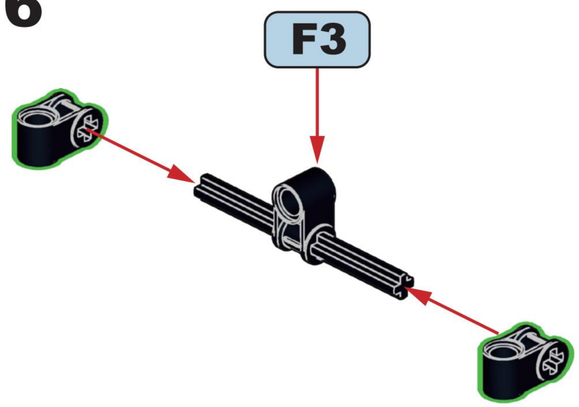

x2

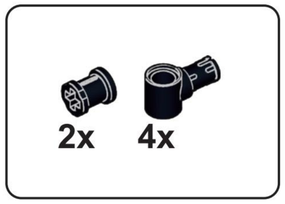

F7

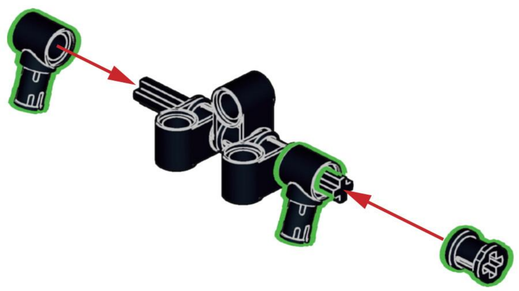

x2

F8

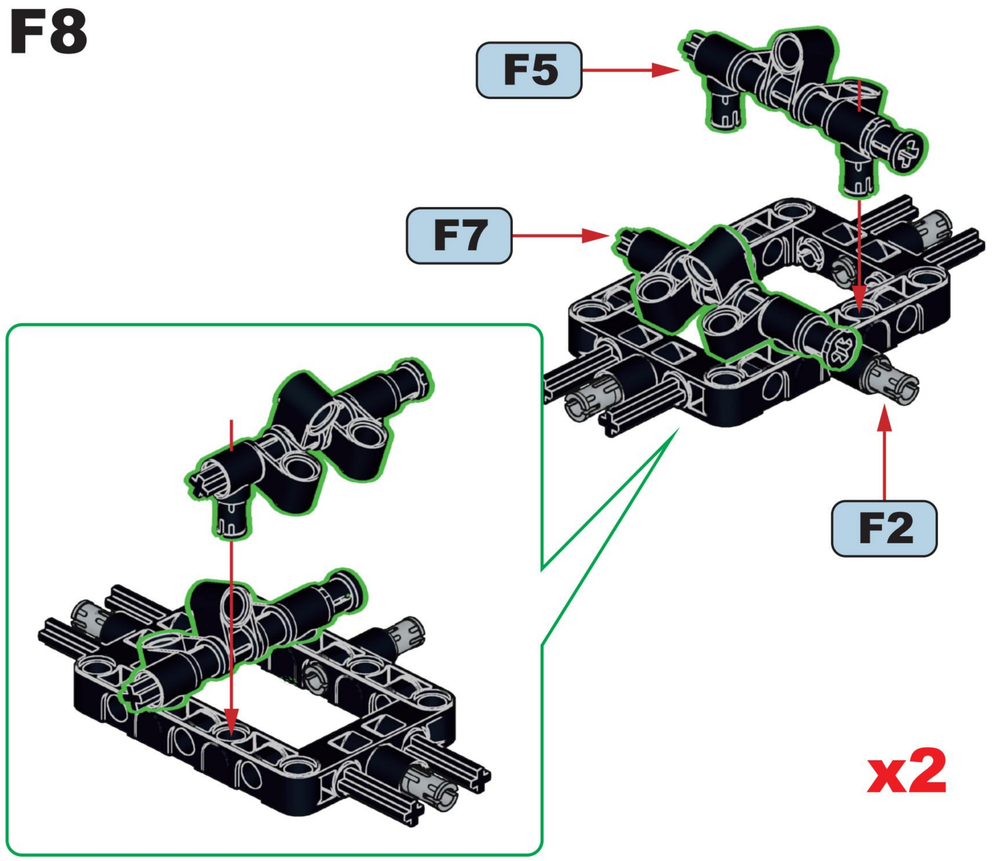

x2

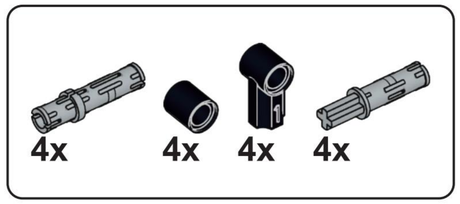

F9

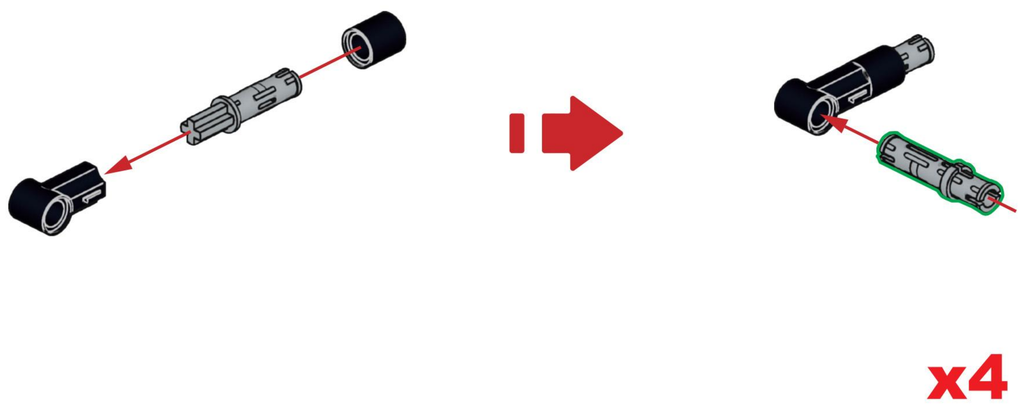

x4

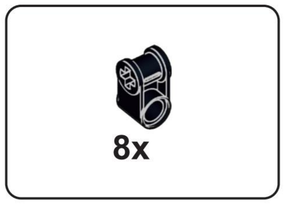

F10

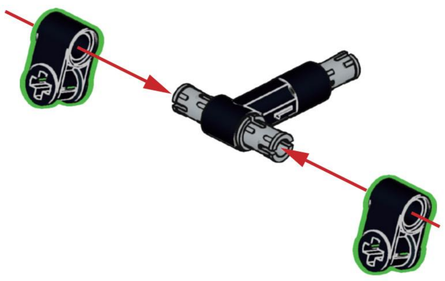

x4

F11

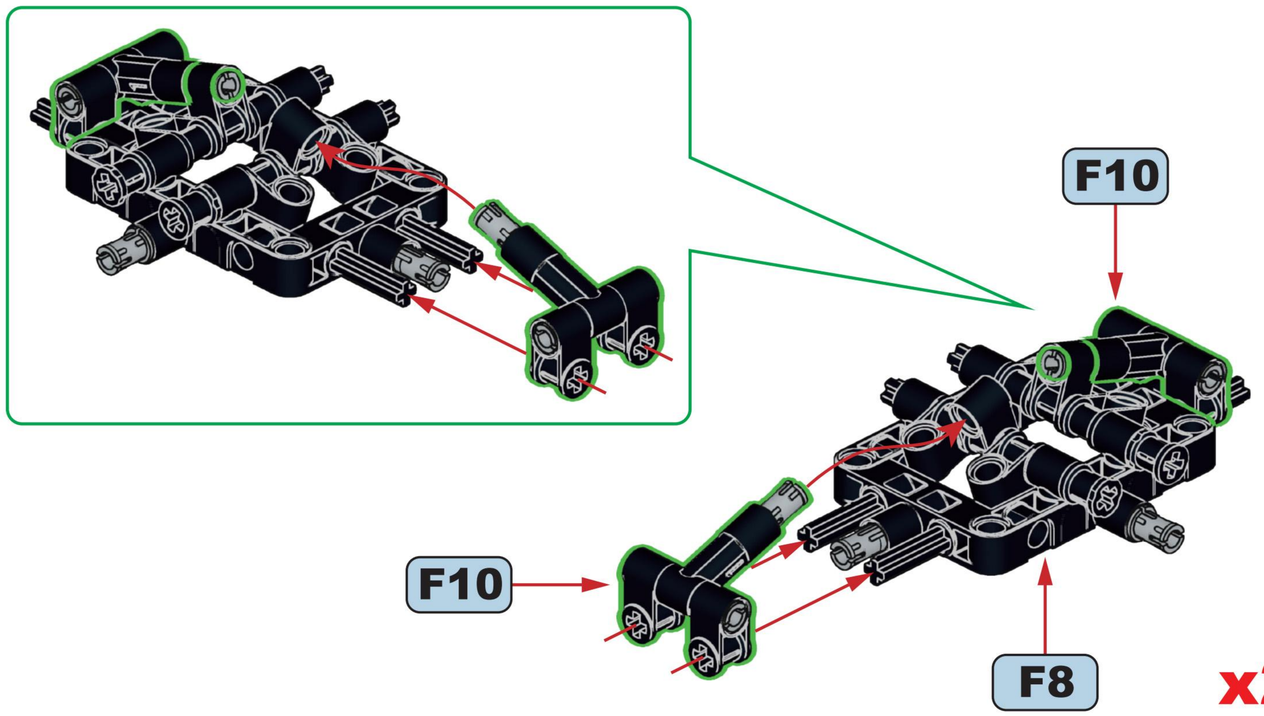

x2

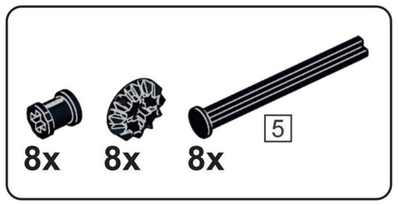

F12

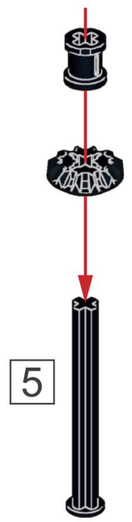



x8

F13

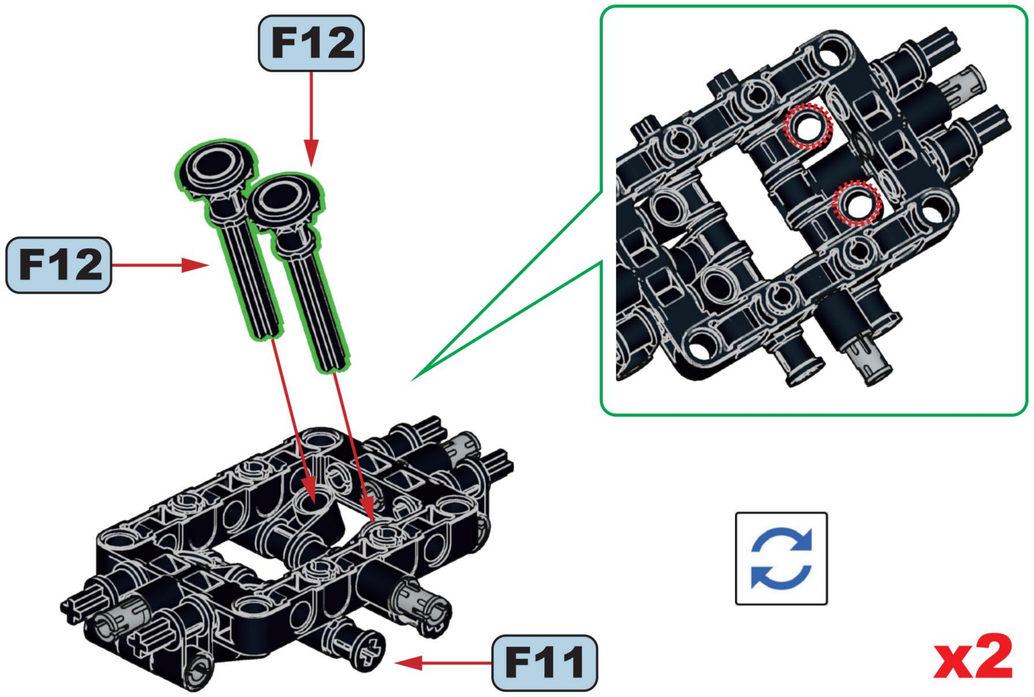

x2

F14

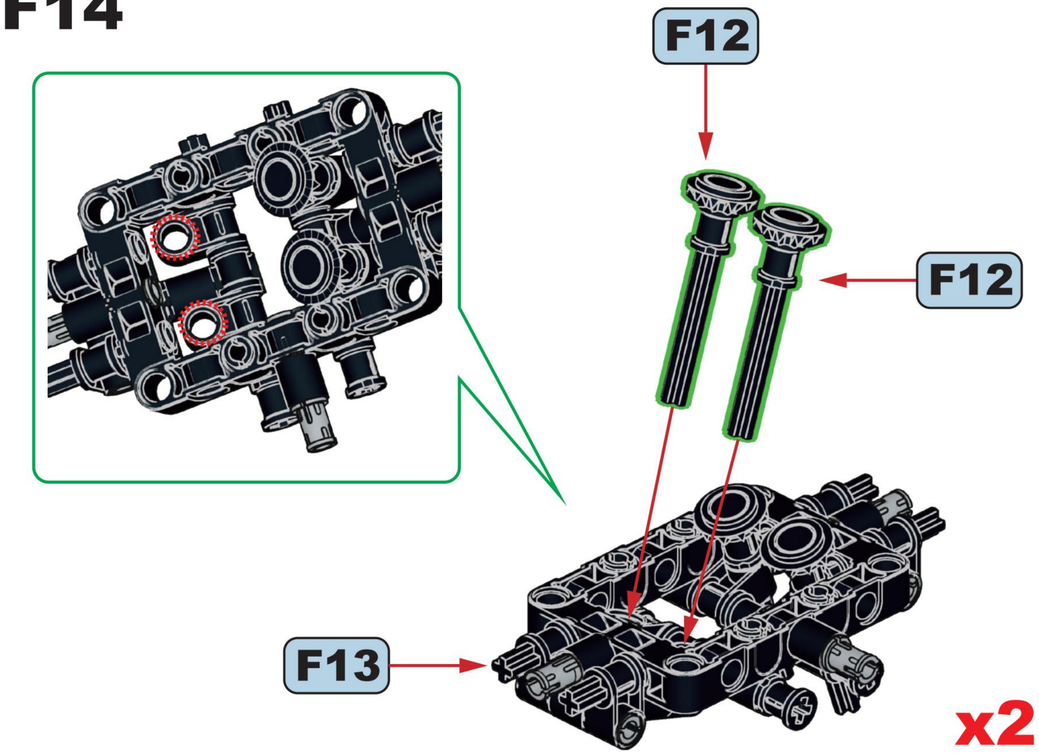

x2

8x 8x

F15

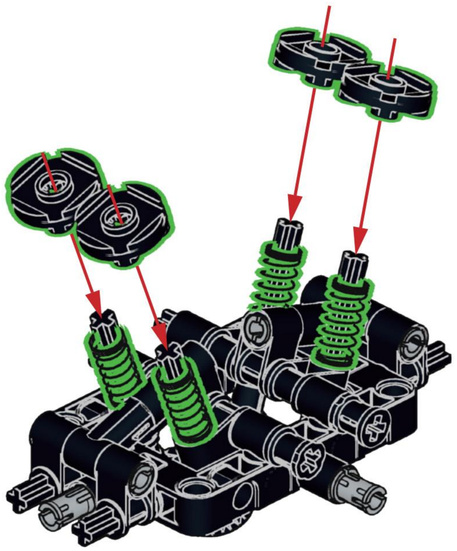

x2

F16

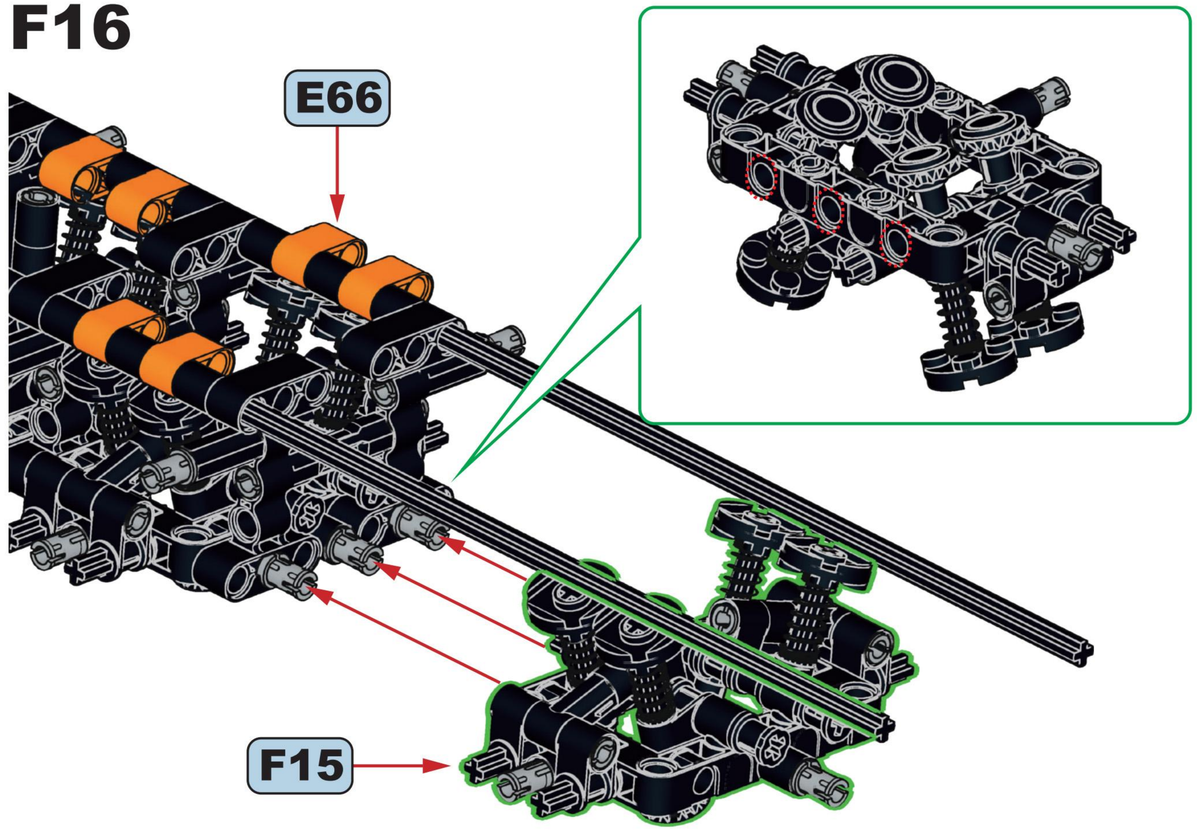

4x 4x

F17

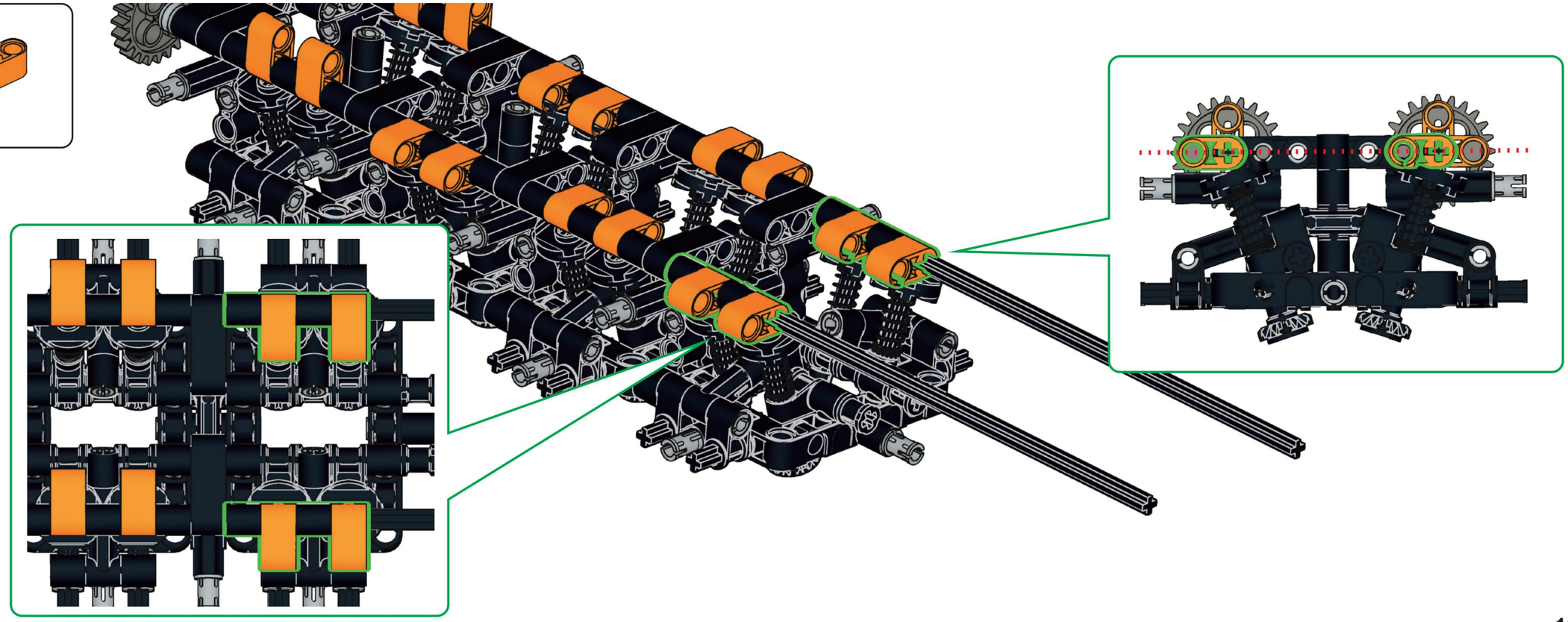

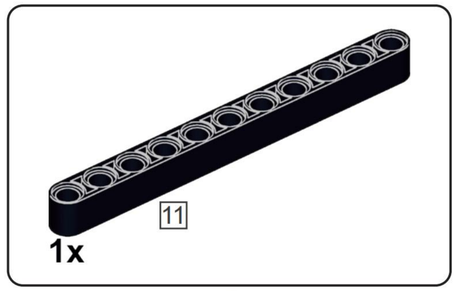



F18

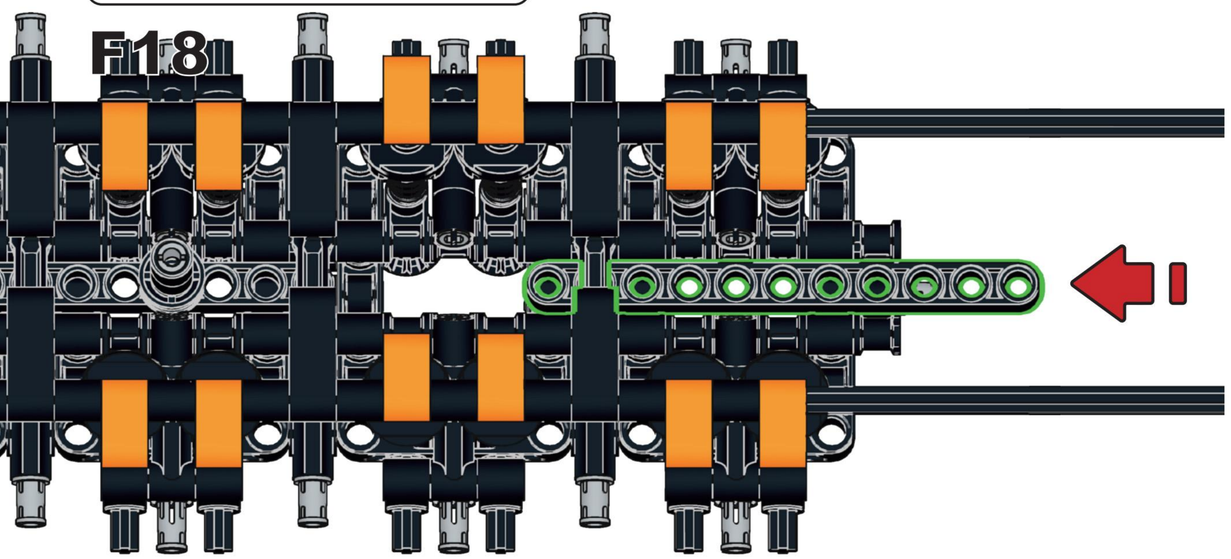

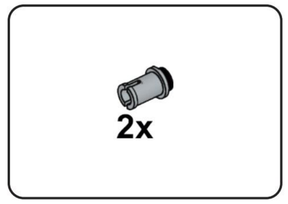



F19

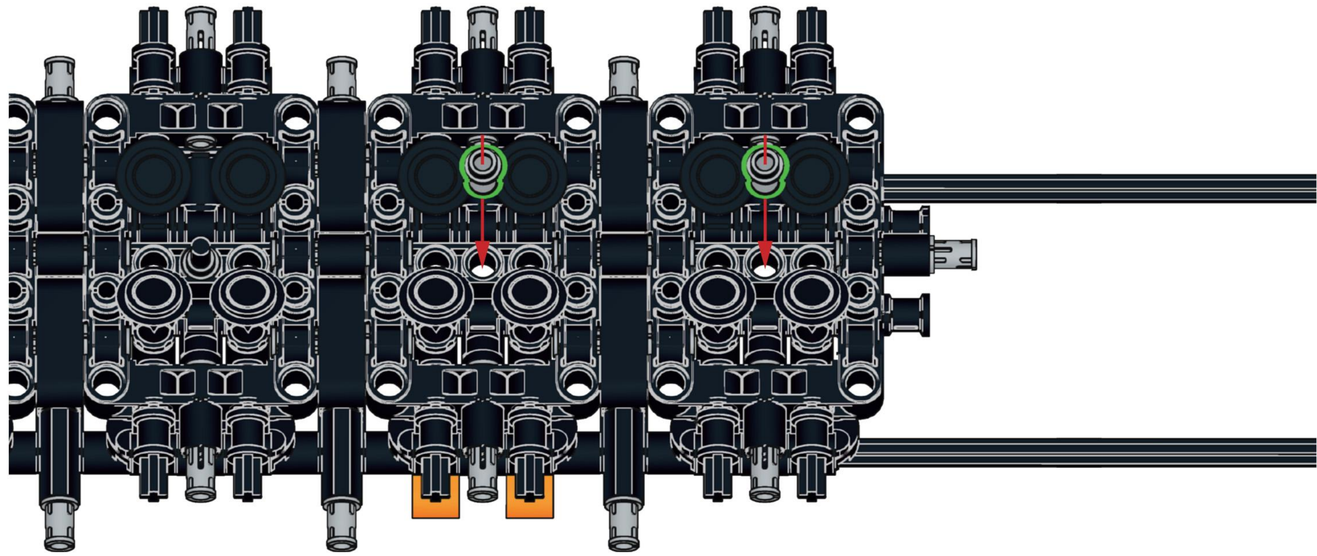

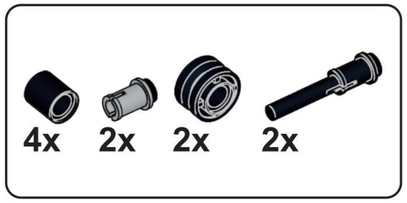

F20



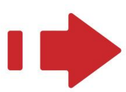



x2

F21

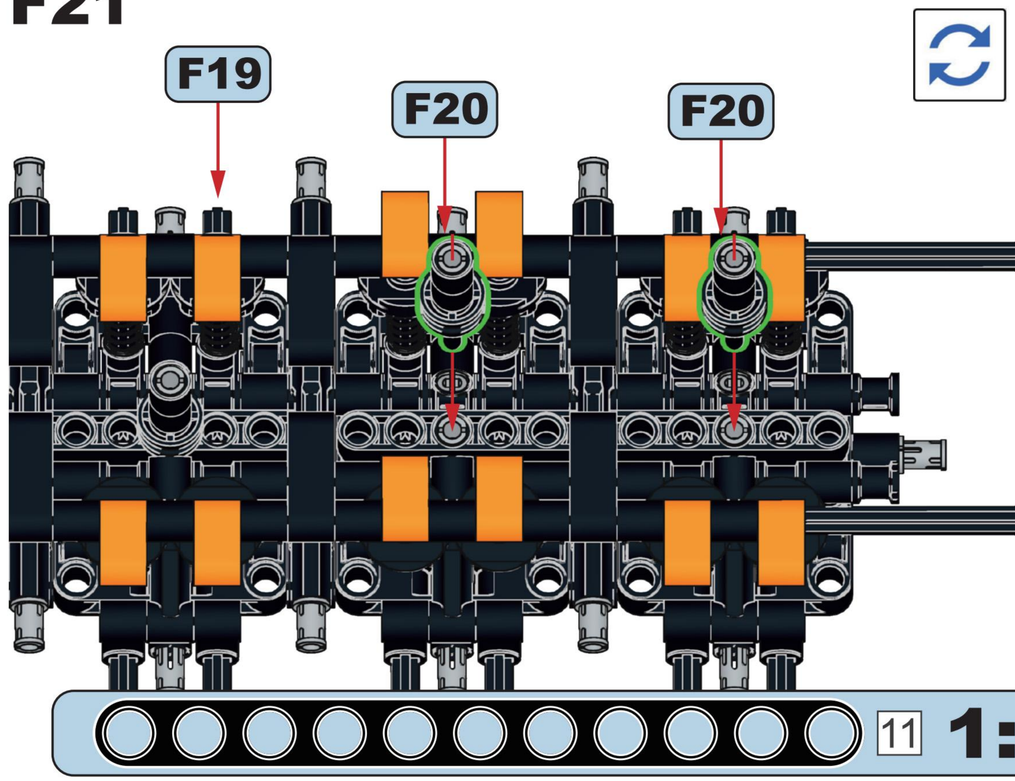

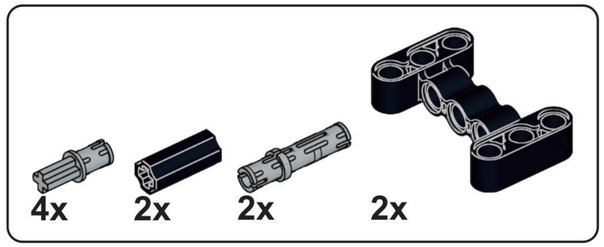

F22

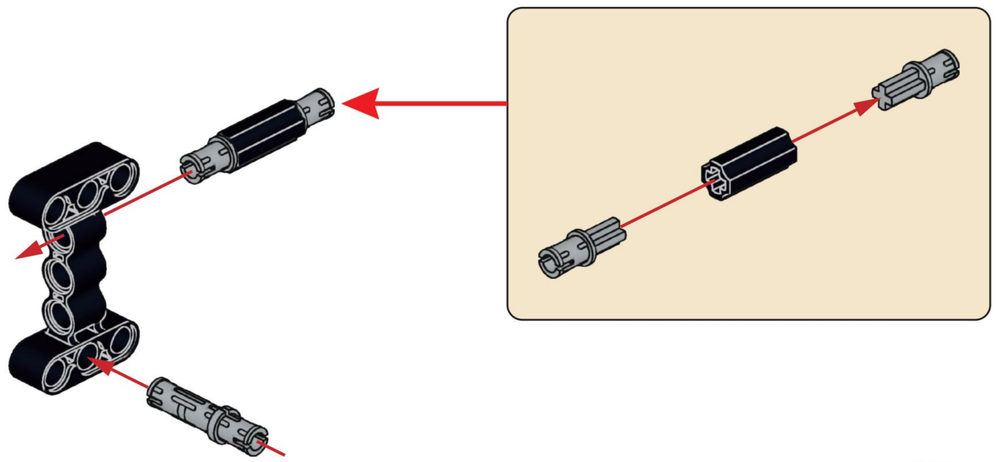

x2

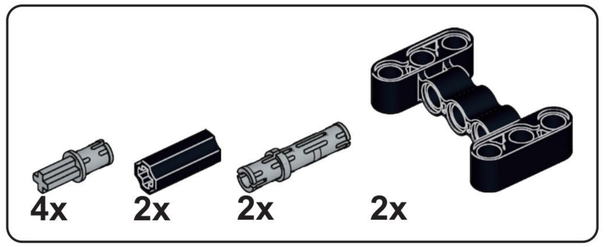

F23

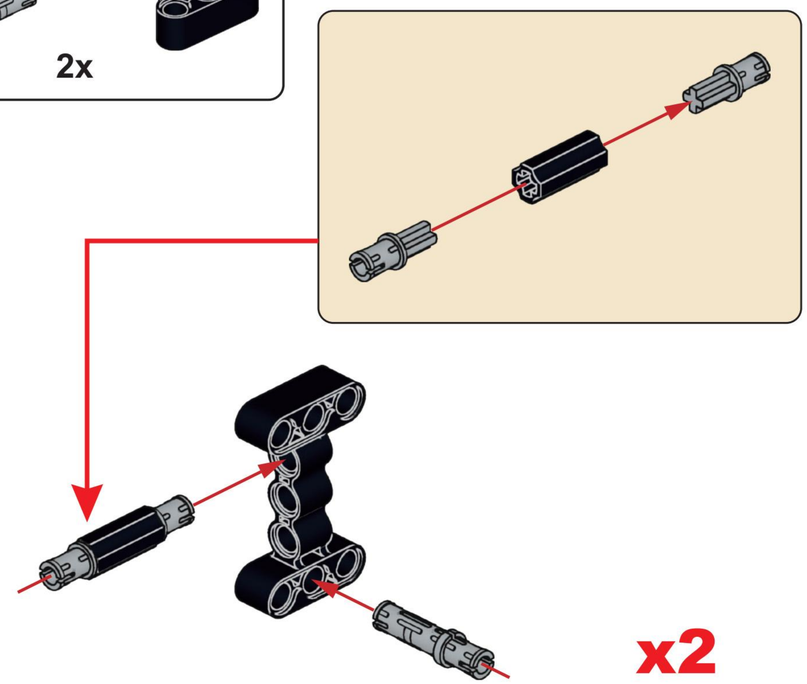

x2

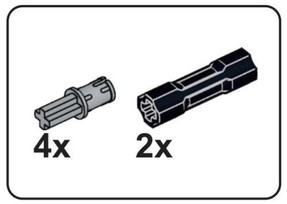

F24

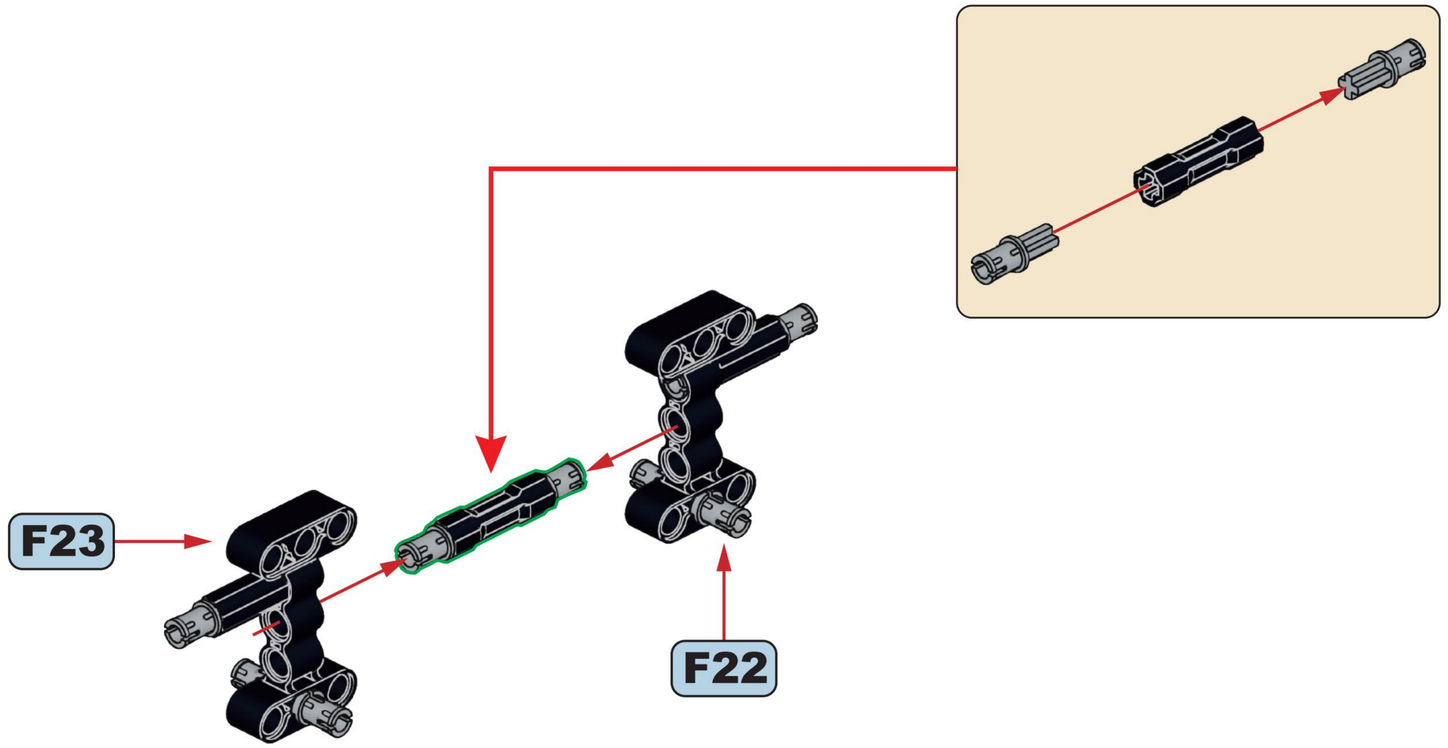

x2

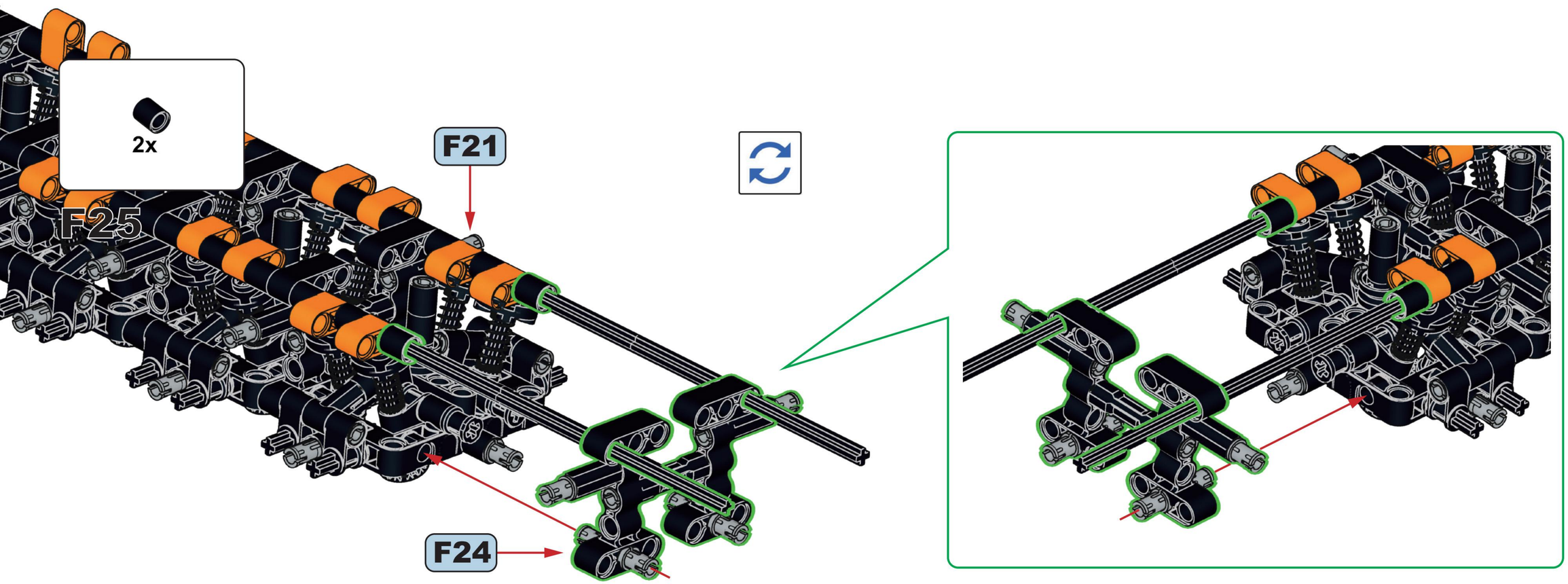
2x
F25
F21
F24

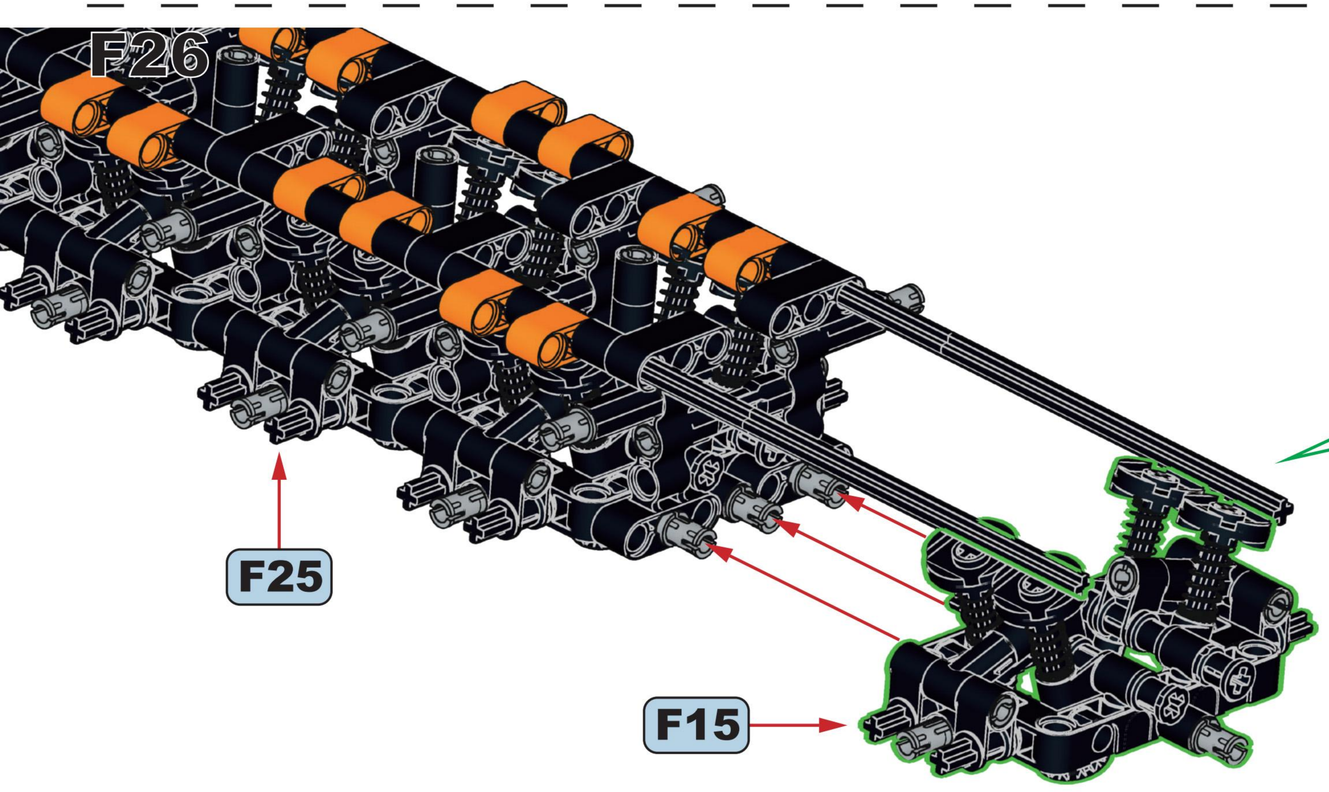
F26
F25
F15

4x 4x

F27

2x

F28

F27

F24

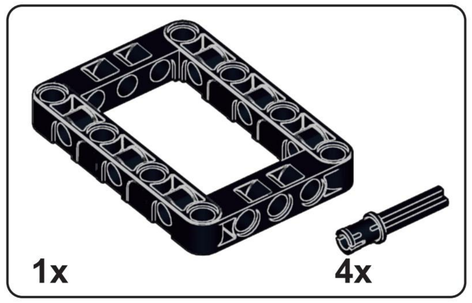

F29

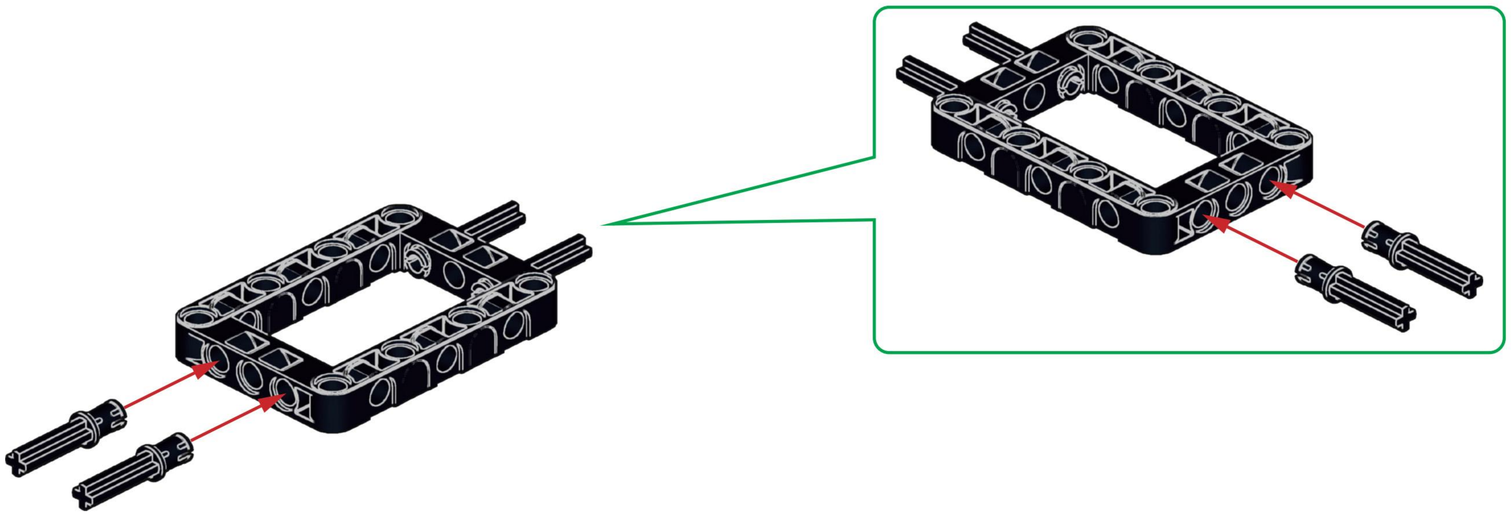



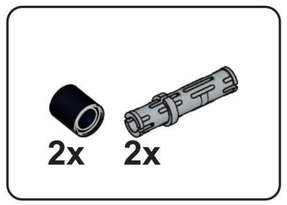

F30

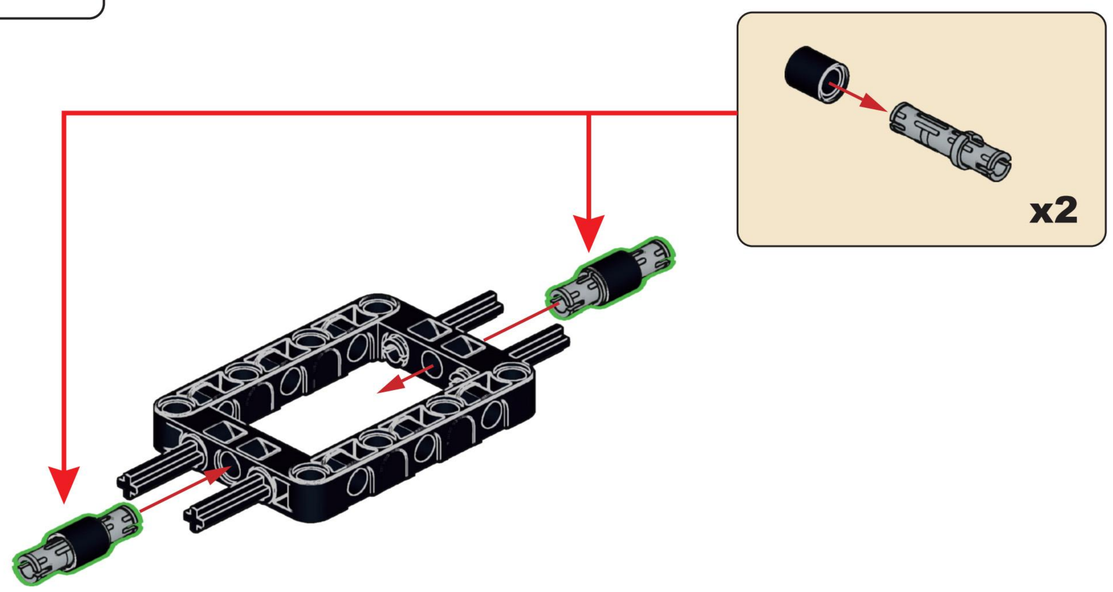

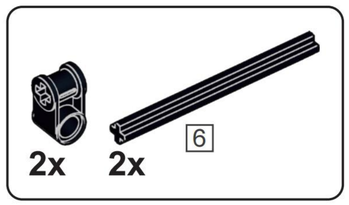

F31

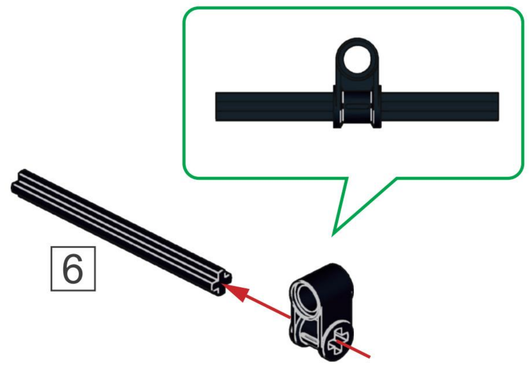

x2

2x

F32

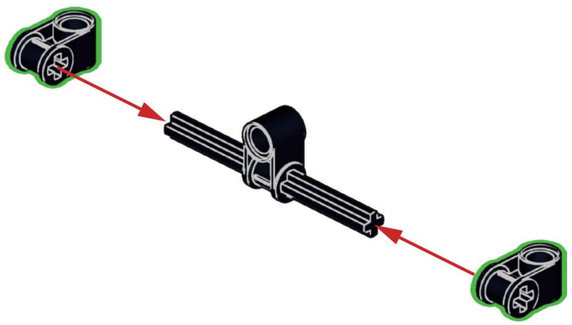

2x

F33

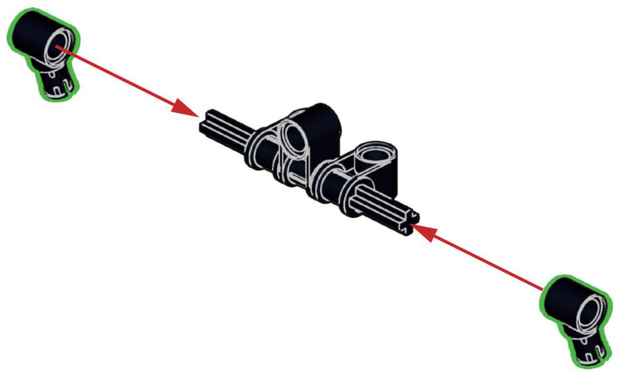

2x

F34

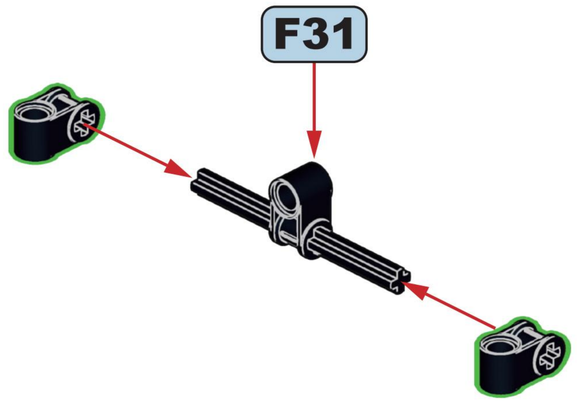

1x 2x

F35

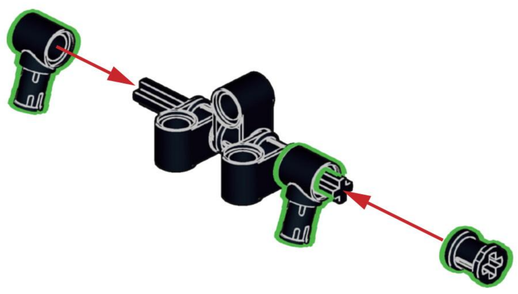

F36

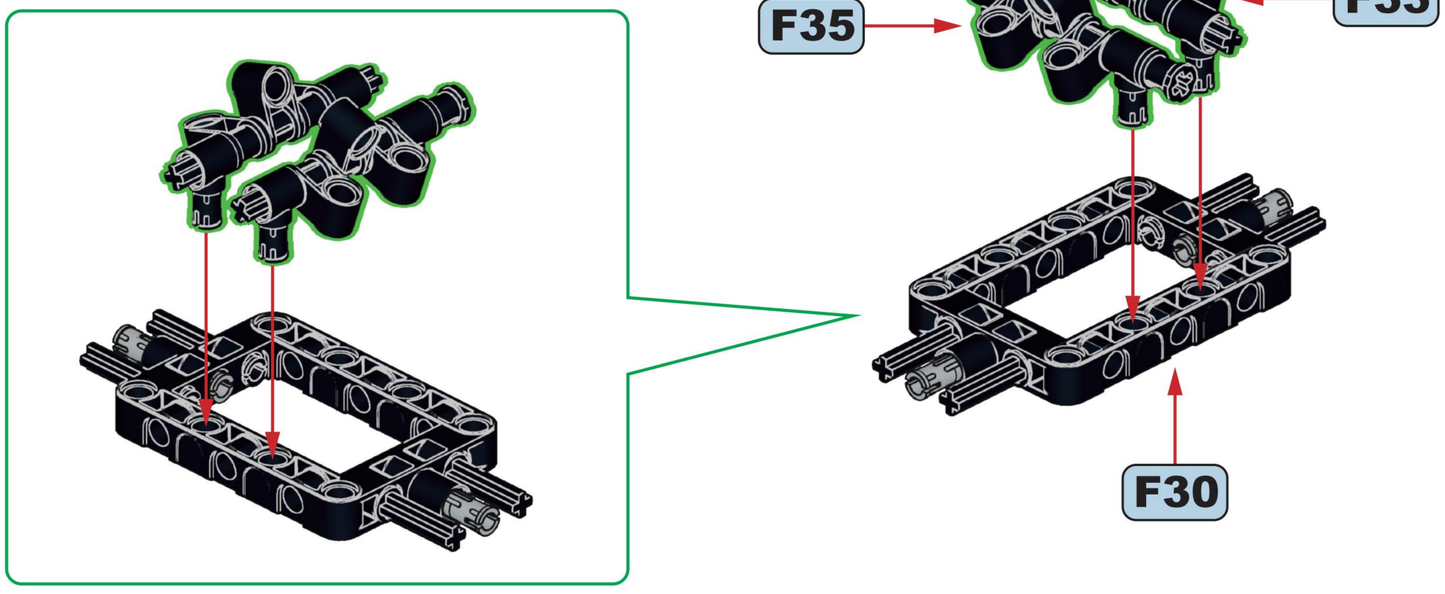

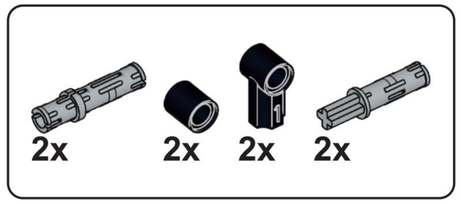

F37

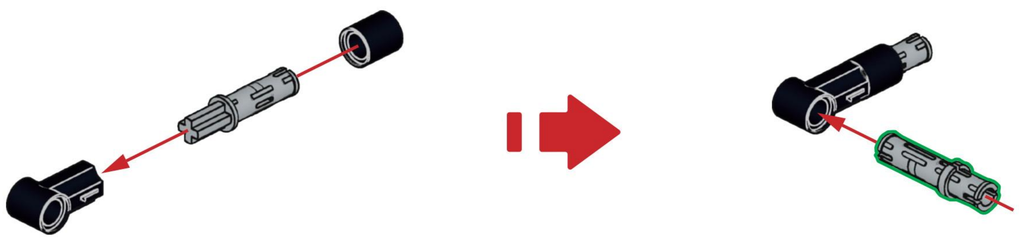

x2

F38

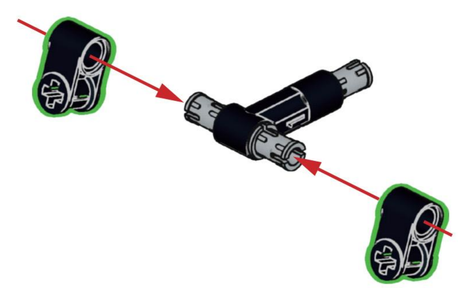

x2

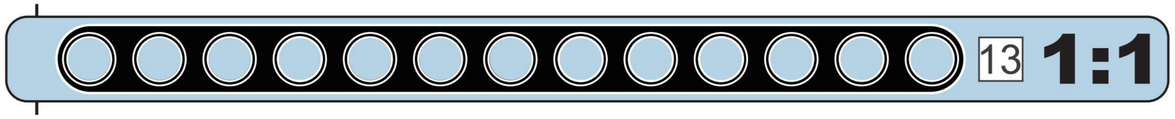

F39

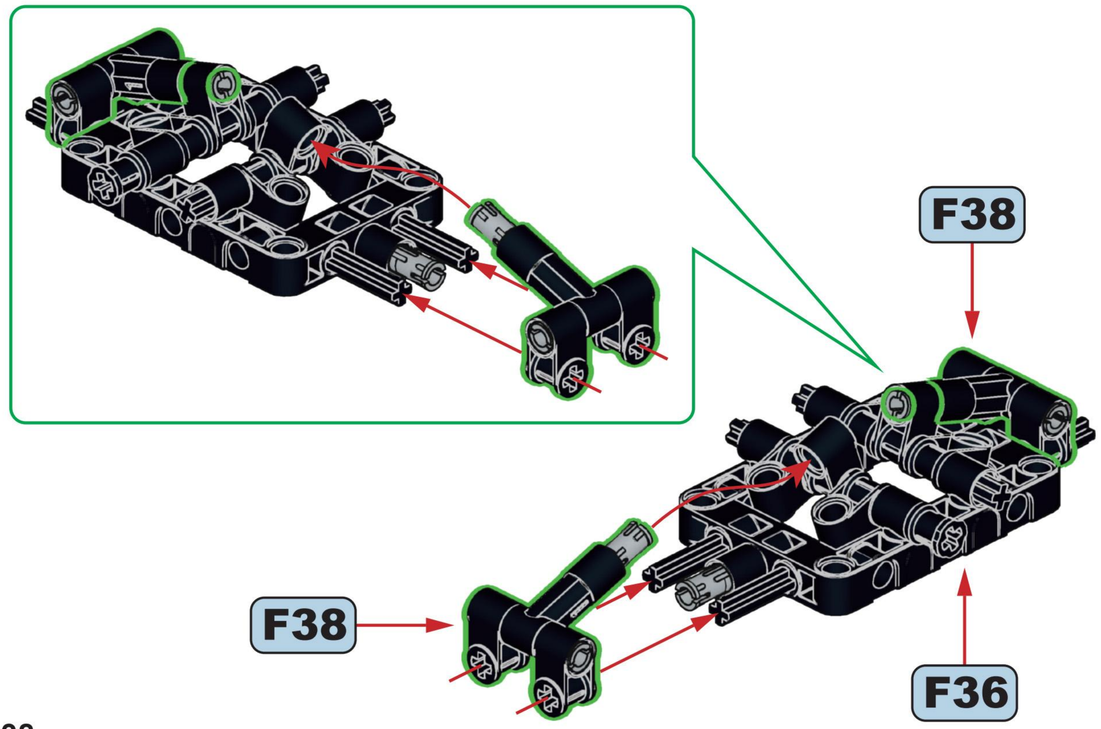

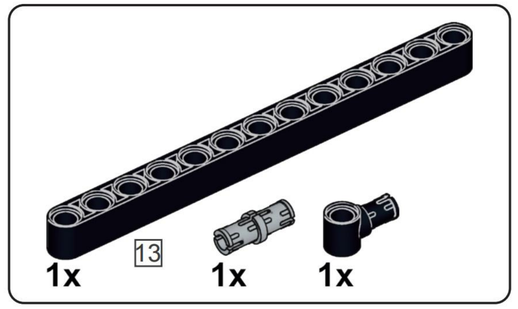

F40

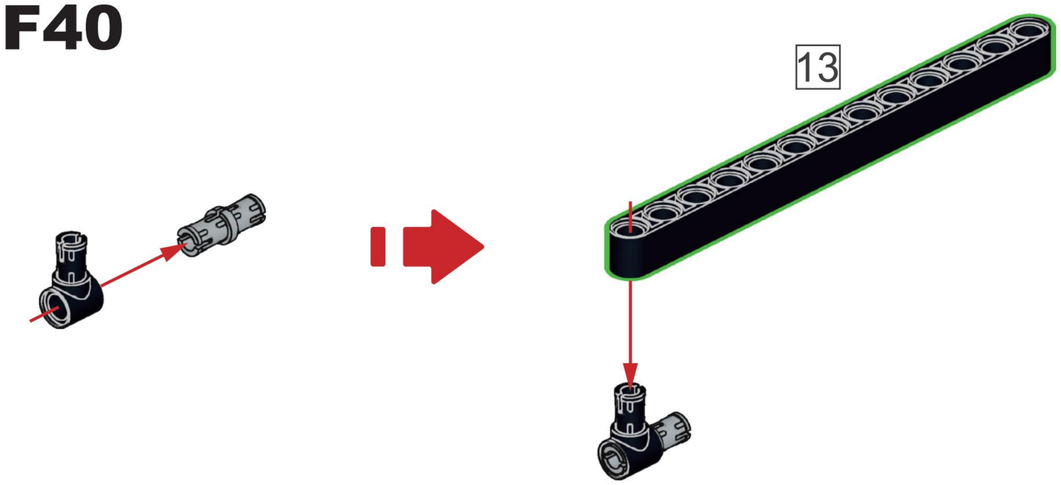

F41

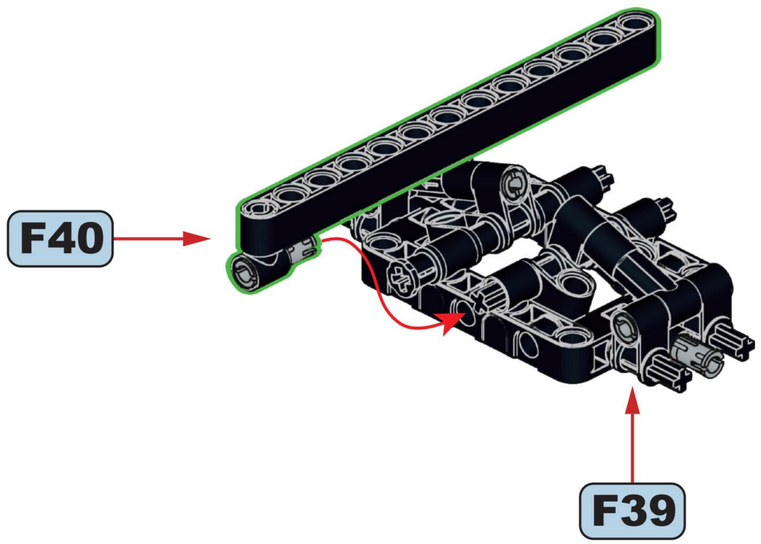

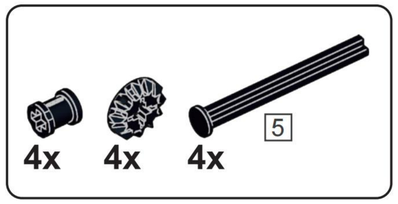

F42





x4

F43

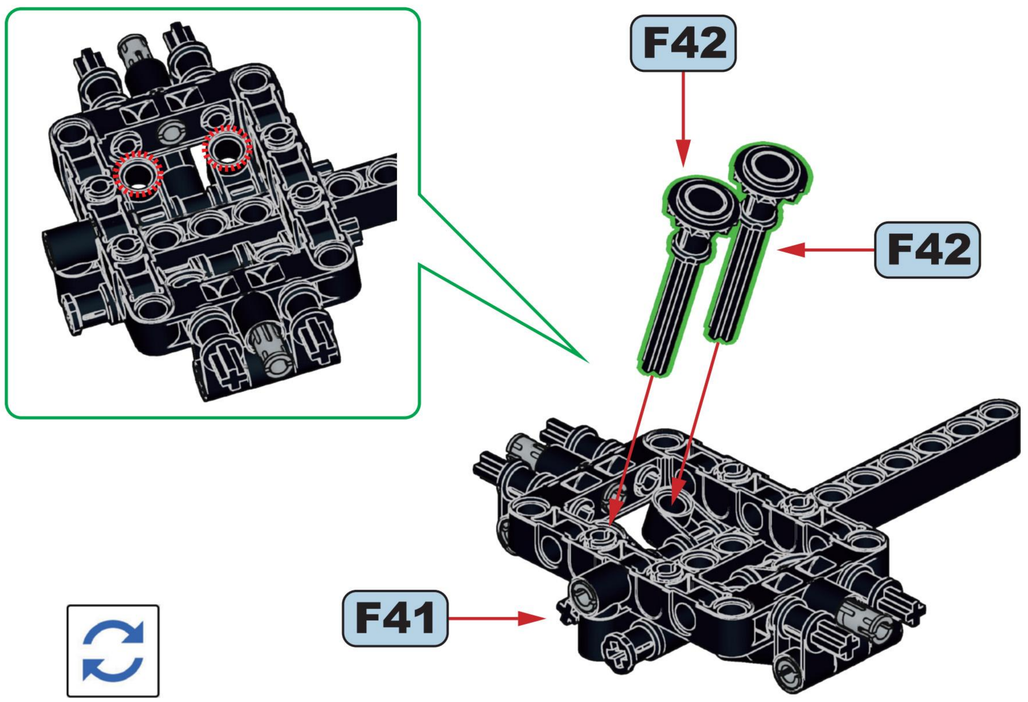

F44

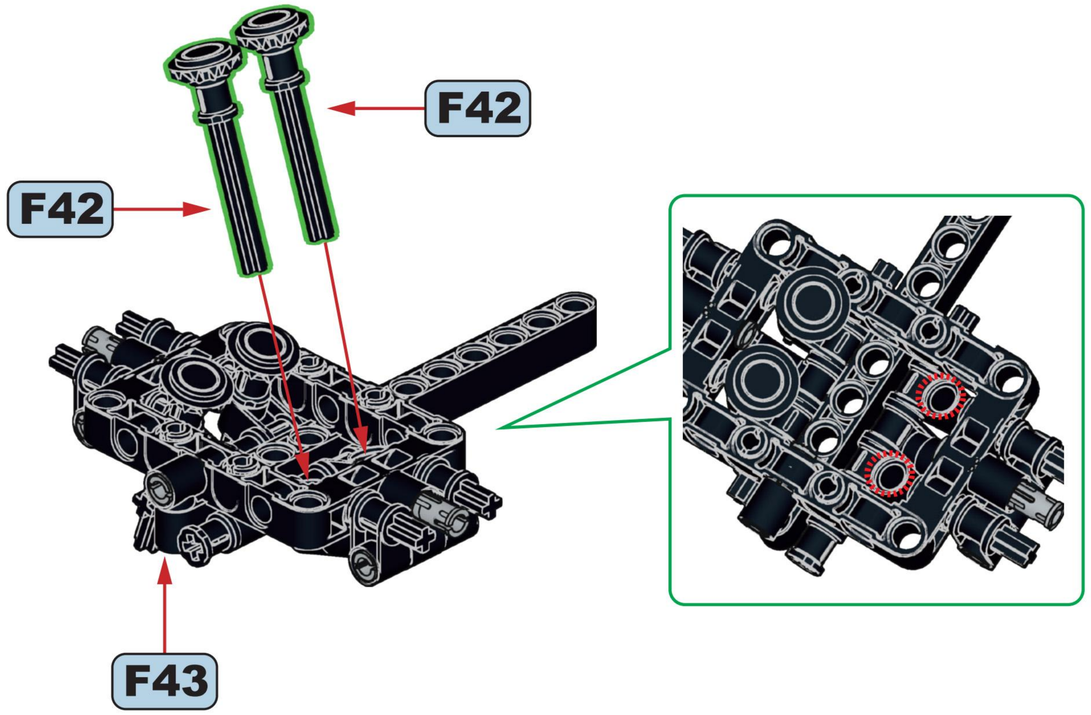

4x 4x

F45

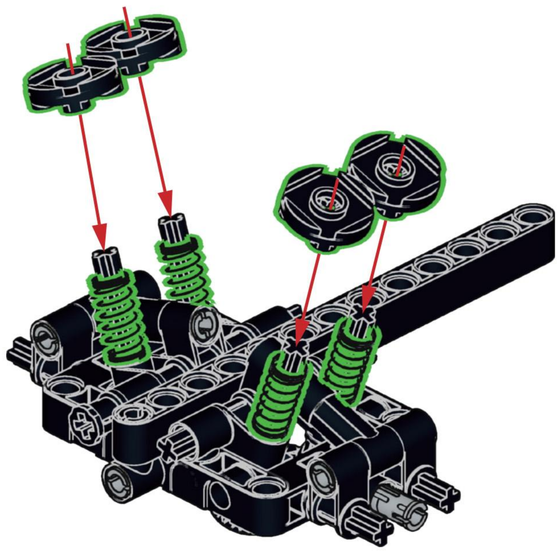

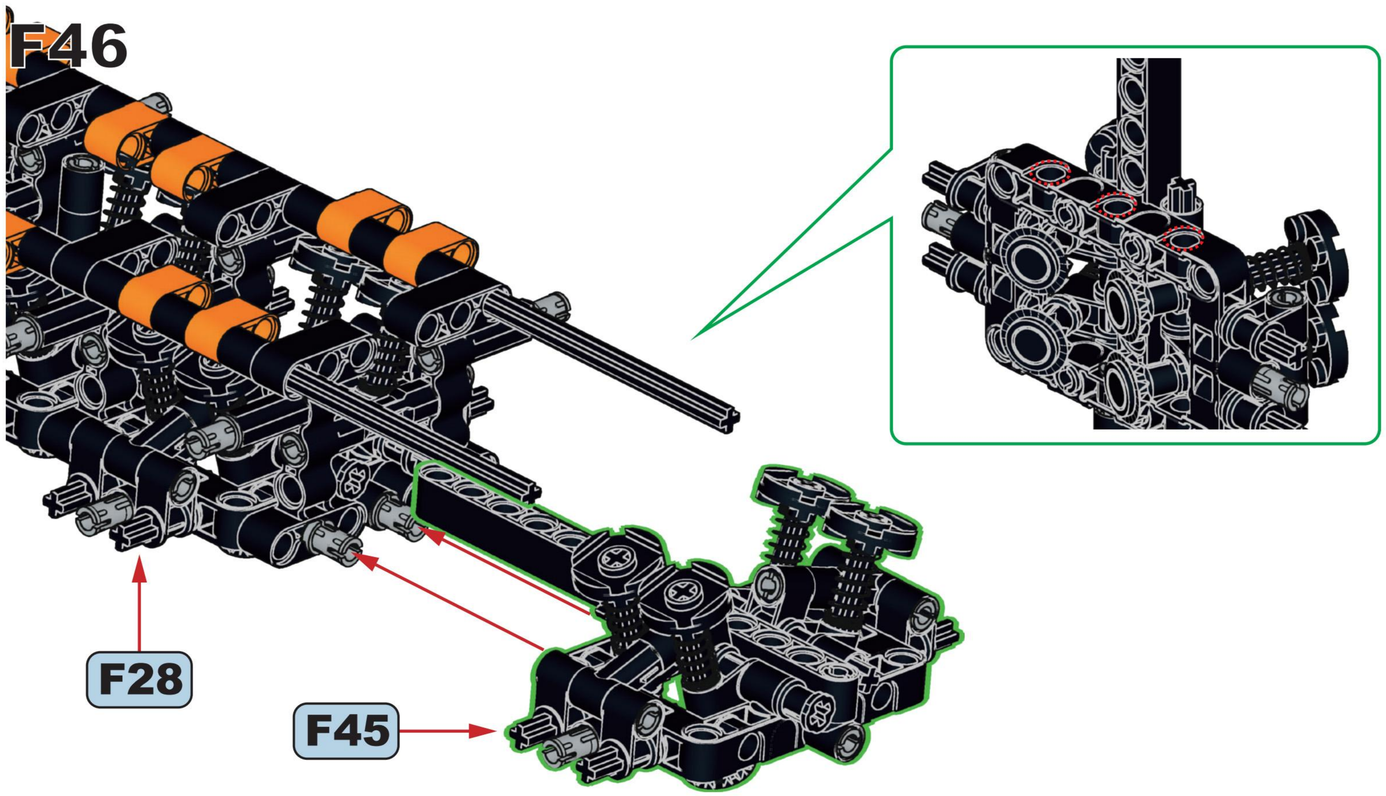

2x

F47

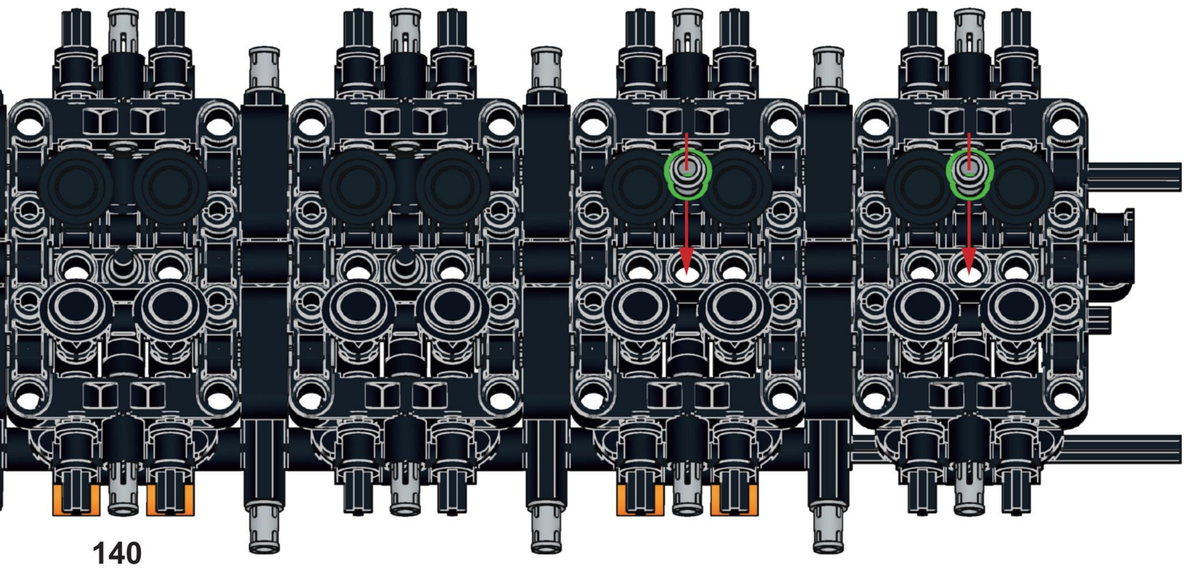

4x 2x 2x 2x

F48

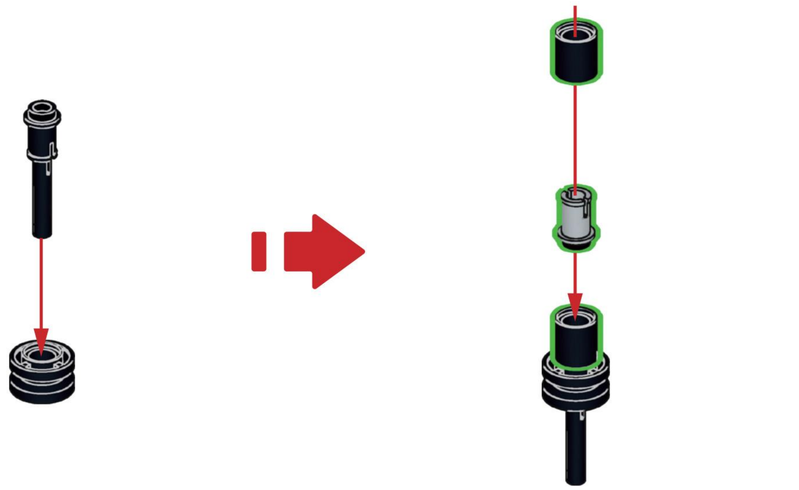

F49

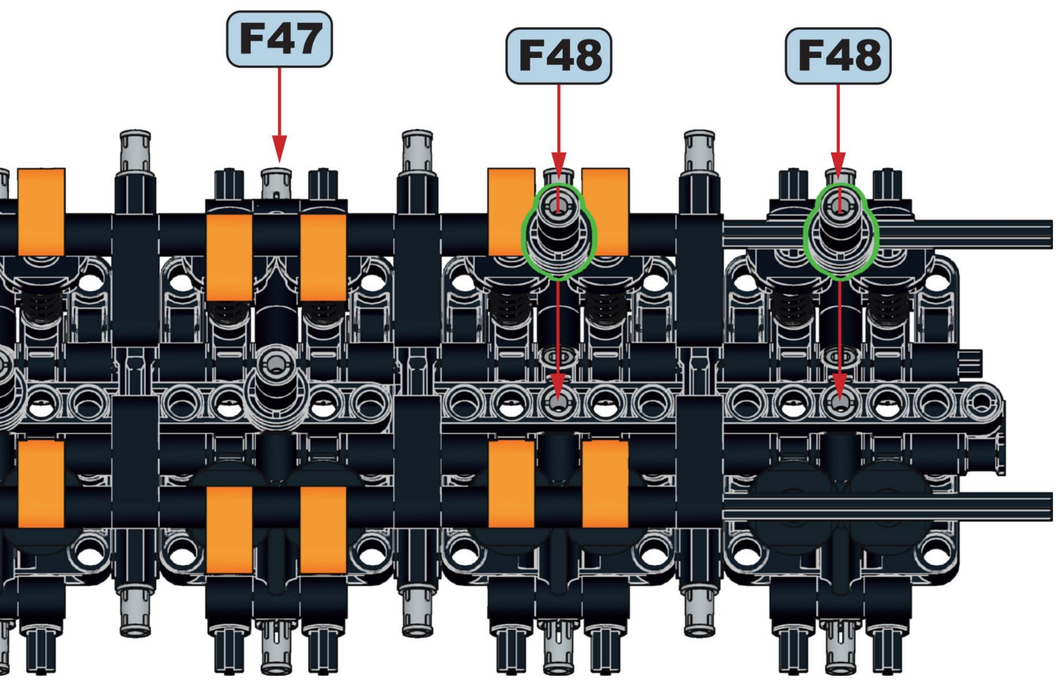



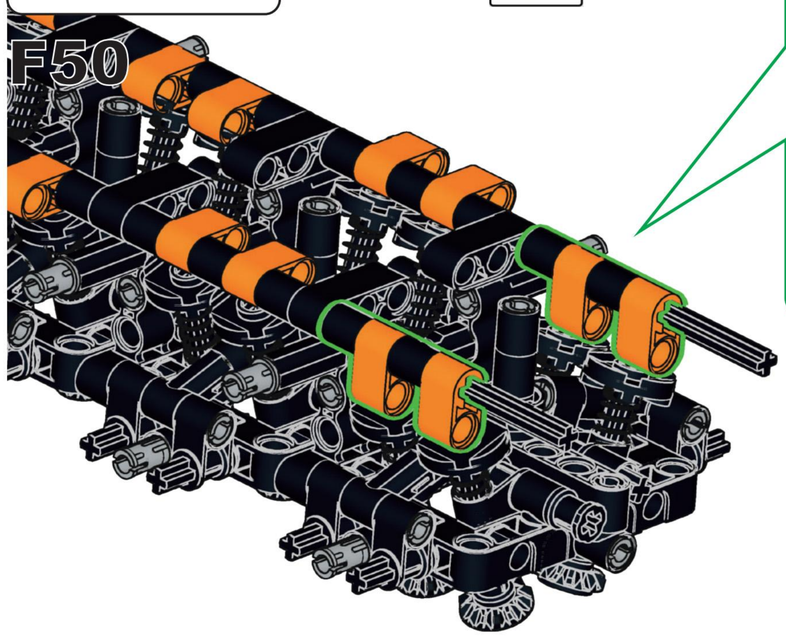

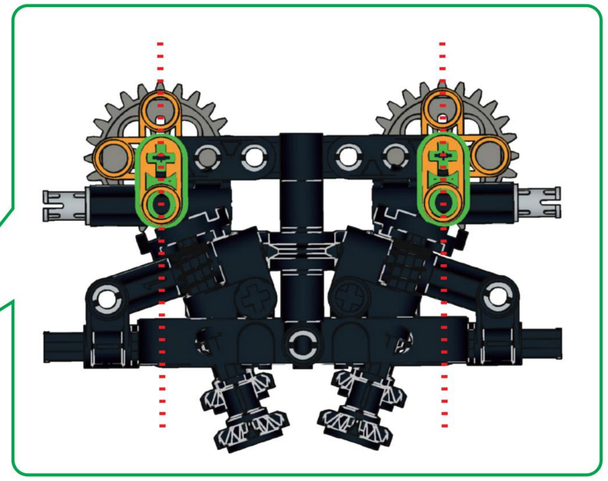

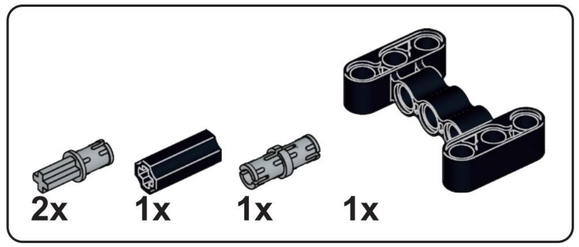

F51

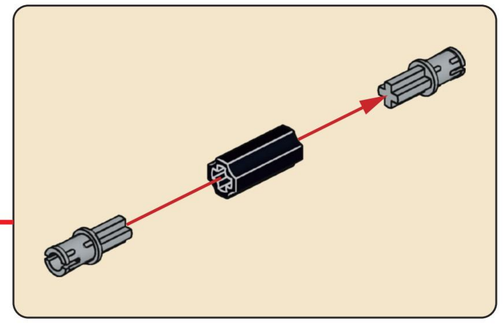

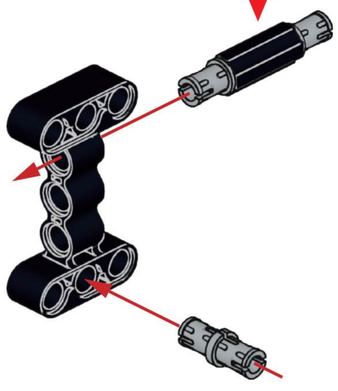

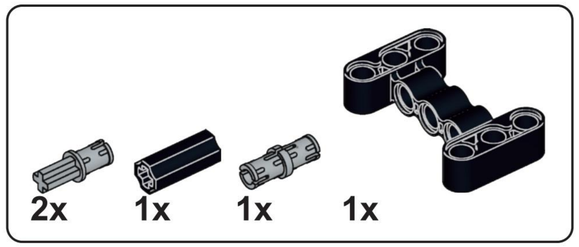

F52

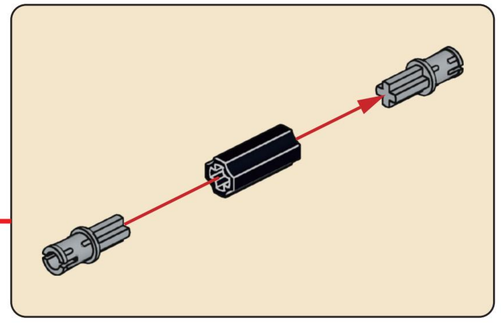

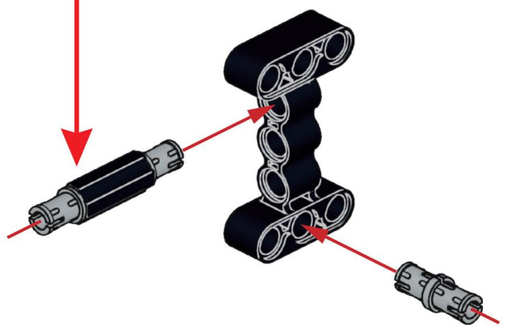

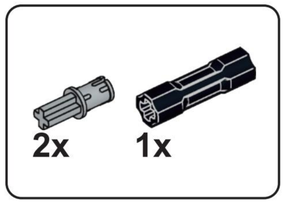

F53

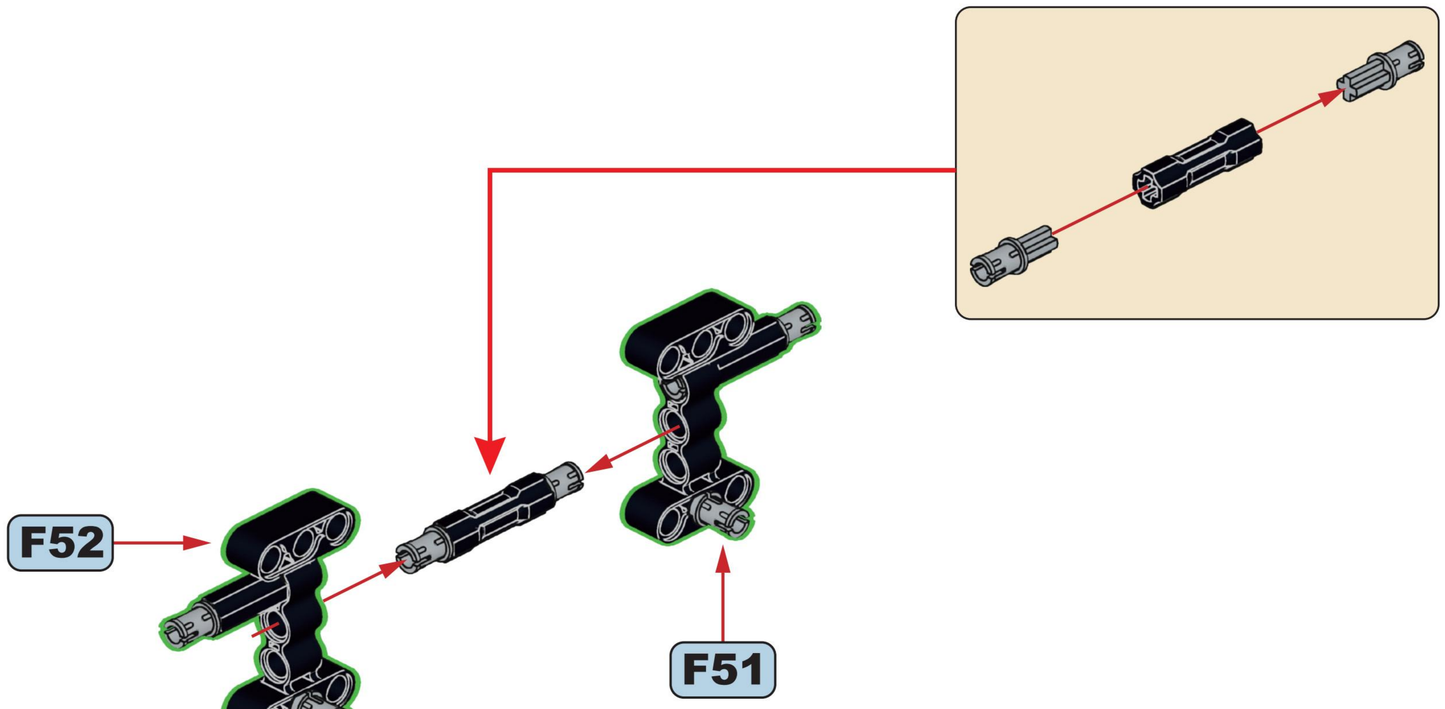

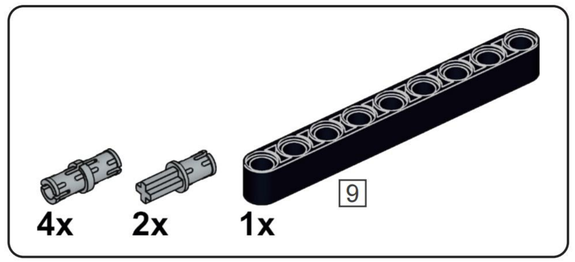

F54

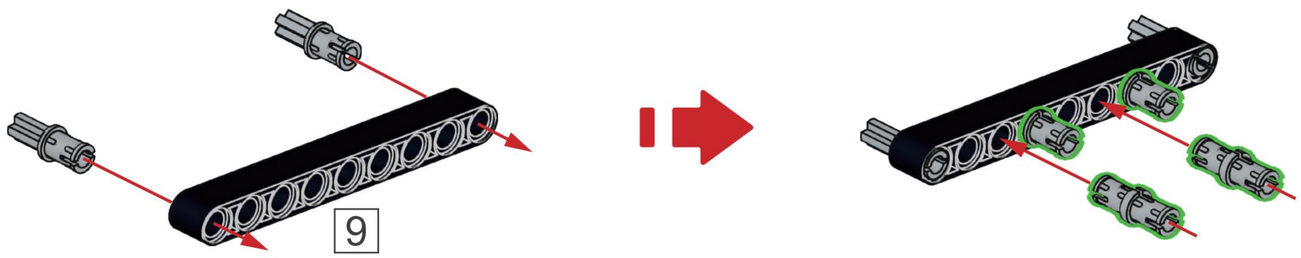

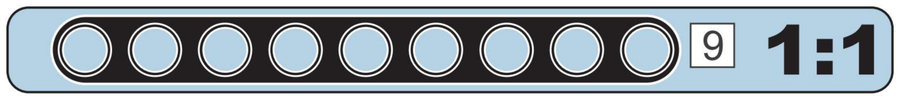

F55

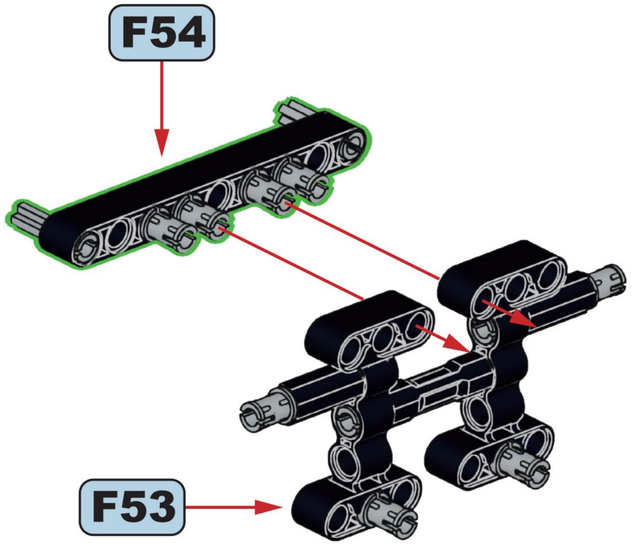

2x

F56

F50

F55

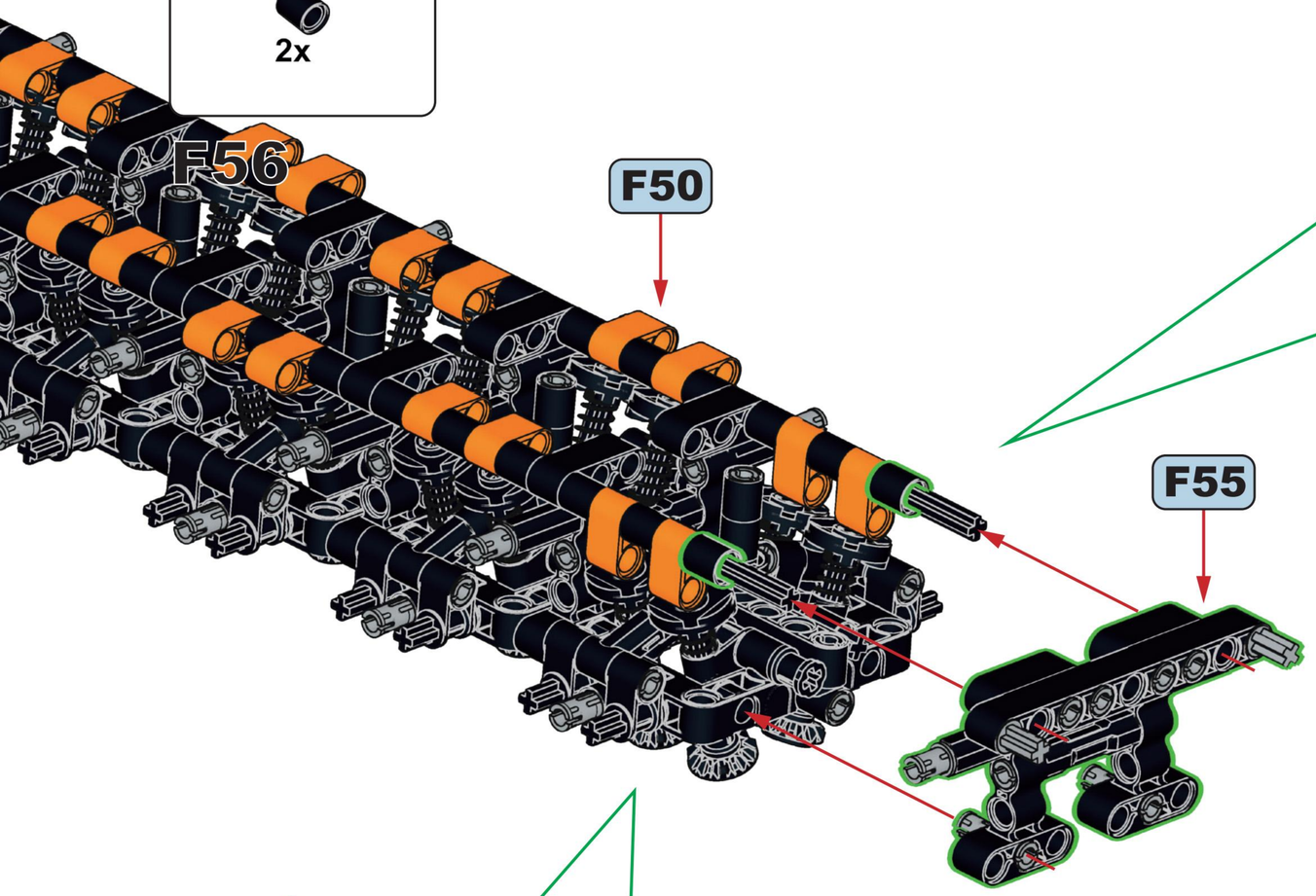

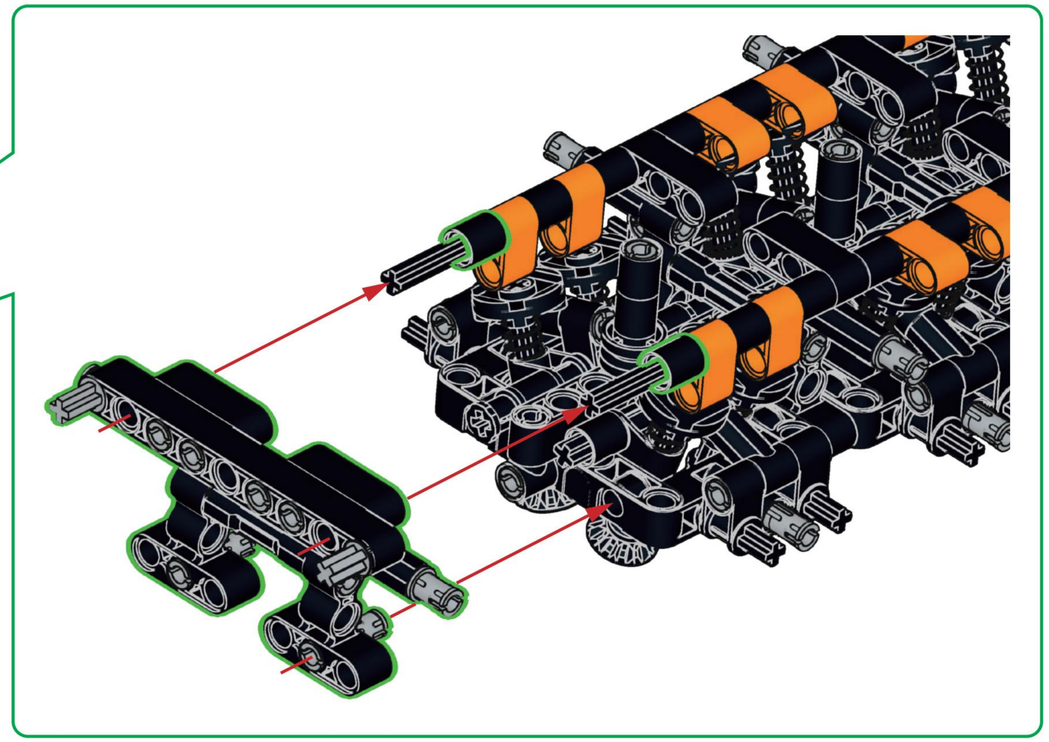

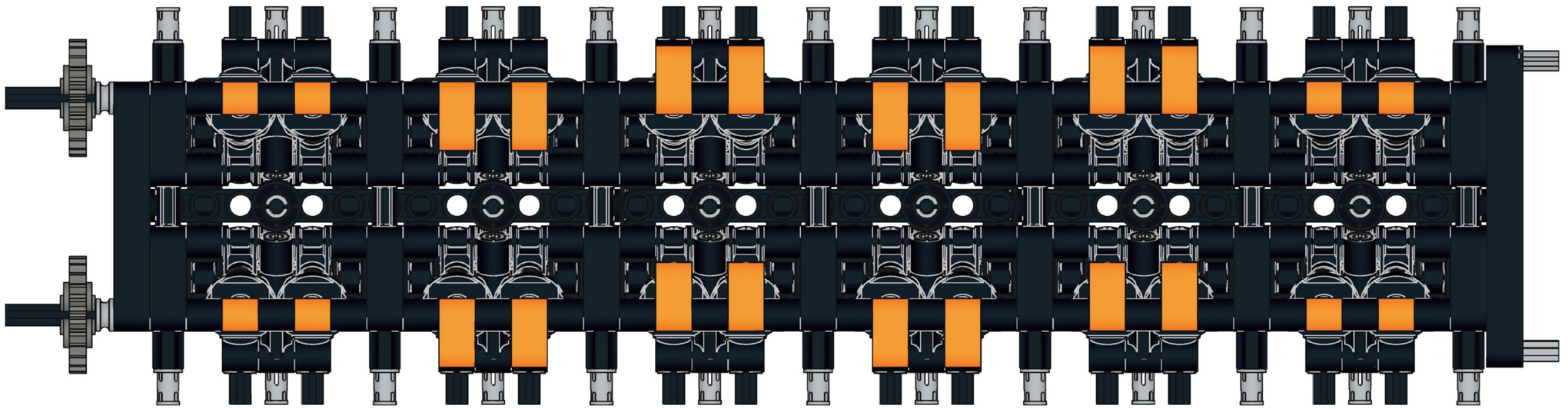

F57

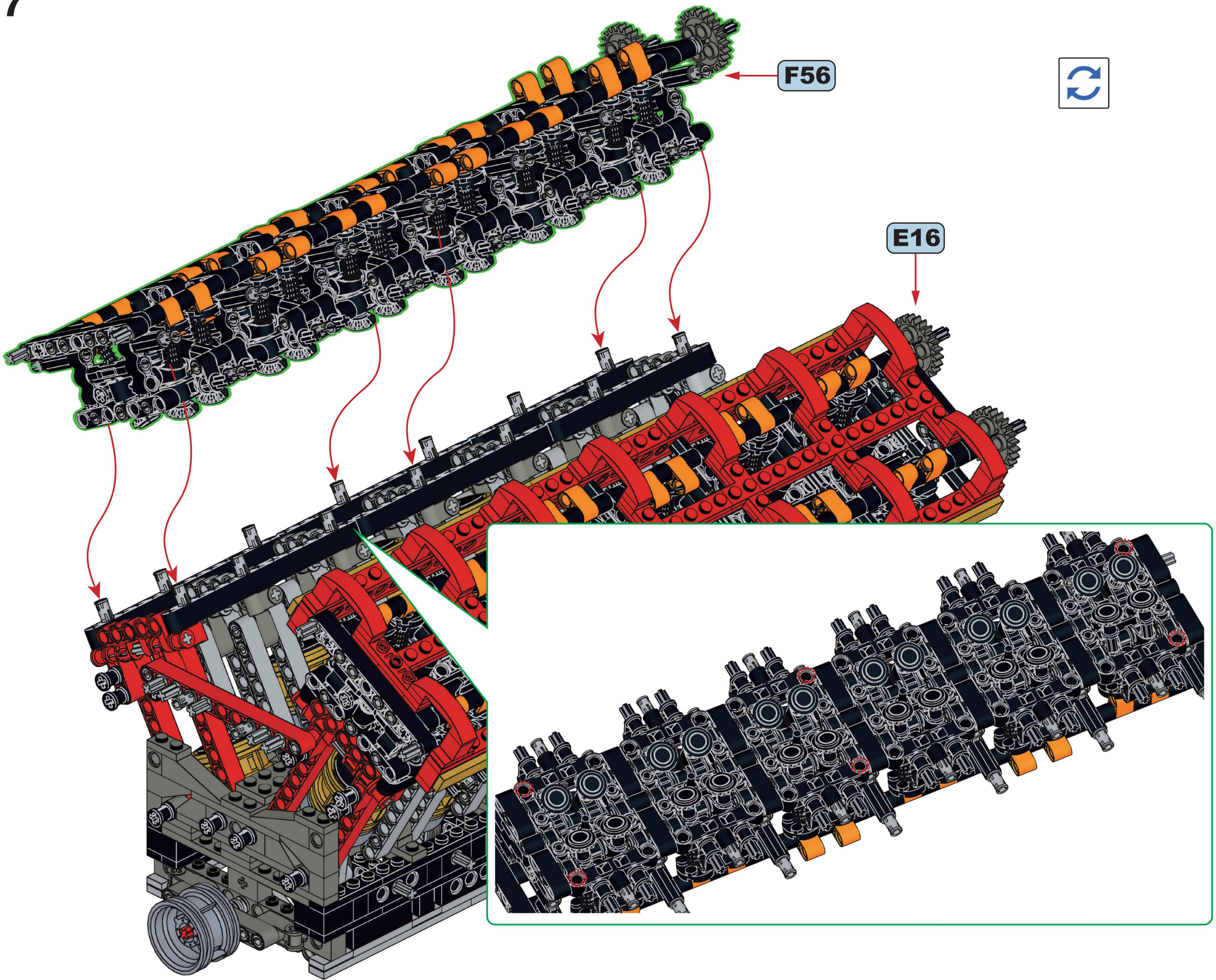

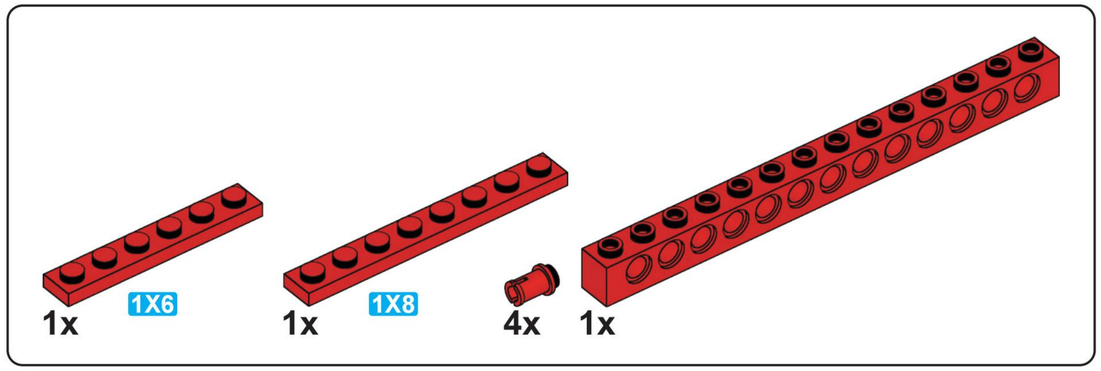

F58

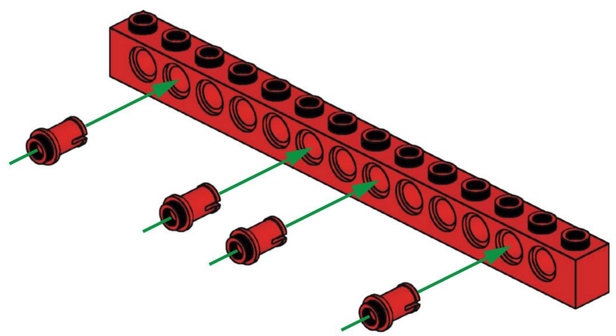

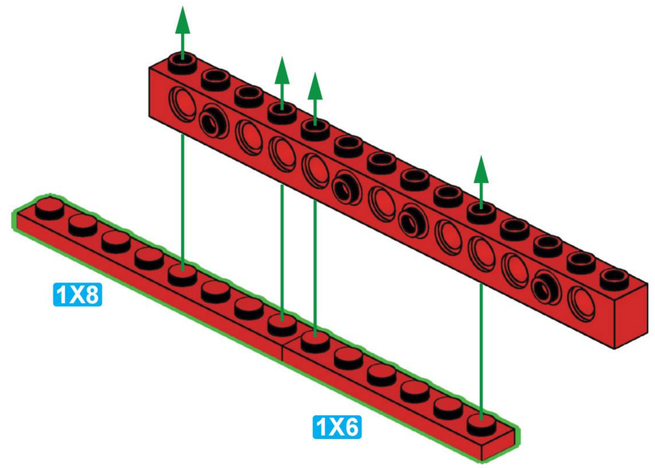

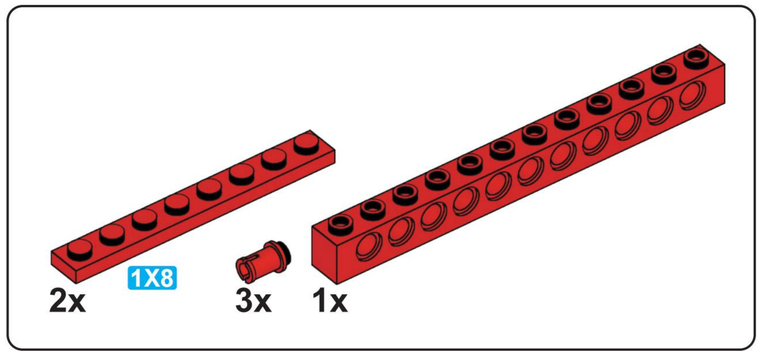

F59

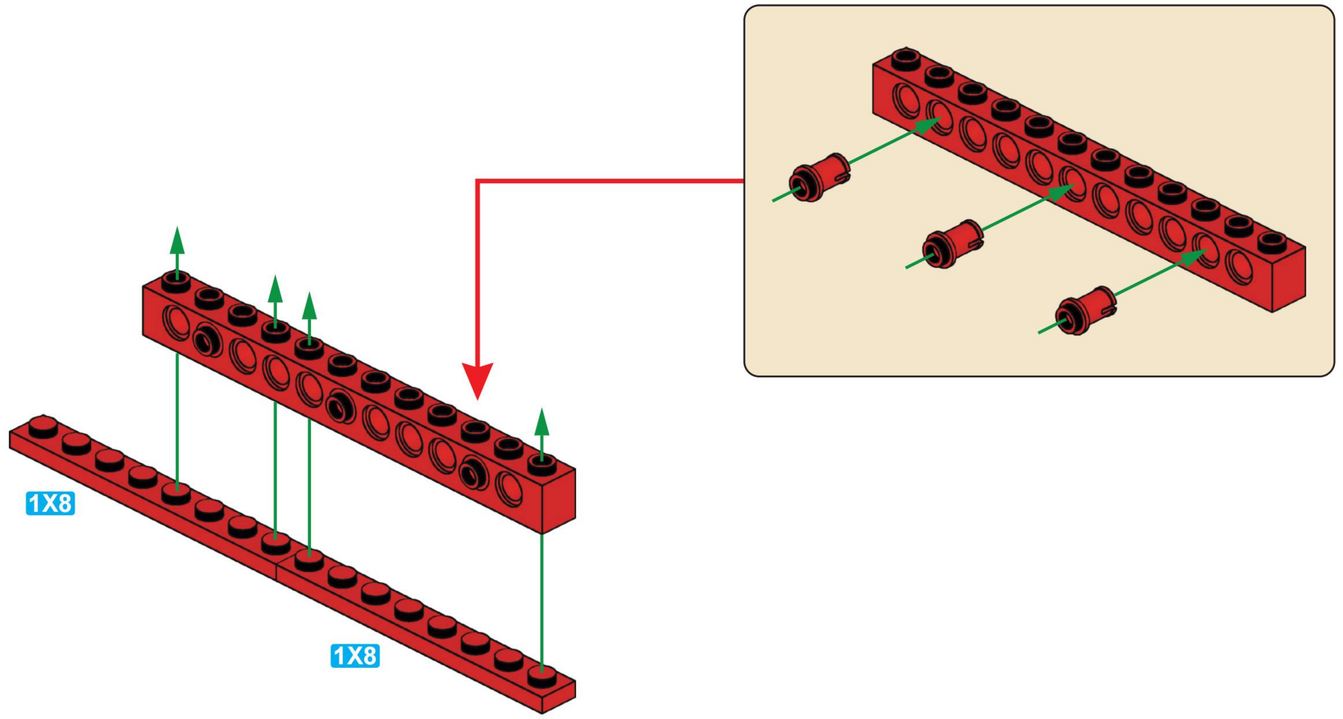

F60

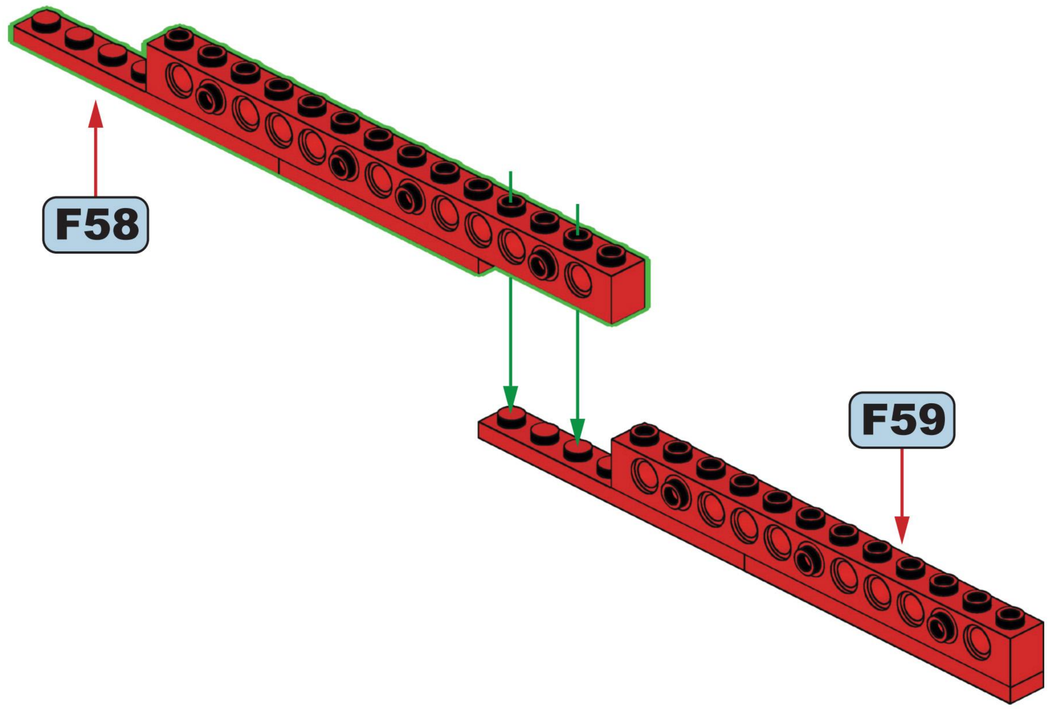

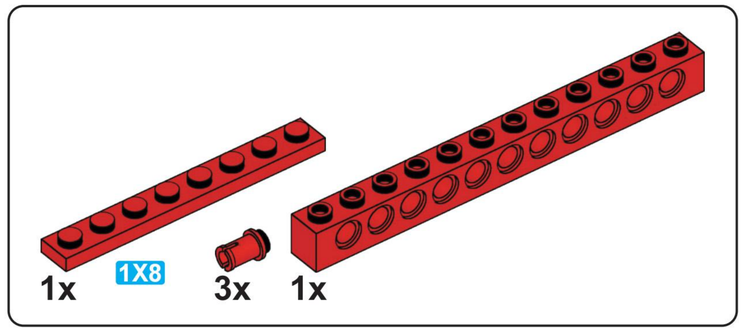

F61

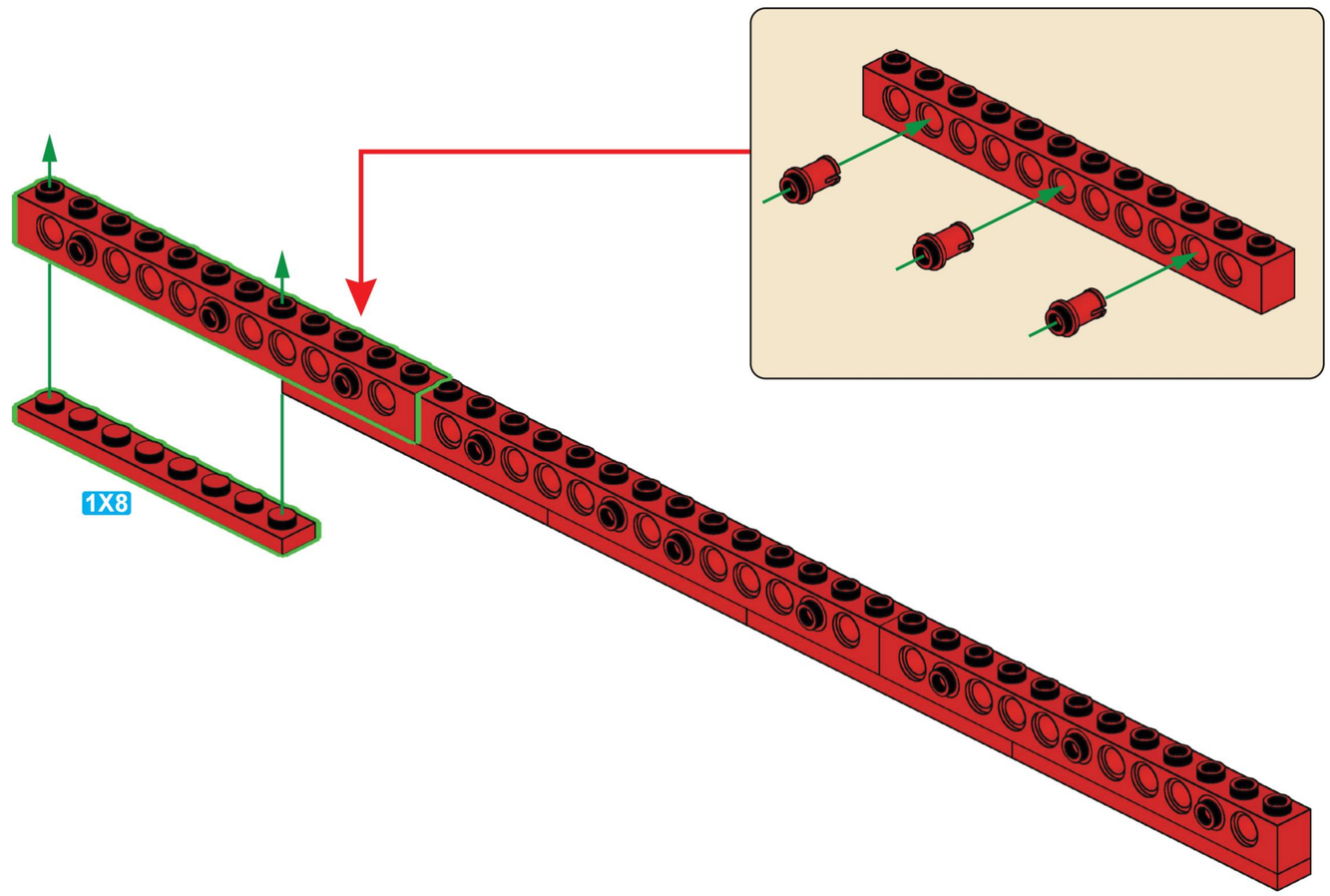

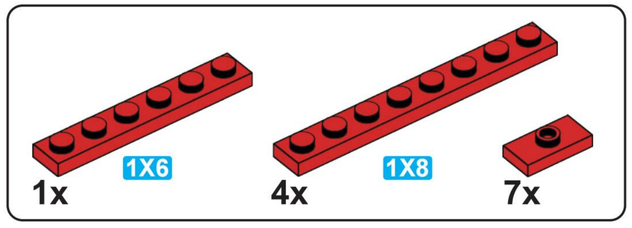

F62

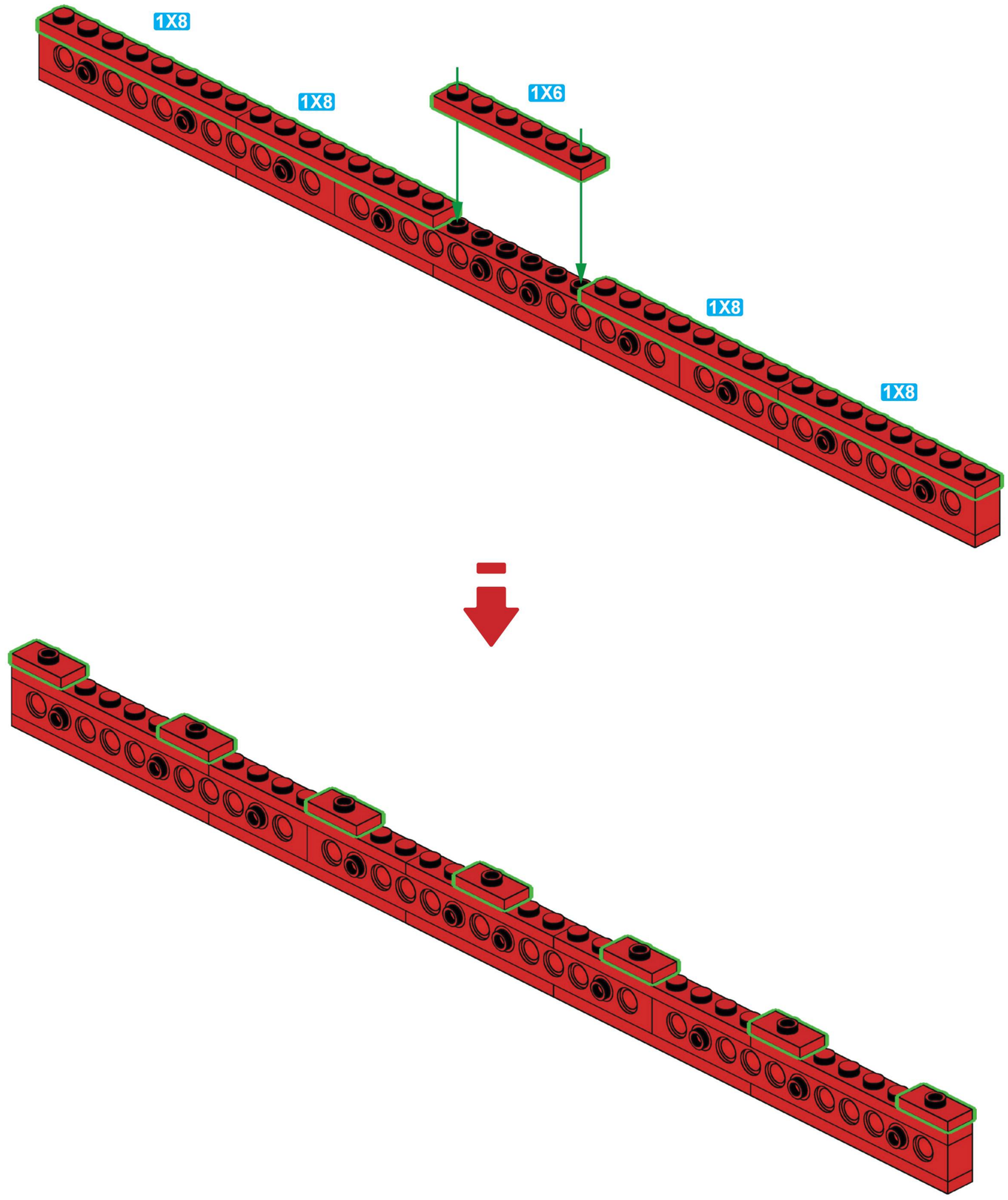

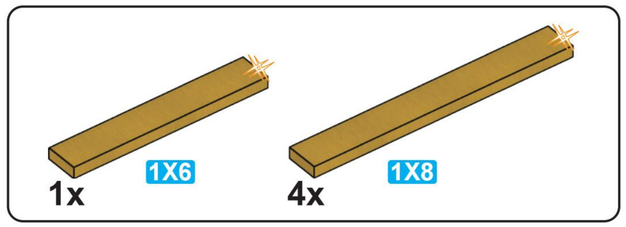

F63

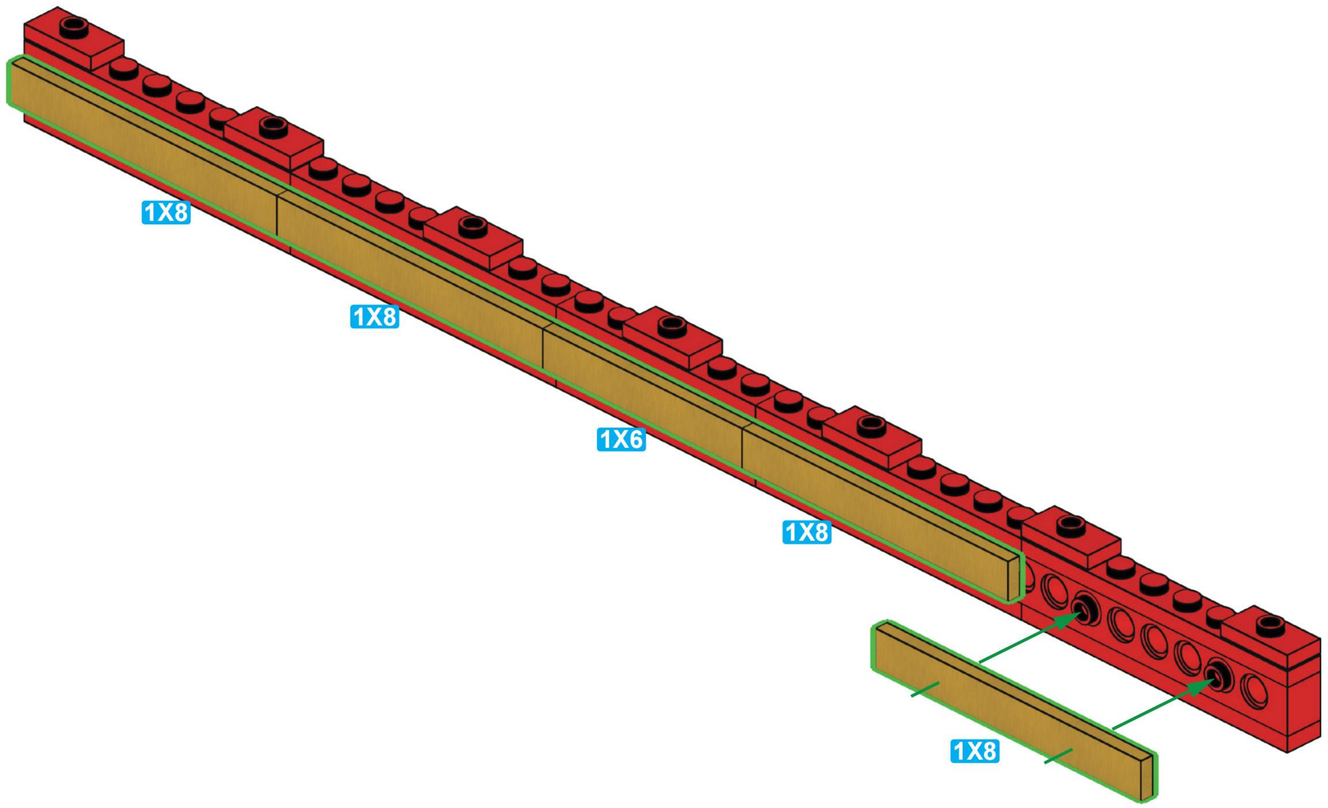

F64

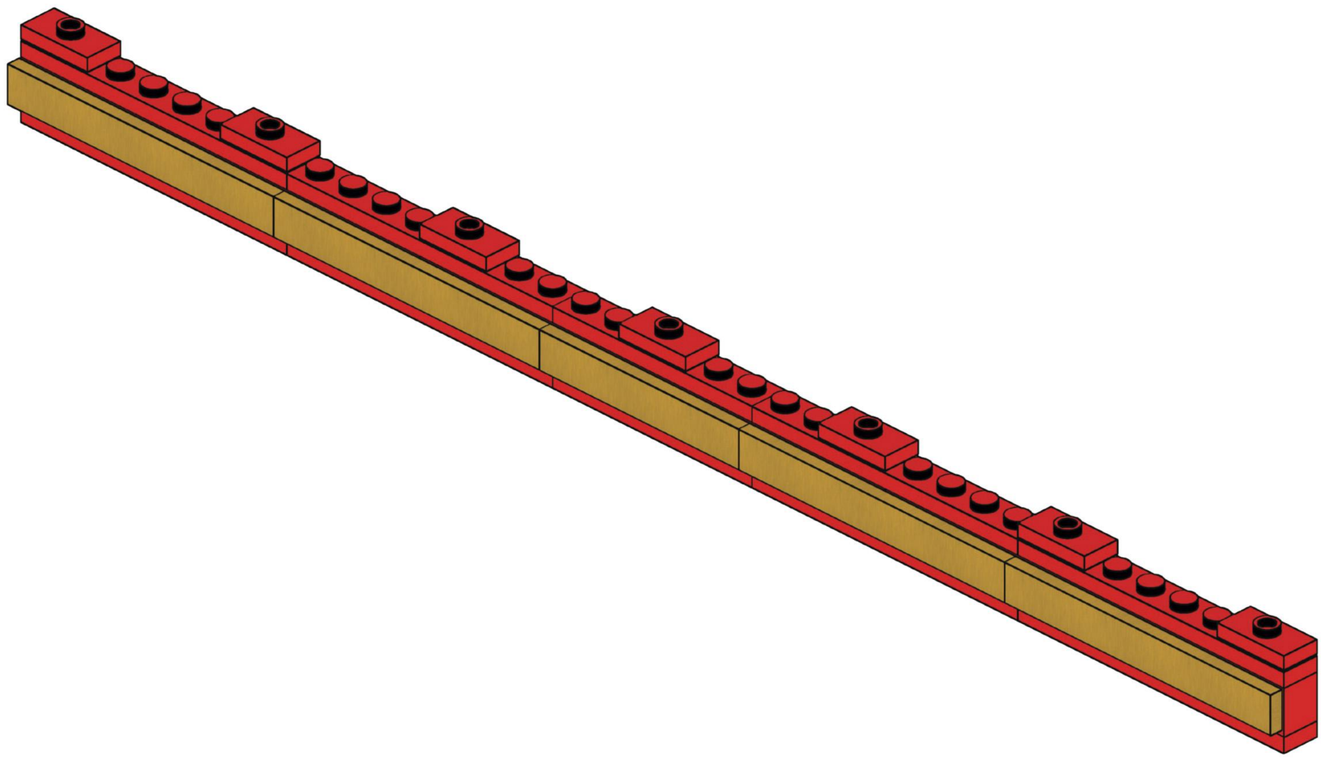

x2

F65

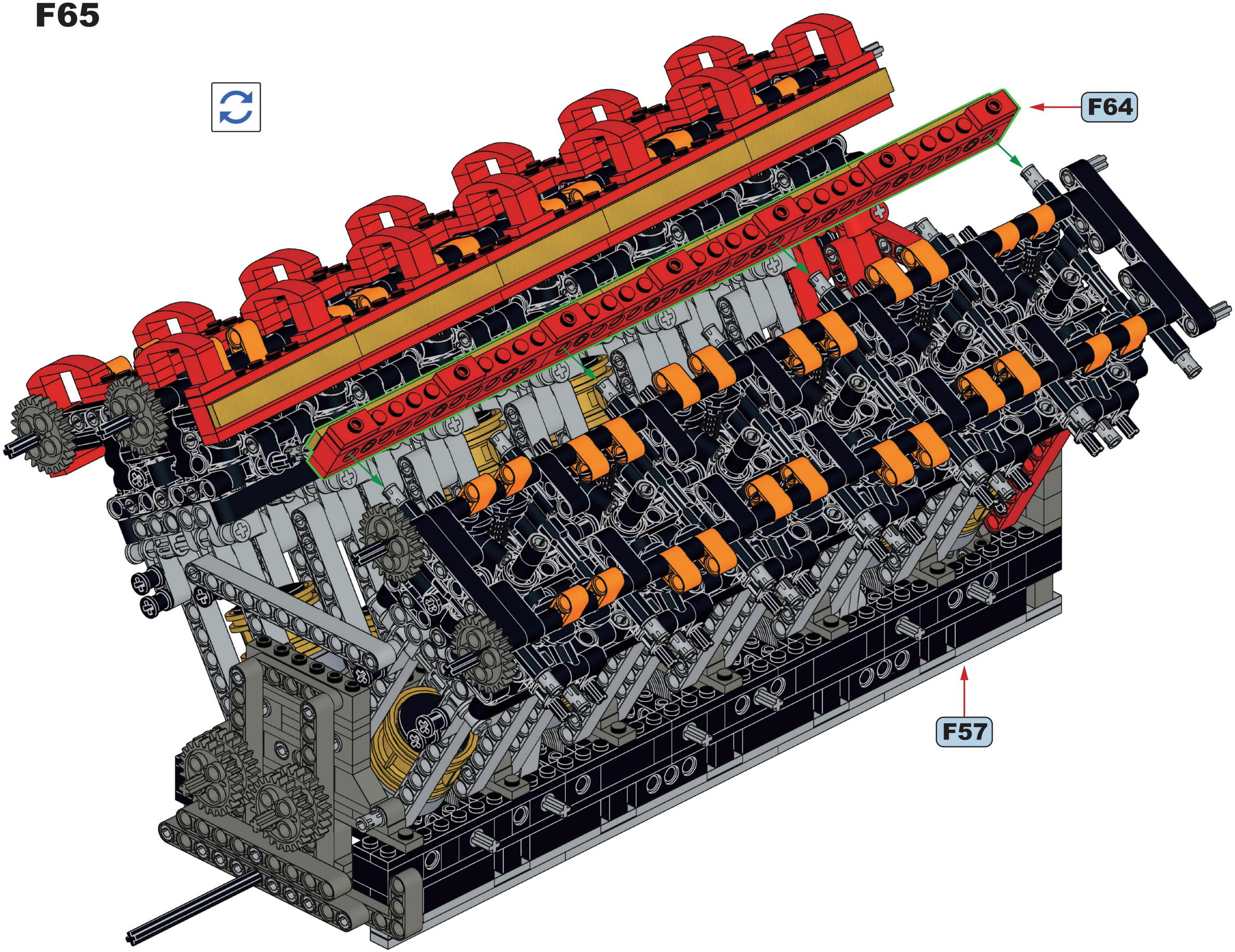

F66

F64

F65

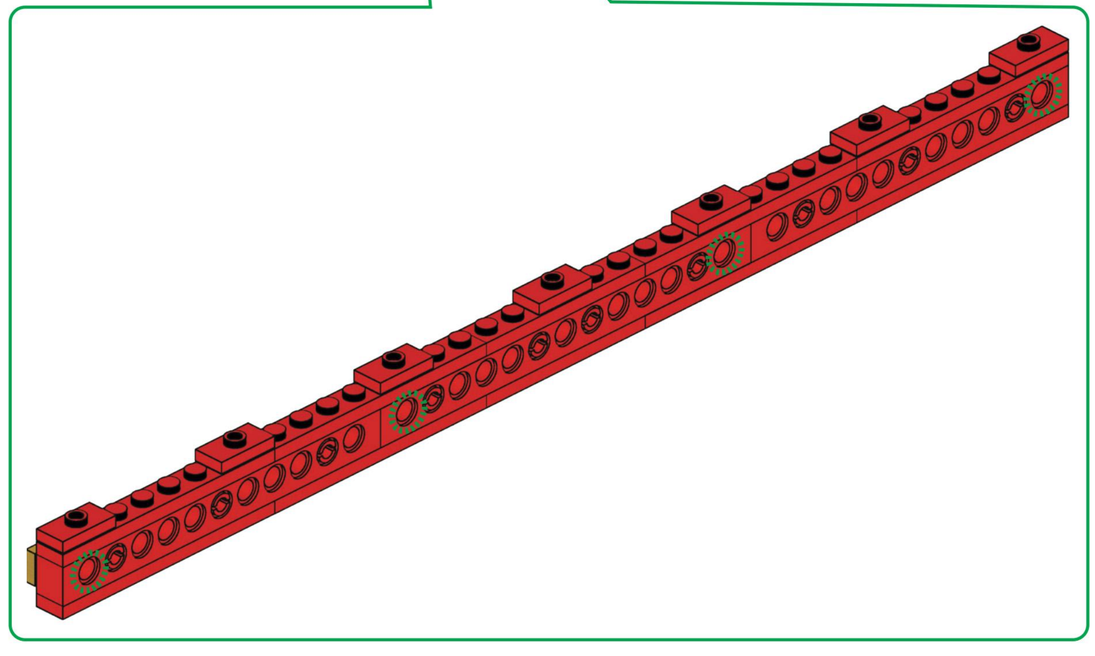

7

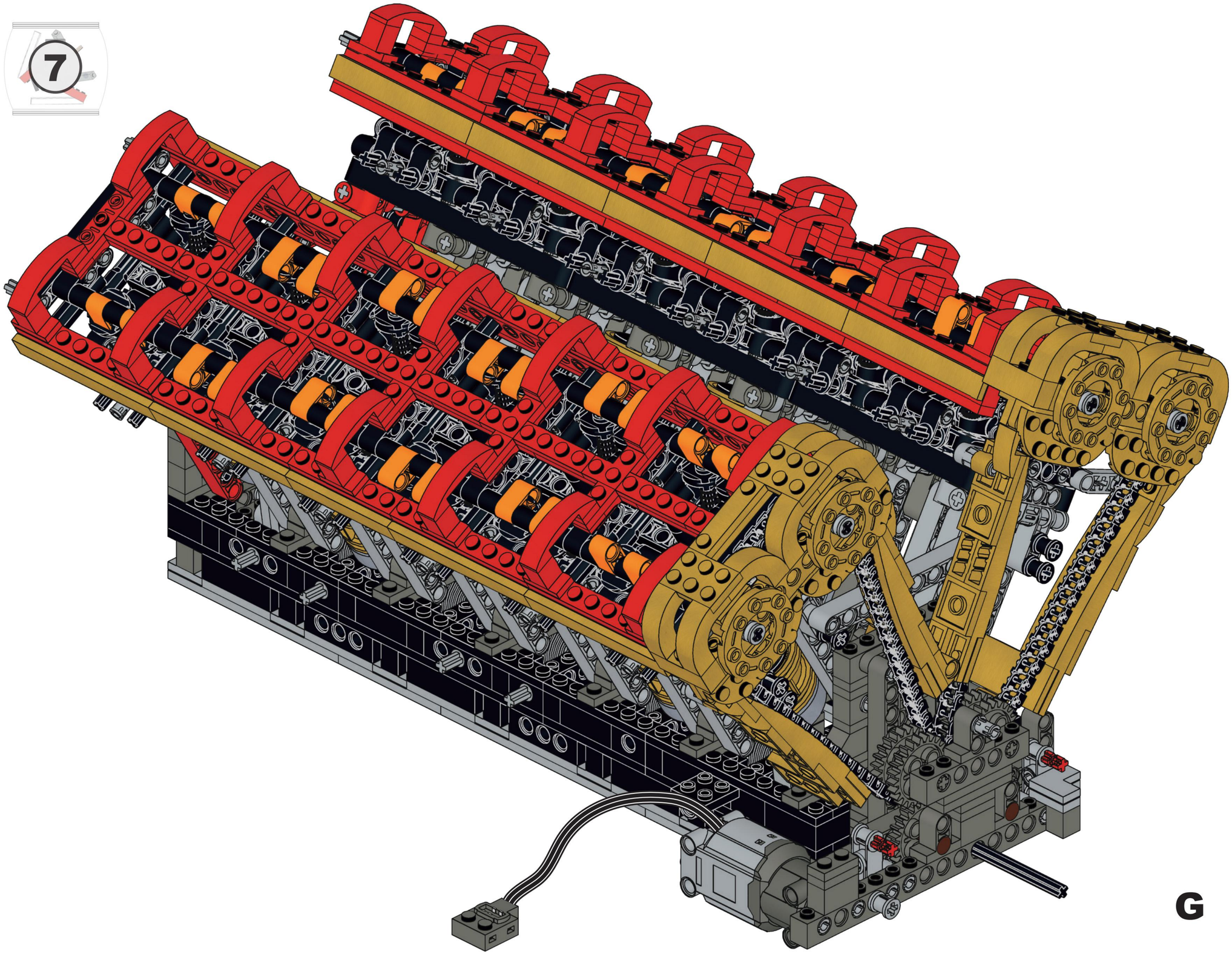

G

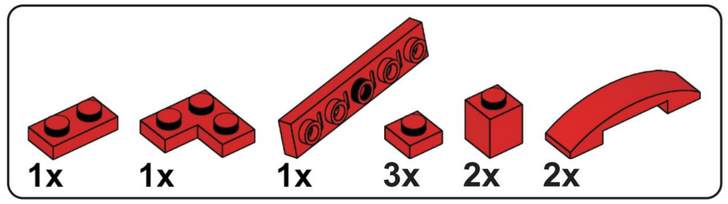

G1

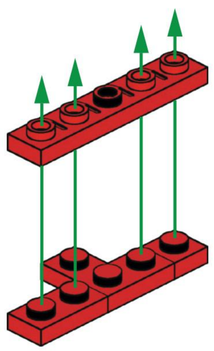

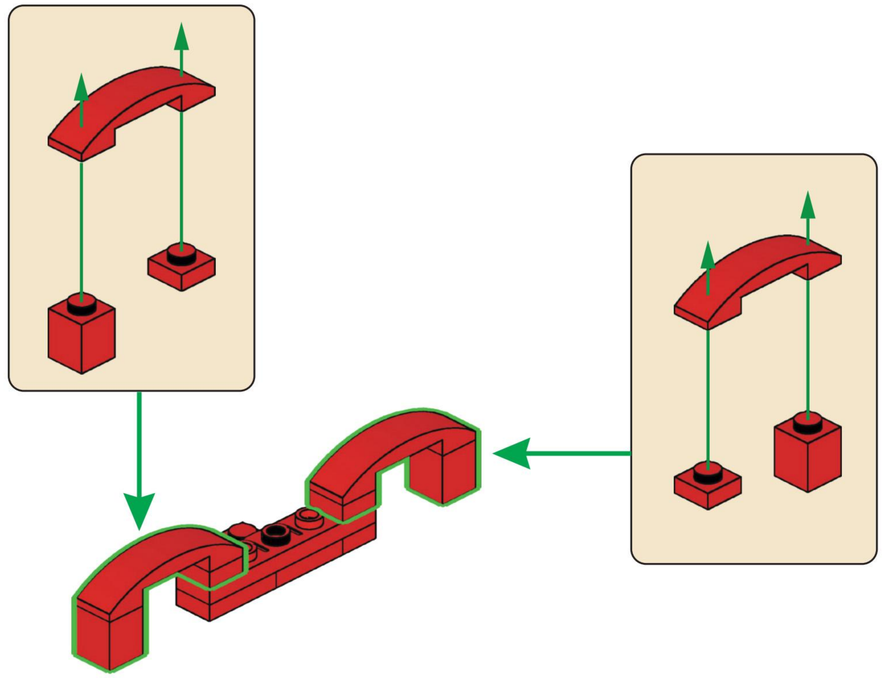

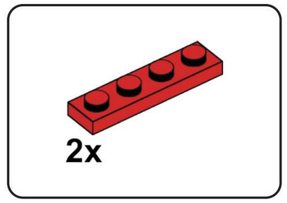

G2

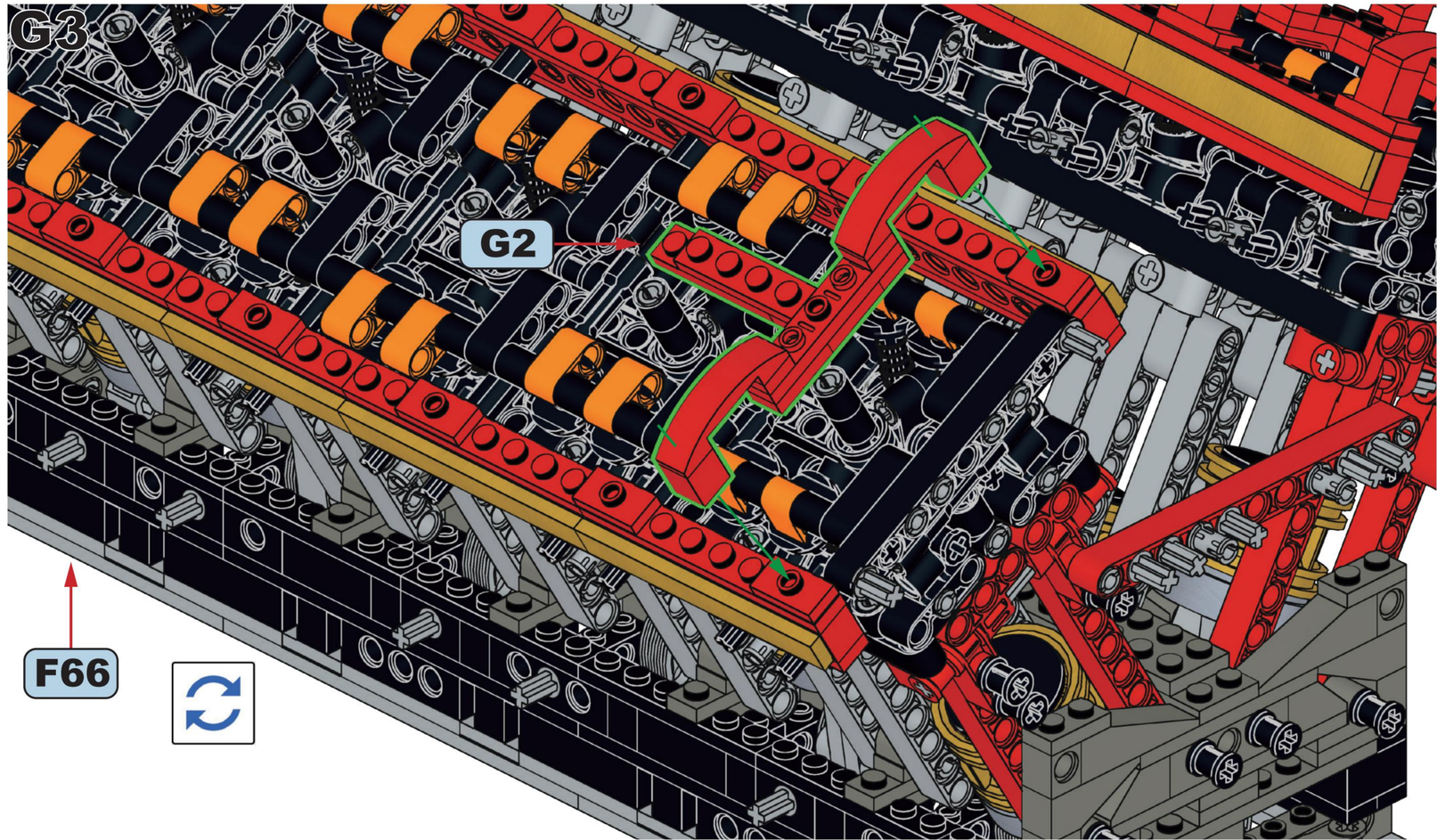

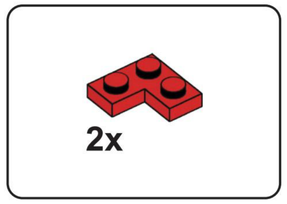

G4

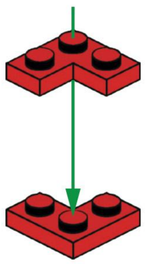

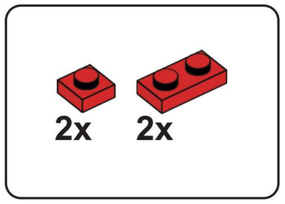

G5

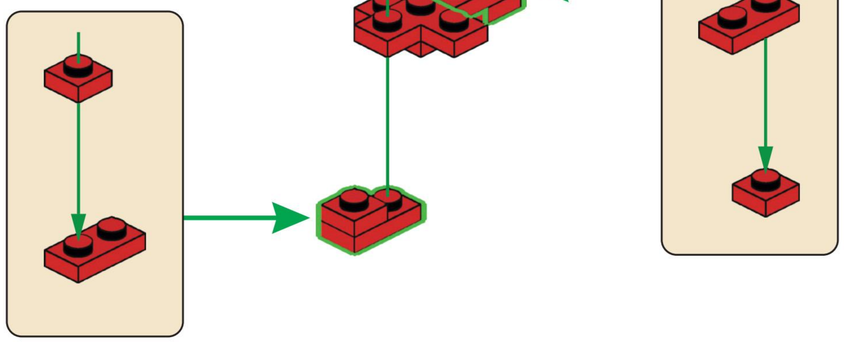

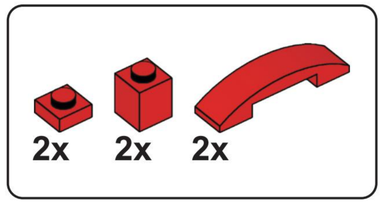

G6

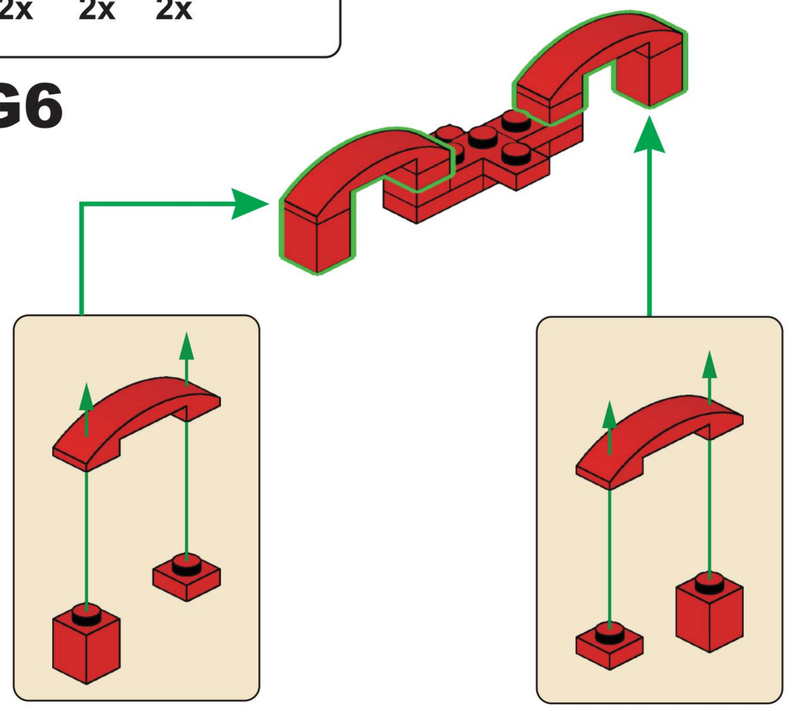

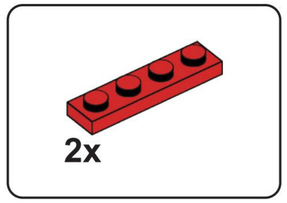

G7

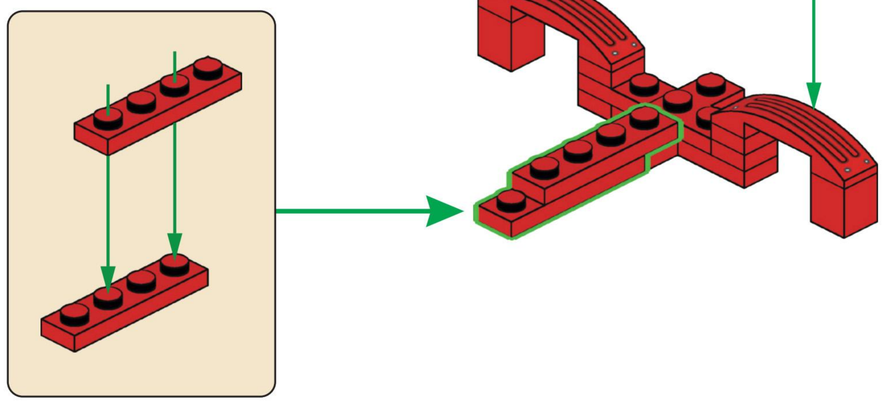

G8

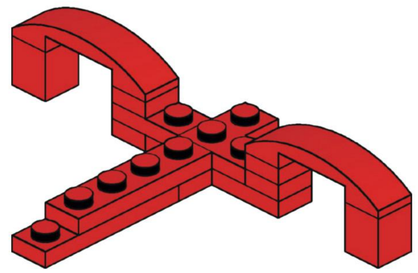

x5

G9

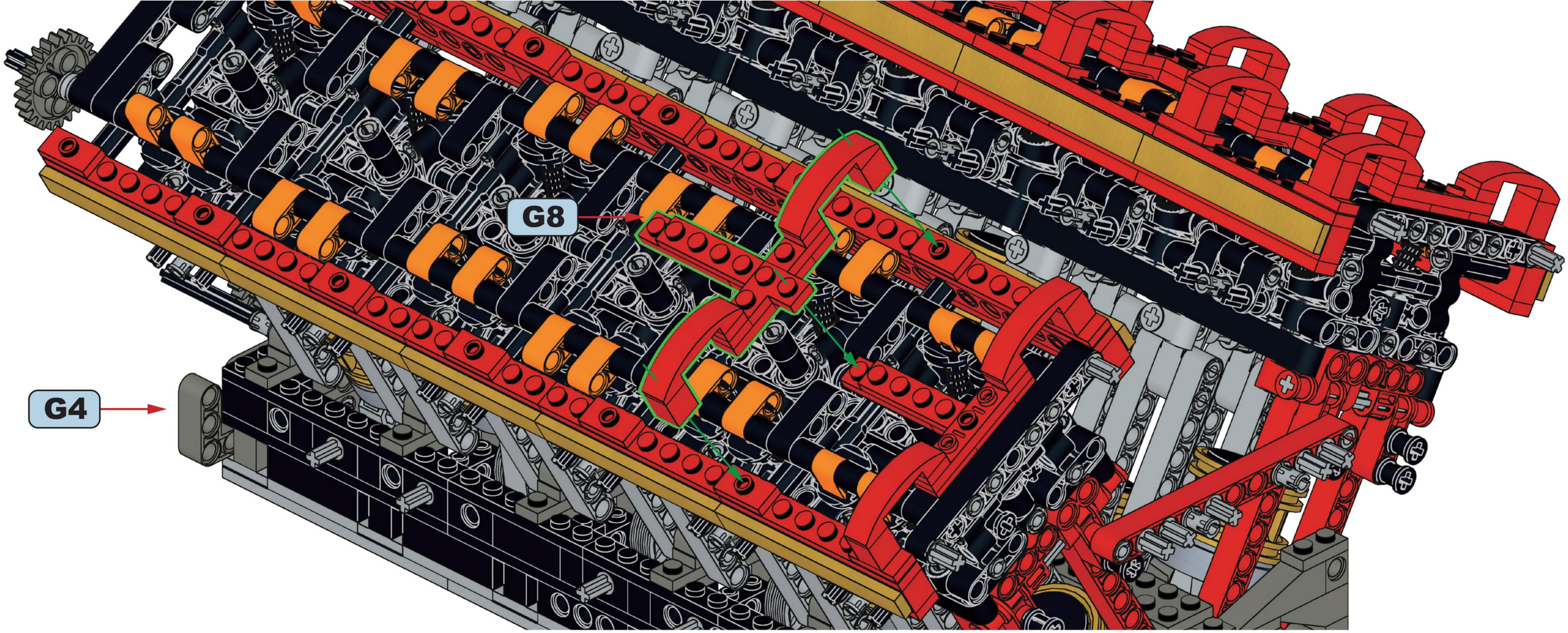

G10

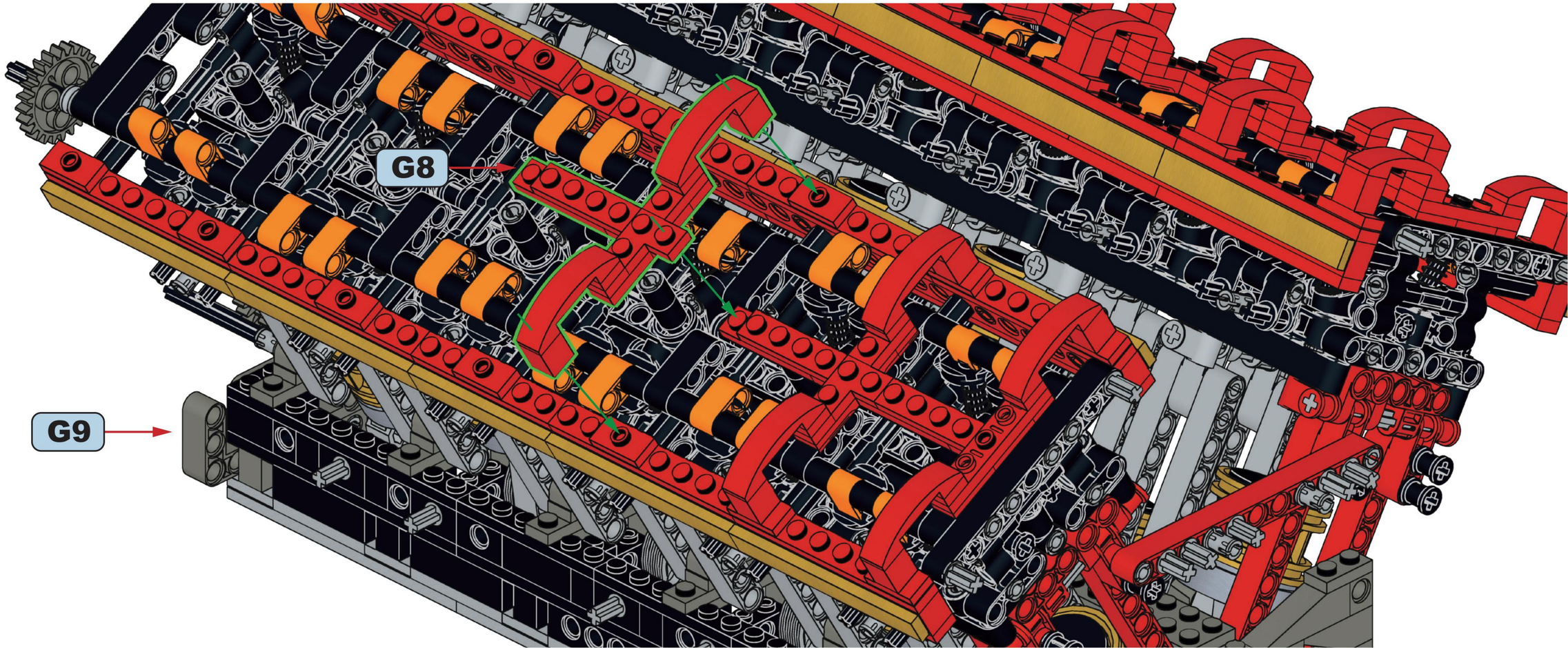

G11

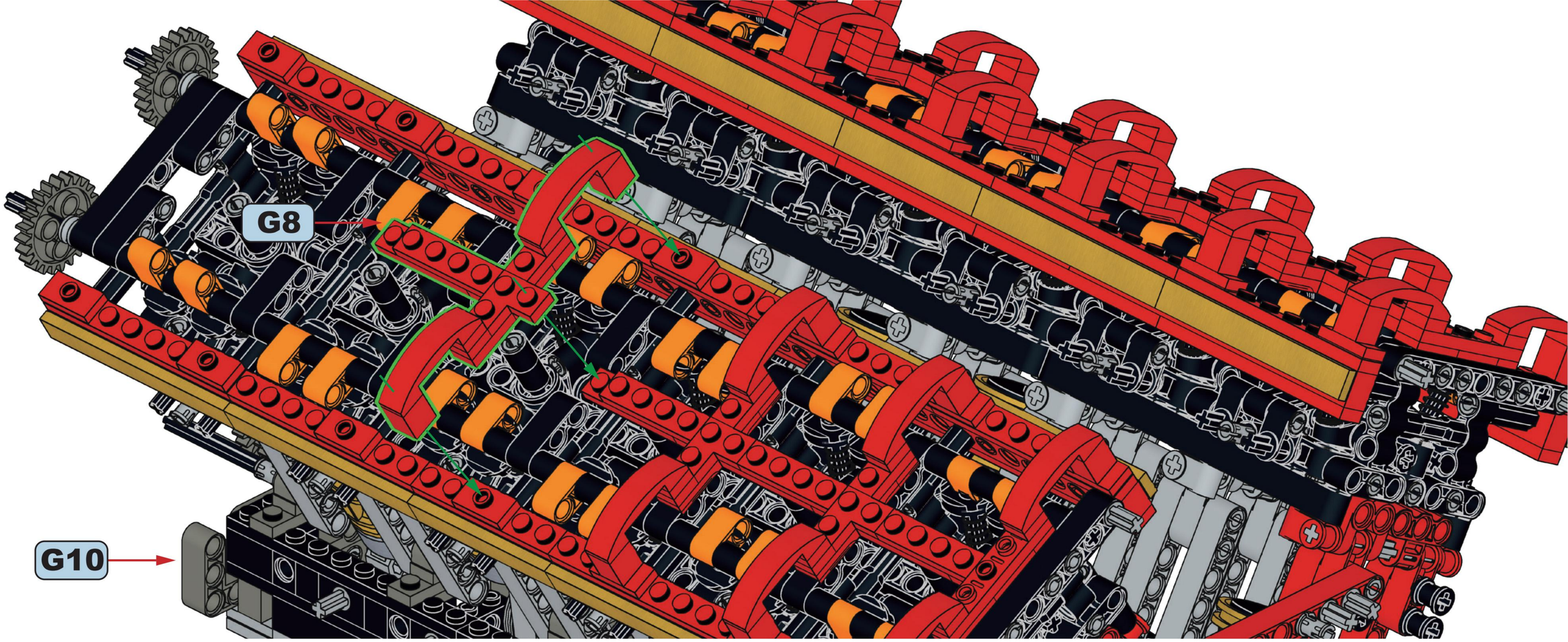

G12

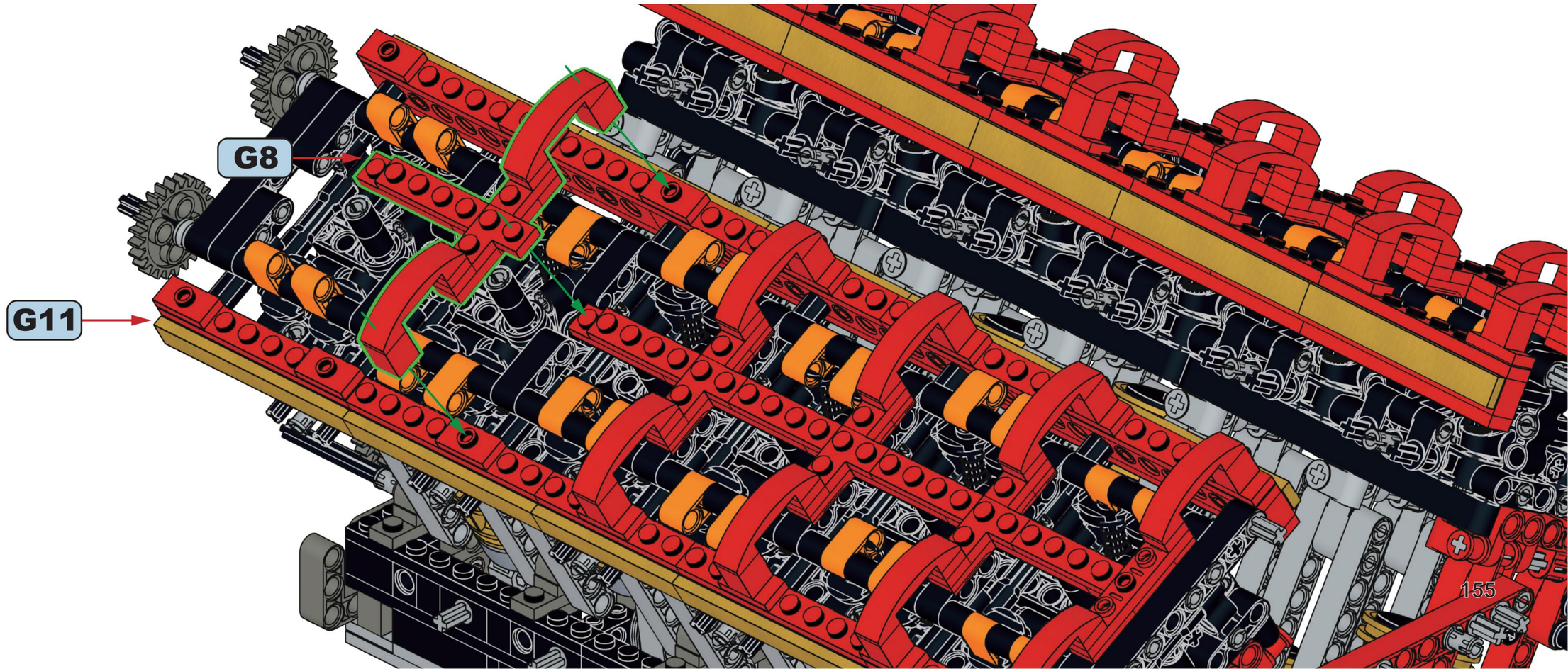

G13

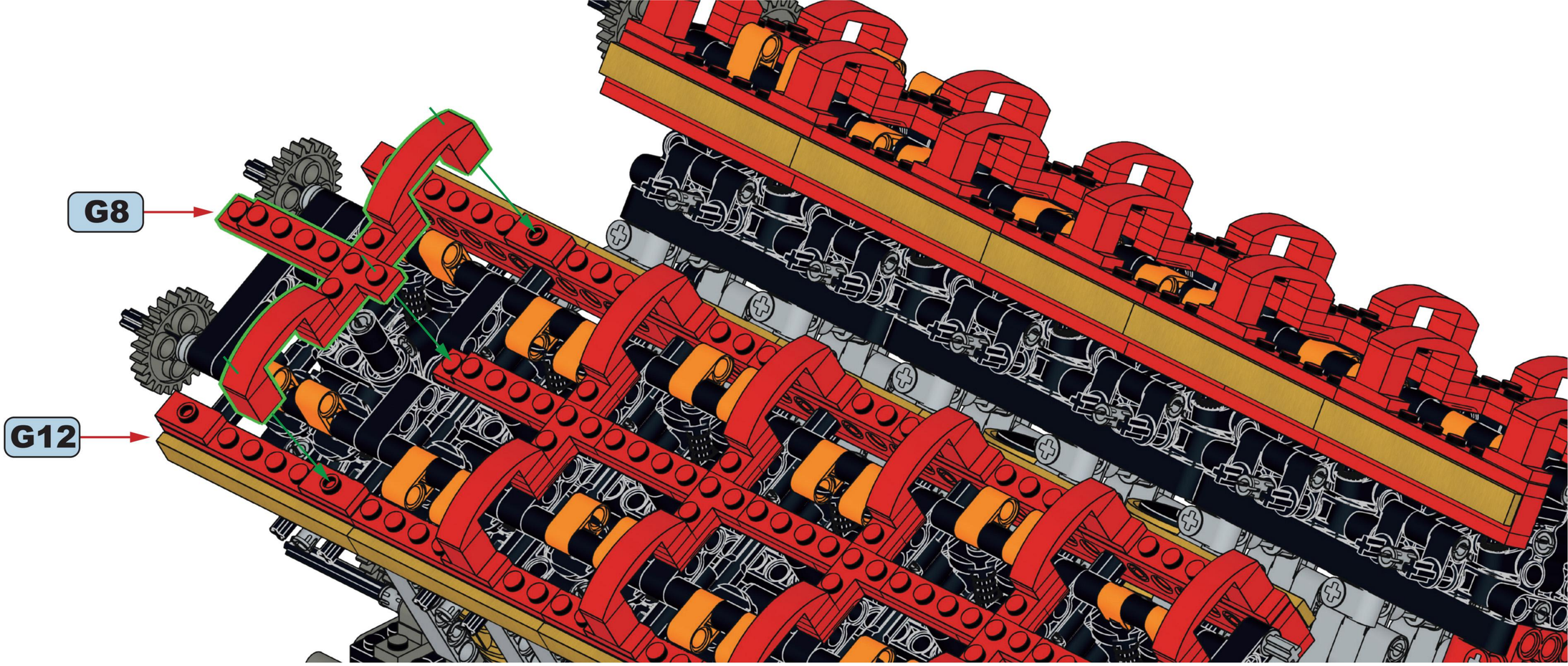

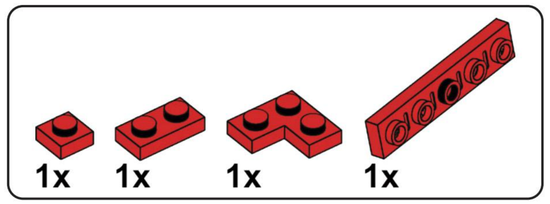

G14

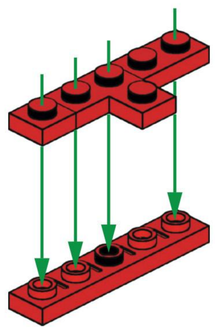

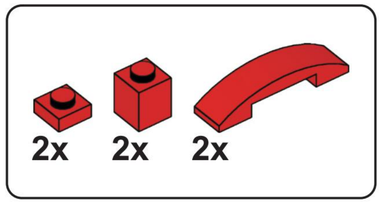

G15

G16

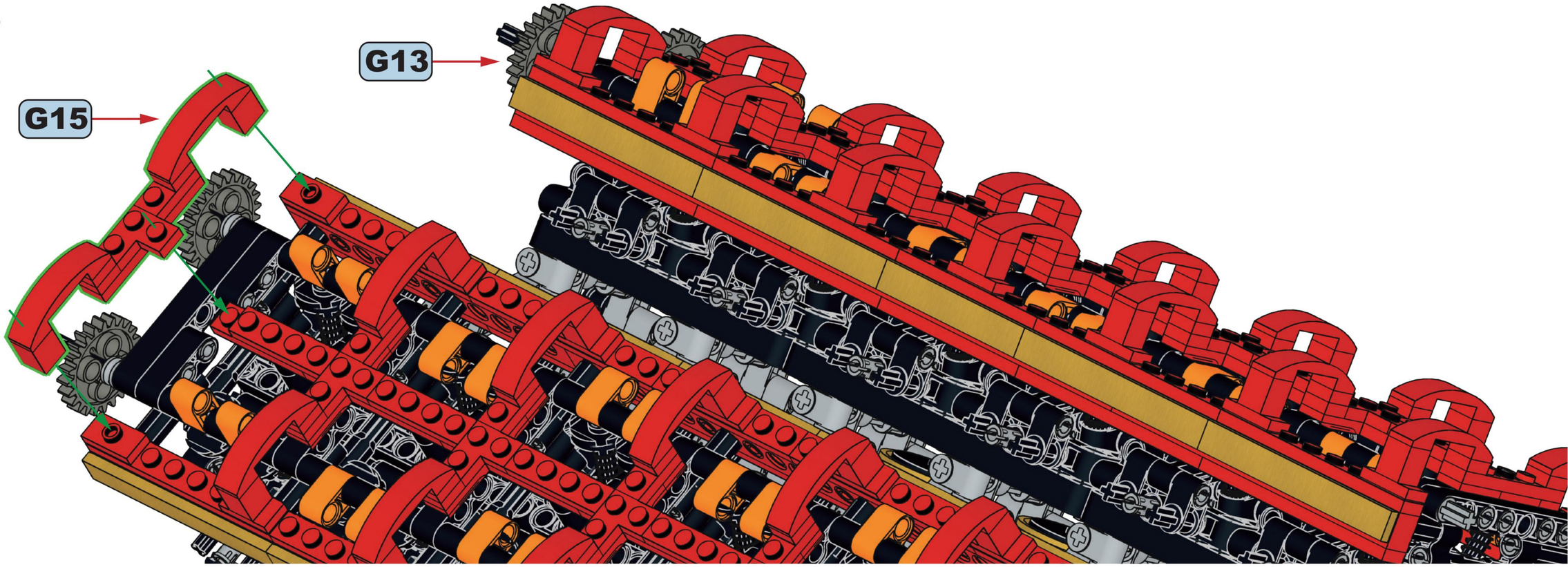

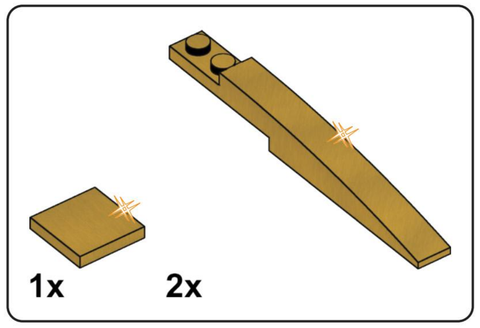

G17

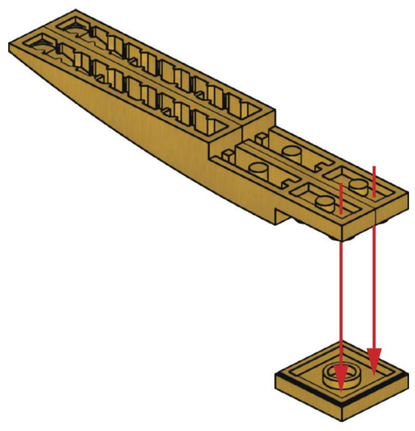

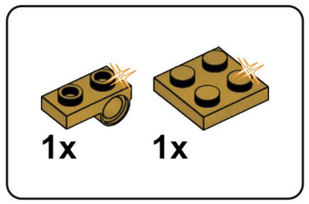

G18

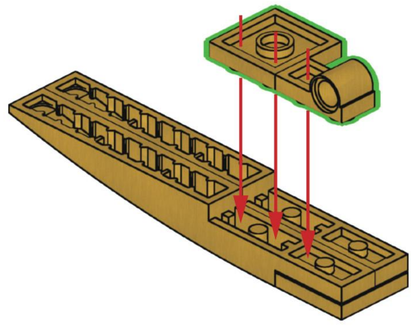

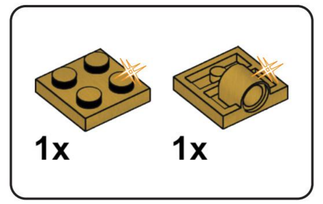

G19

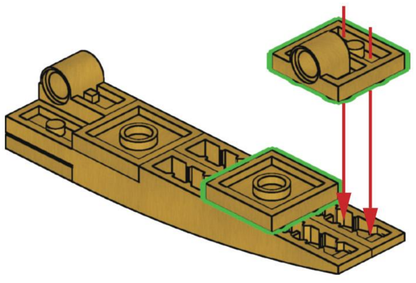

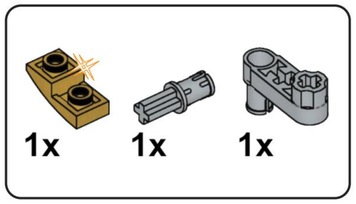

G20

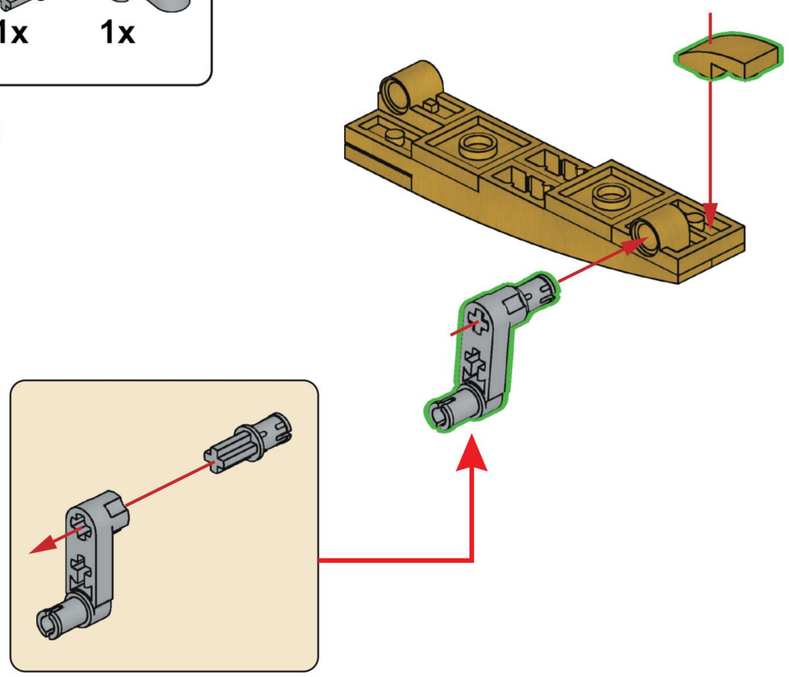

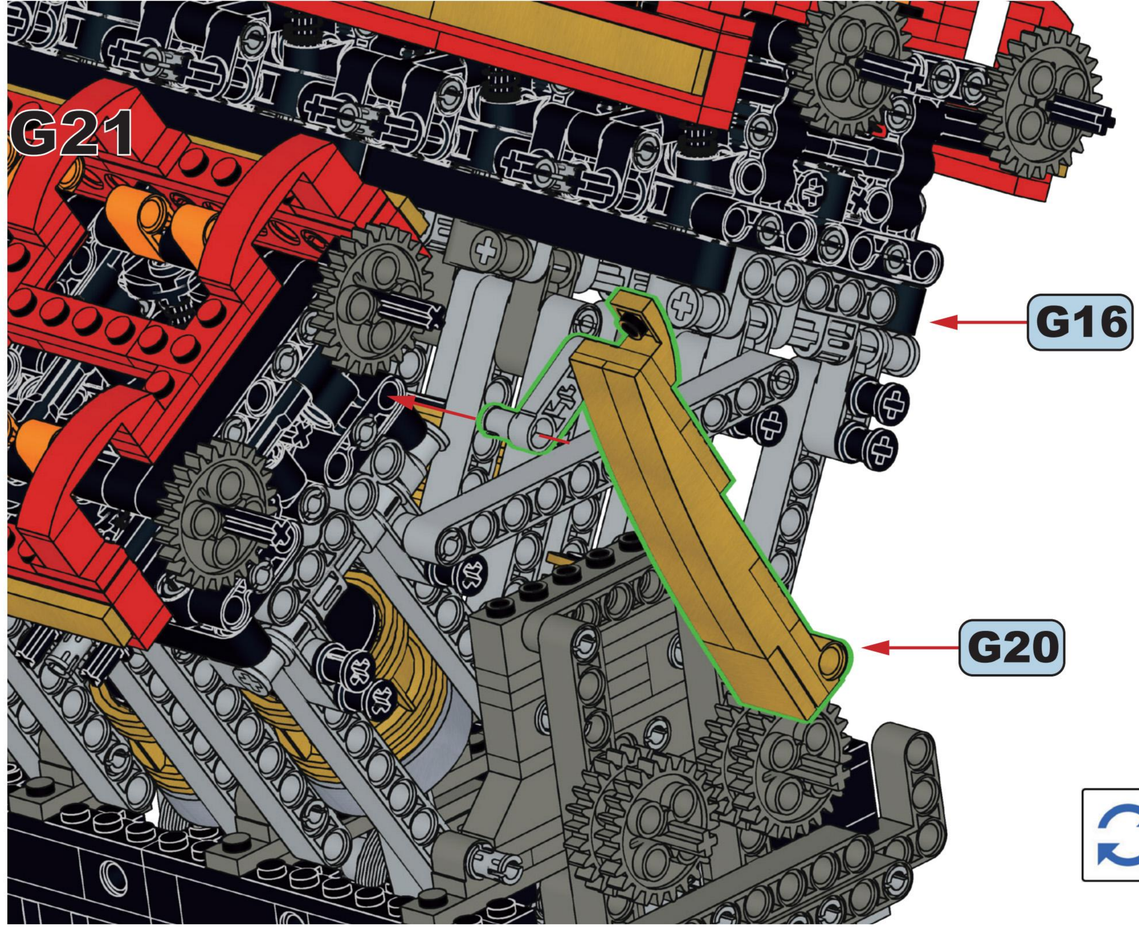

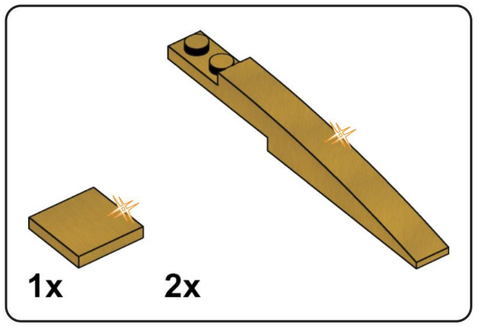

G22

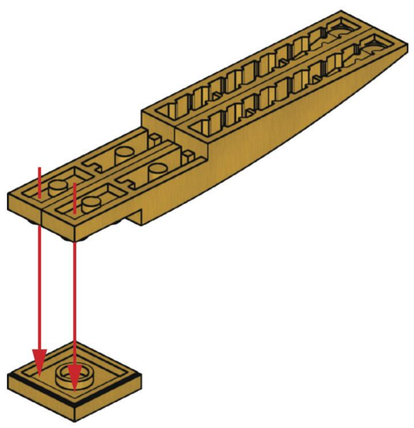

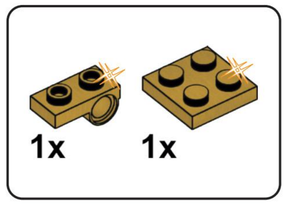

G23

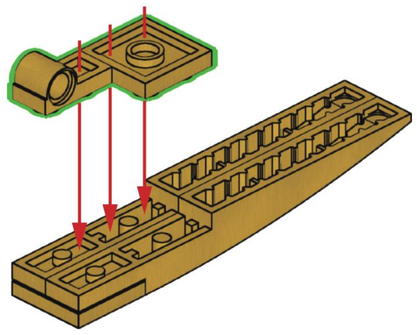

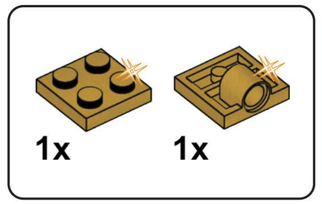

G24

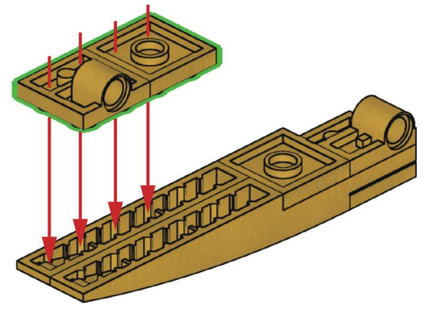

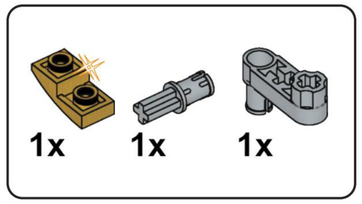

G25

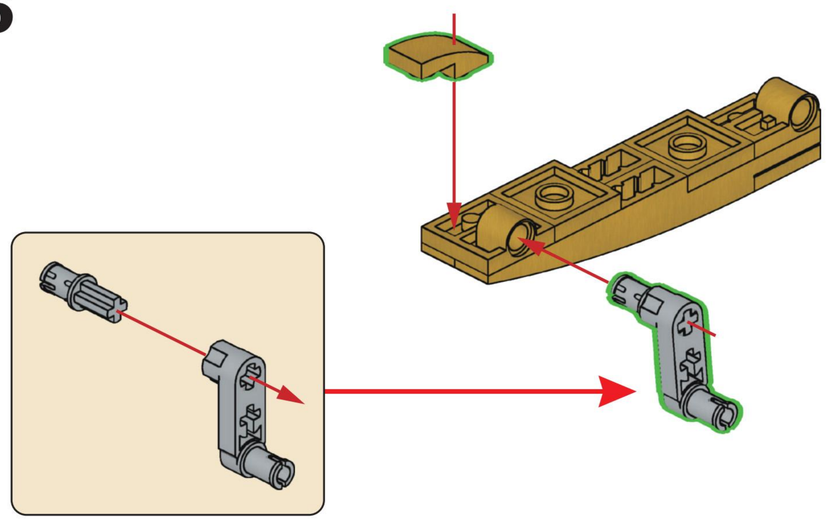

G26

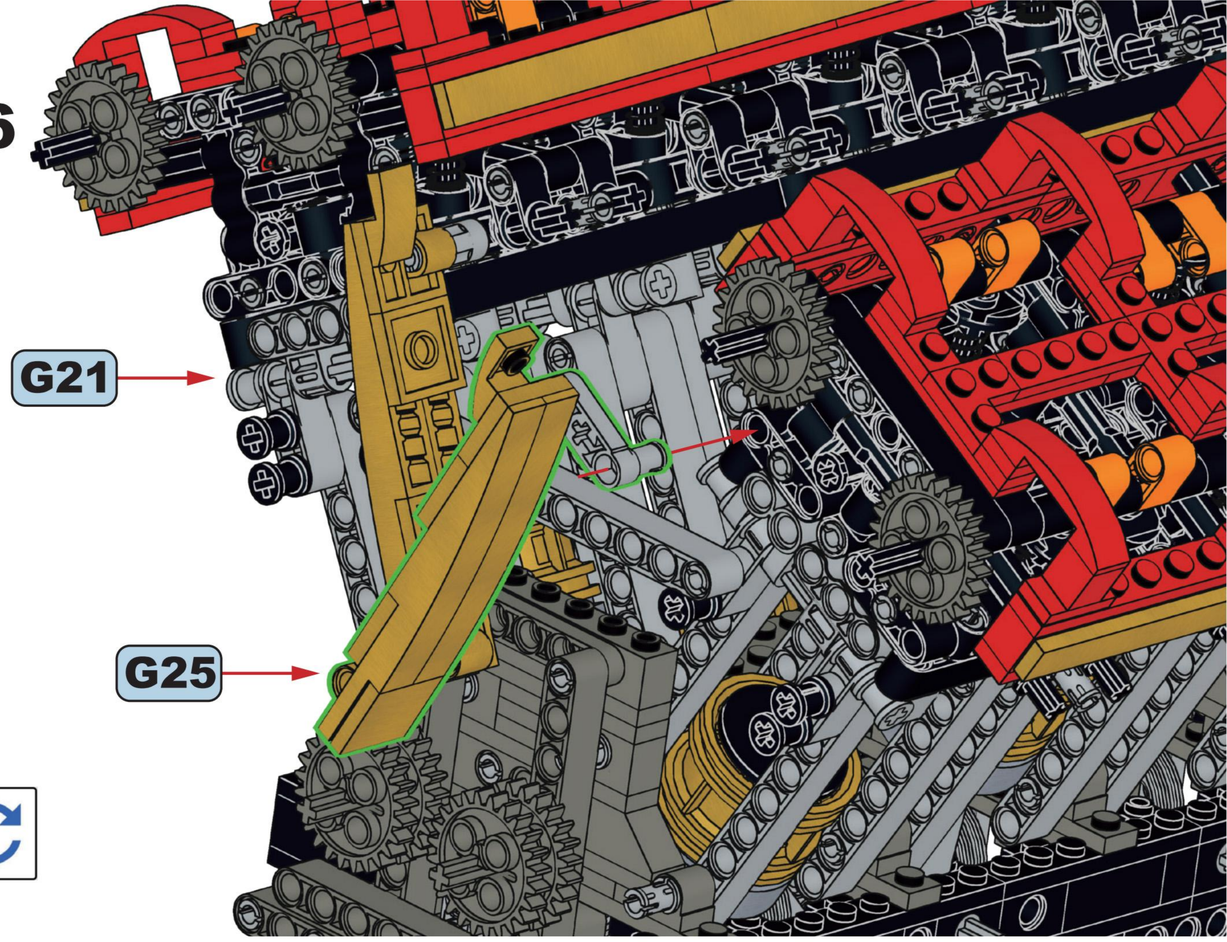

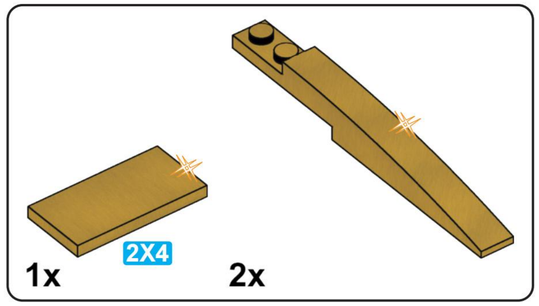

G27

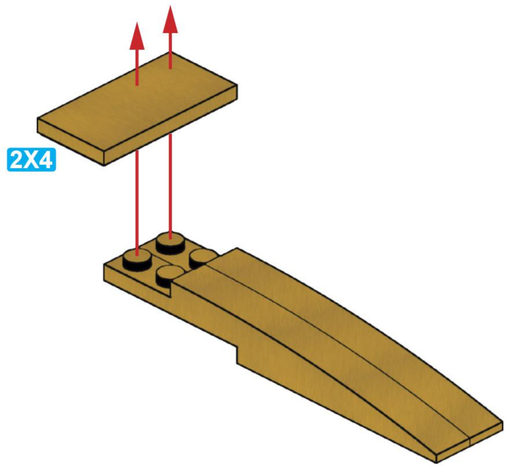

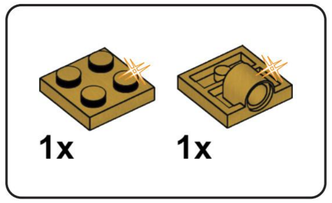

G28

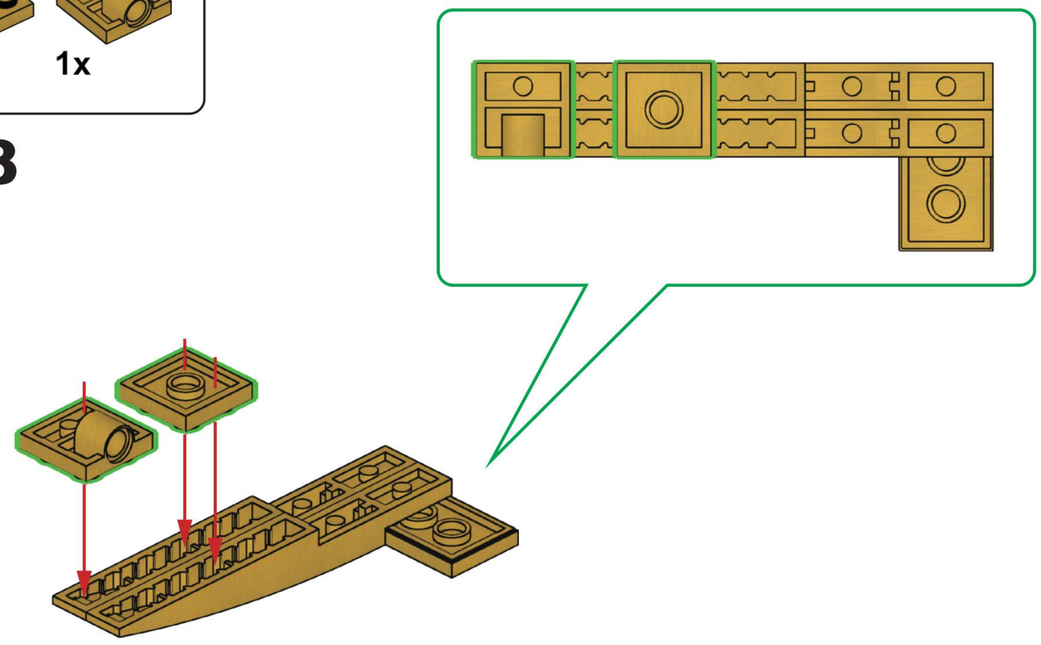

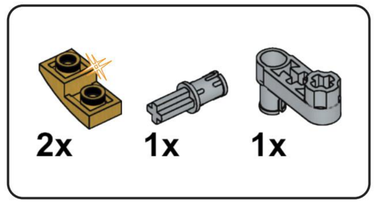

G29

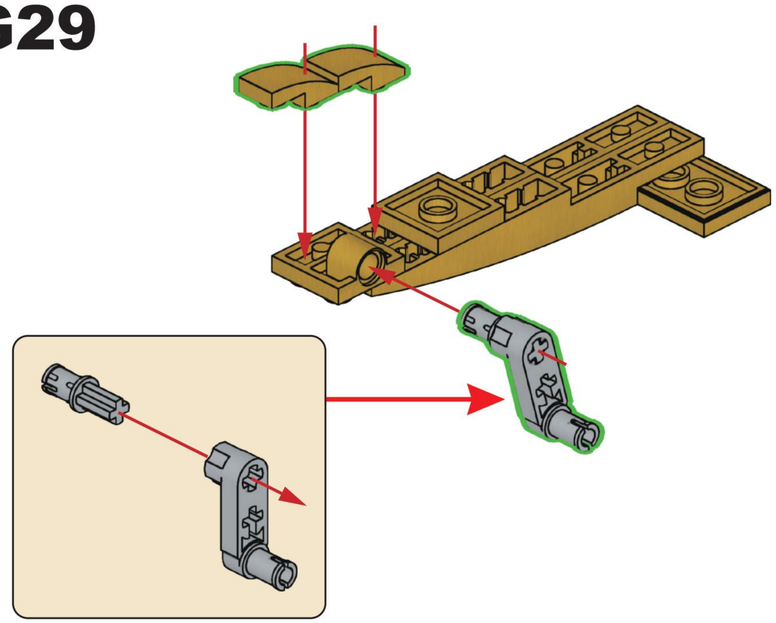

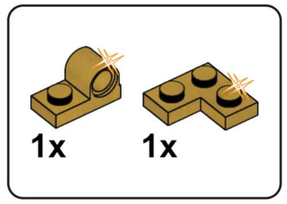

G30

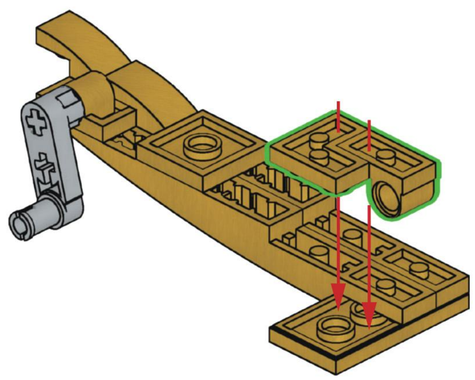

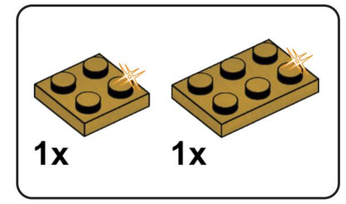

G31

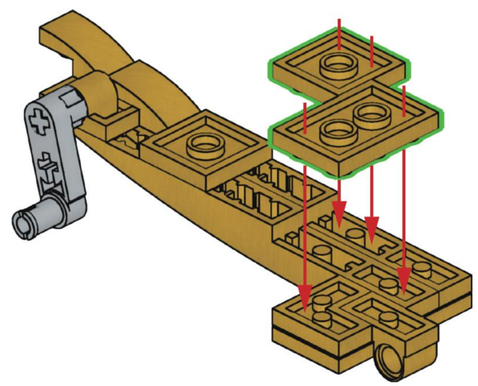

G32

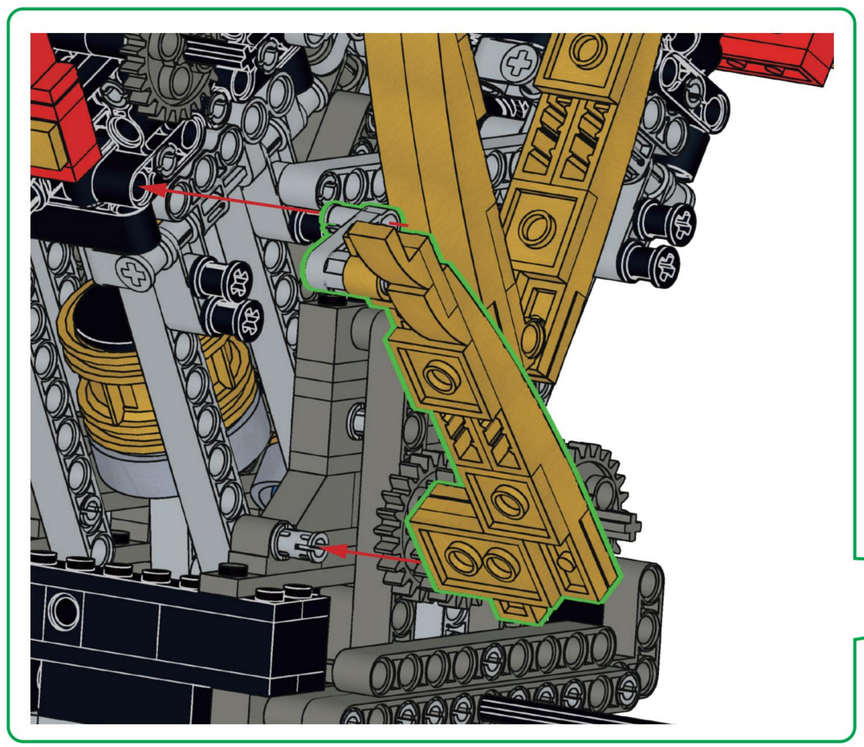

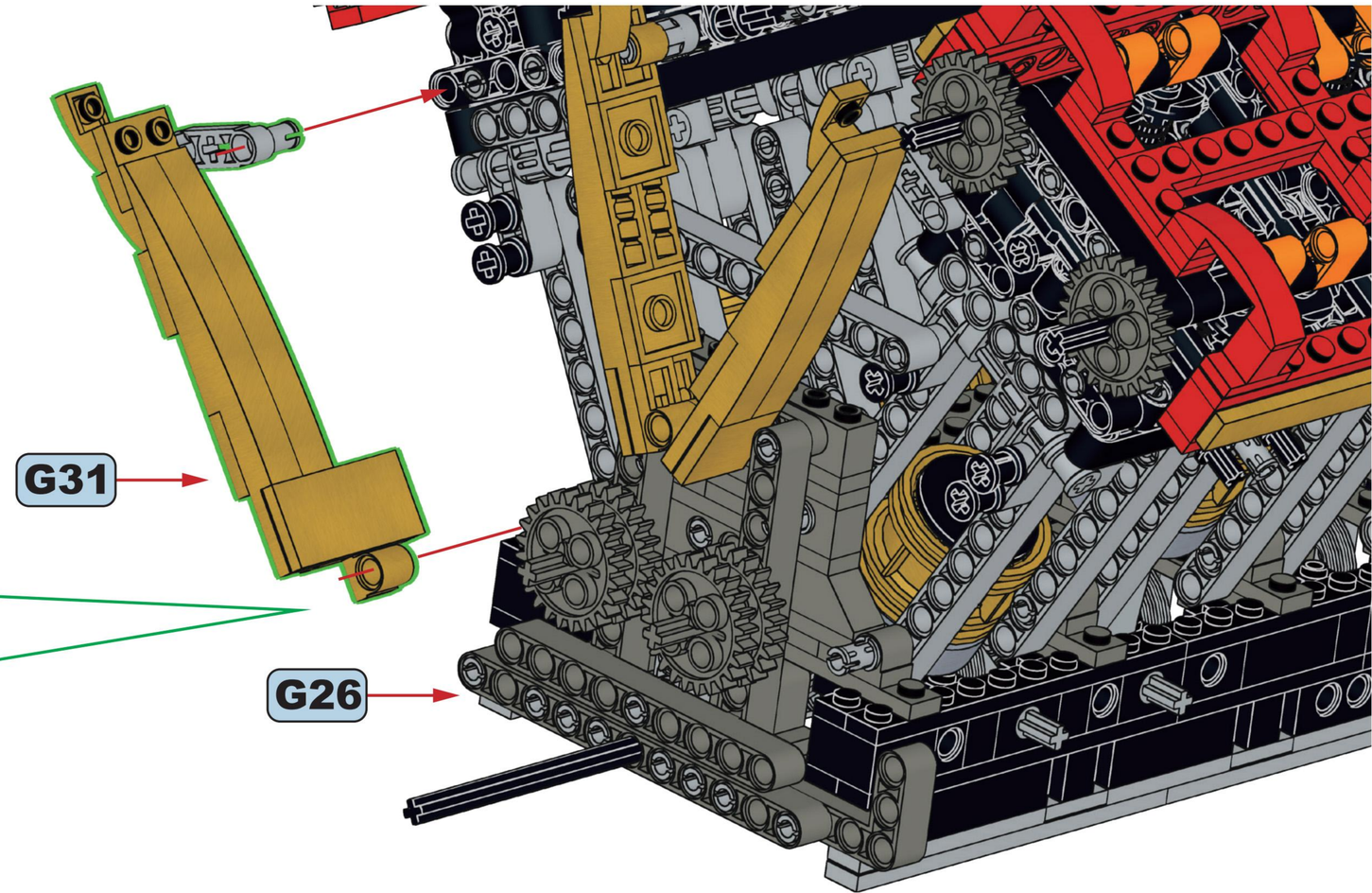

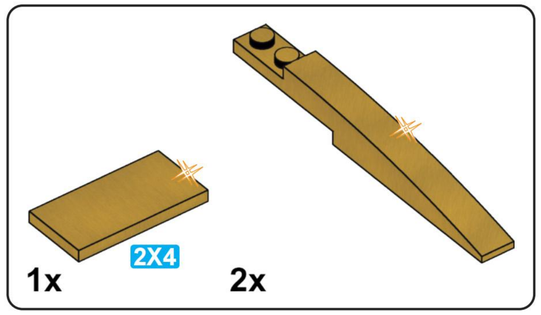

G33

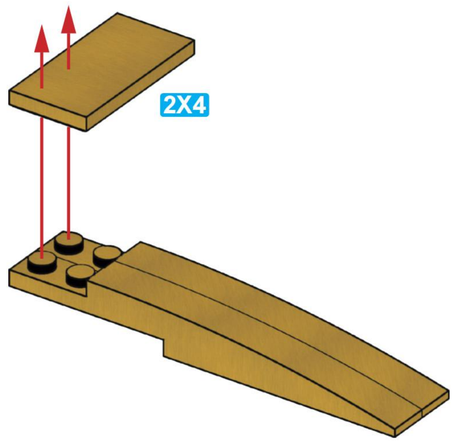

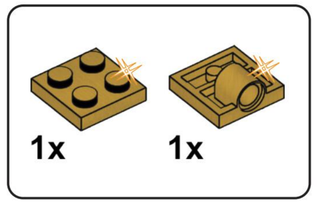

G34

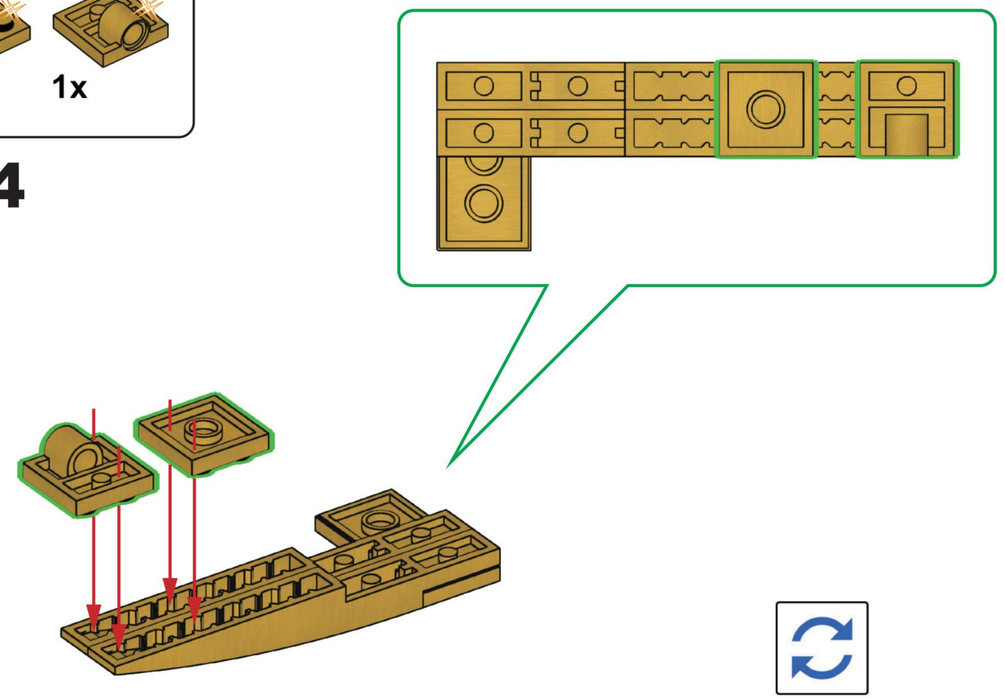

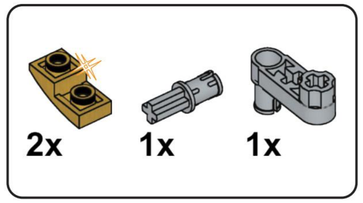

G35

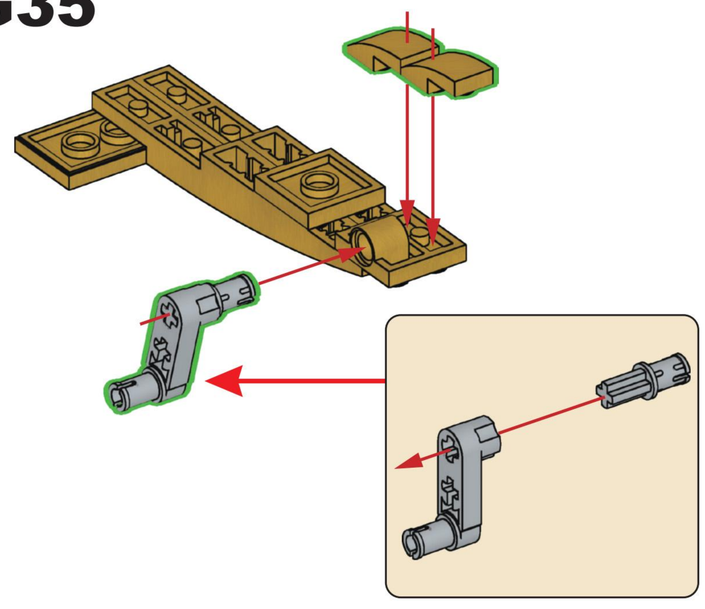

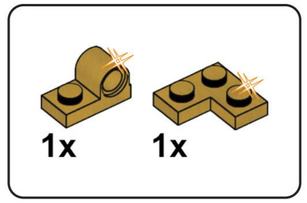

G36

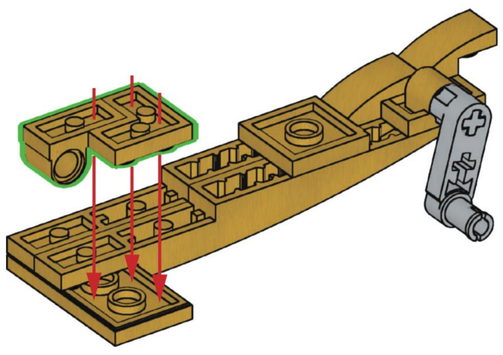

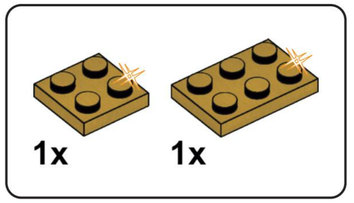

G37

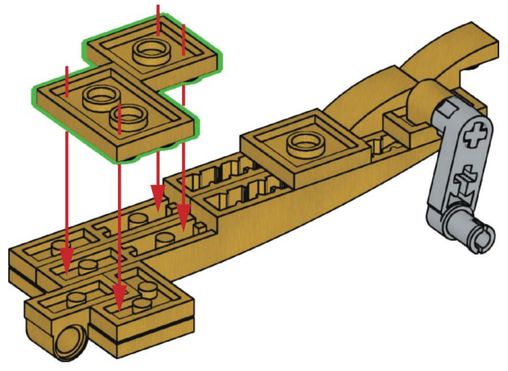

G38

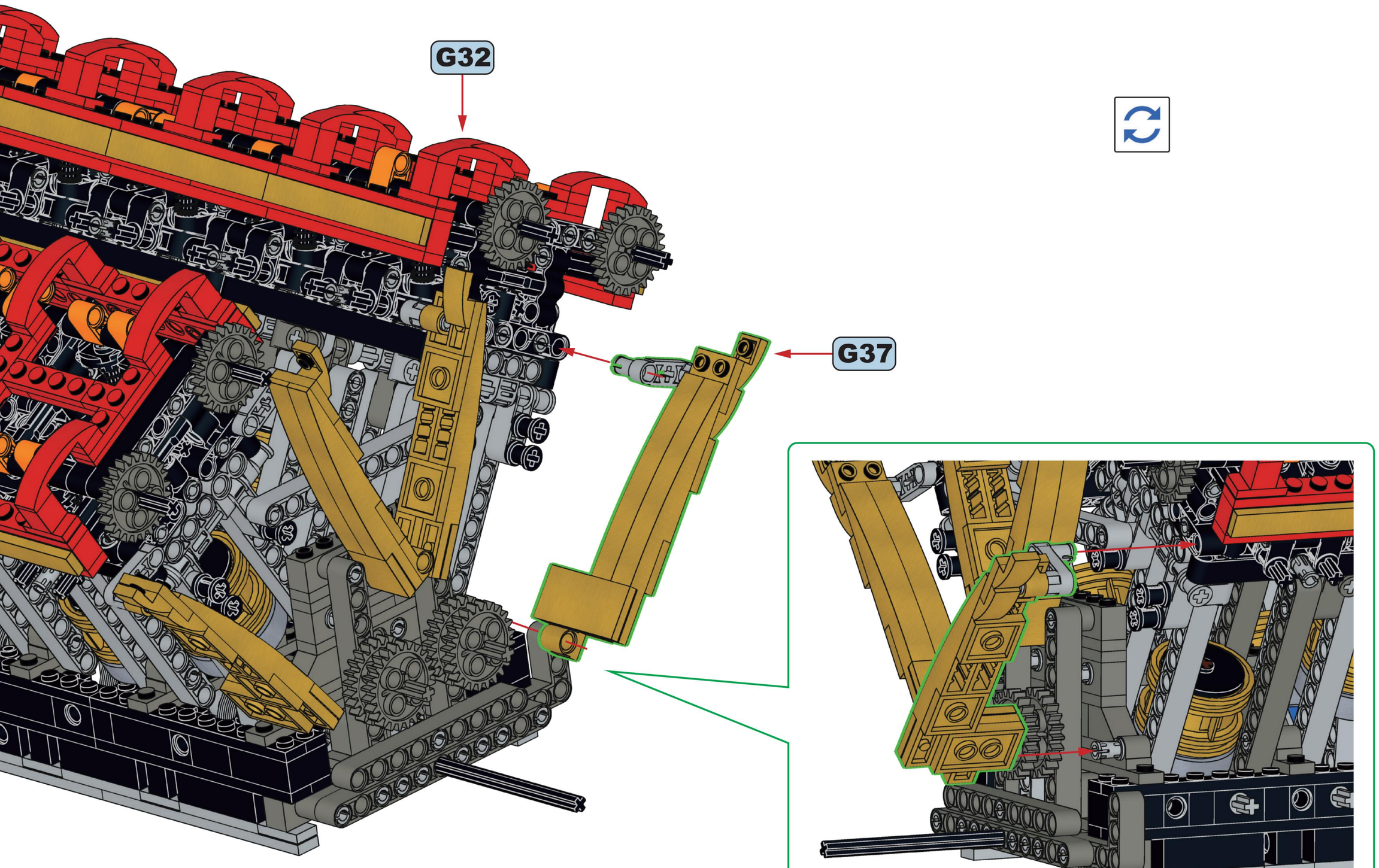

116x

G39

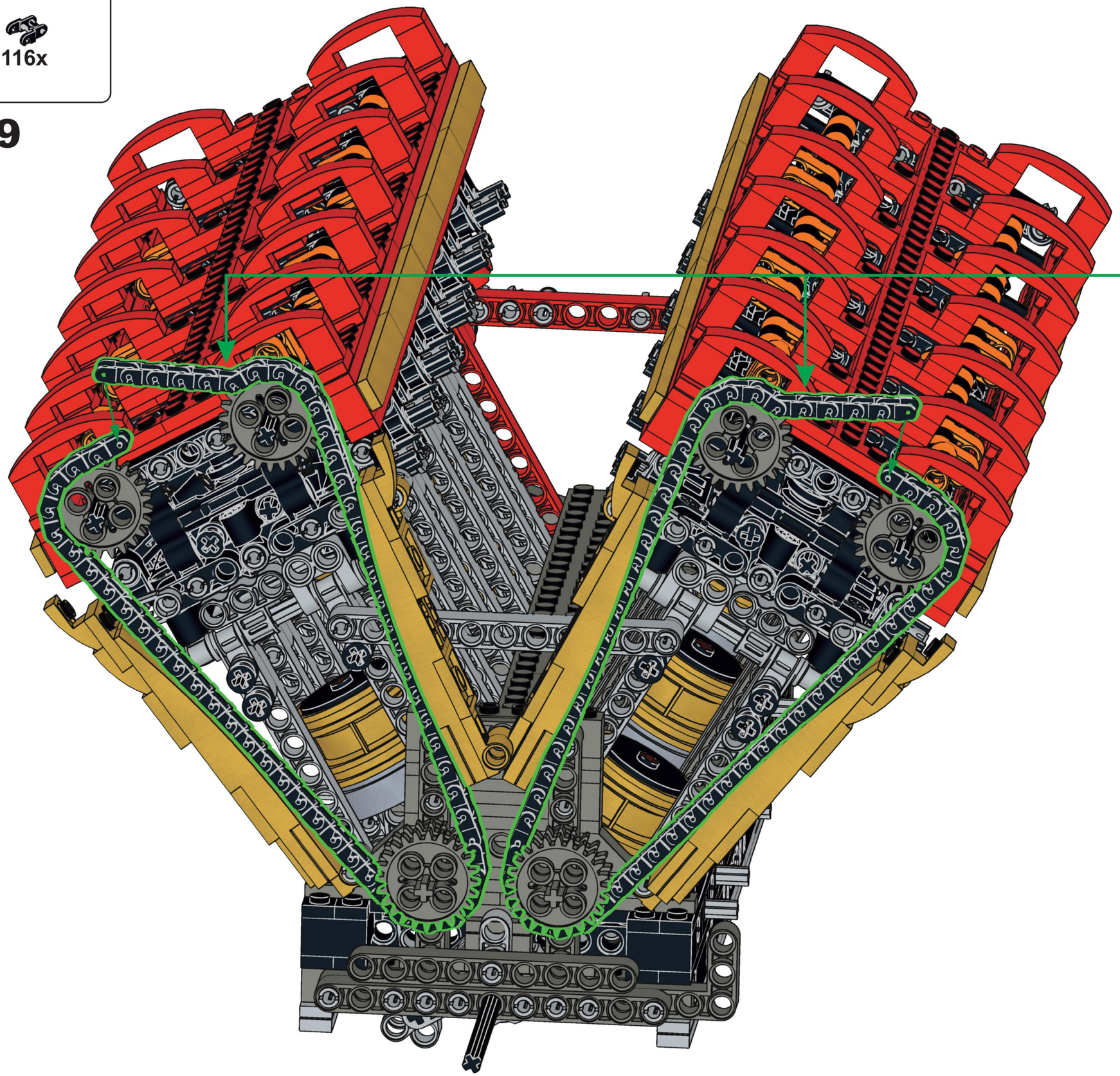

x58

x2

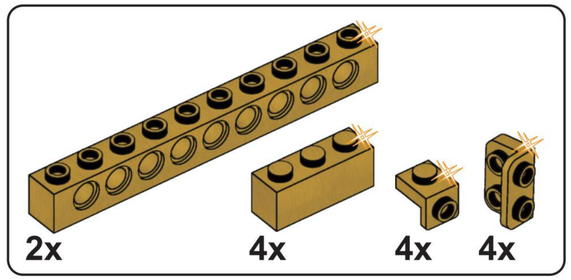

G40

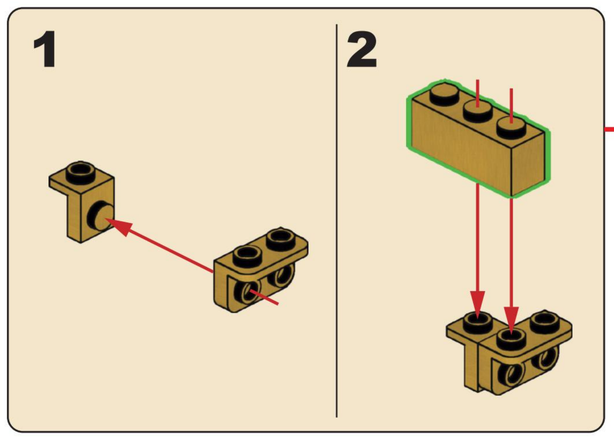

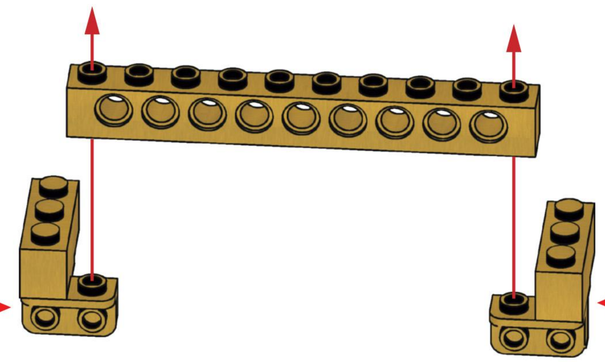

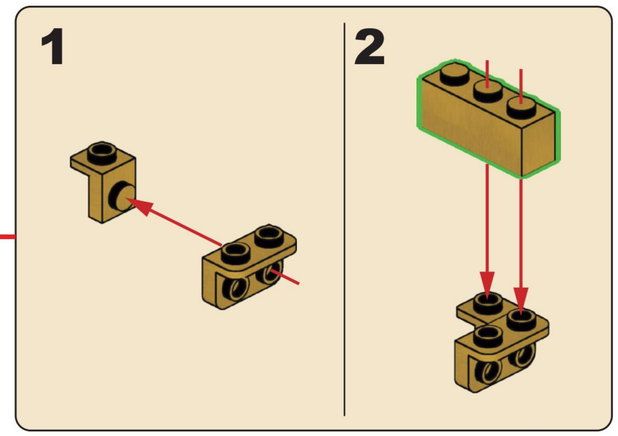

x2

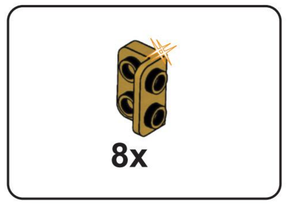

G41

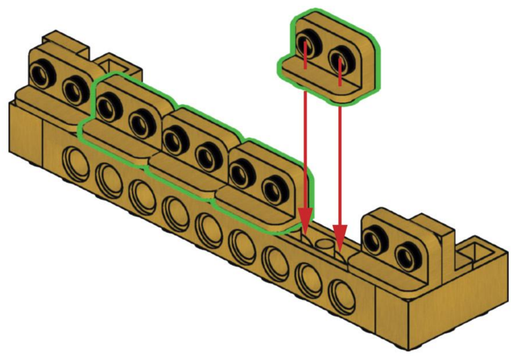

x2

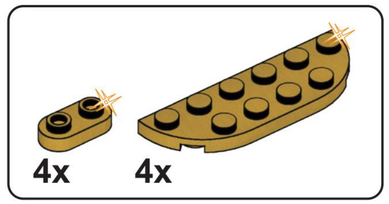

G42

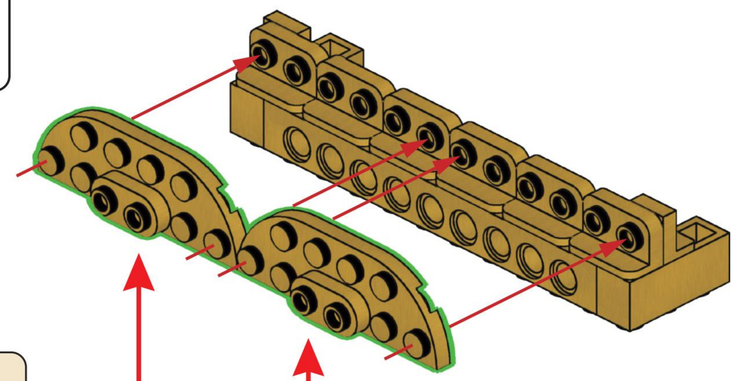

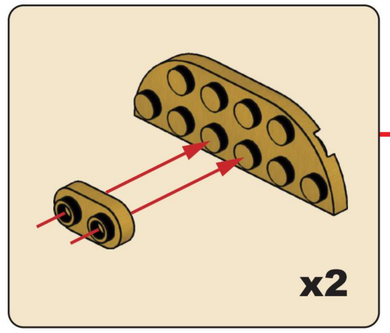

x2

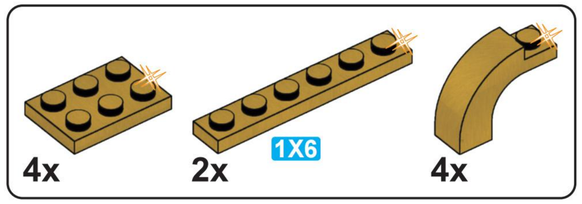

G43

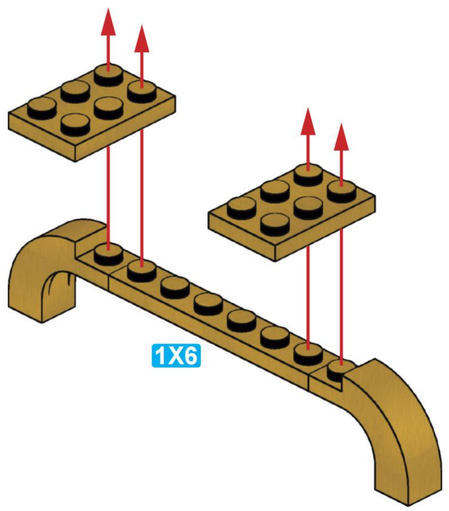

x2

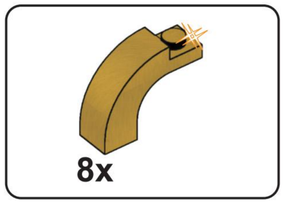

G44

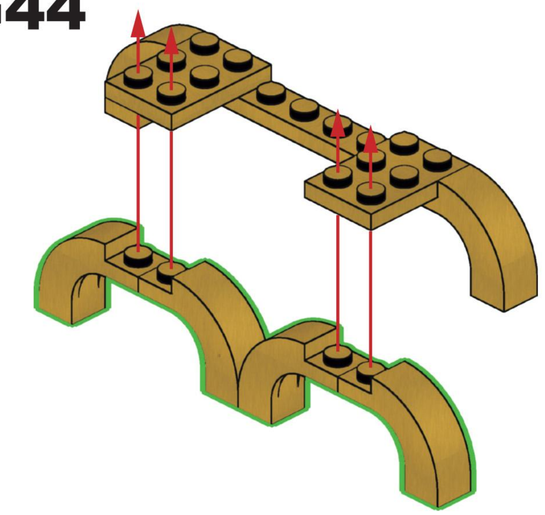

x2

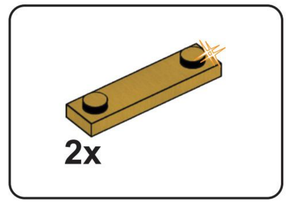

G45

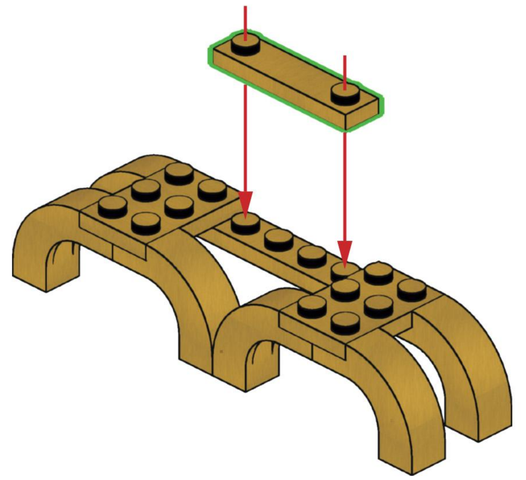

x2

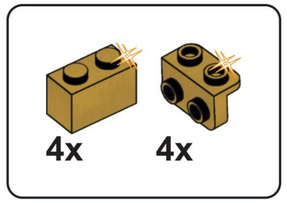

G46

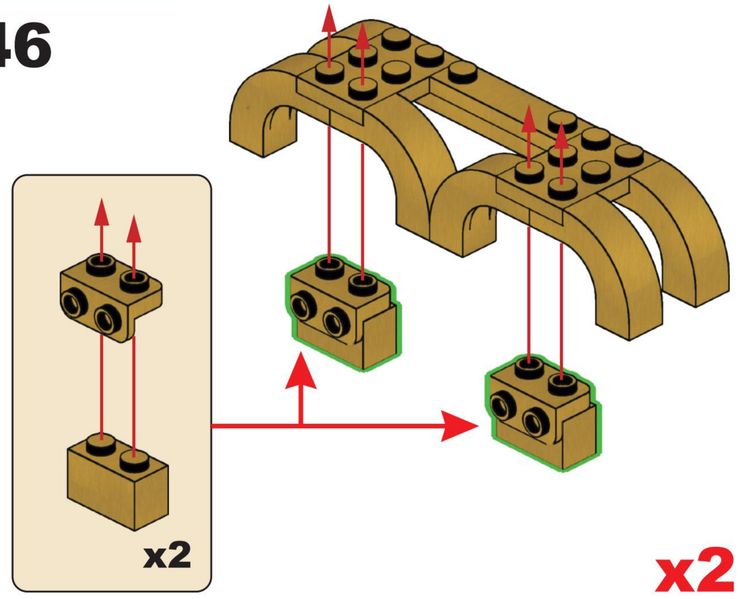

x2

G47

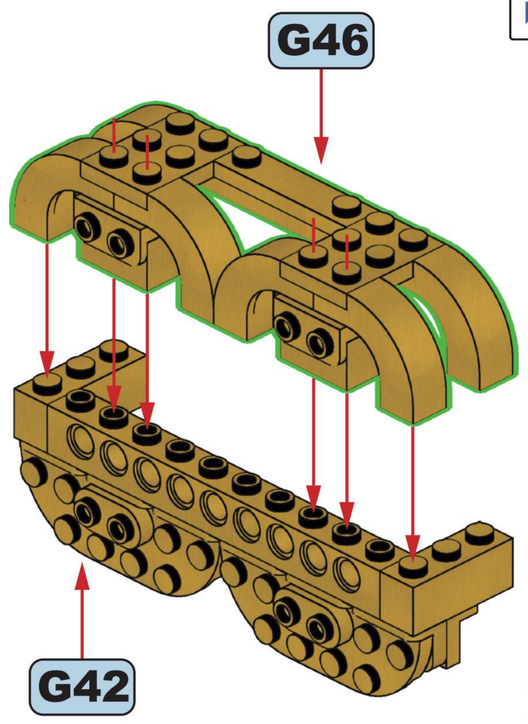

x2

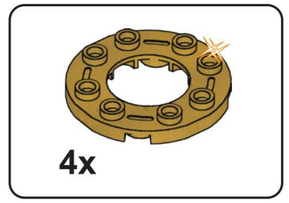

G48

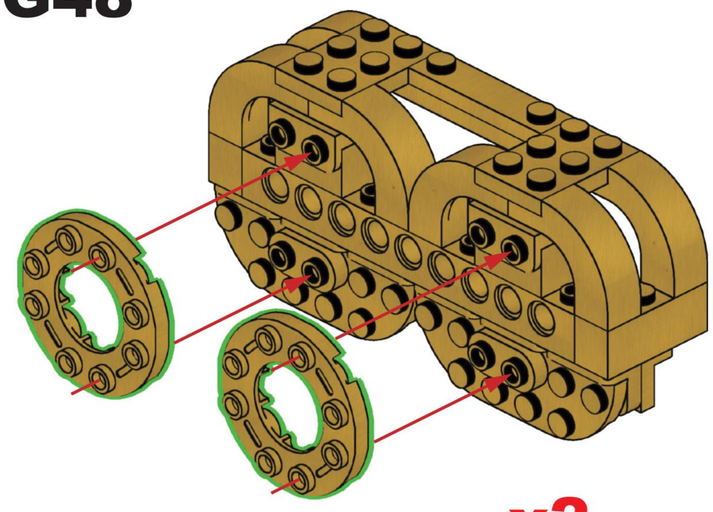

x2

G49

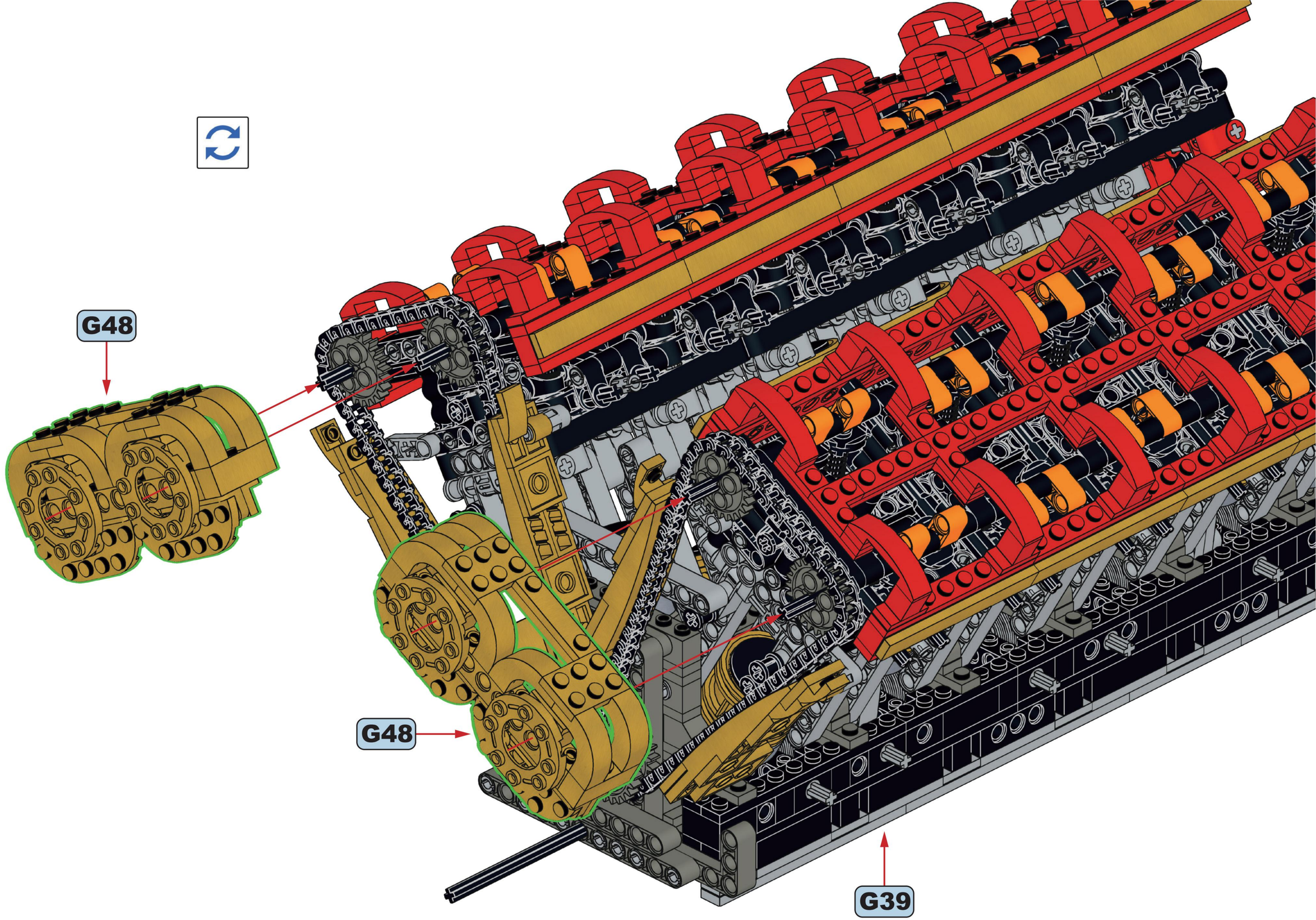

4x

G50

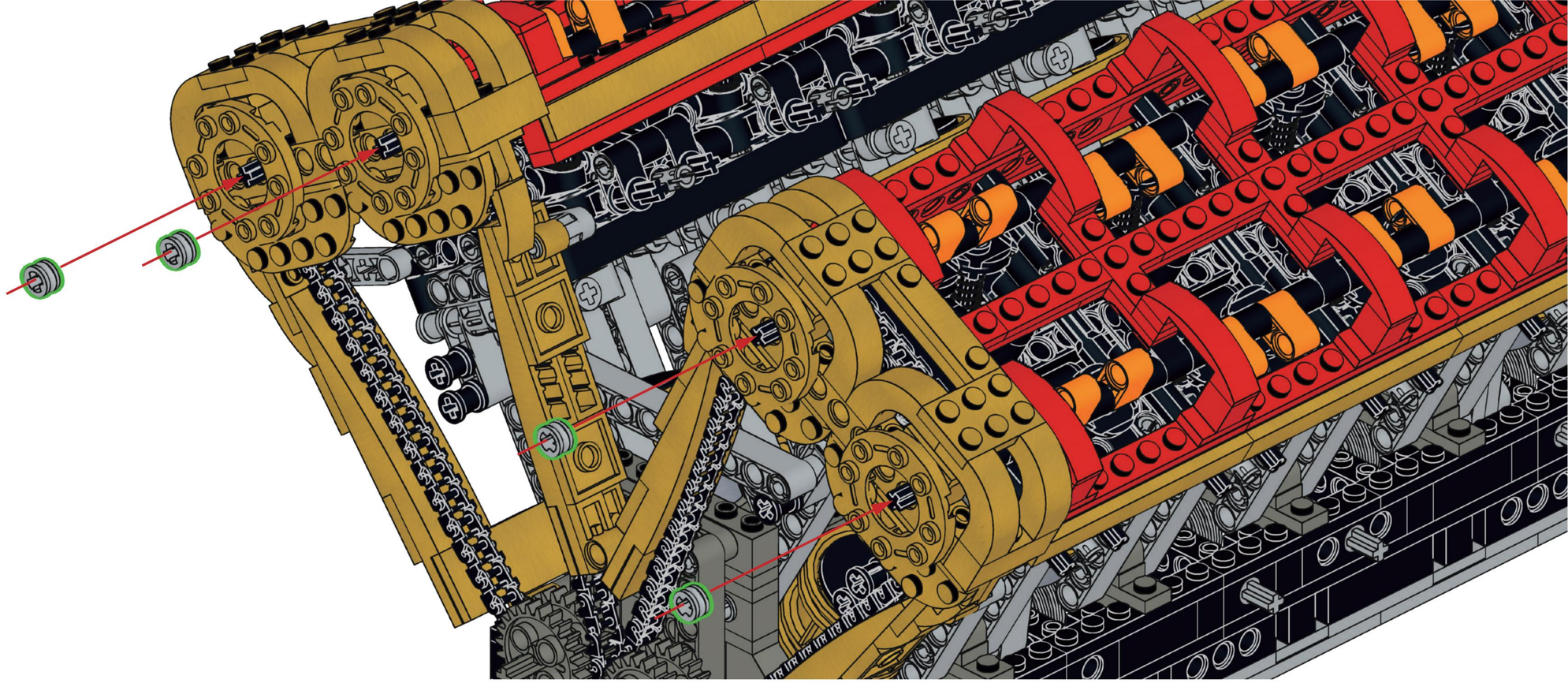

1x 2x 2x

G51

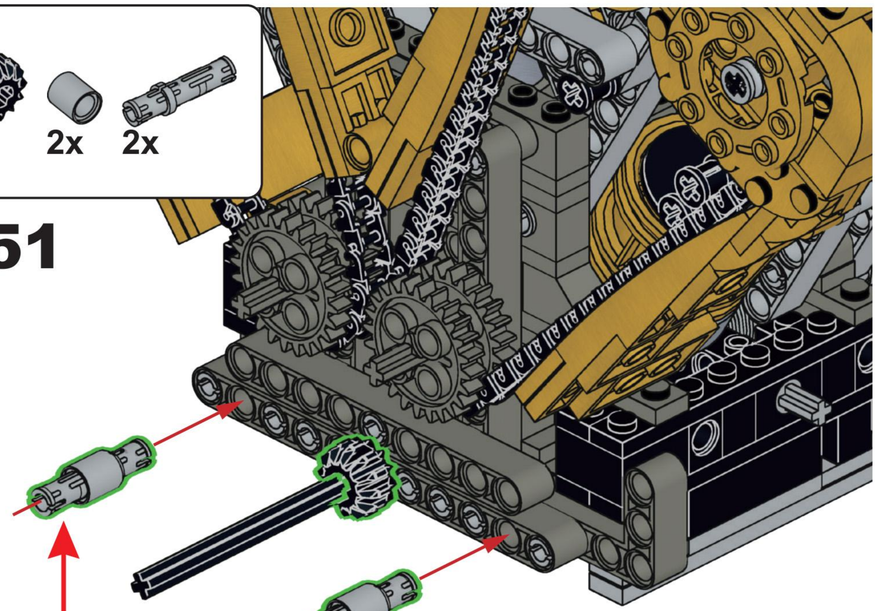

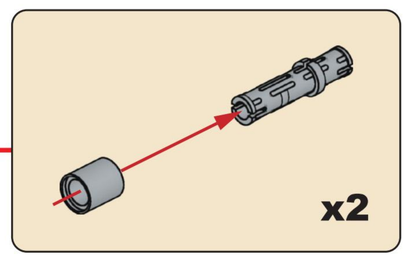

1x 1x 1x 1x 1x

G52

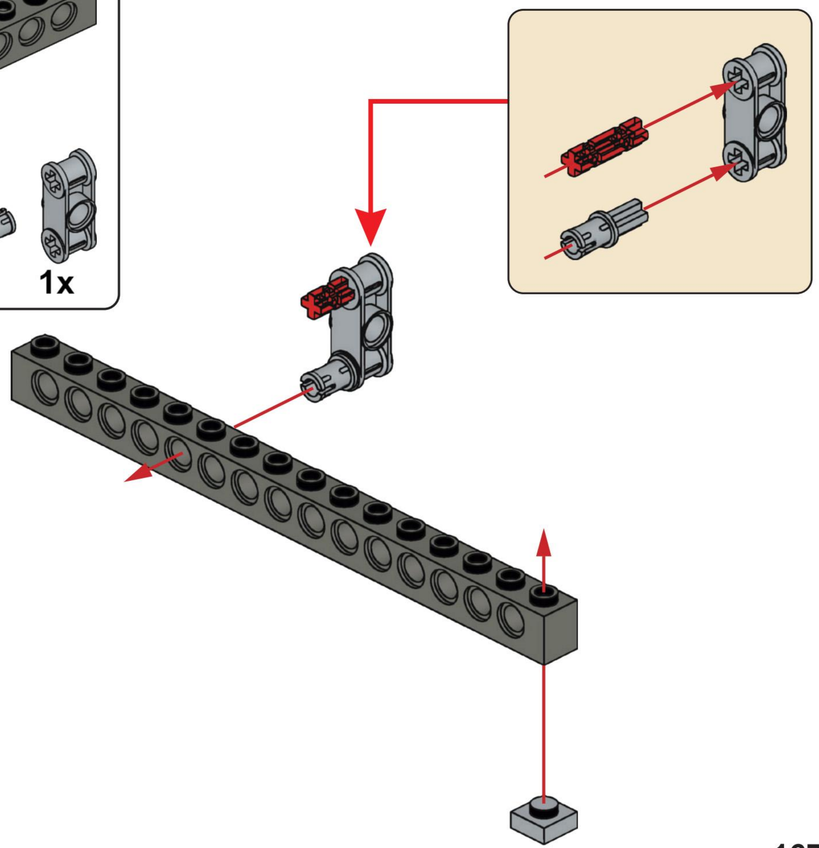

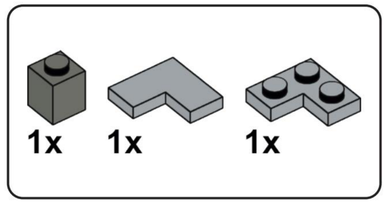

G53

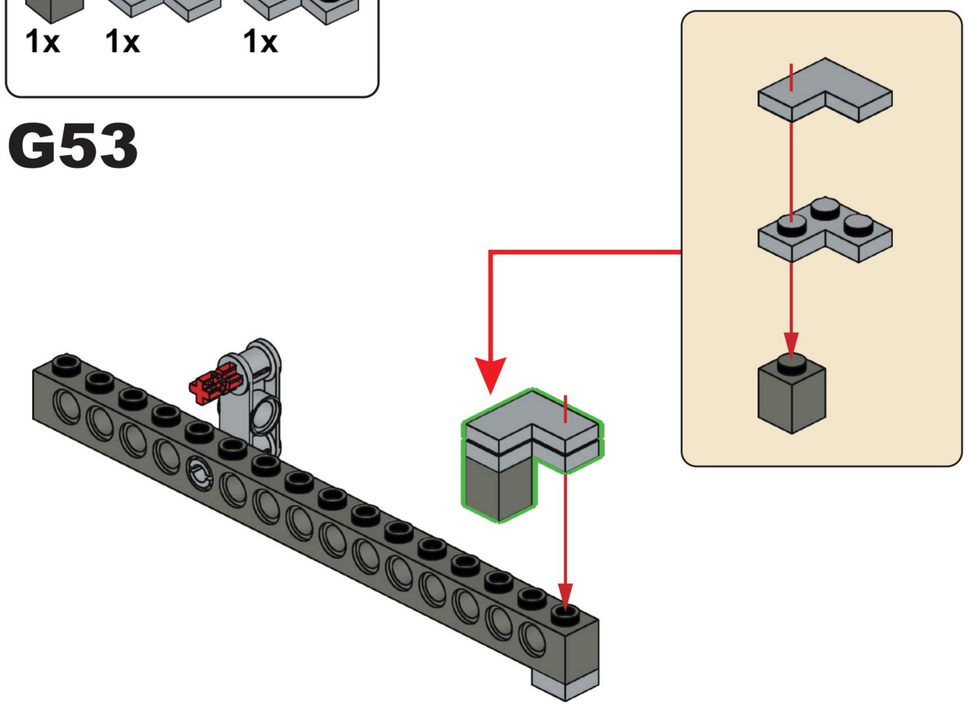

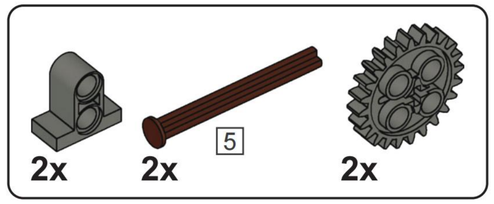

G54

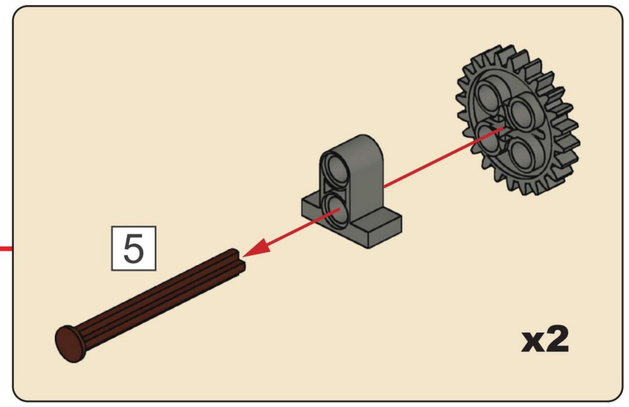

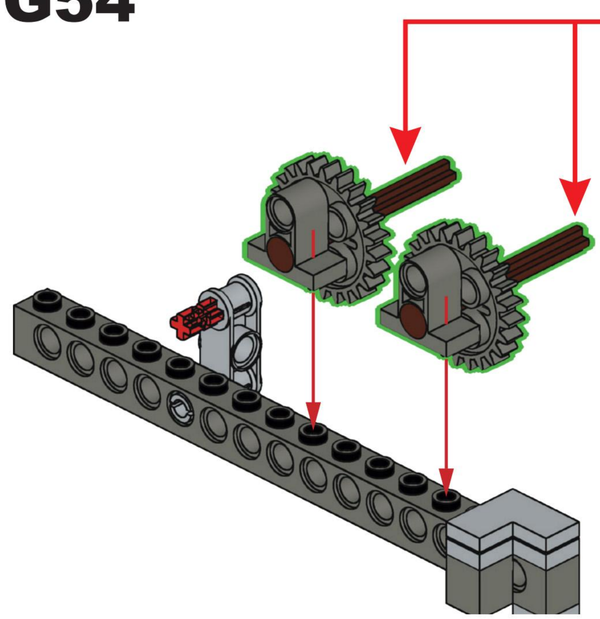

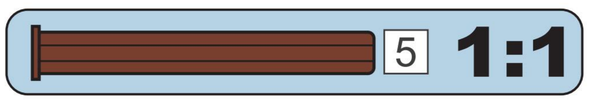

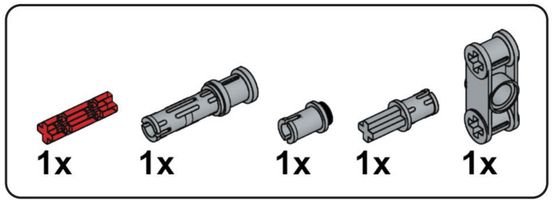

G55

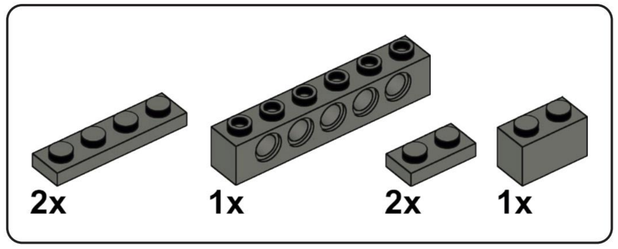

G56

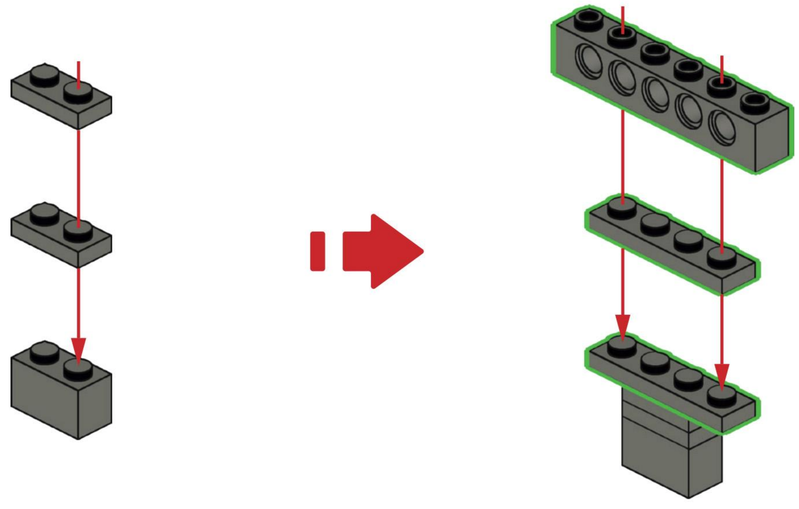

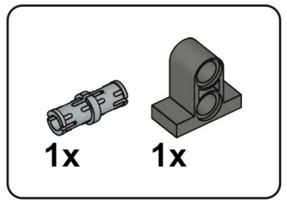

G57

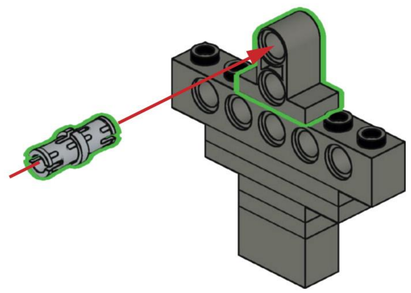

G58

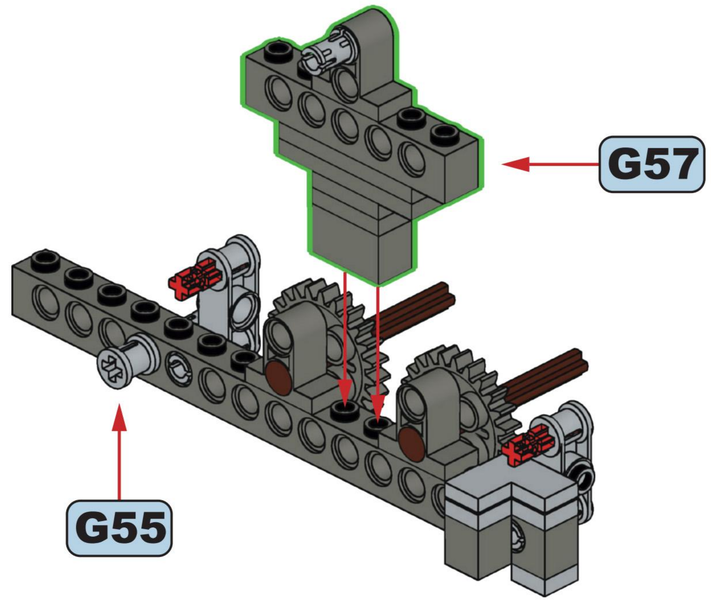

G59

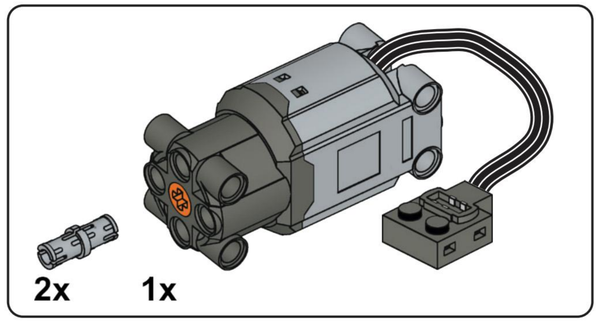

G60

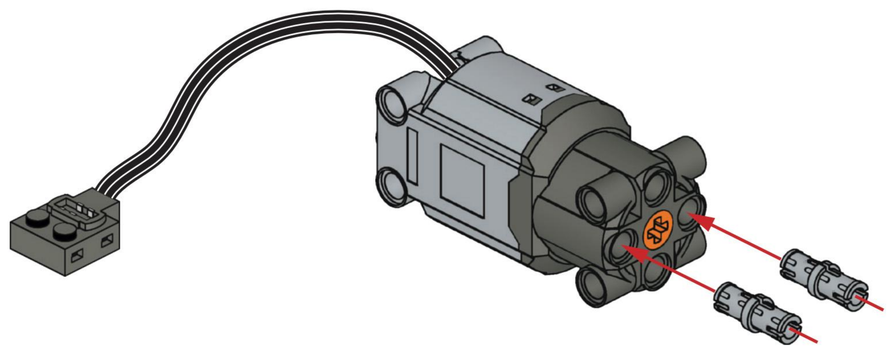

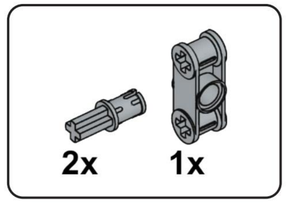

G61

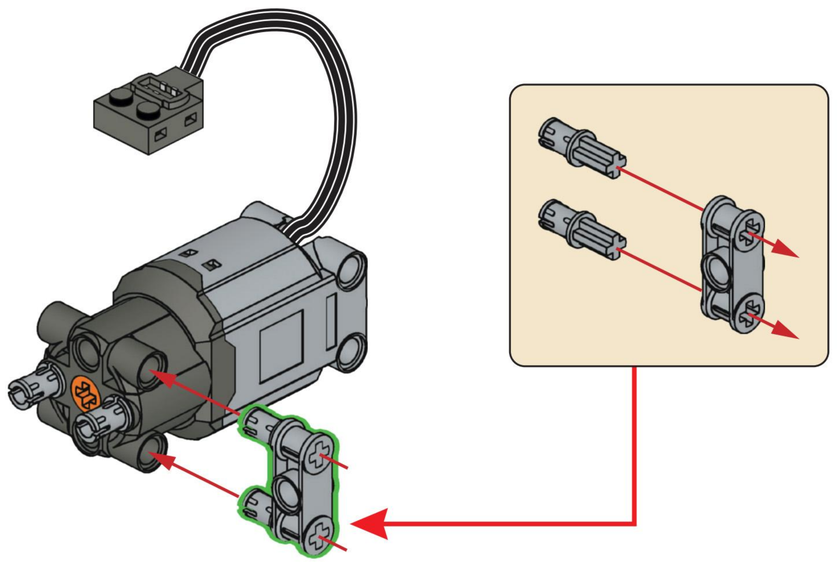

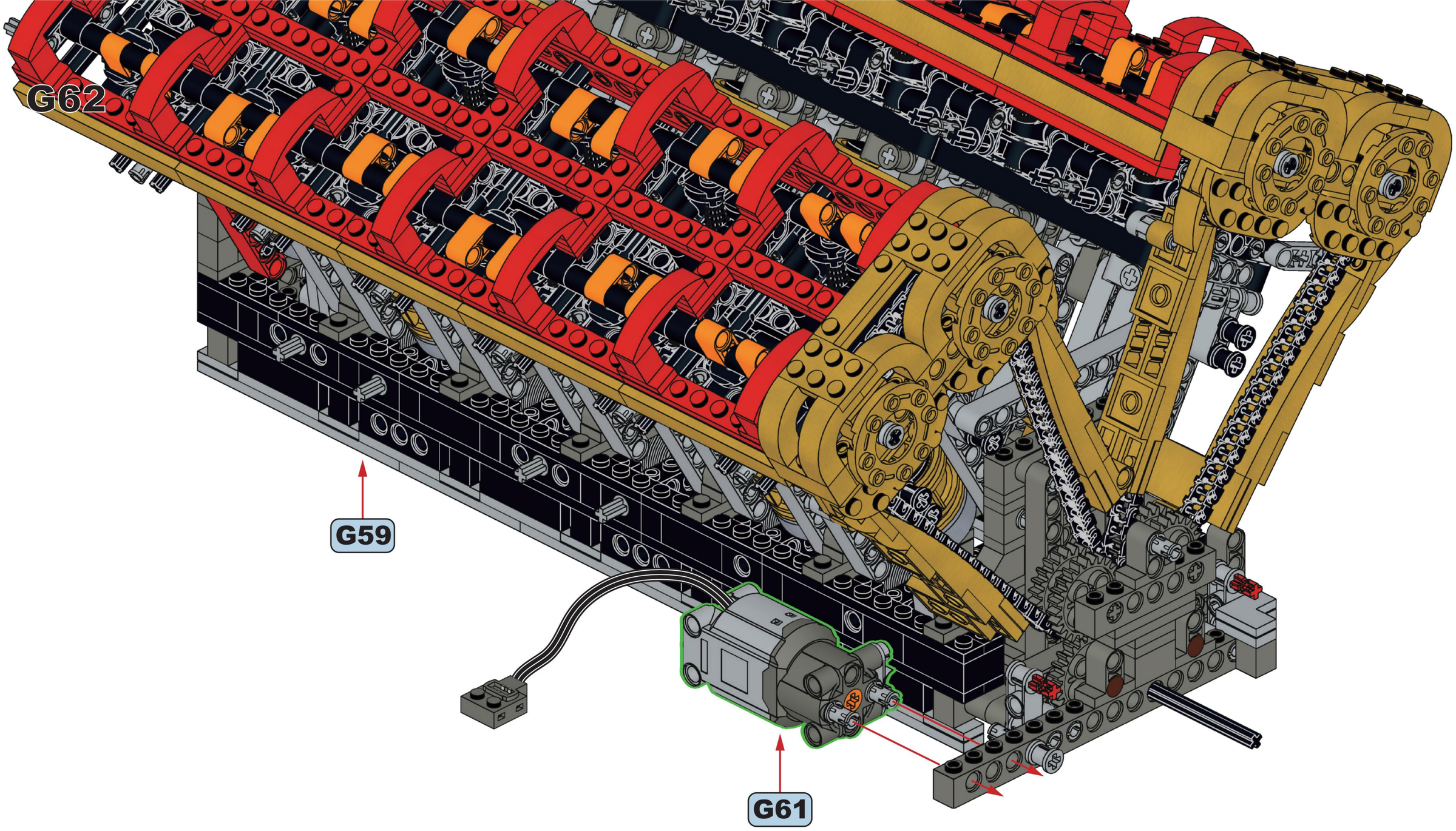
G62
G59
G61

2x 1x 1x 1x

G63

8

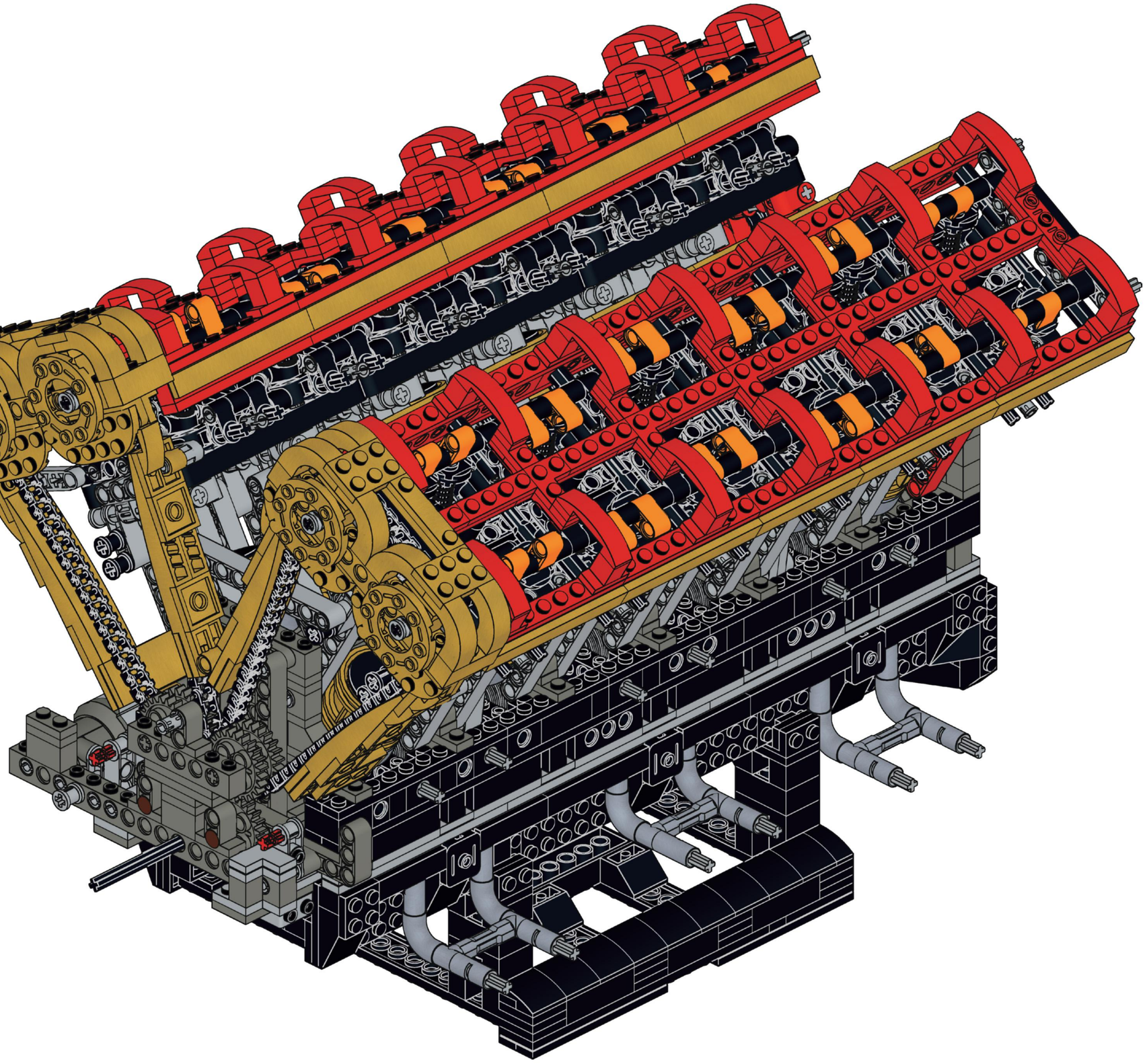

H

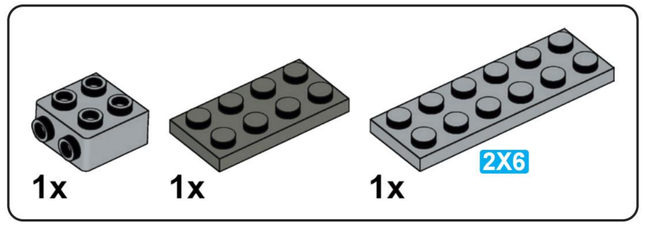

H1

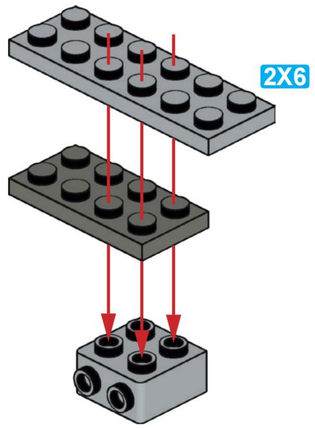

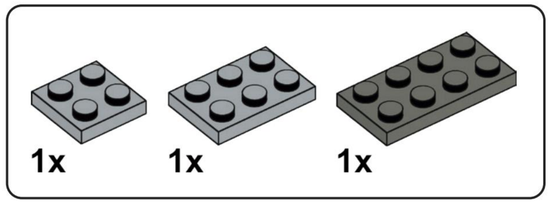

H2

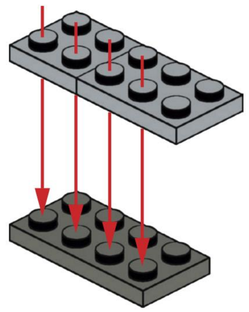

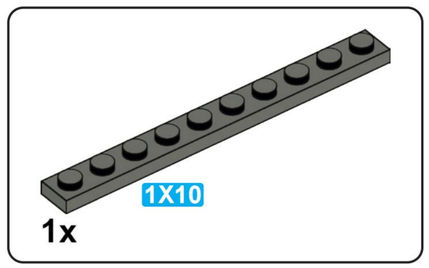

H3

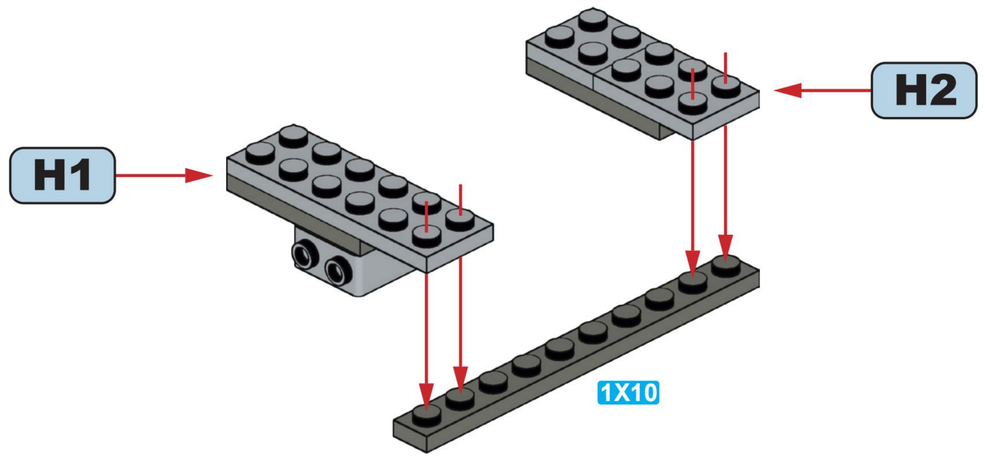

H4

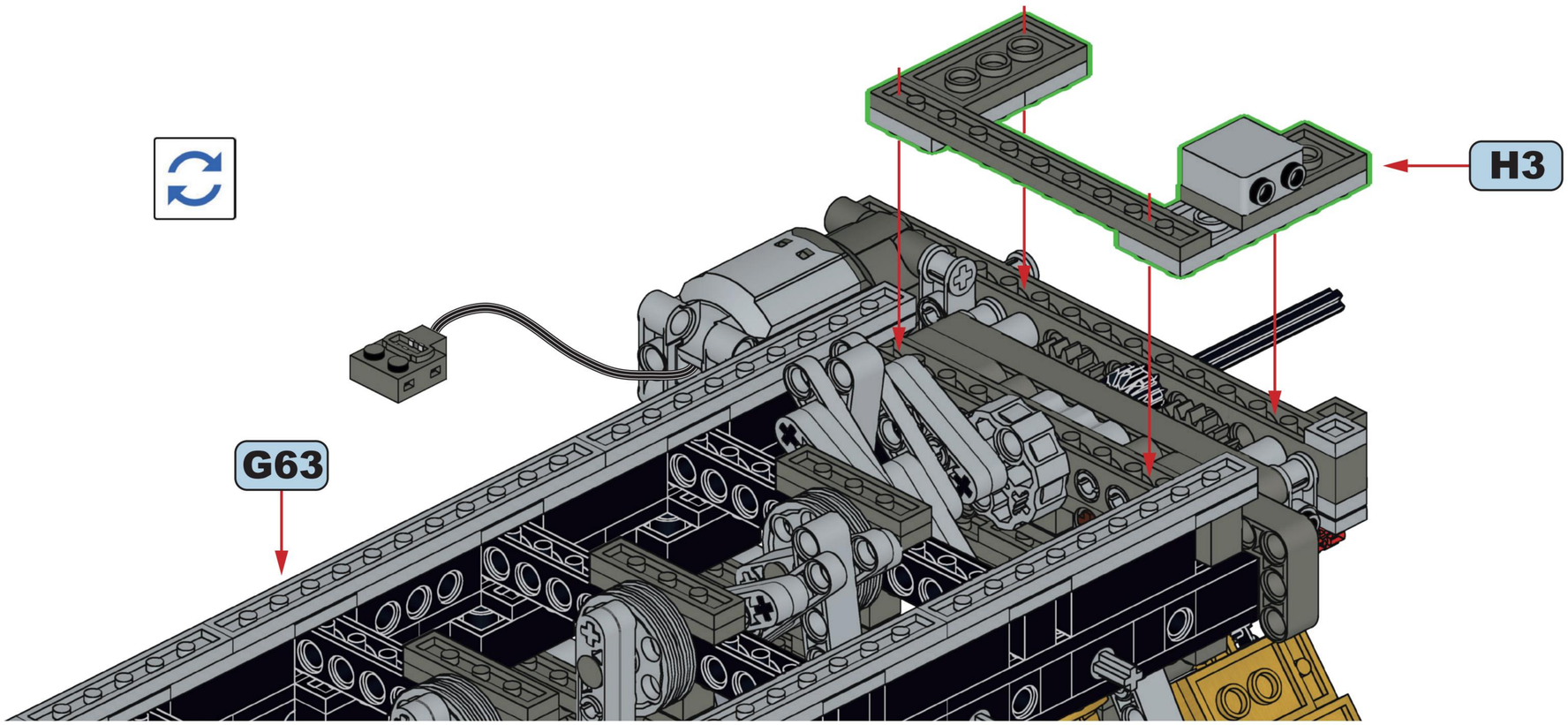

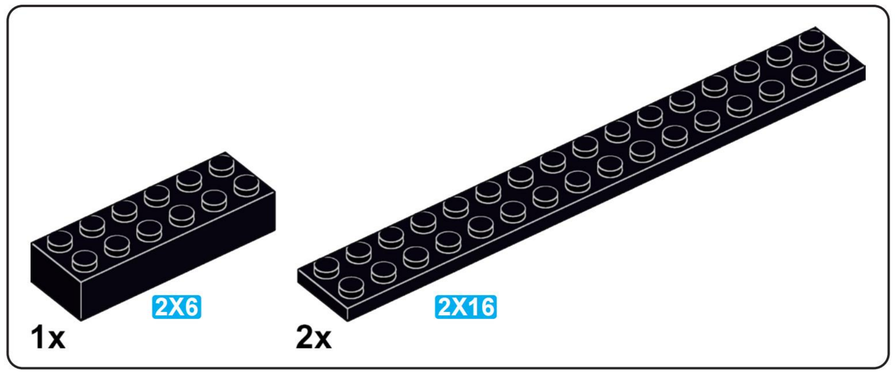

H5

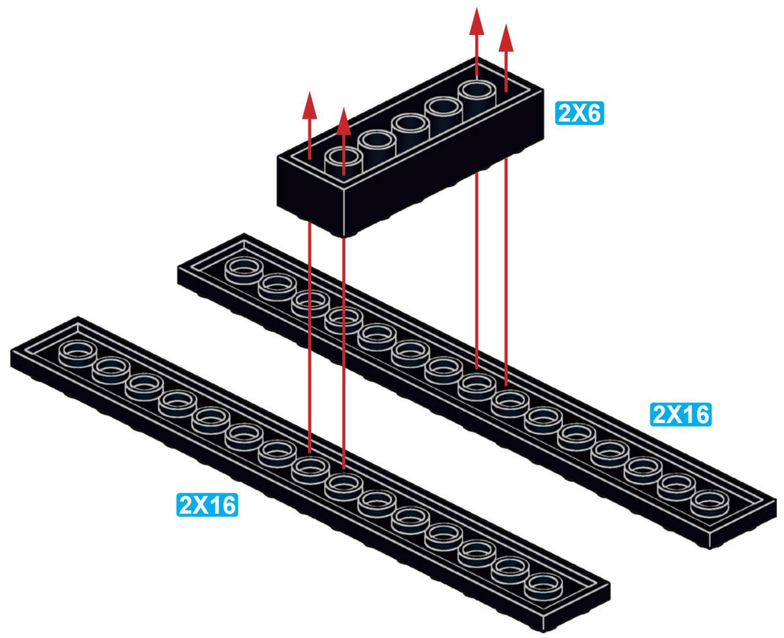

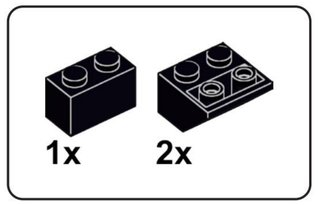

H6

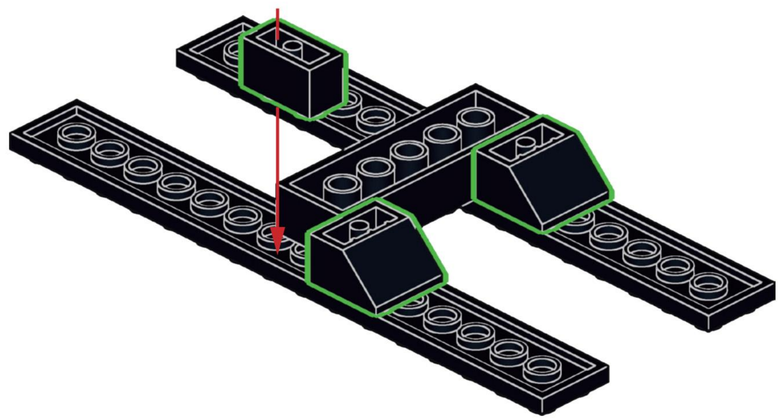

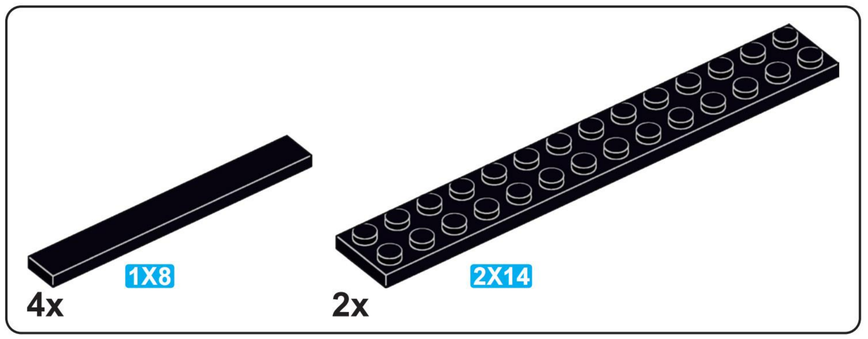

H7

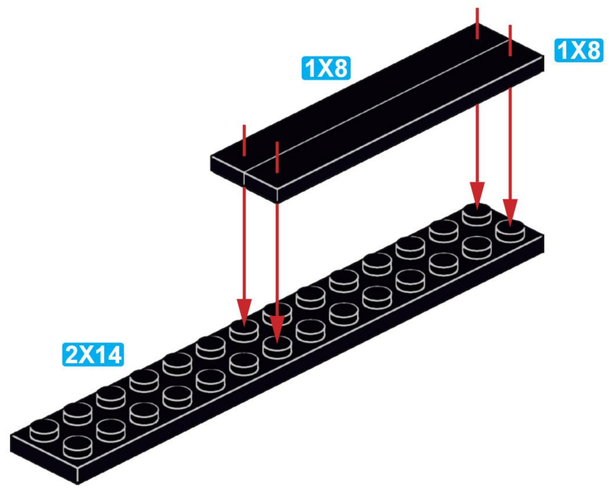

x2

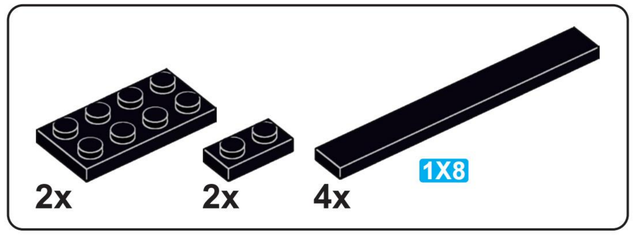

H8

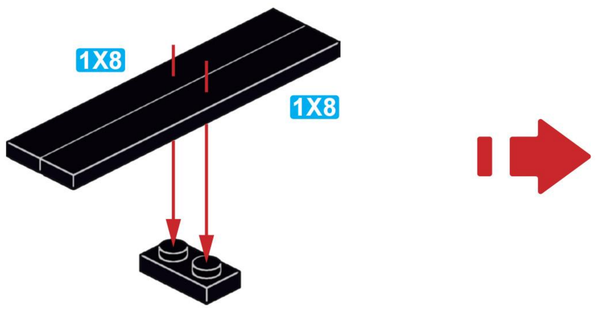

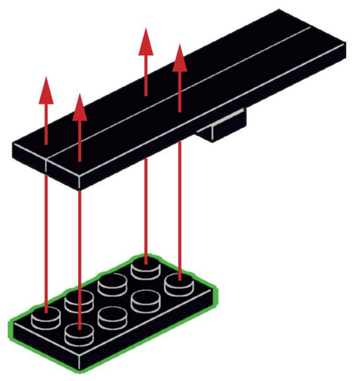

x2

H9

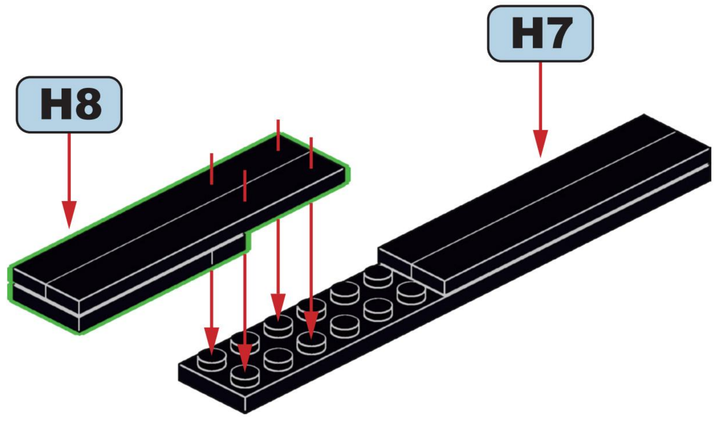

x2

H10

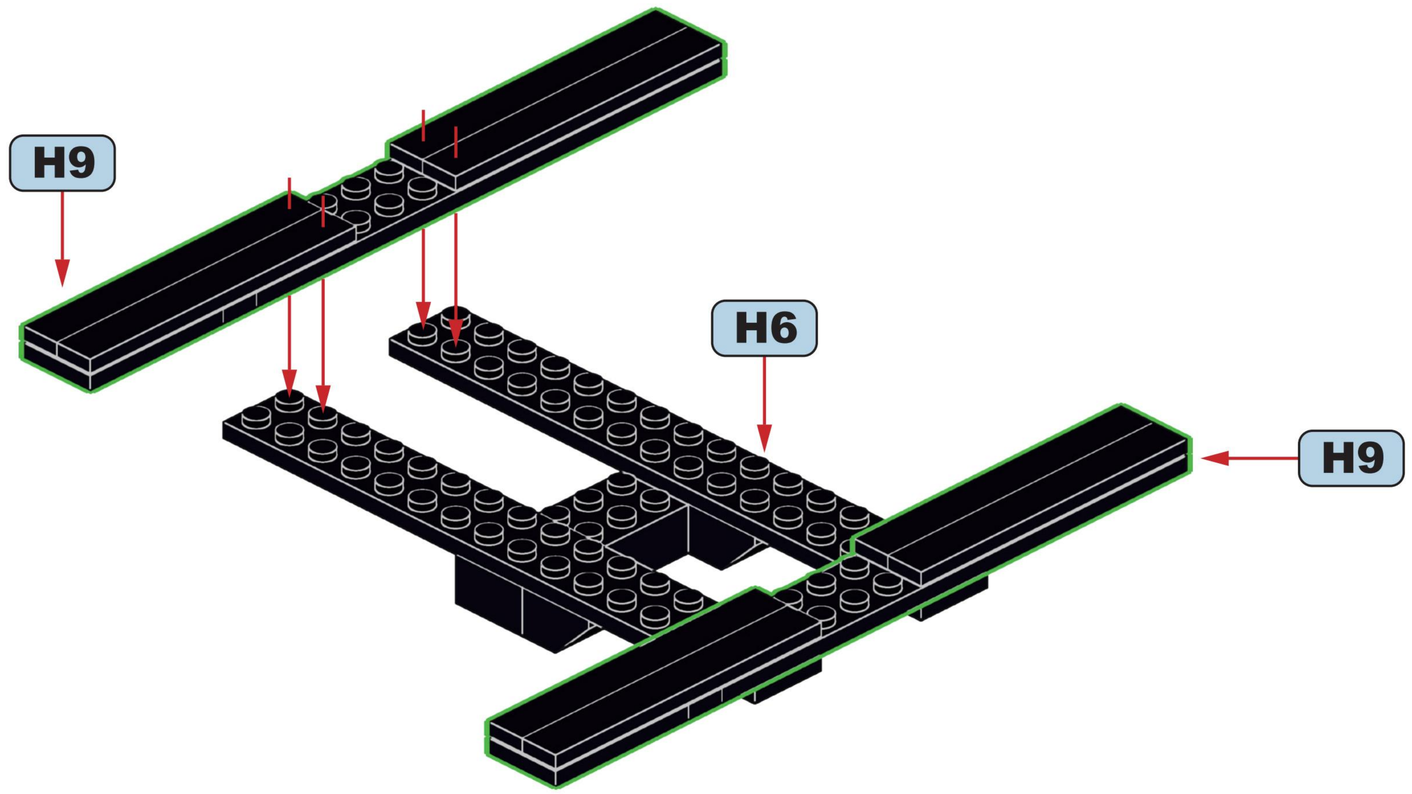

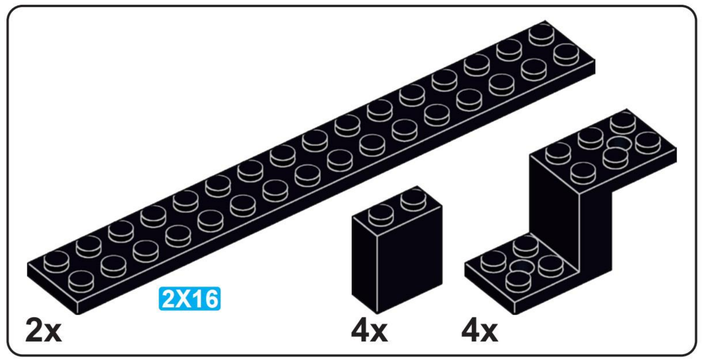

H11

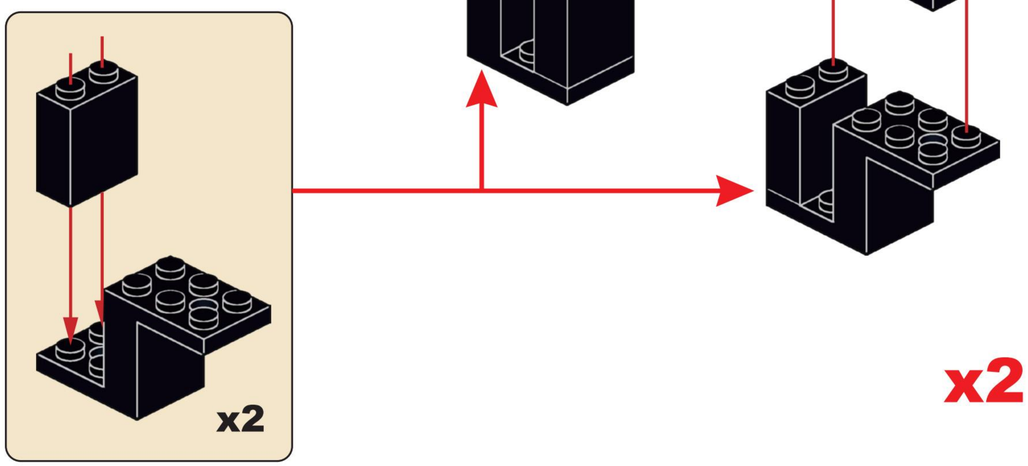

x2

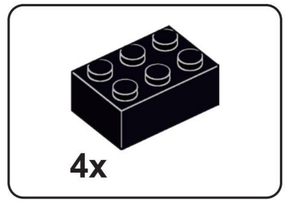

H12

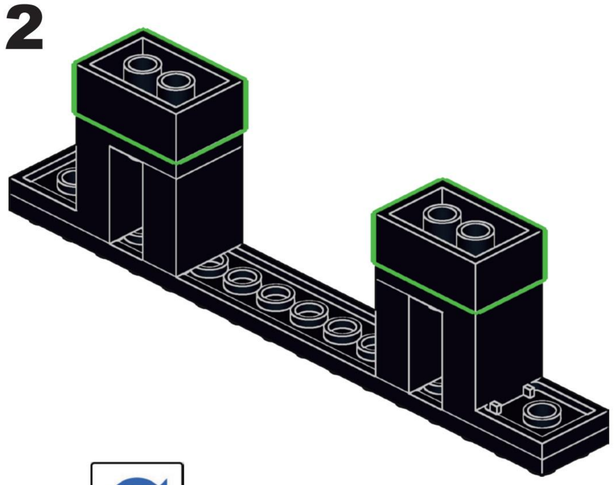

x2

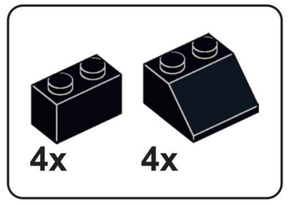

H13

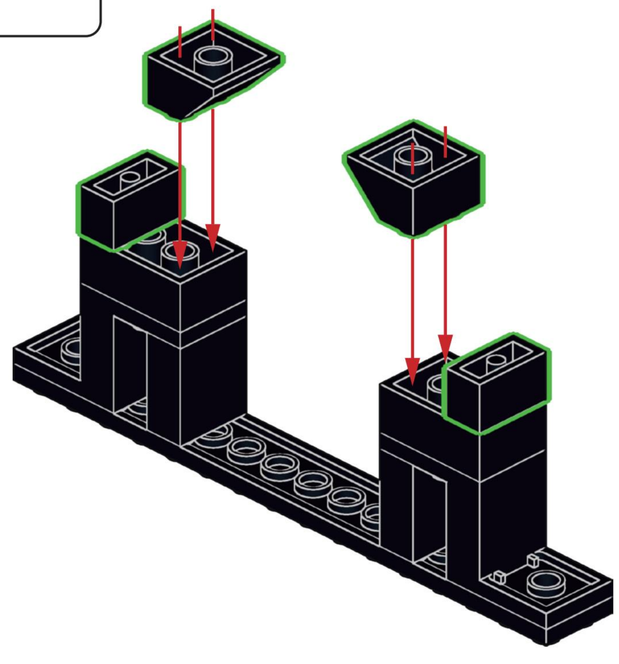

x2

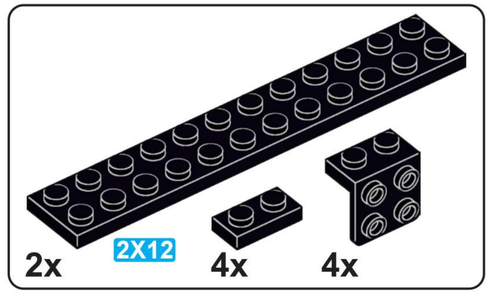

H14

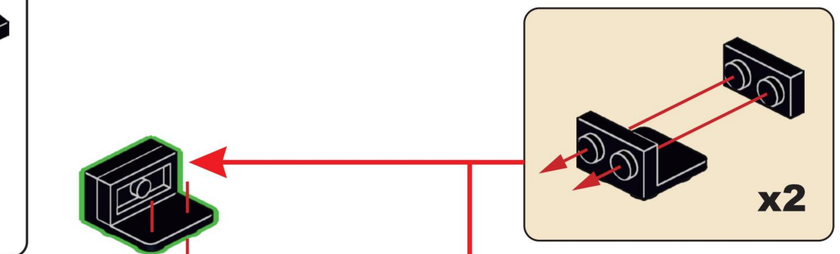

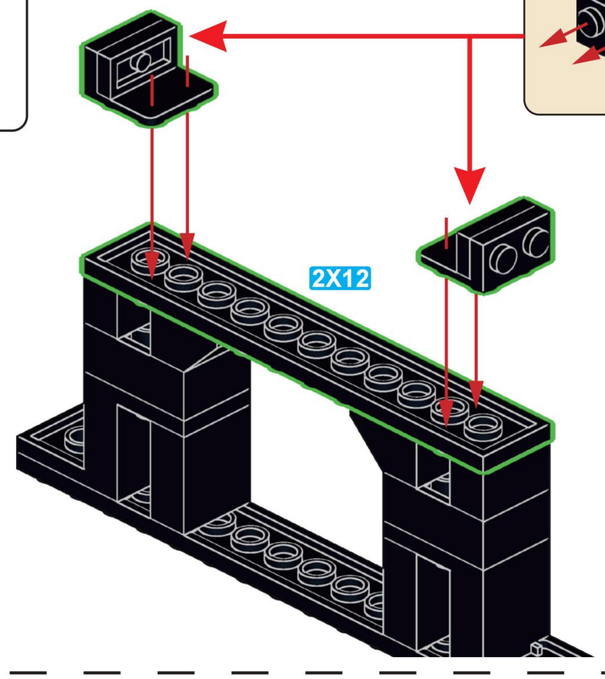

x2

H15

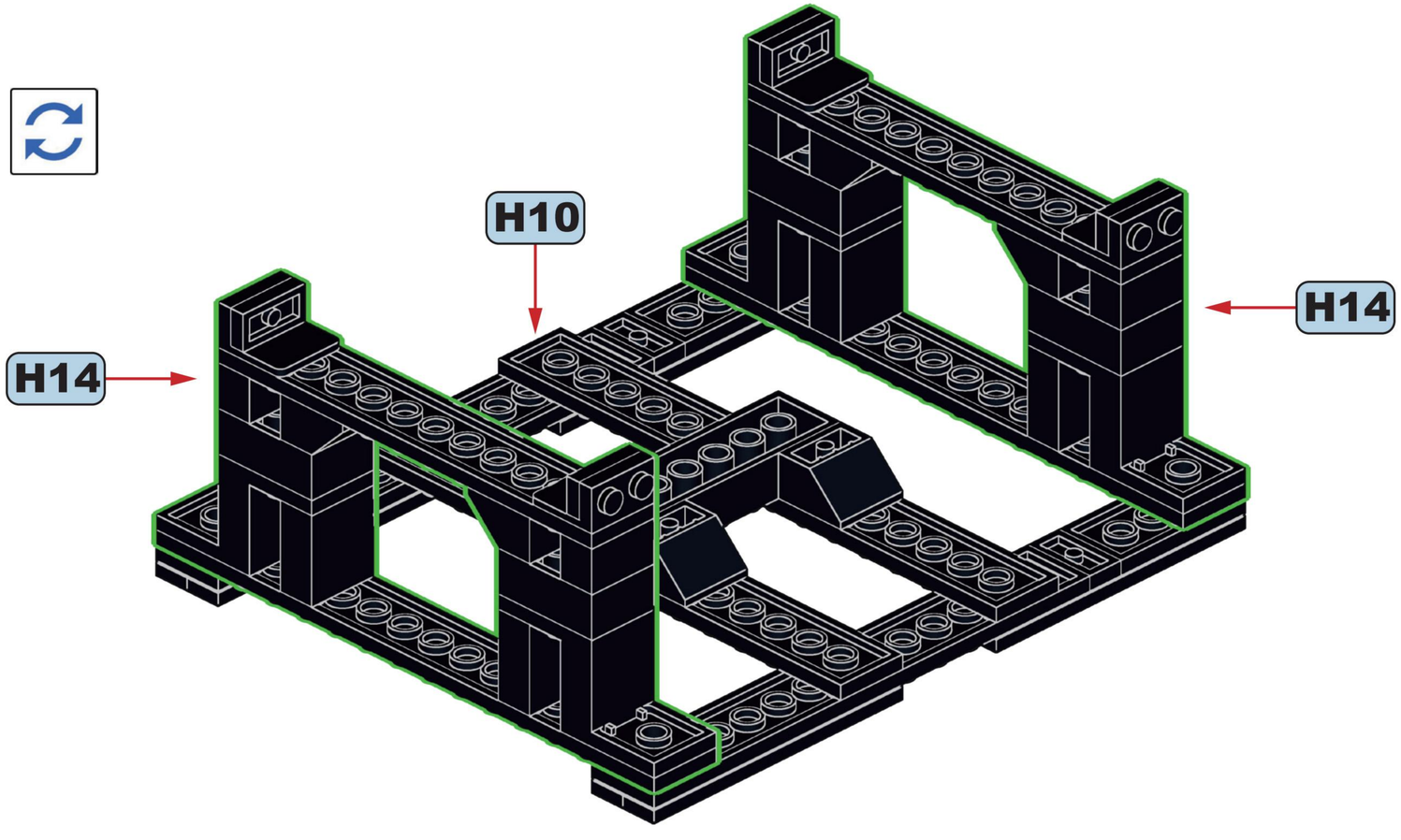



H16

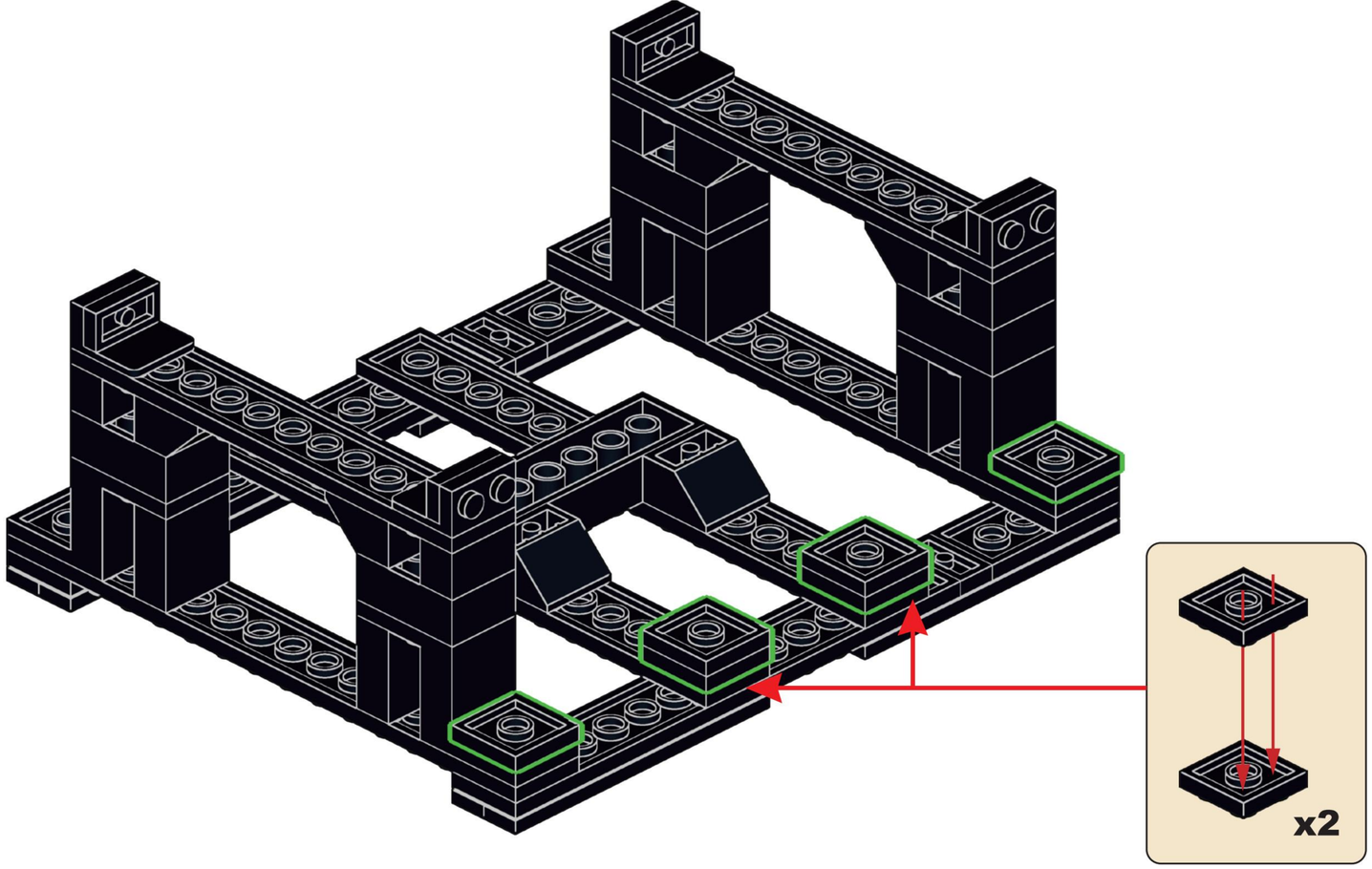

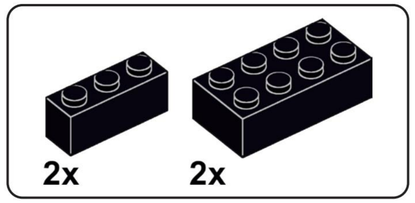

H17

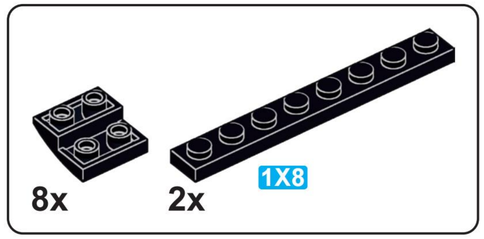

H18

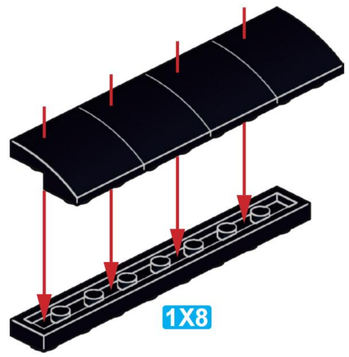

x2

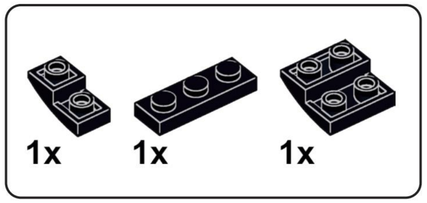

H19

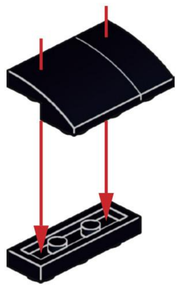

H20

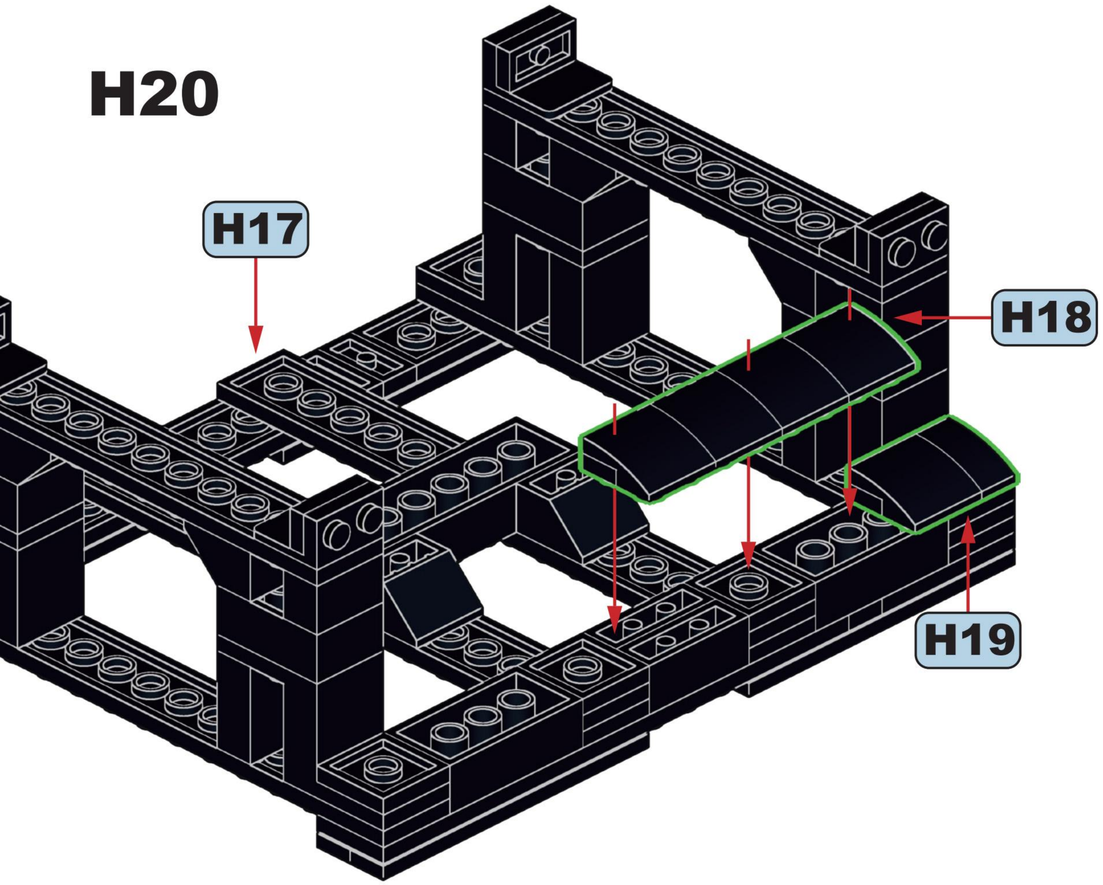

H21

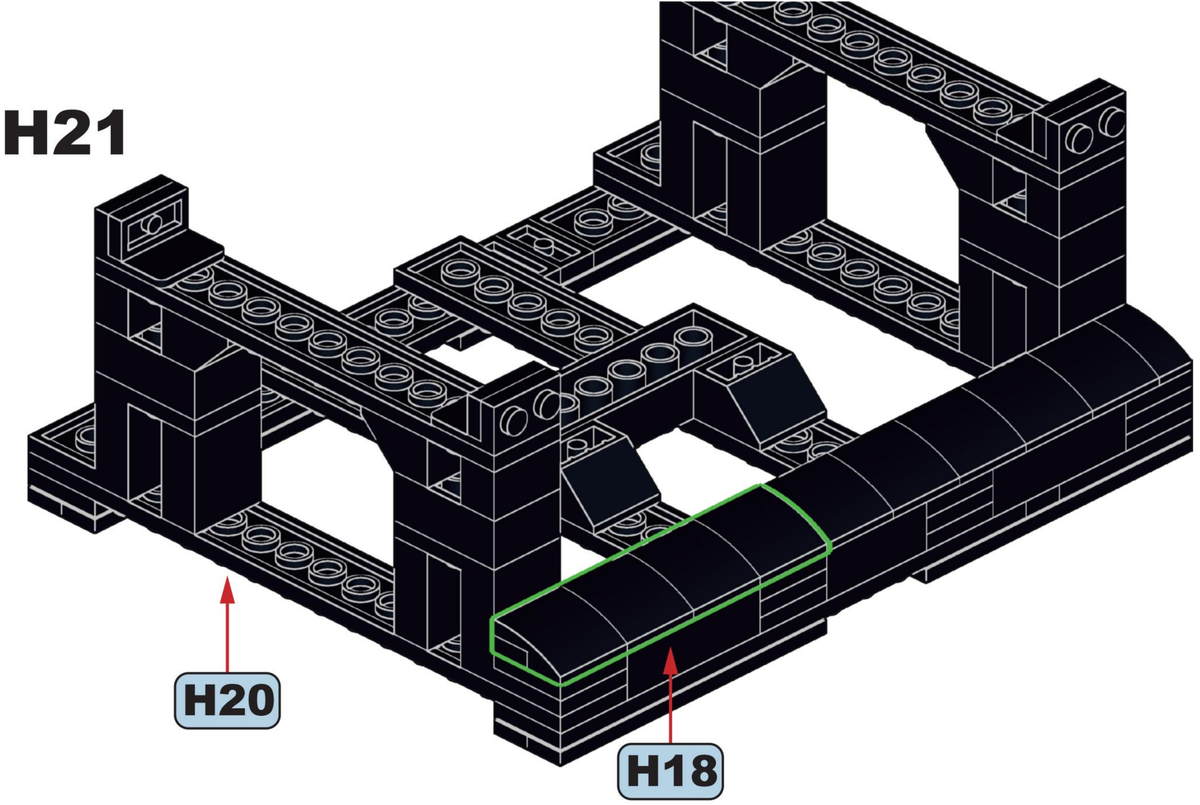

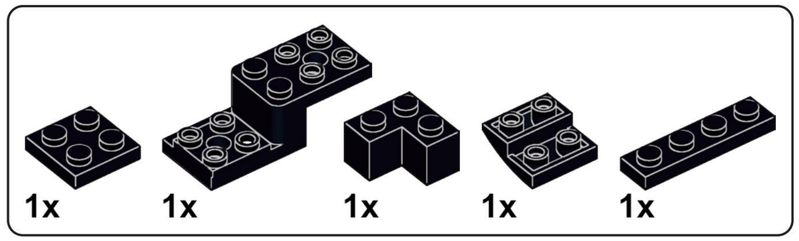

H22

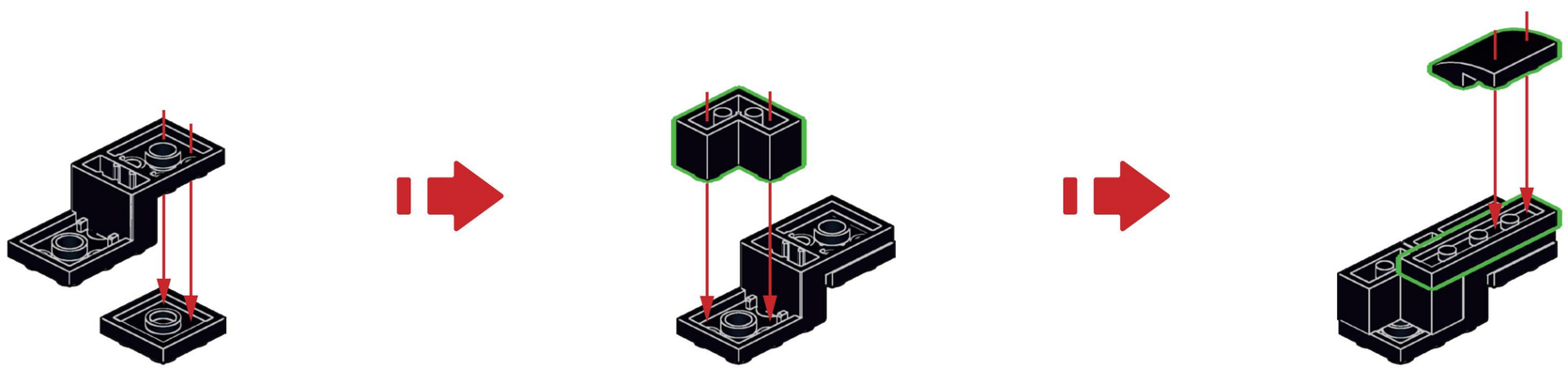

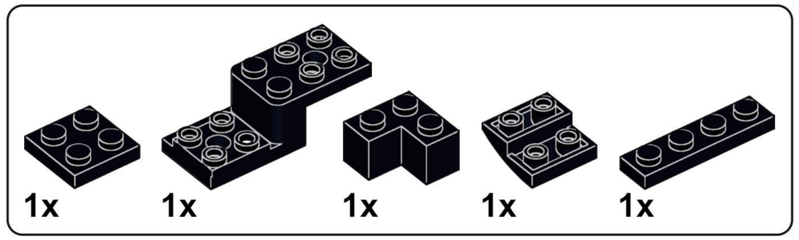

H23

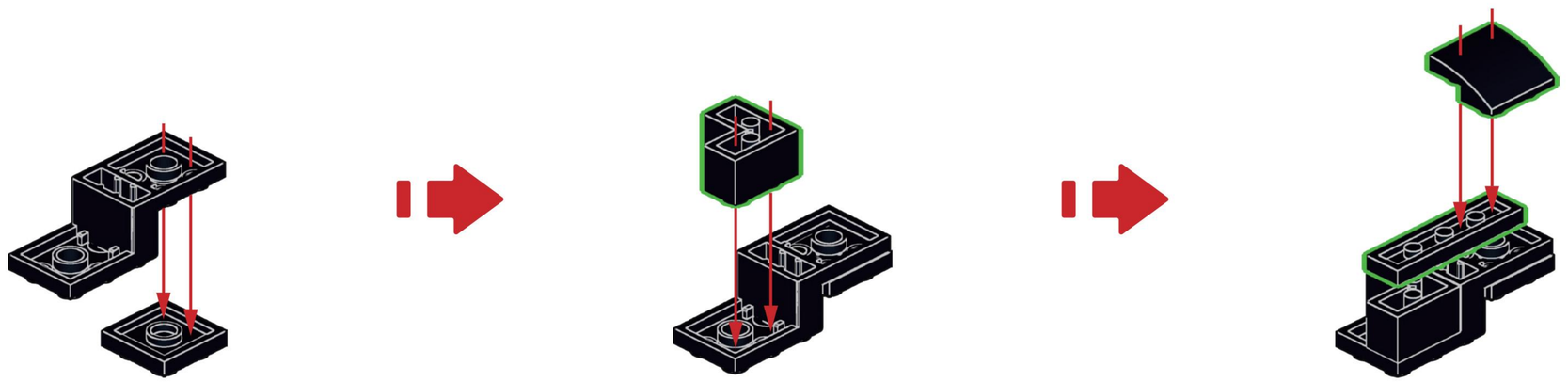

H24

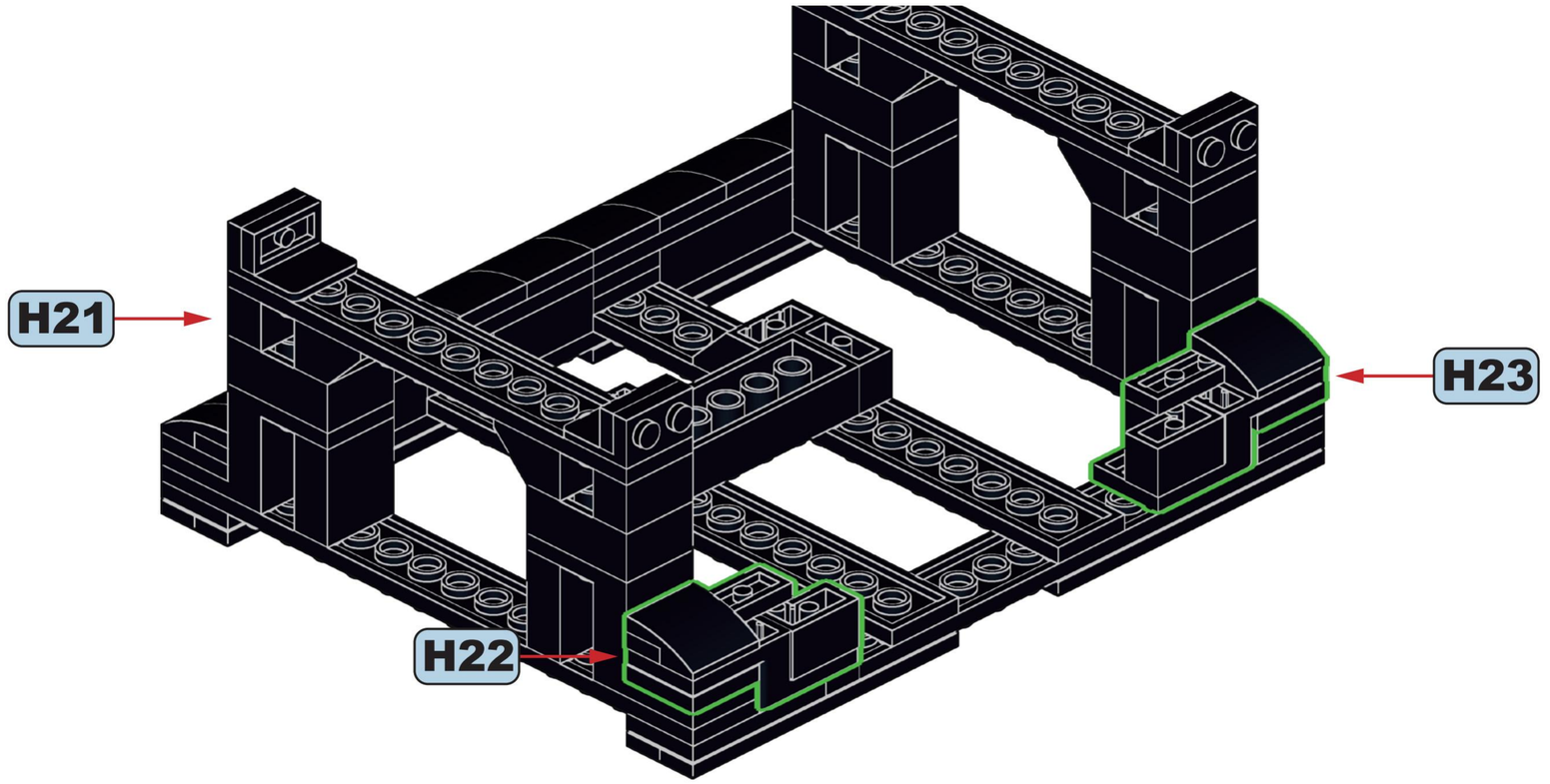

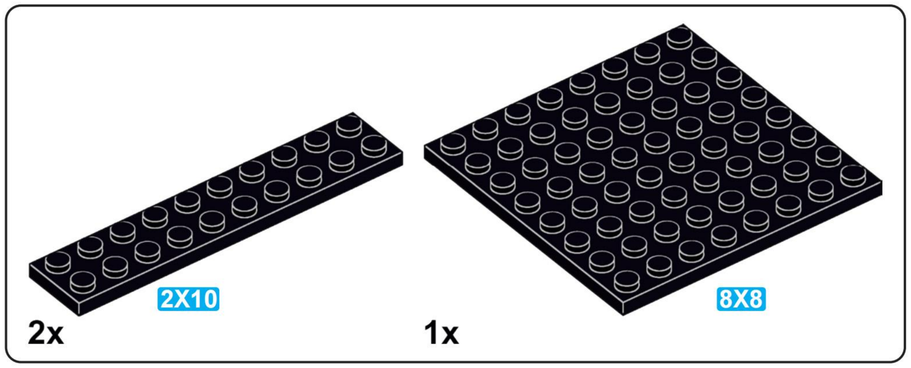

H25

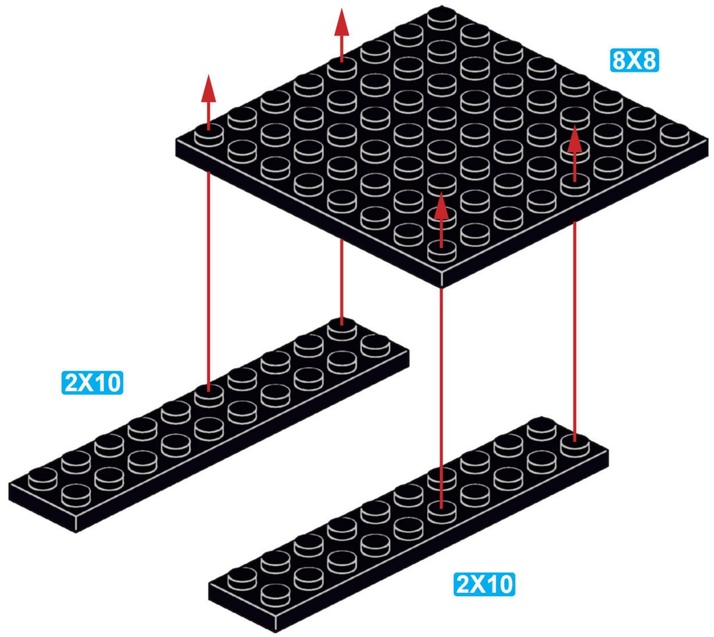

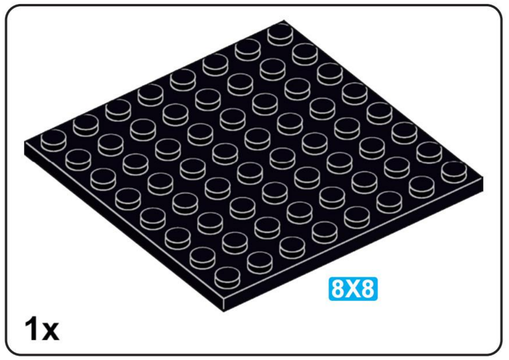

H26

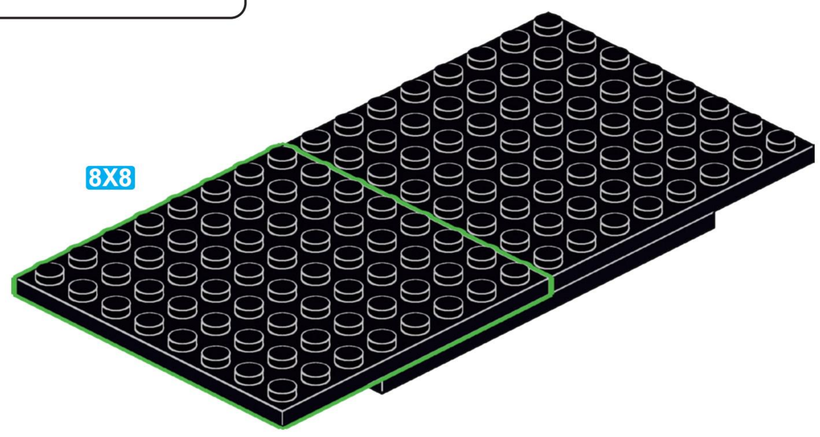

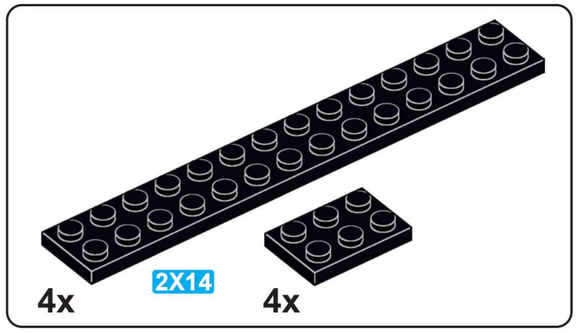

H27

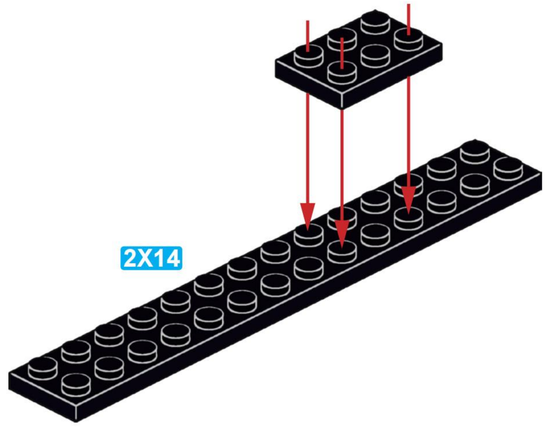

x4

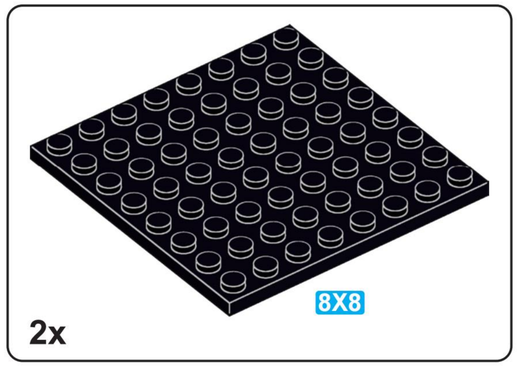

H28

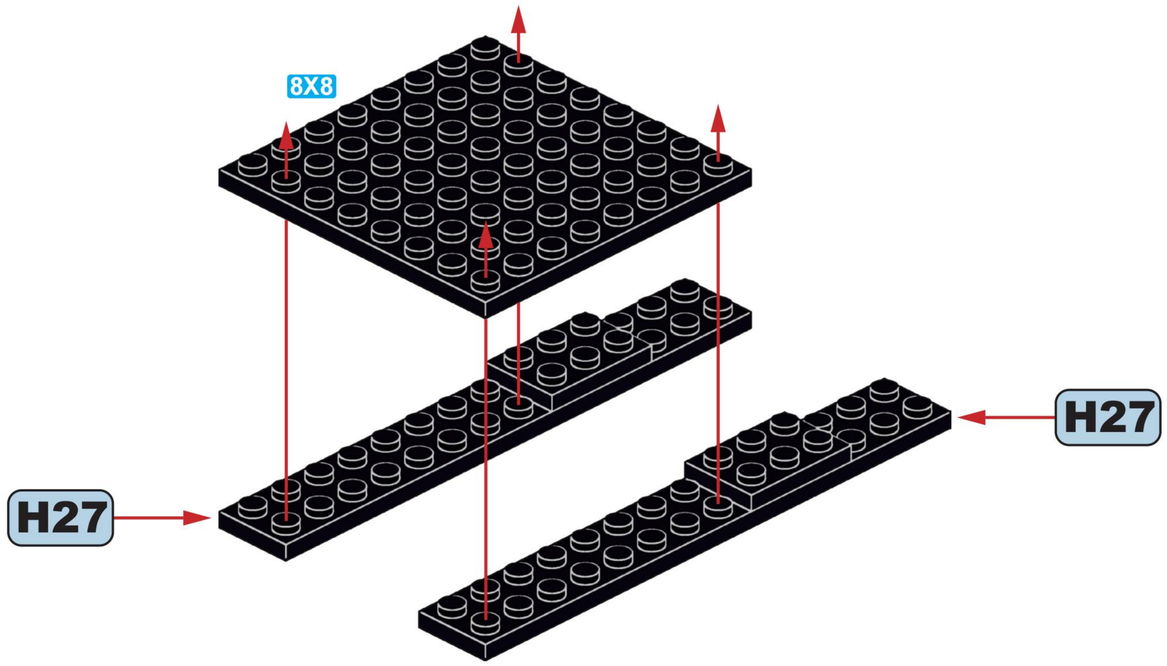

x2

H29

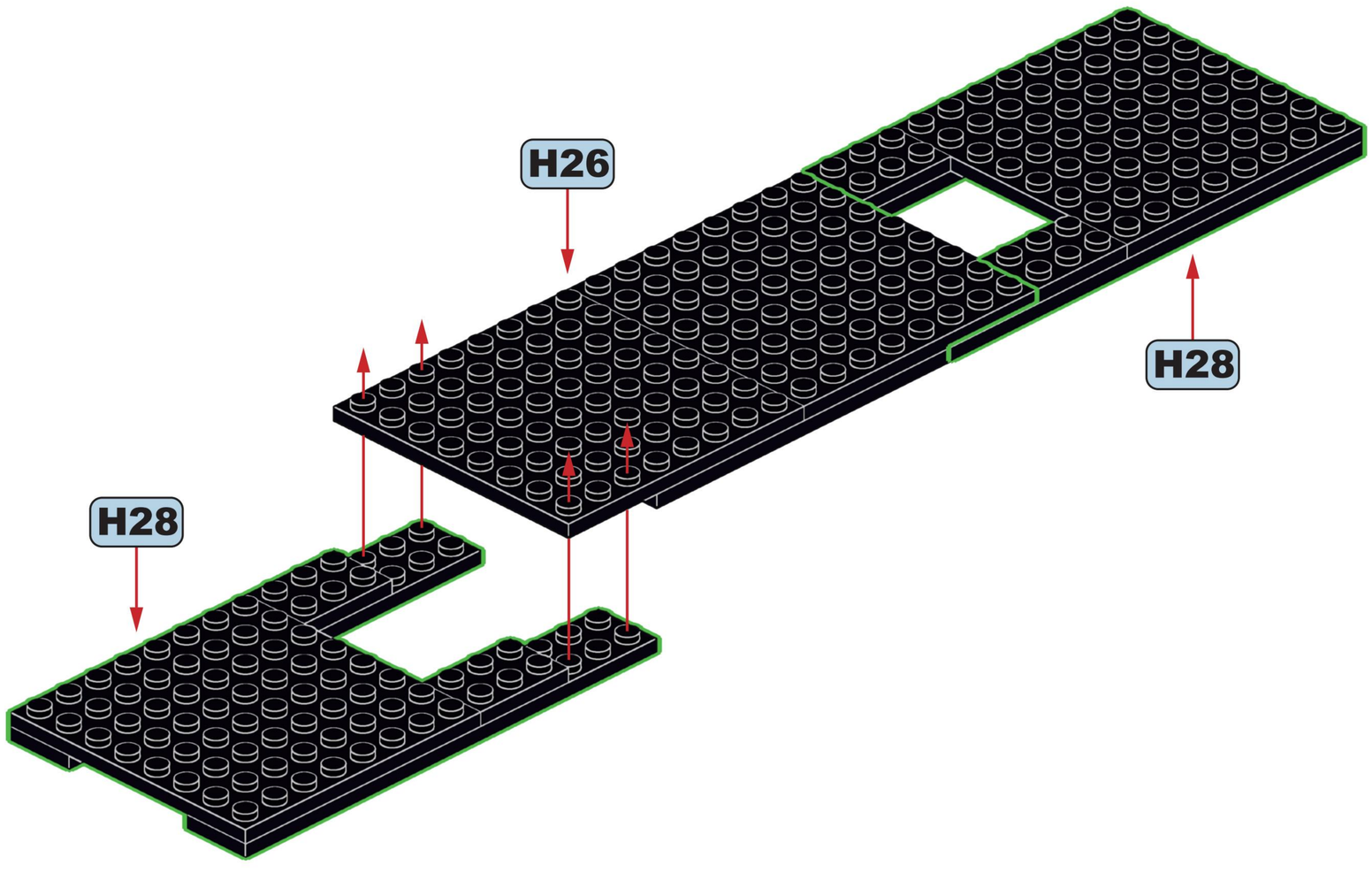

4x

H30

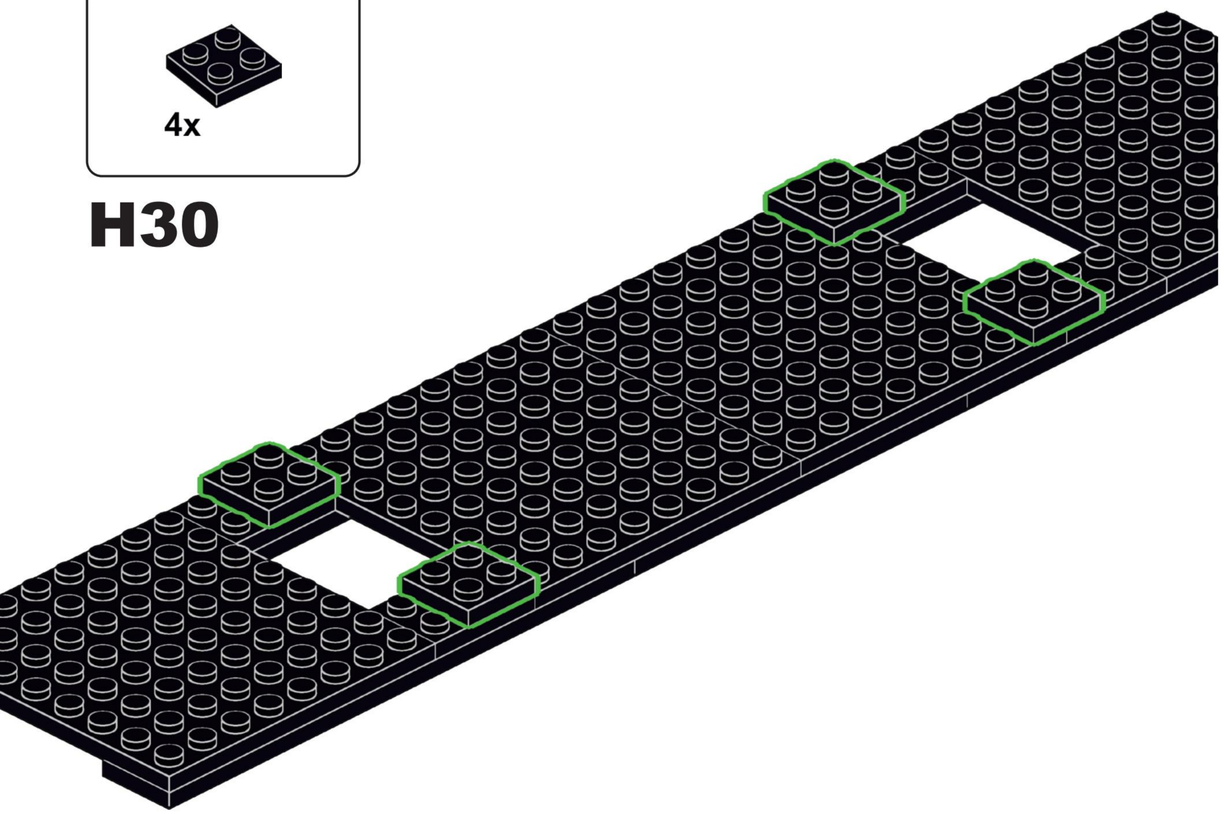

3x 1x

H31

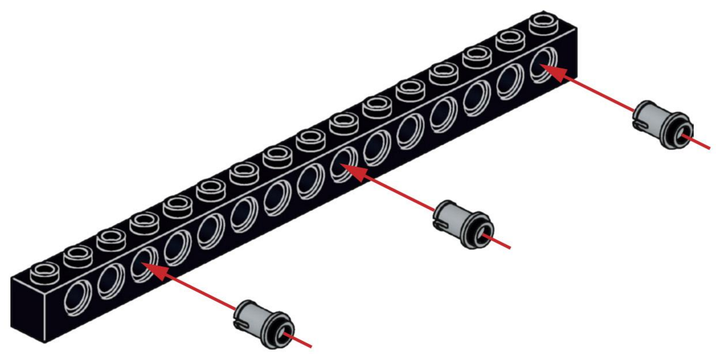

1x 1x 2X10

H32

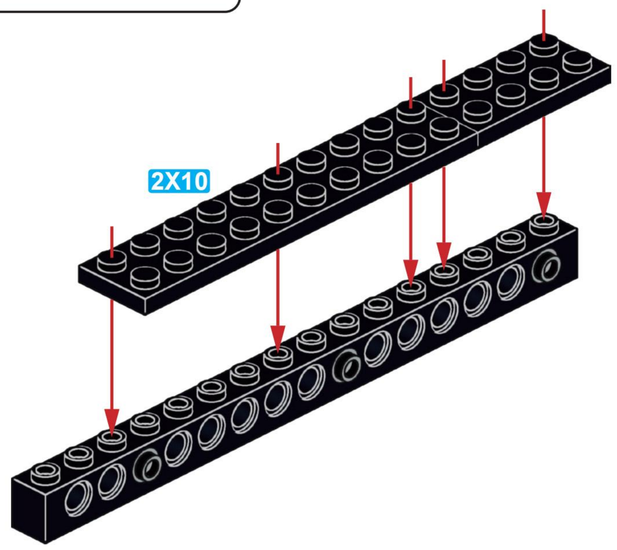

1x 1x 2X10

H33

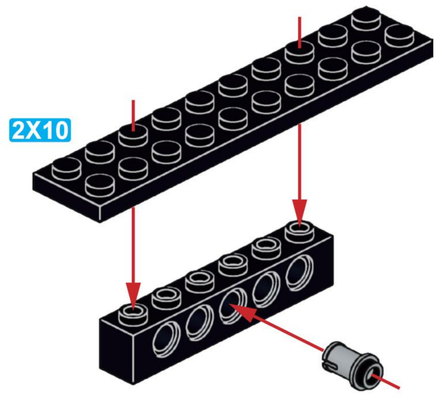

H34

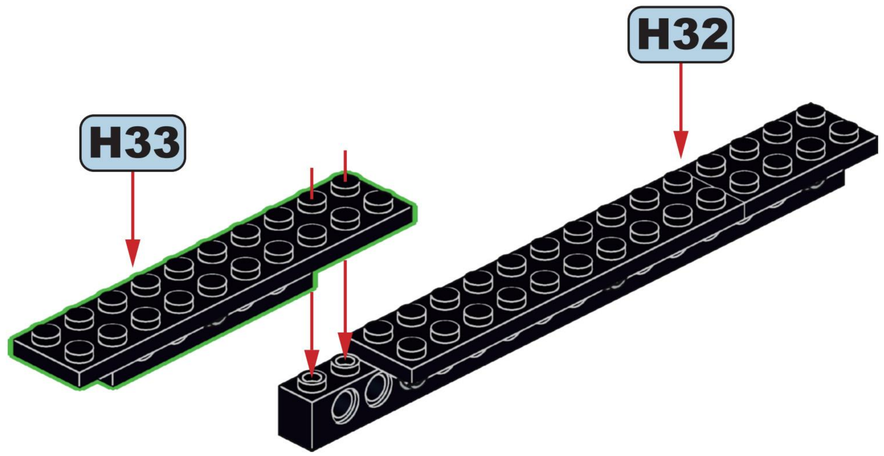

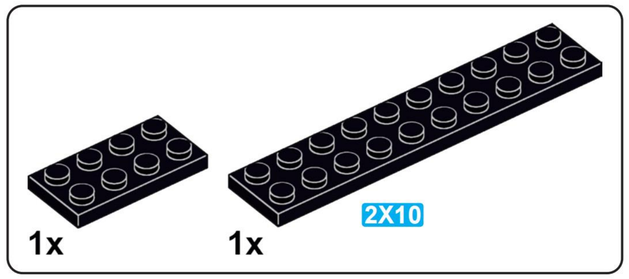

H36

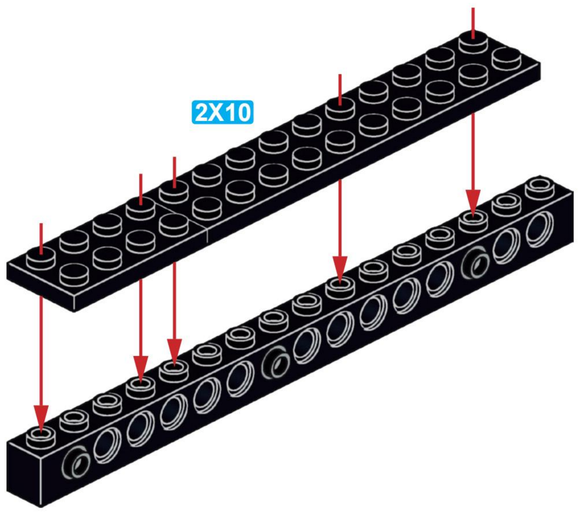

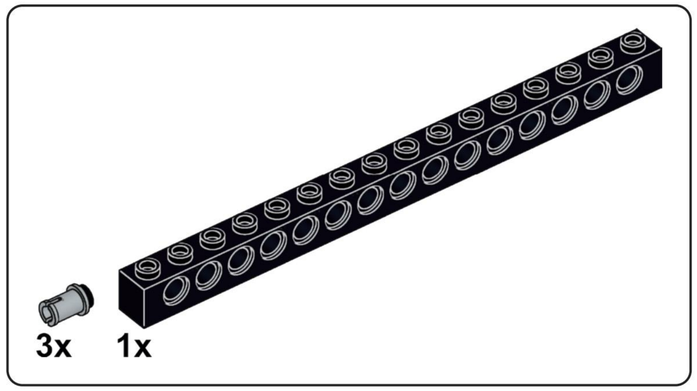

H35

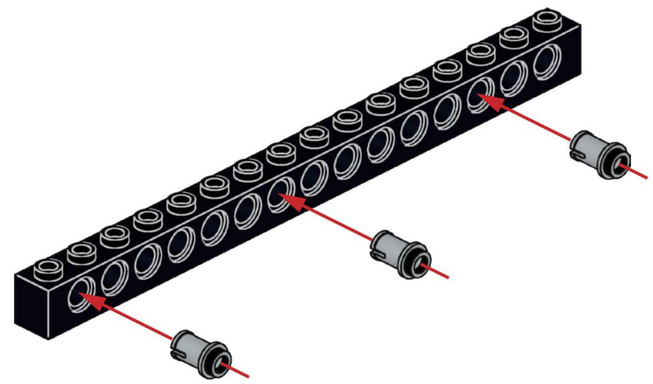

H37

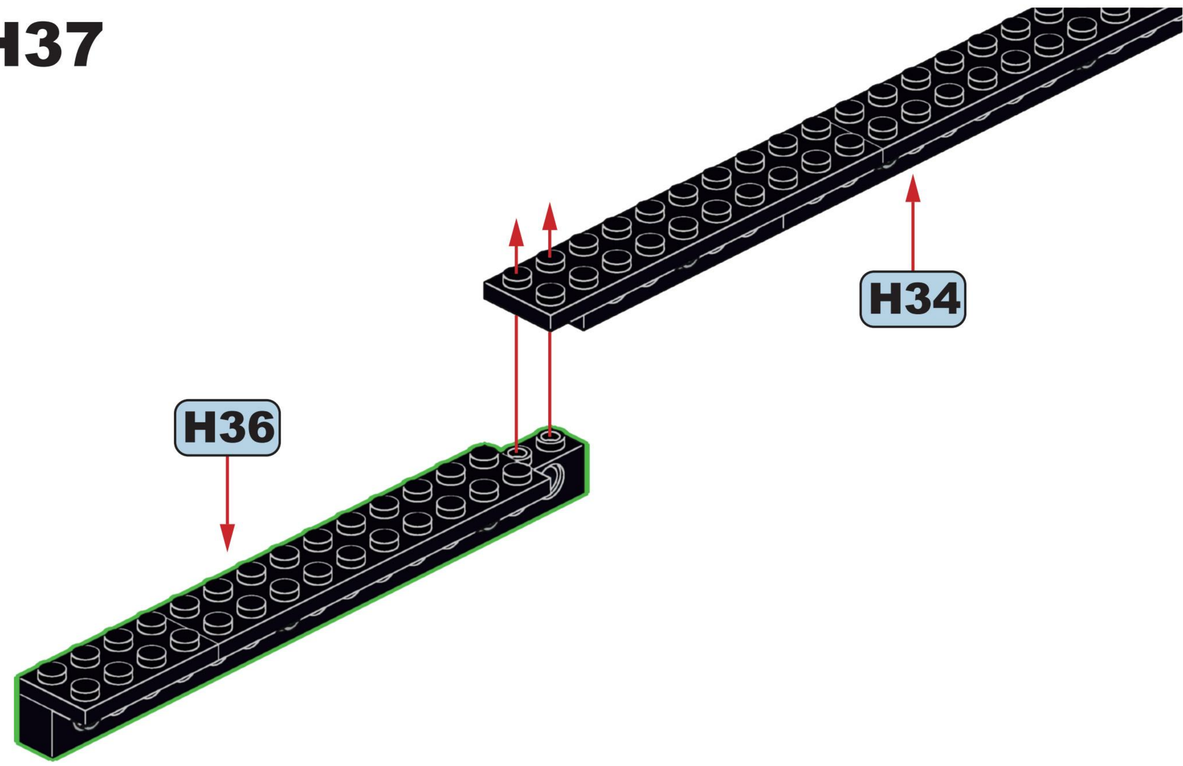

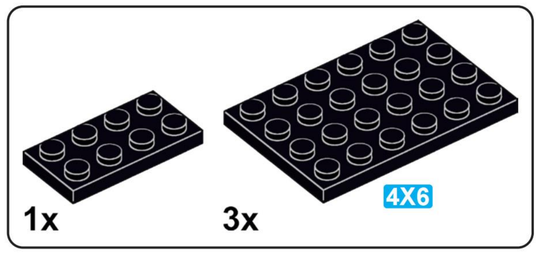

H38

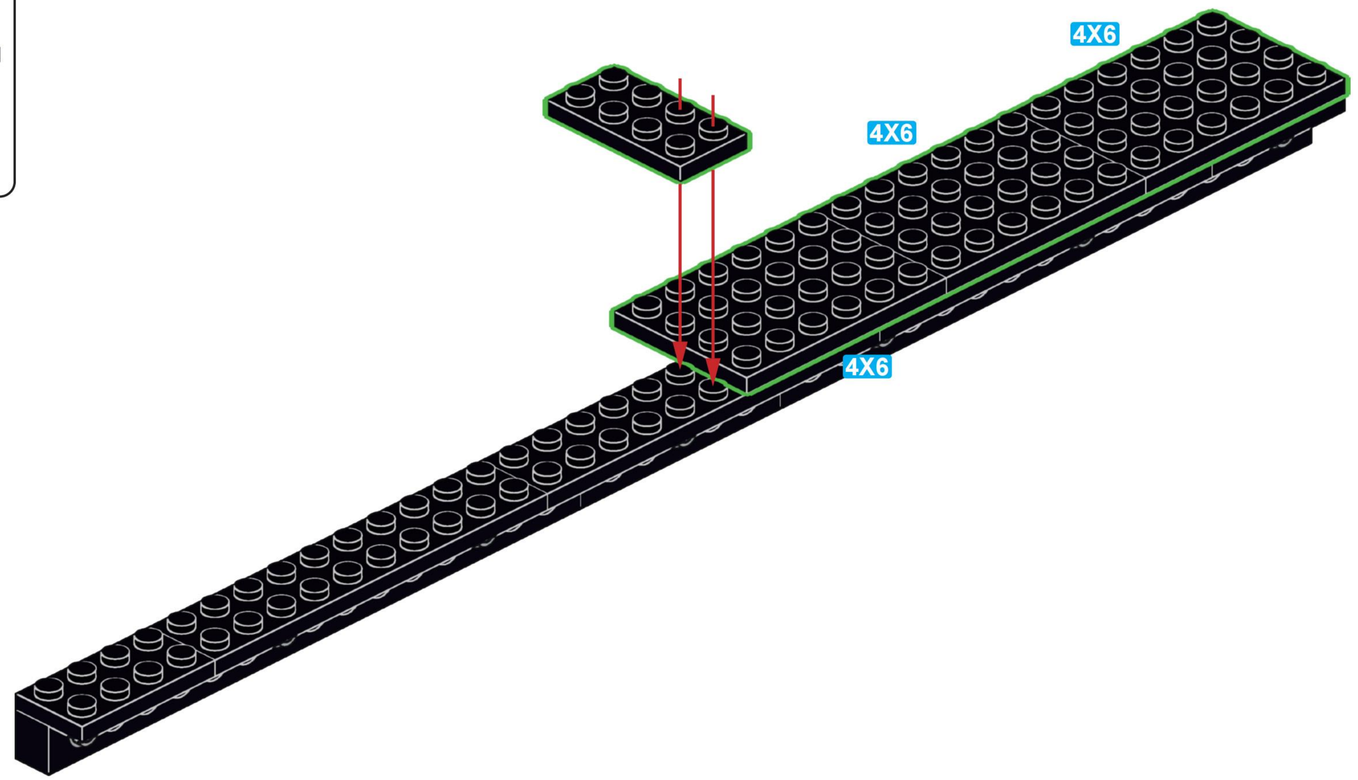

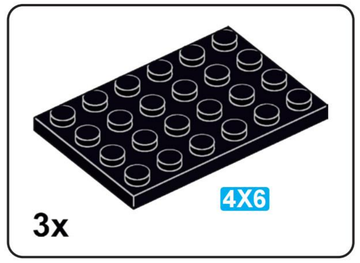

H39

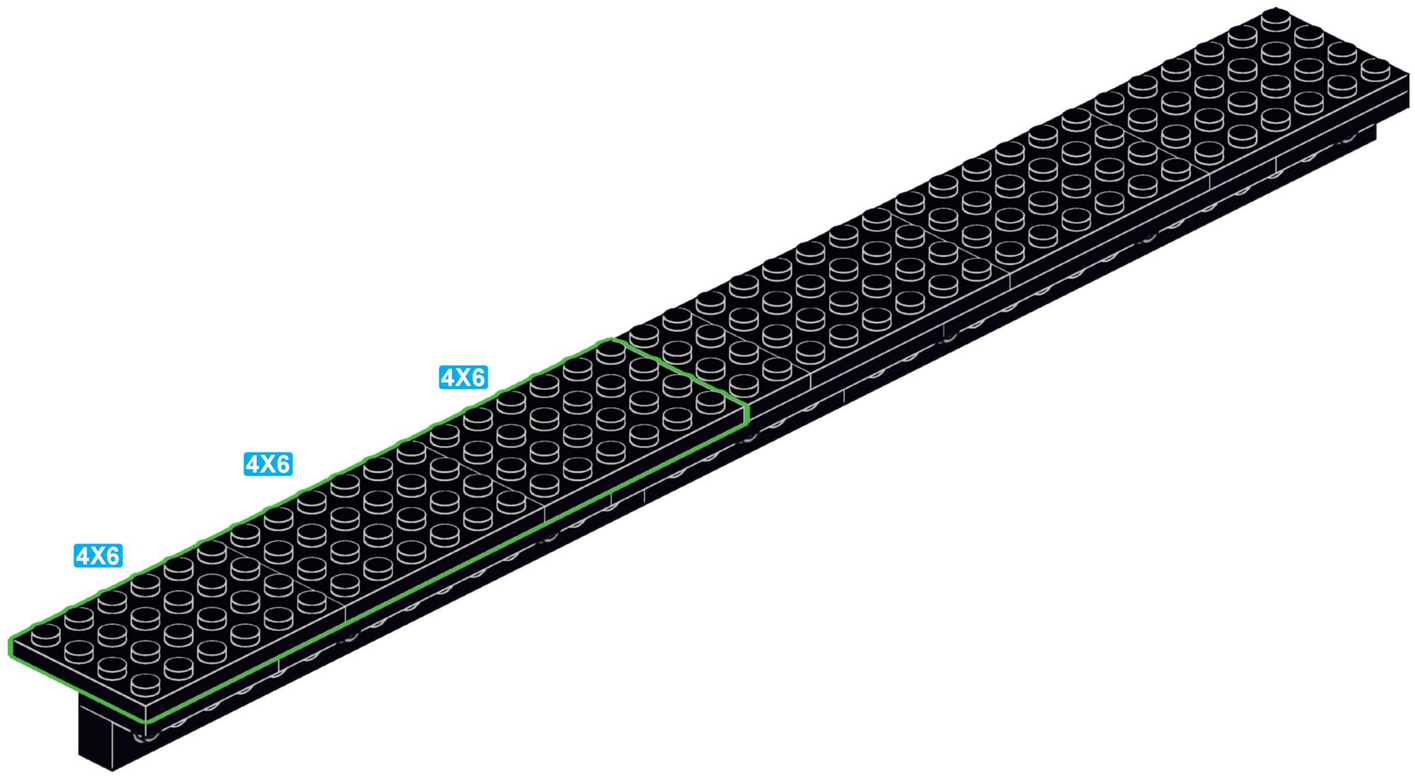

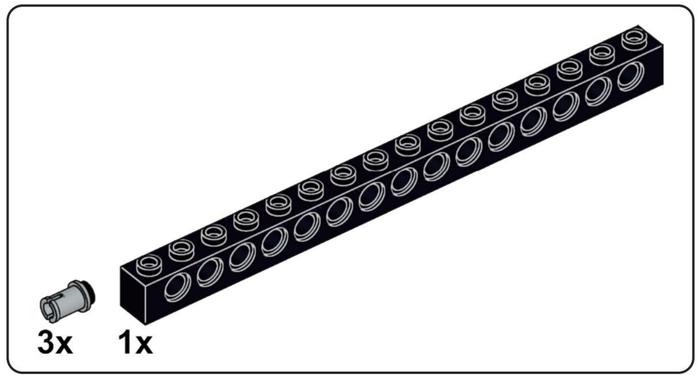

H40

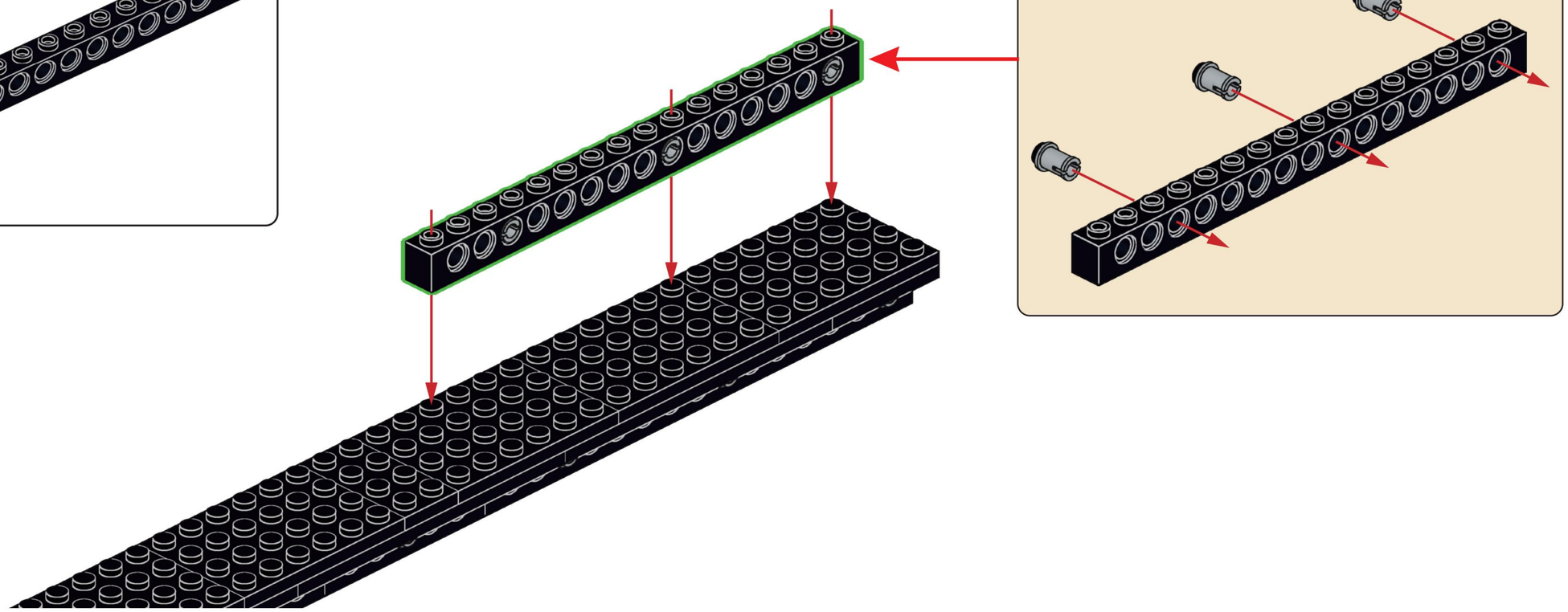

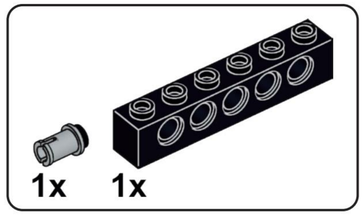

H41

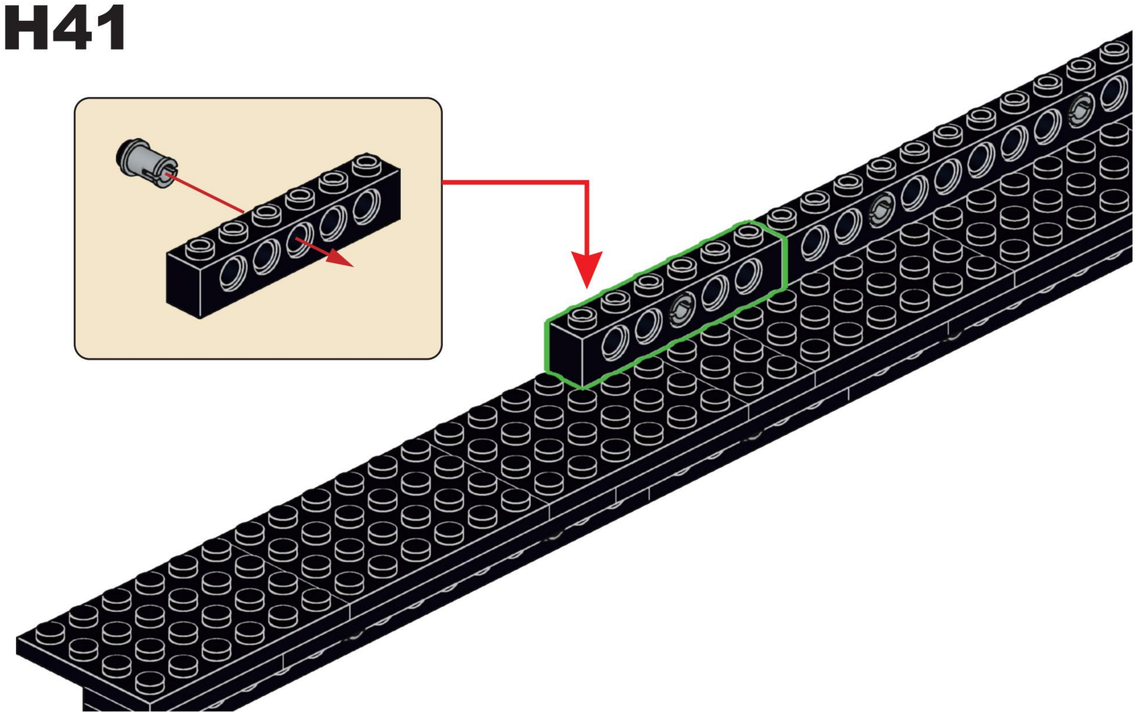

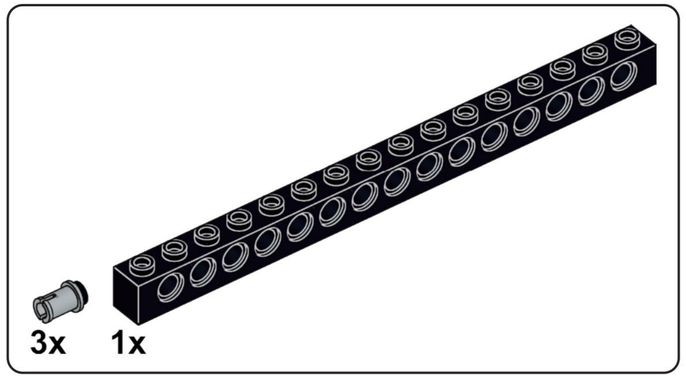

H42

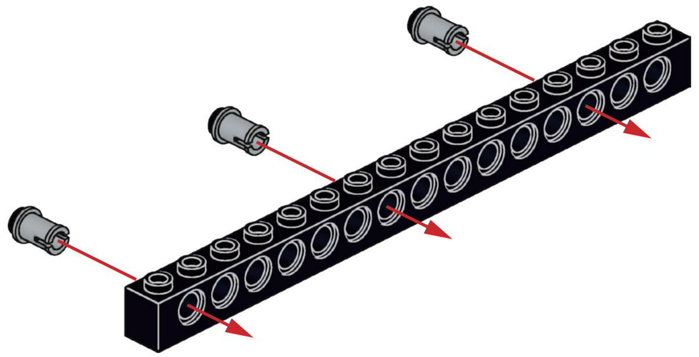

H43

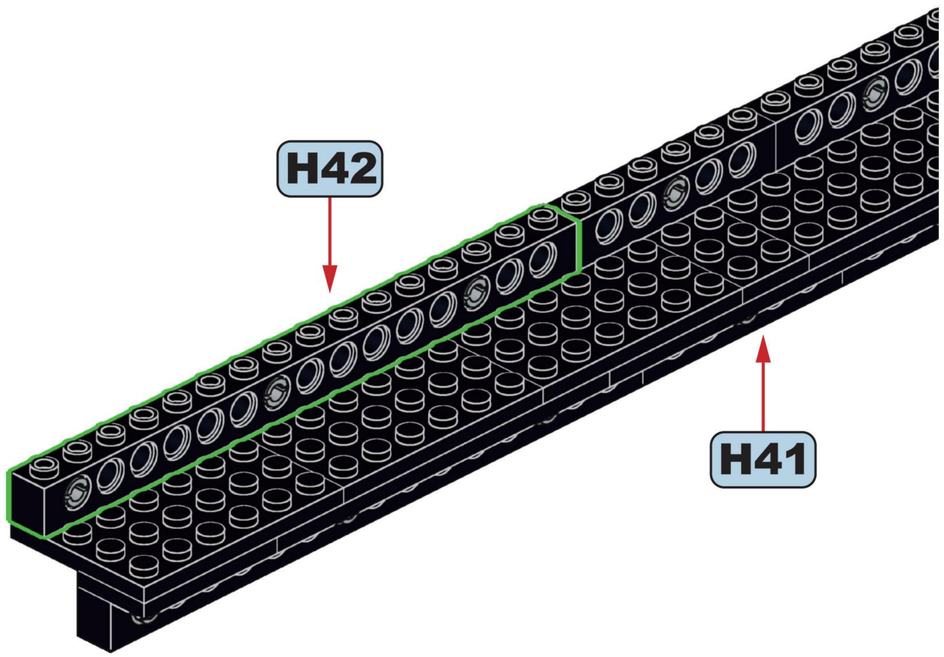

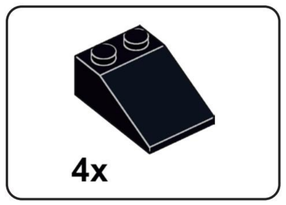

H44

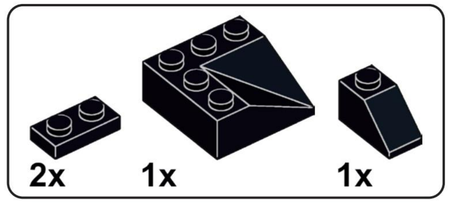

H45

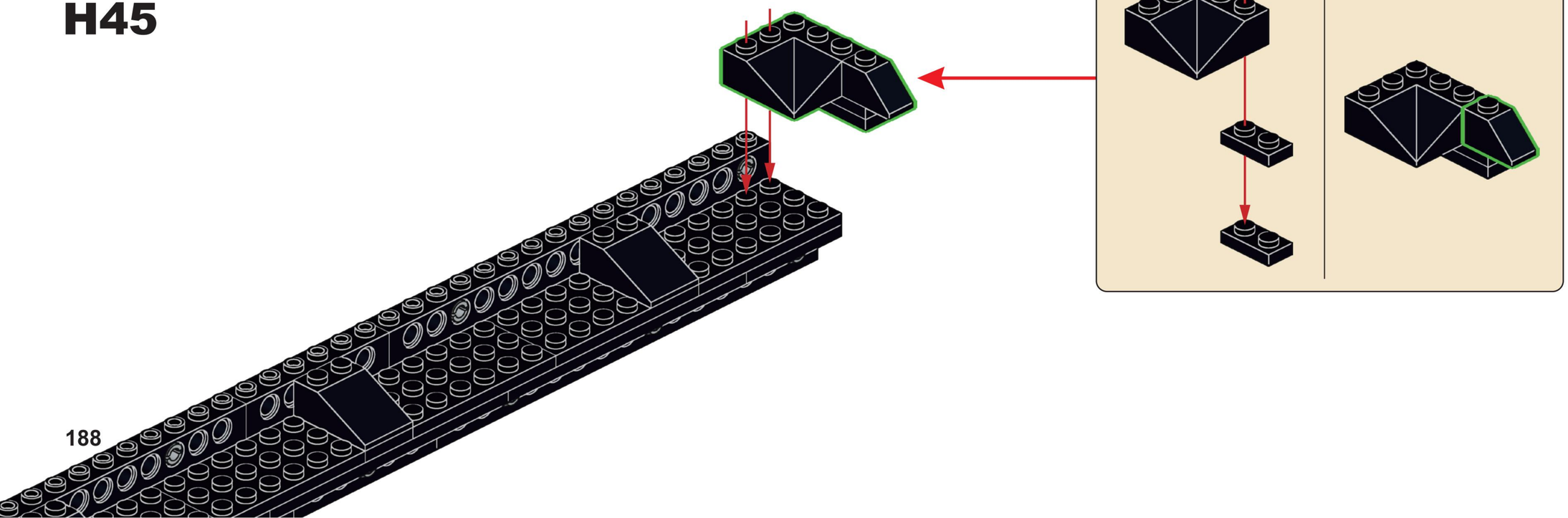

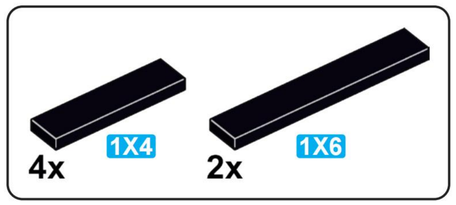

H46

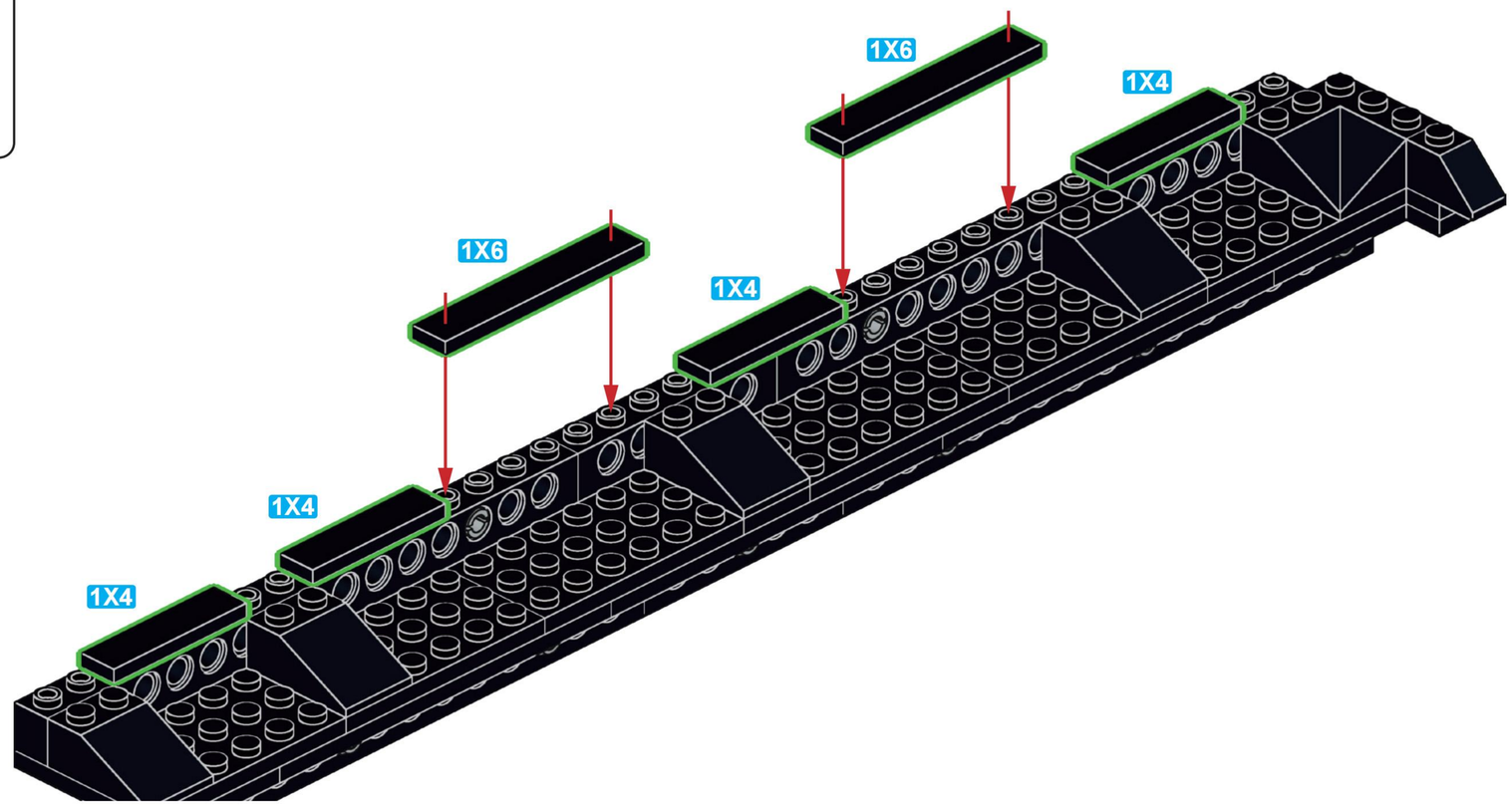

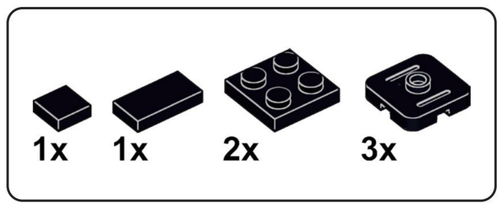

H47

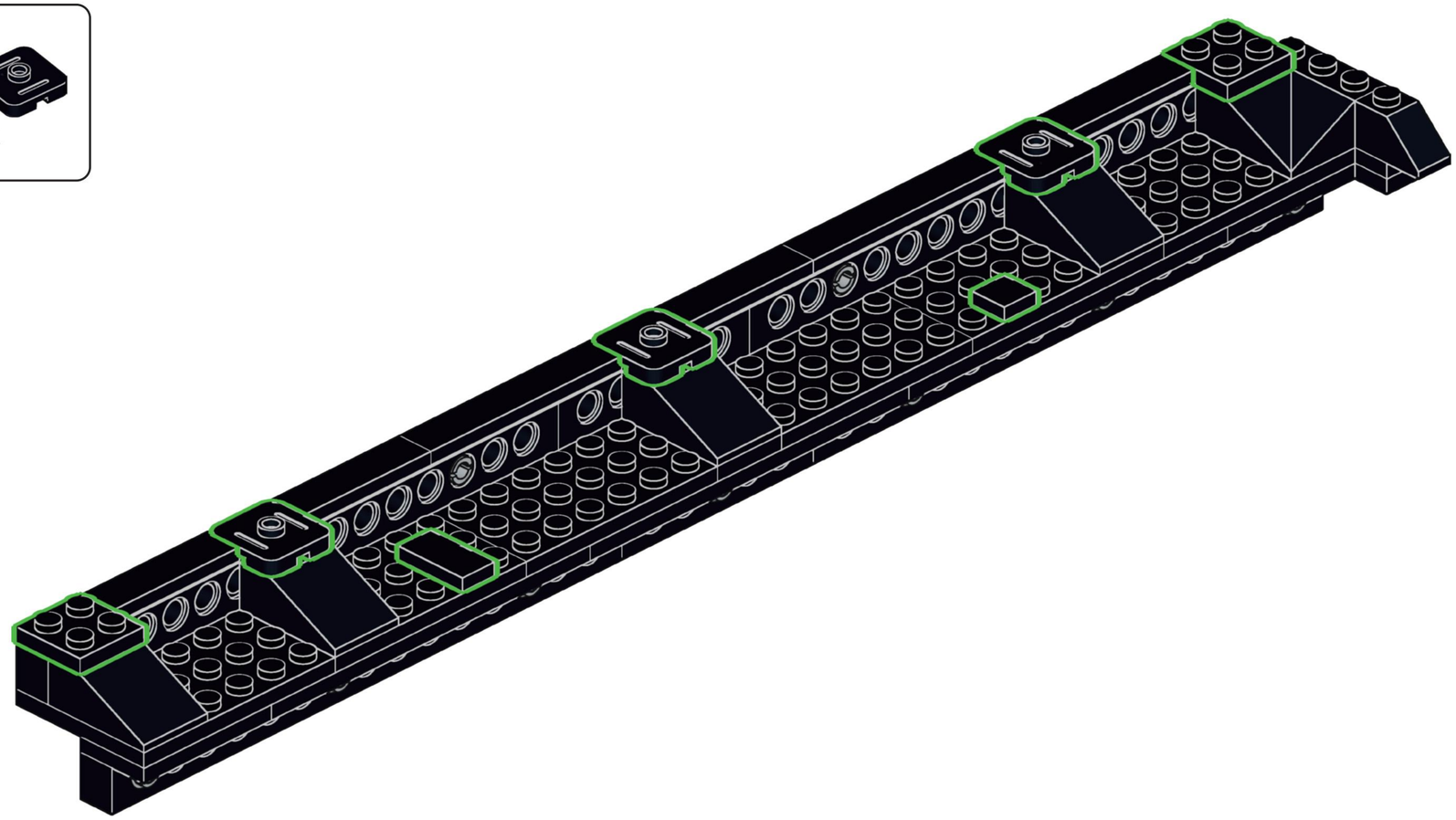

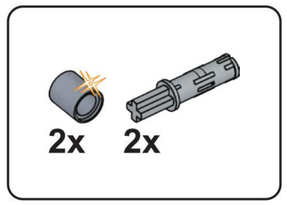

H48



x2

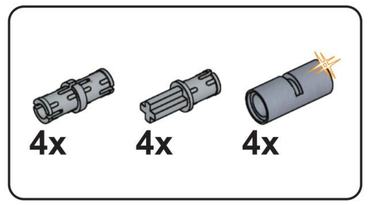

H49



x4

H50

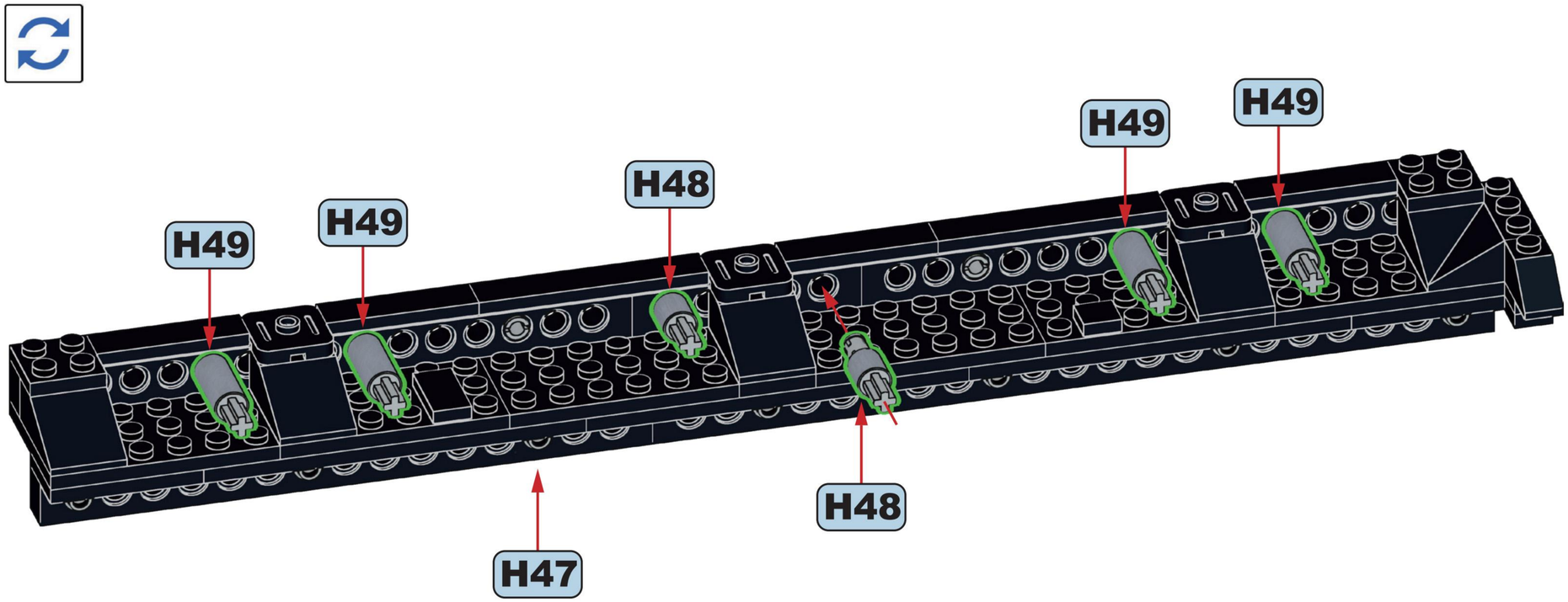

H51

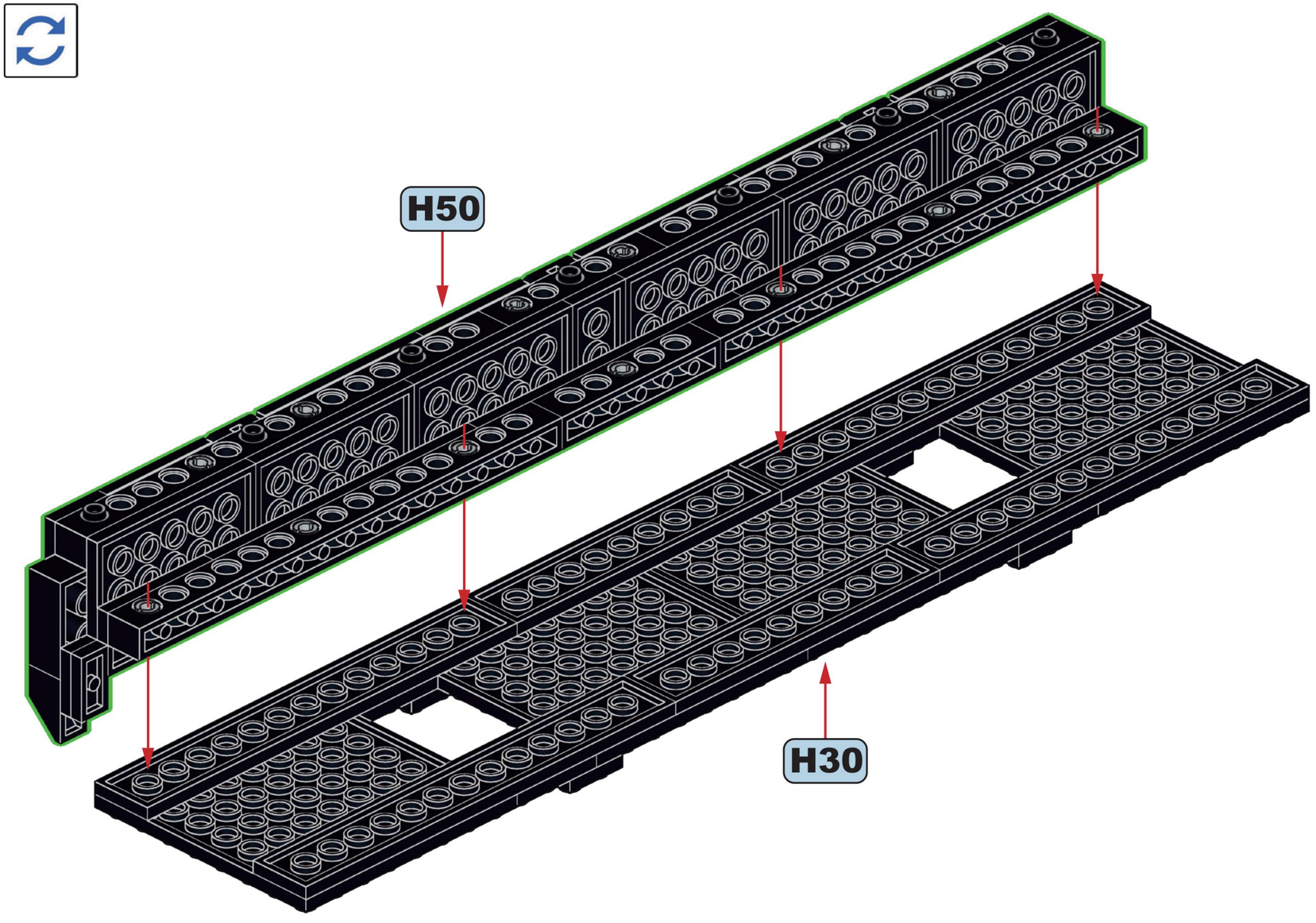

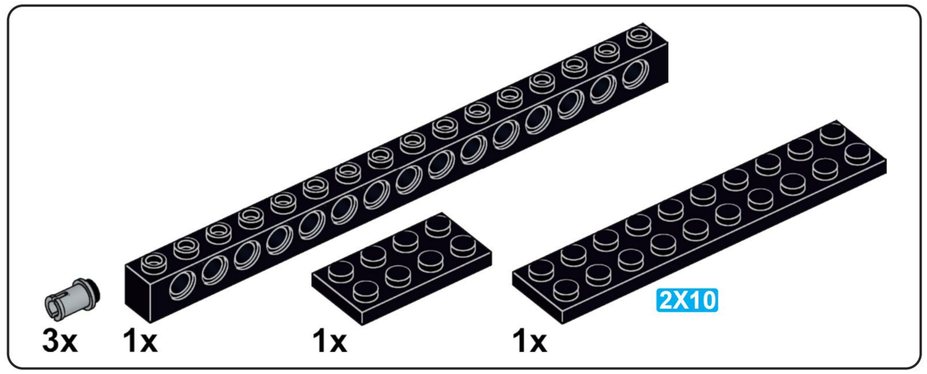

H52

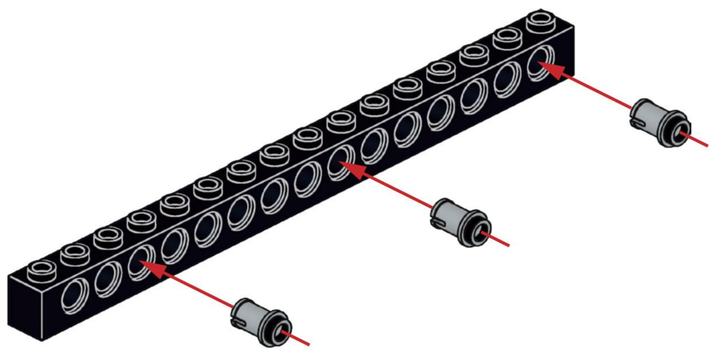

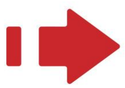

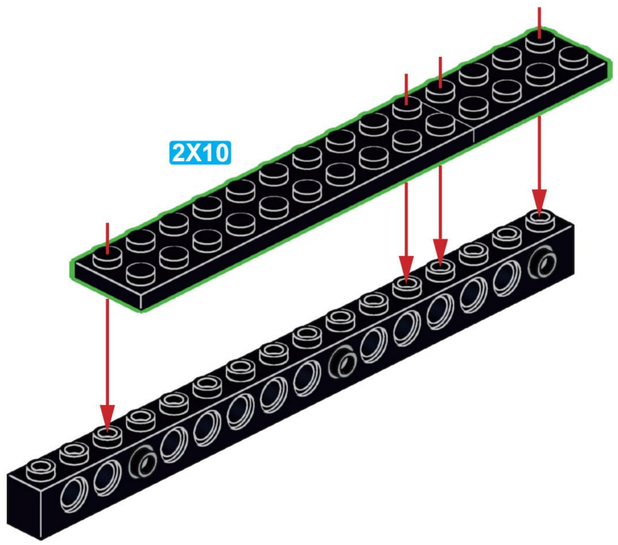

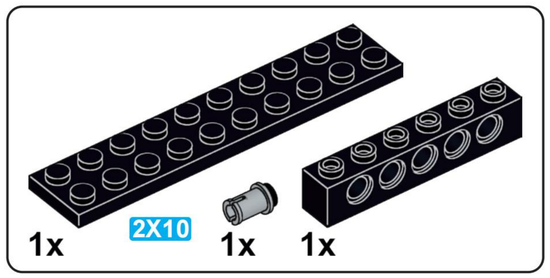

H53

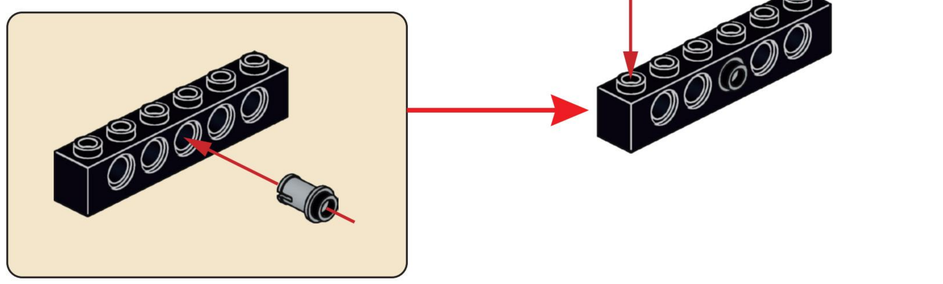

H54

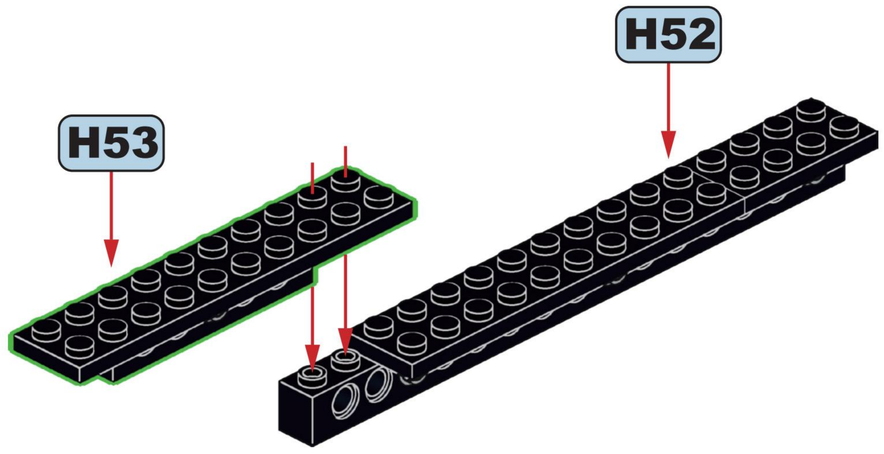

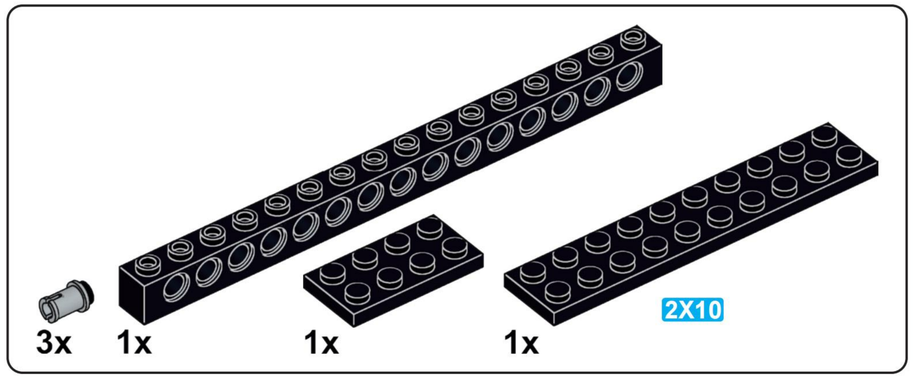

H55

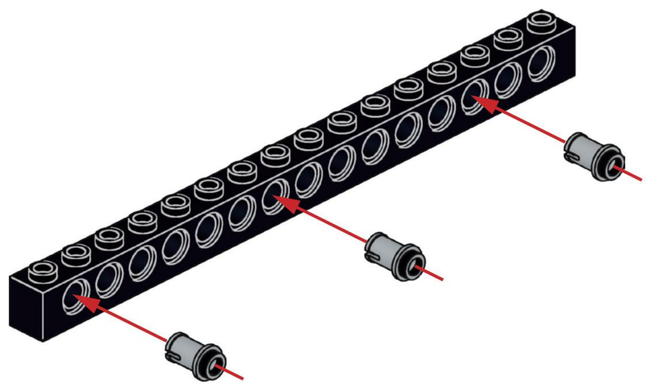

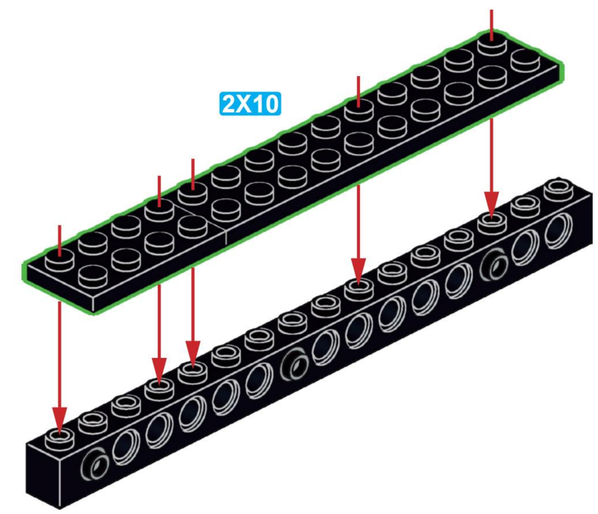

H56

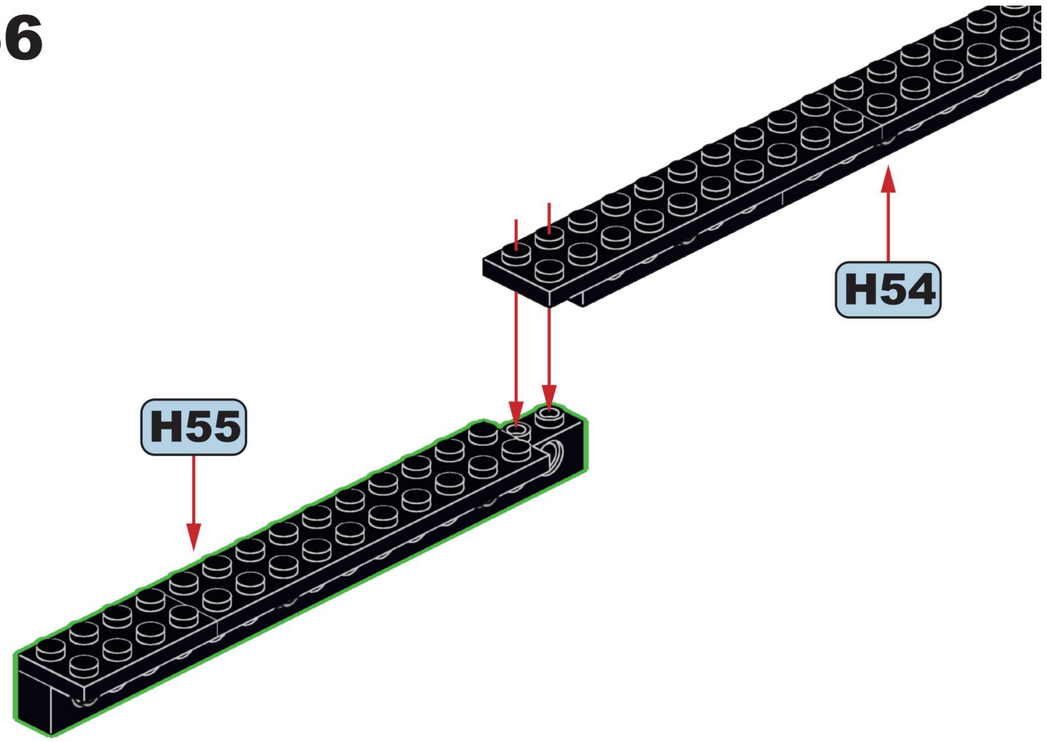

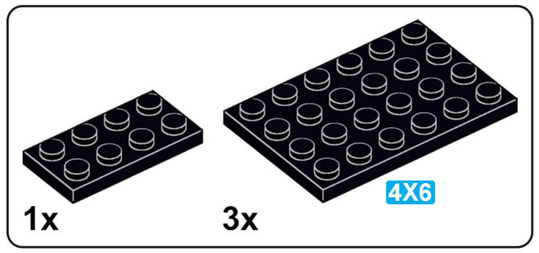

H57

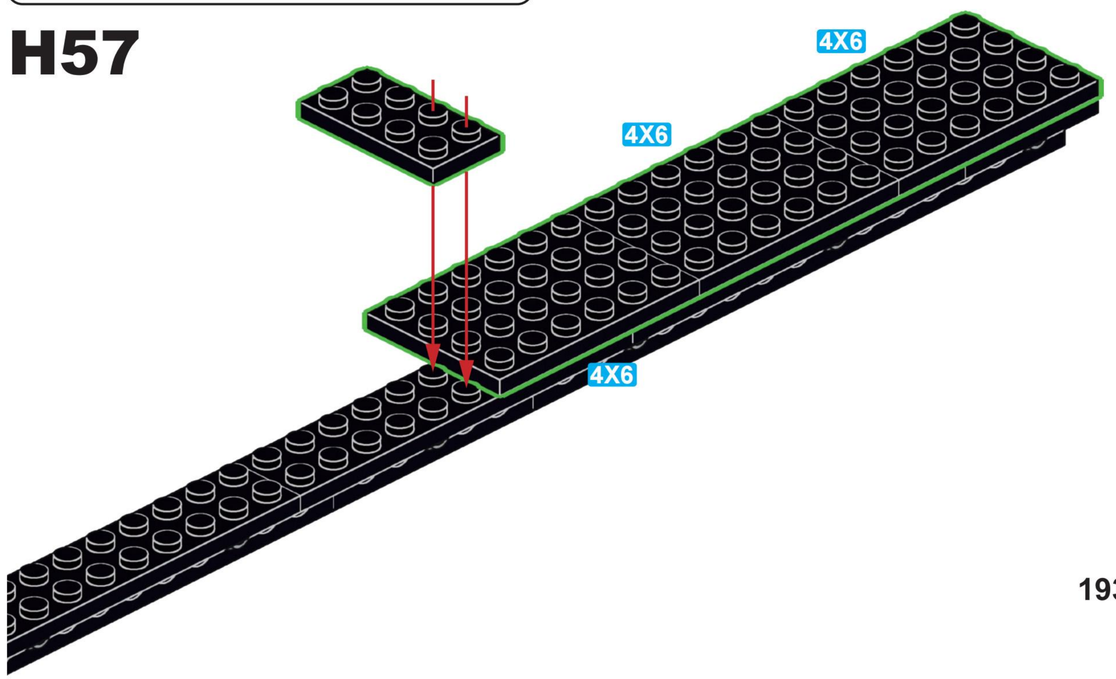

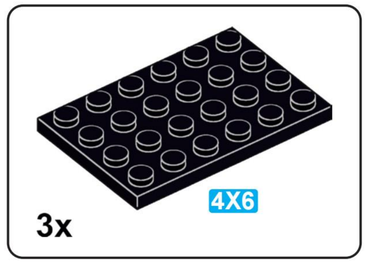

H58

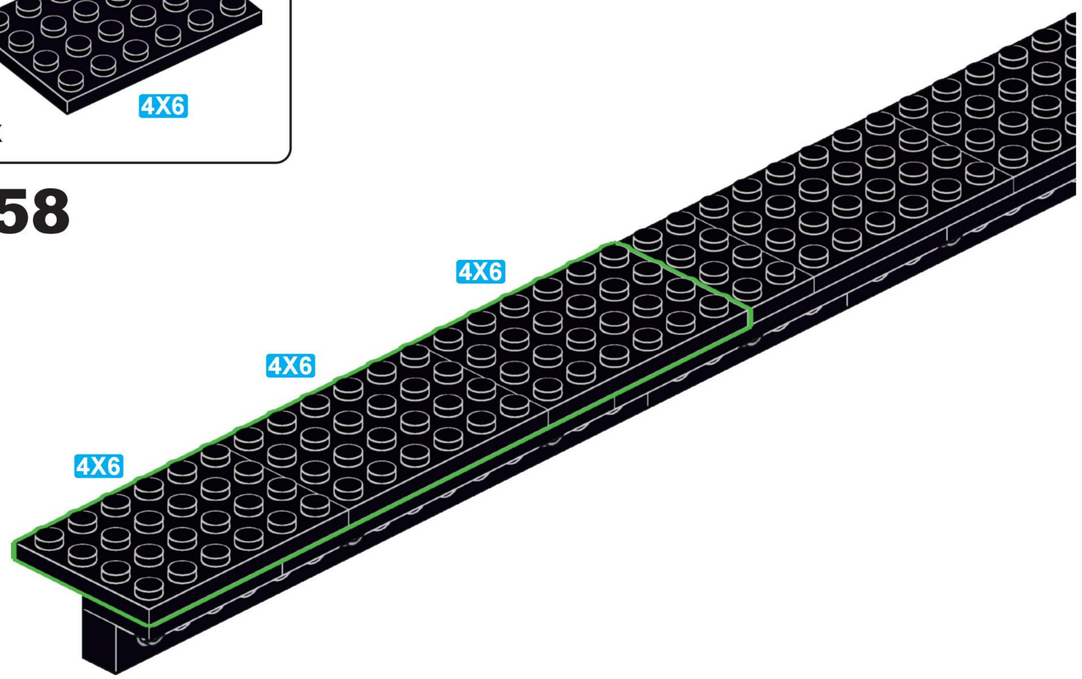

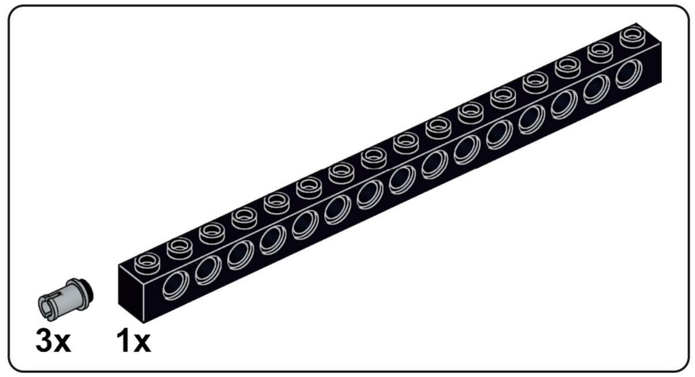

H59

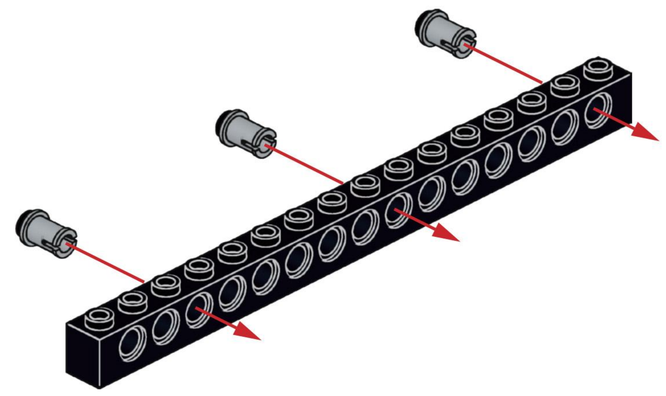

H60

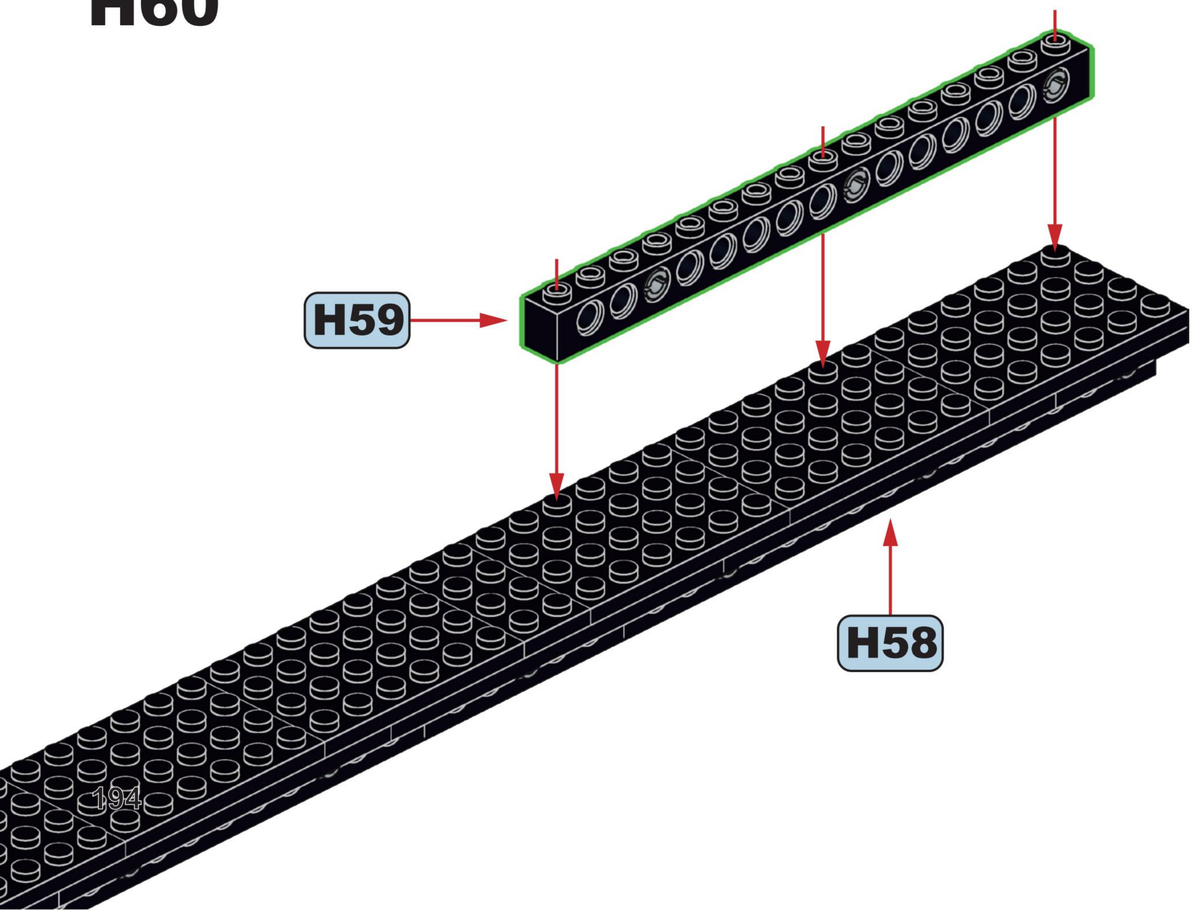

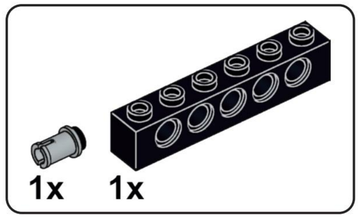

H61

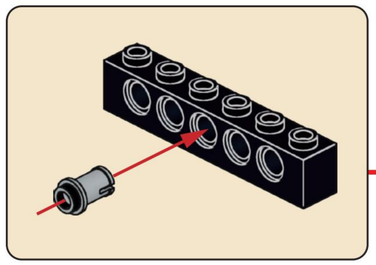

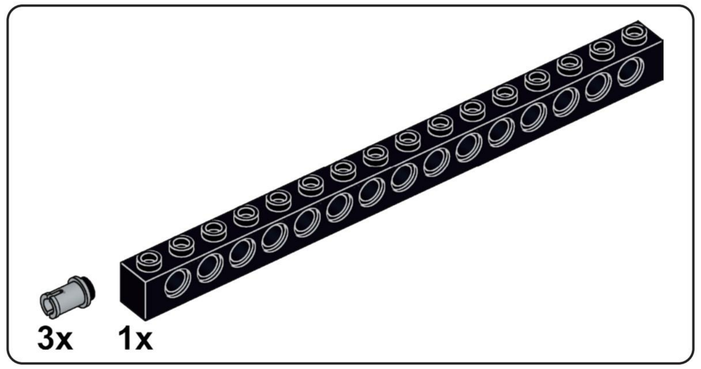

H62

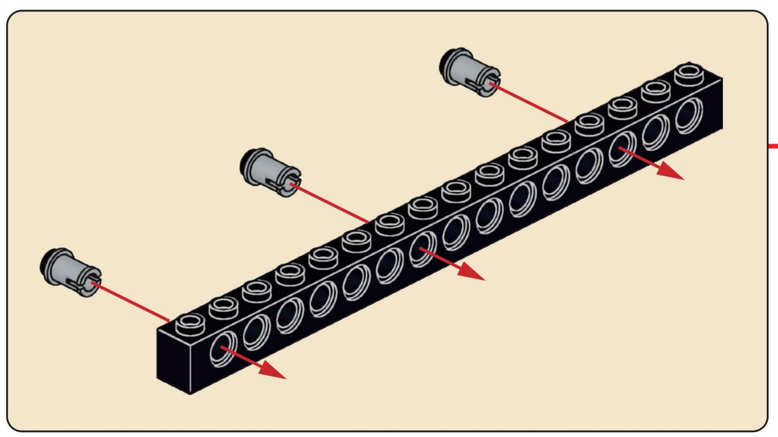

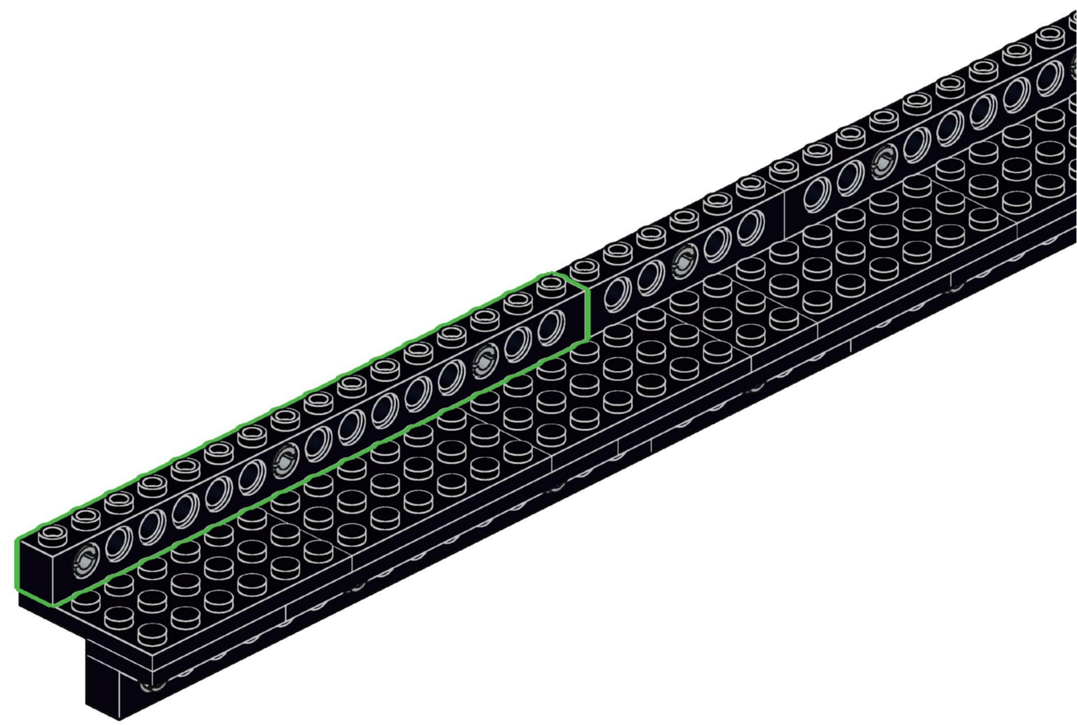

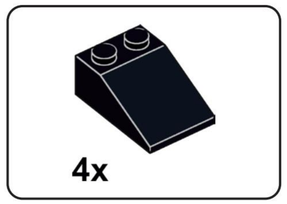

H63

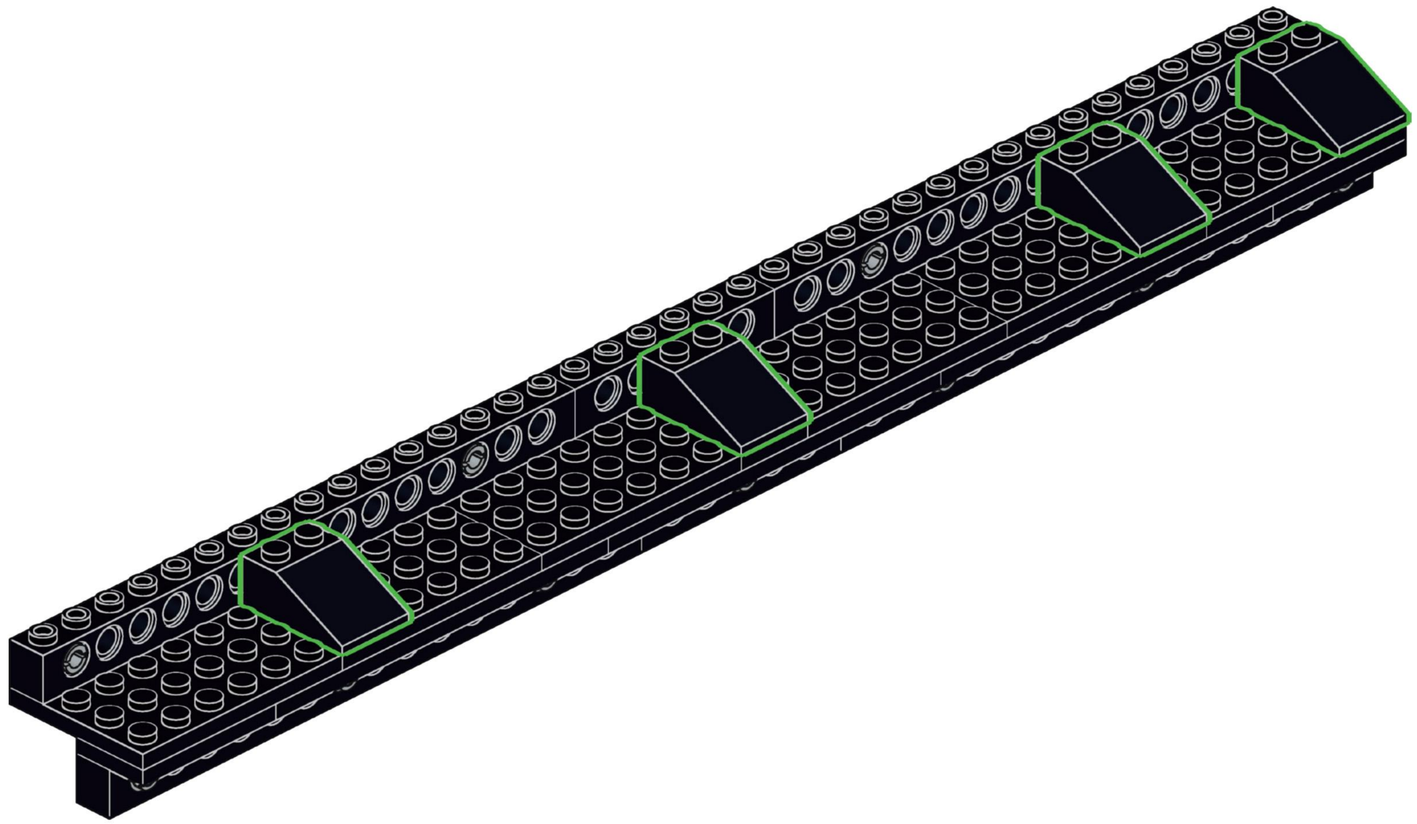

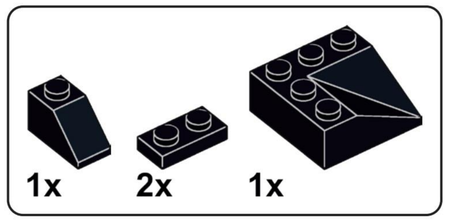

H64

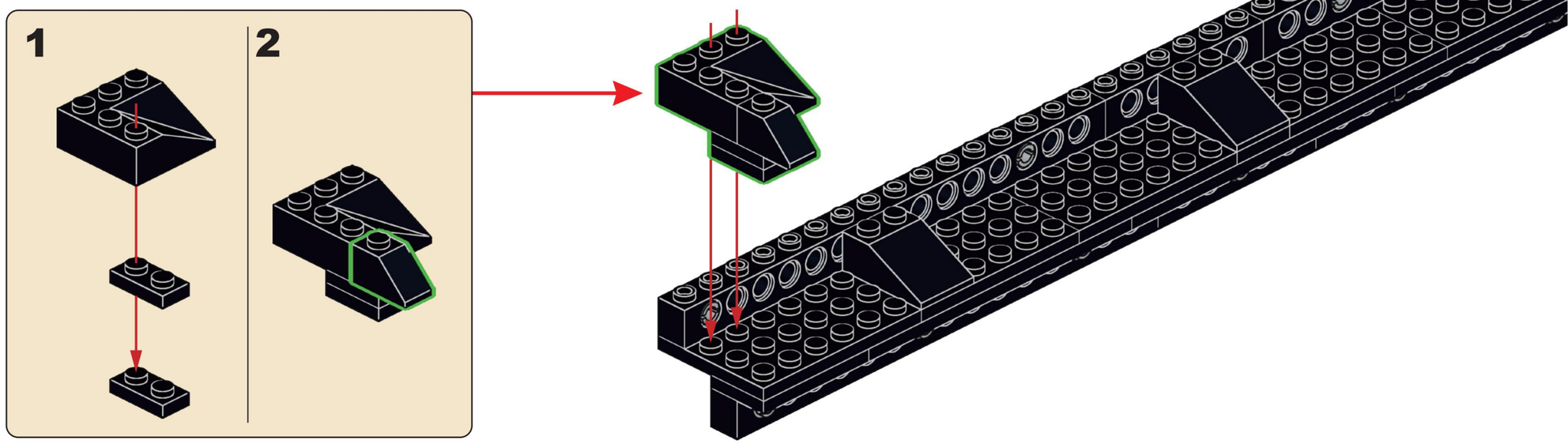

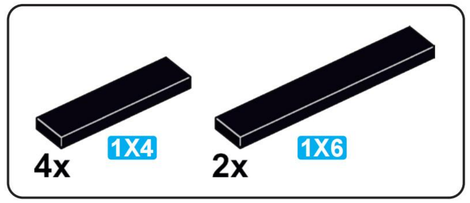

H65

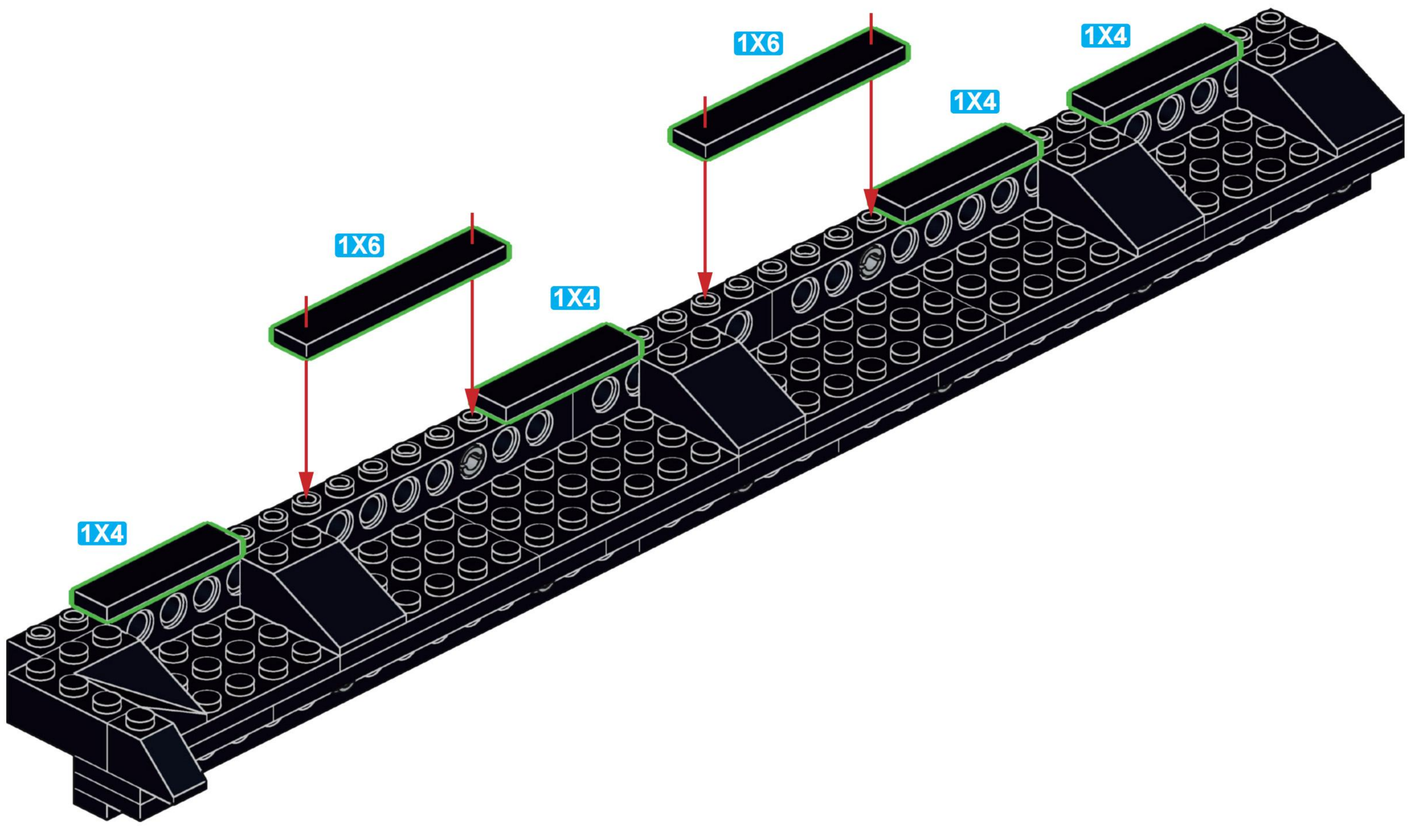

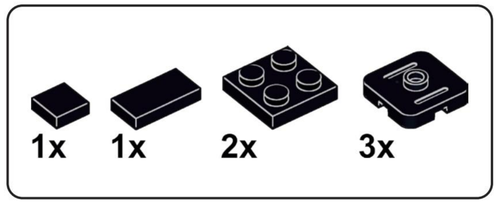

H66

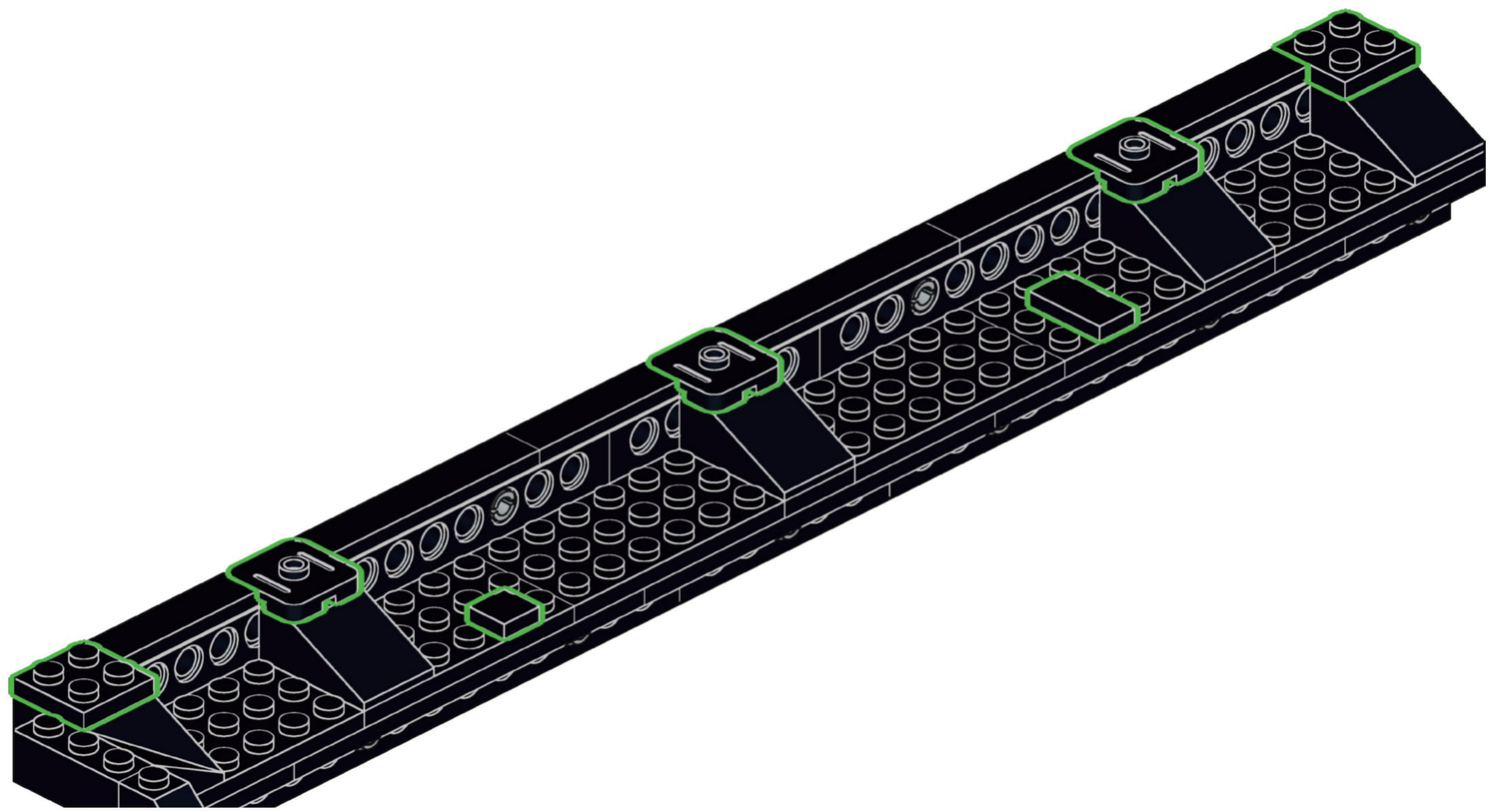

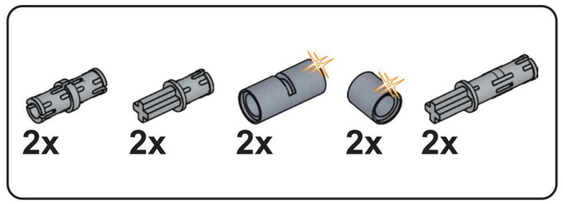

H67

H68

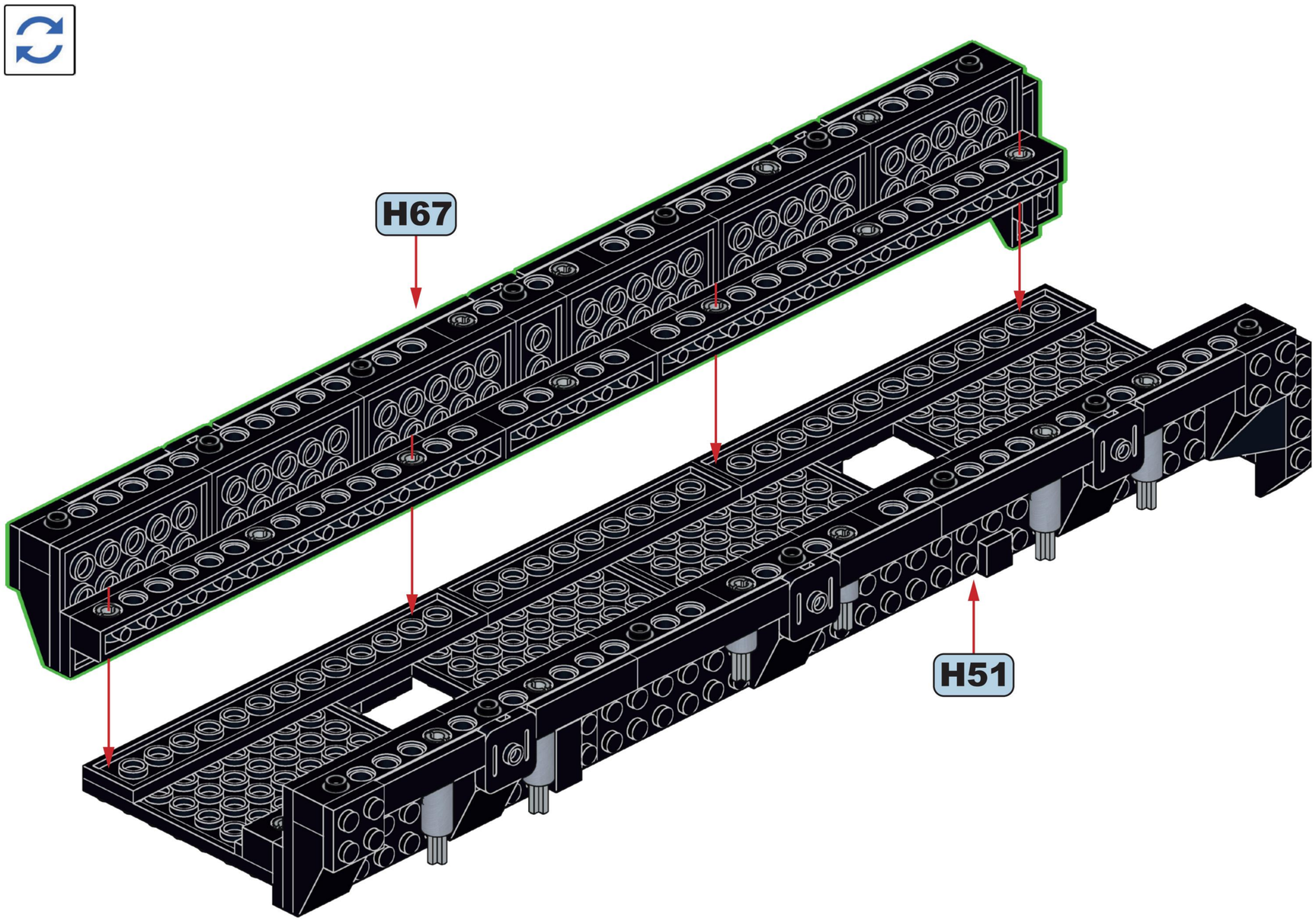

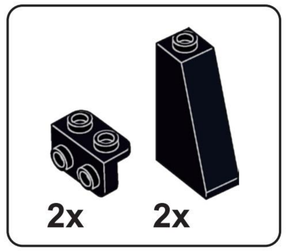

H69

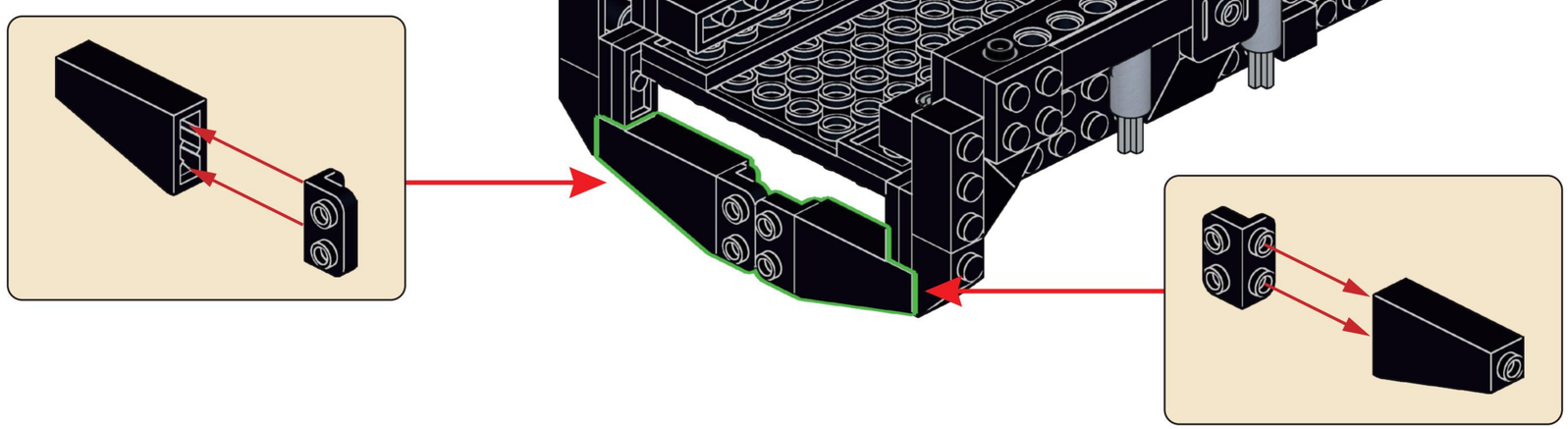

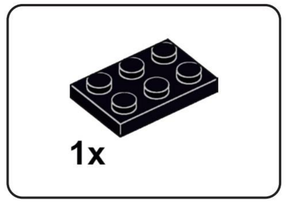

H70

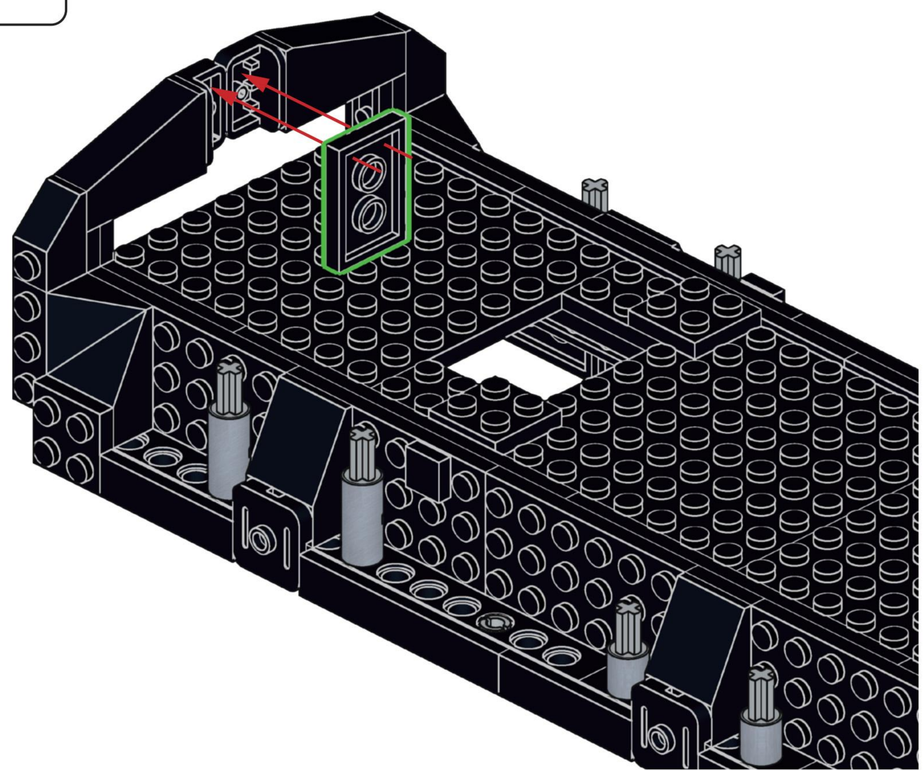

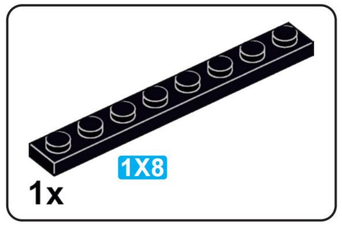

H71

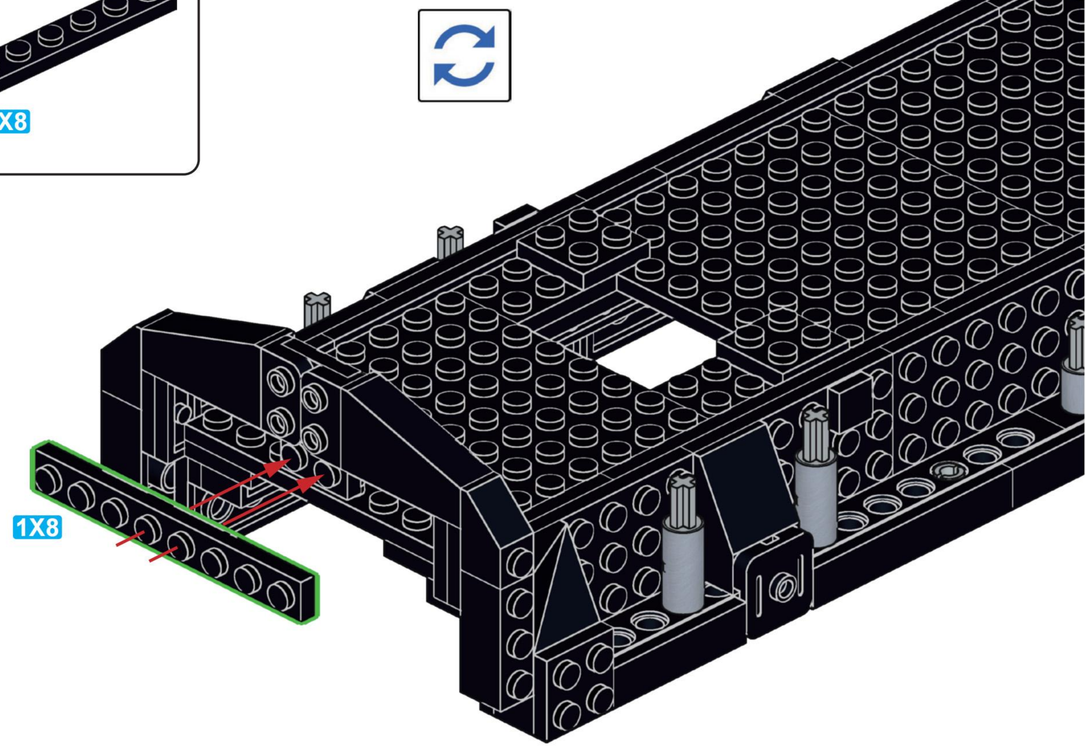

H72

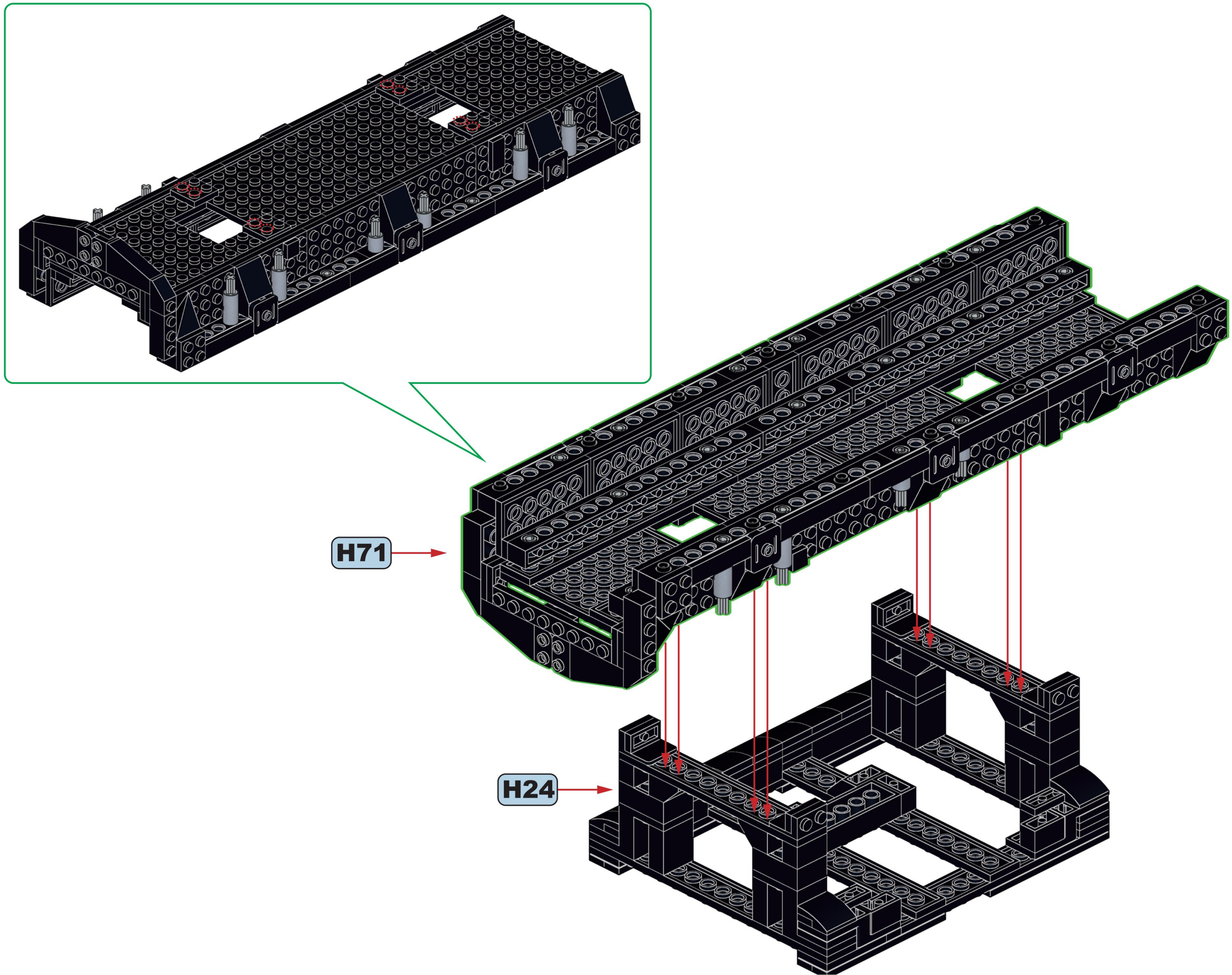

H73

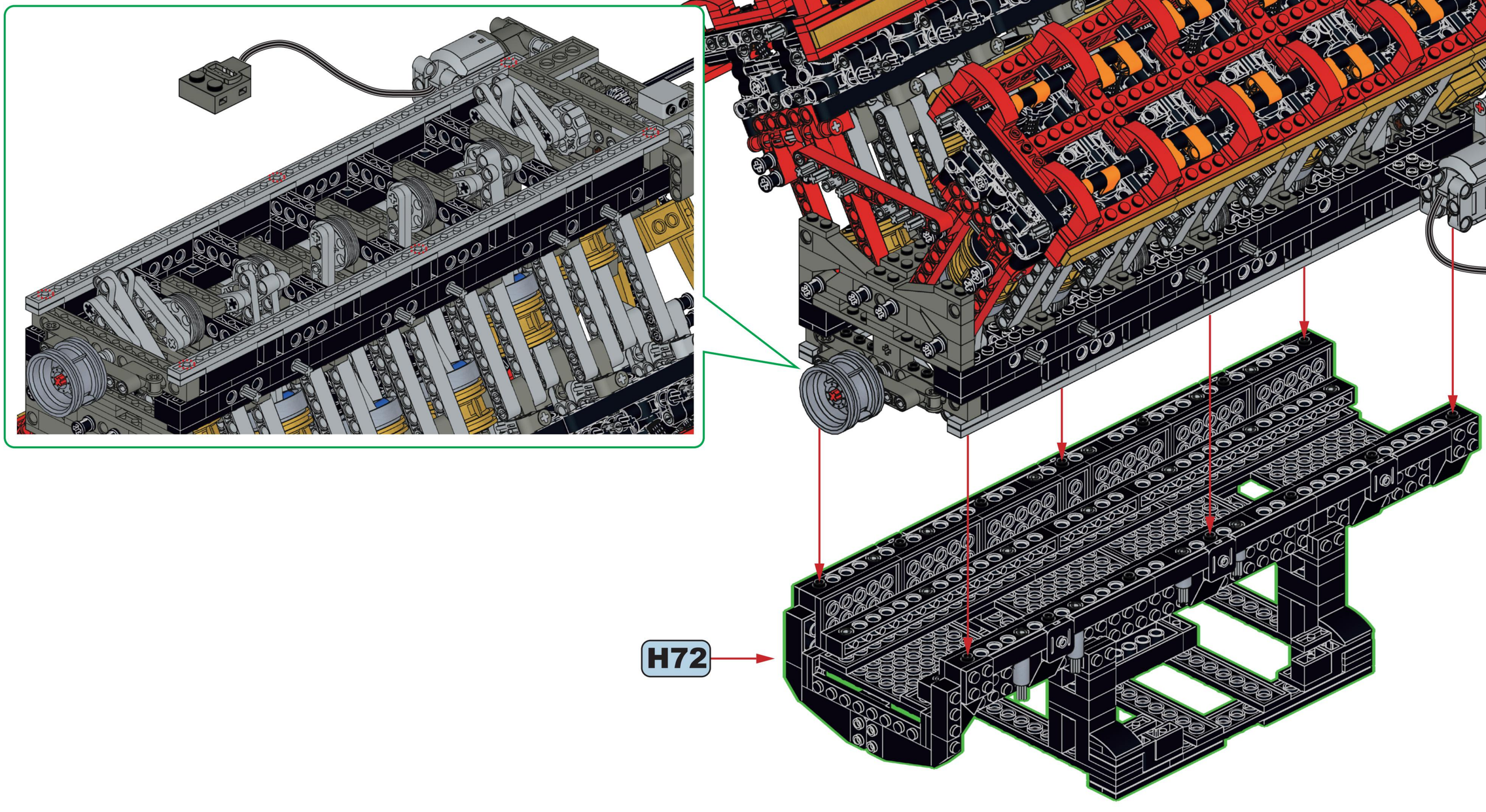

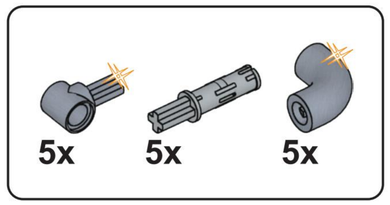

H74

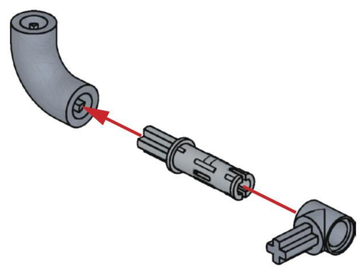

x5

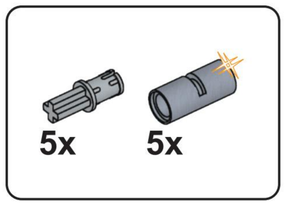

H75

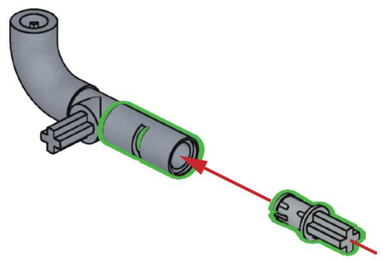

x5

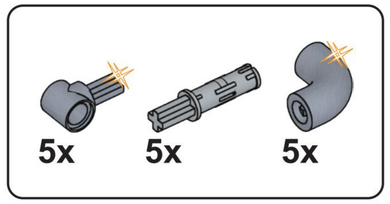

H76

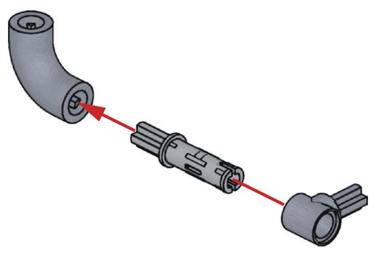

x5

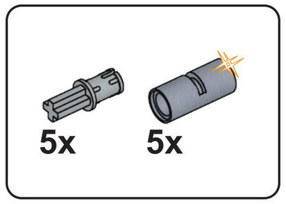

H77

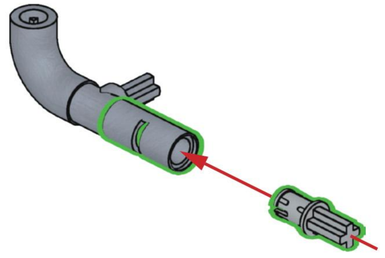

x5

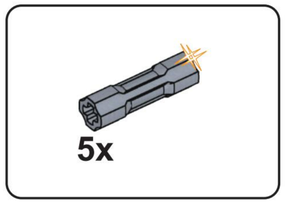

H78

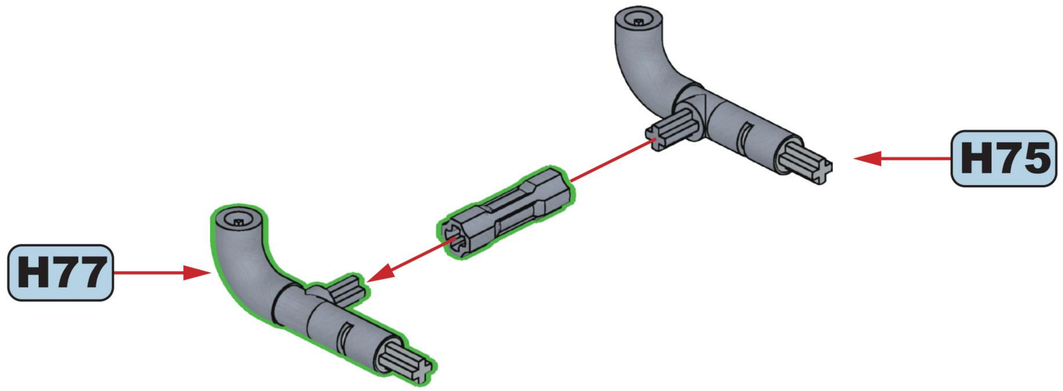

x5

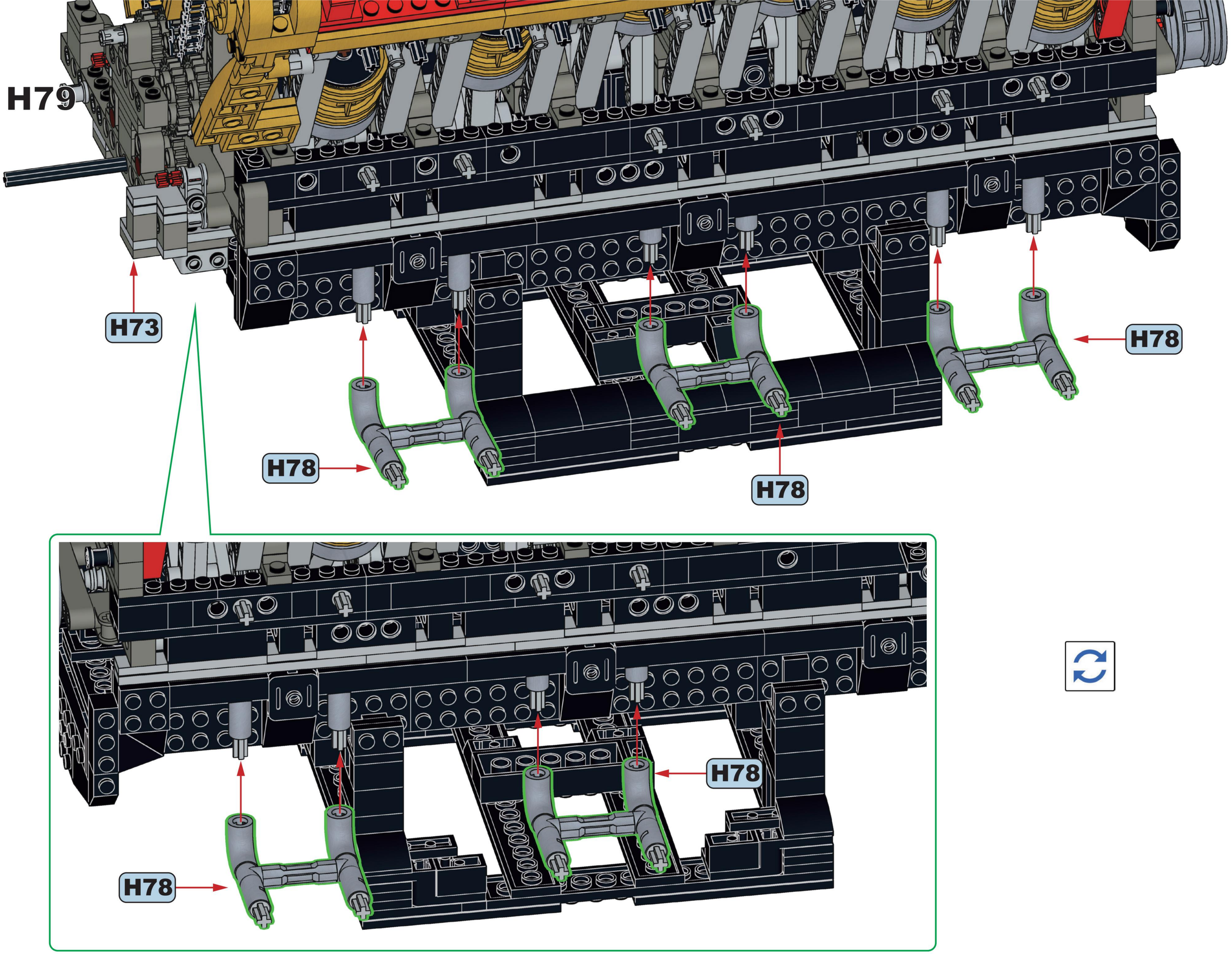
H79
H73
H78
H78
H78
H78

9

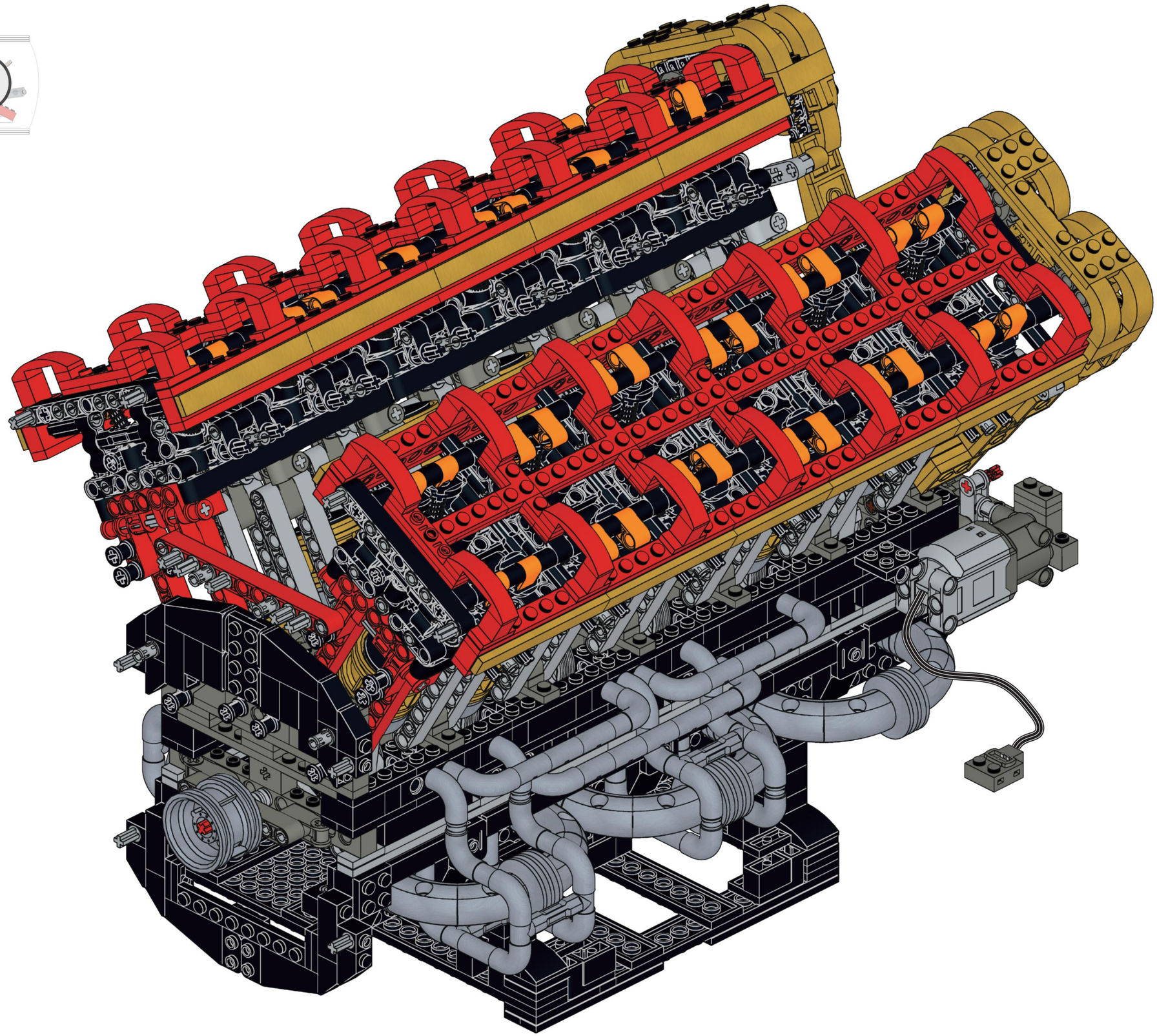

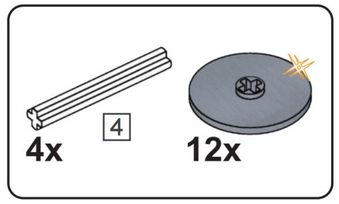

I1

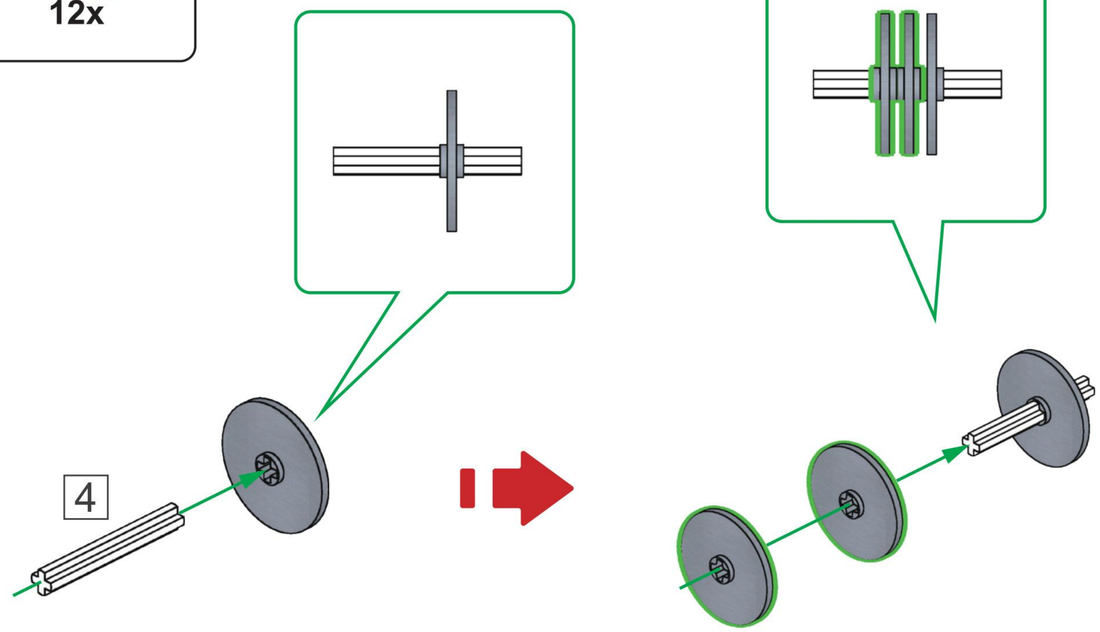

x4

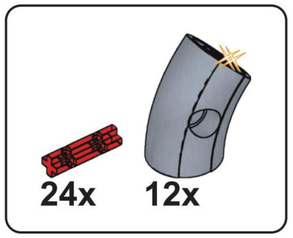

I2

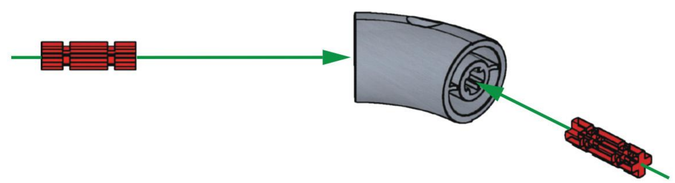

x12

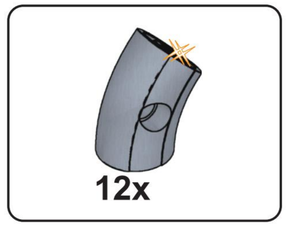

I3

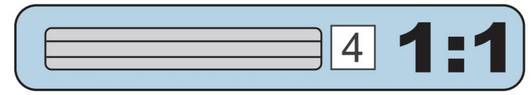

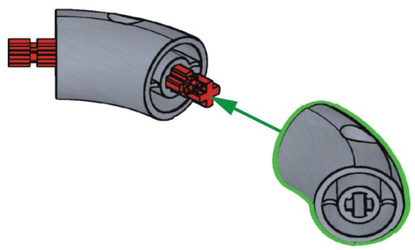

x12

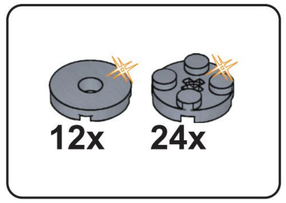

I4

x12

I5

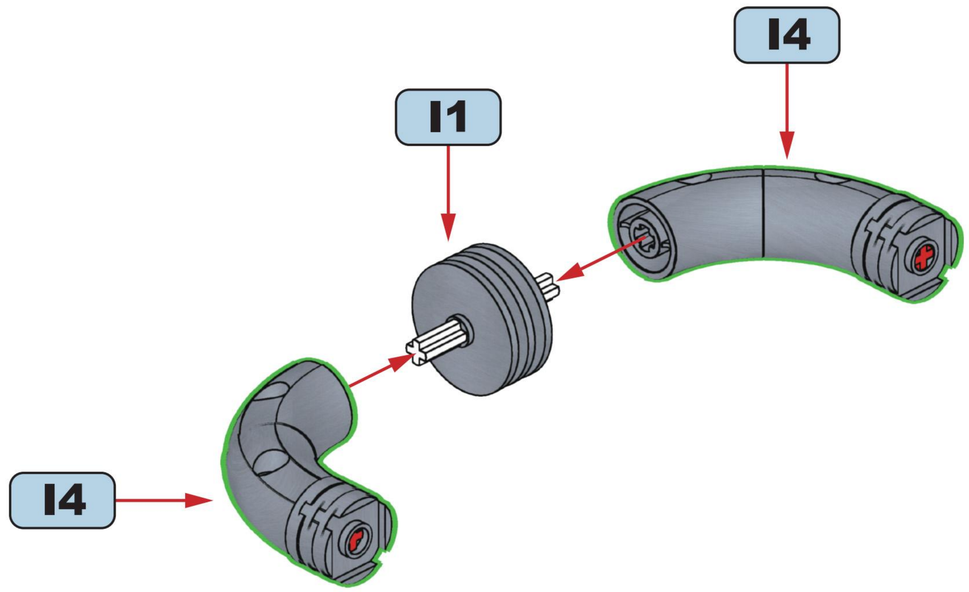

5 **1:1**

x4

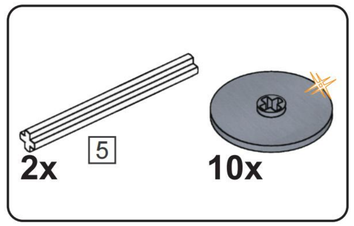

I6

x2

I7

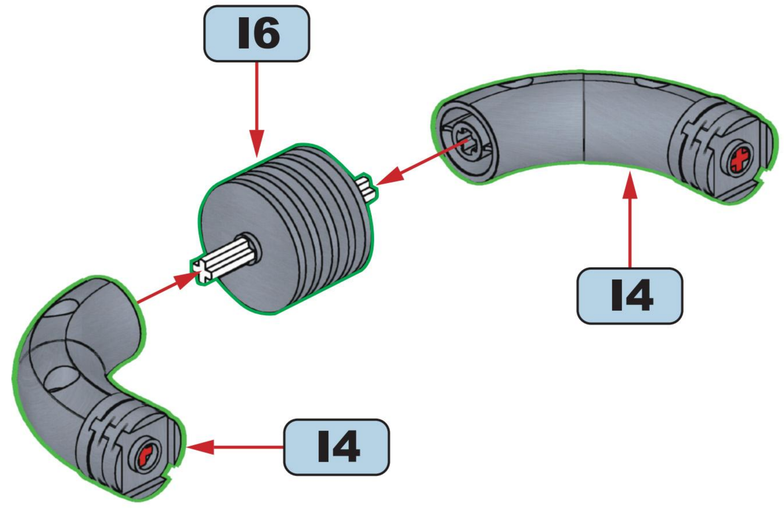

x2

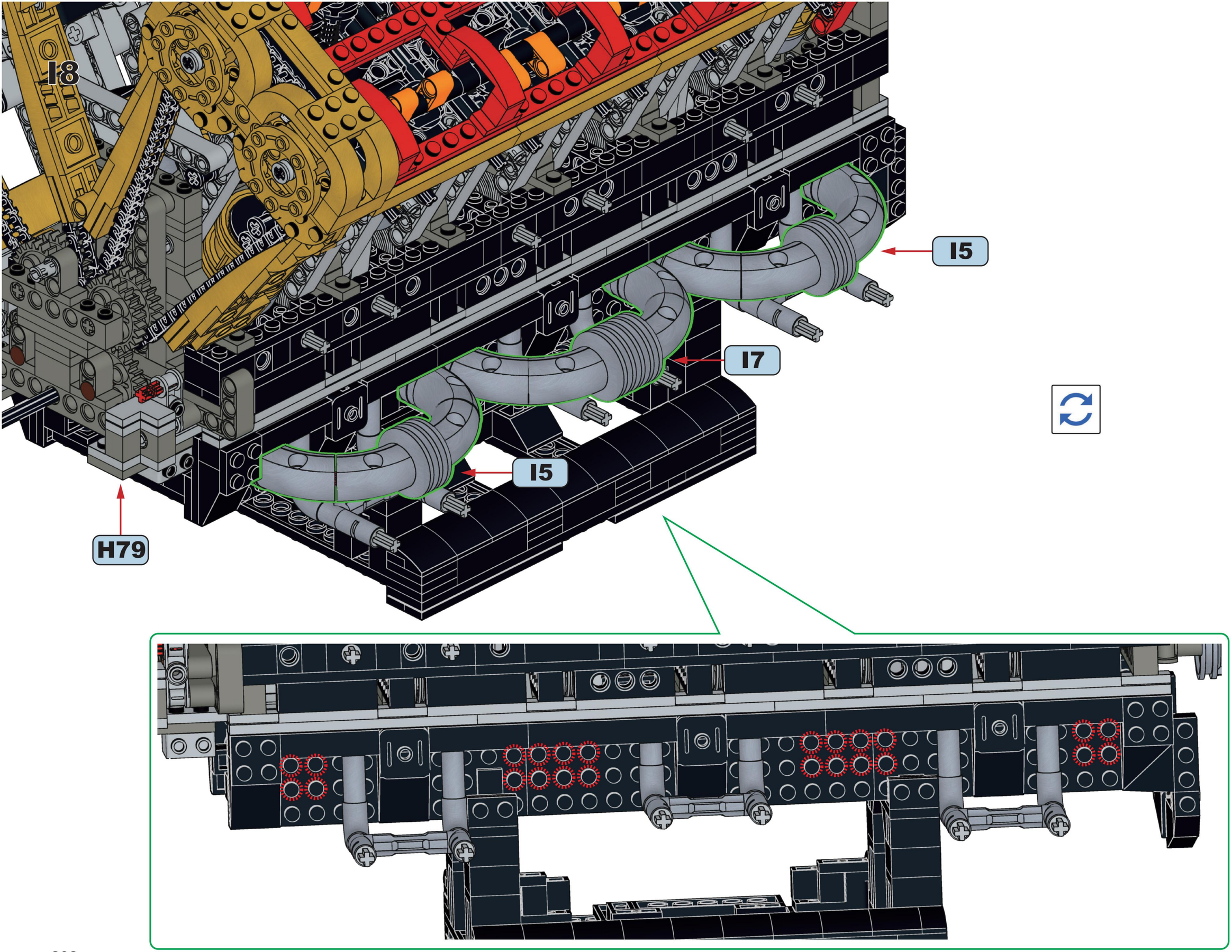
I8
I5
I7
I5
H79

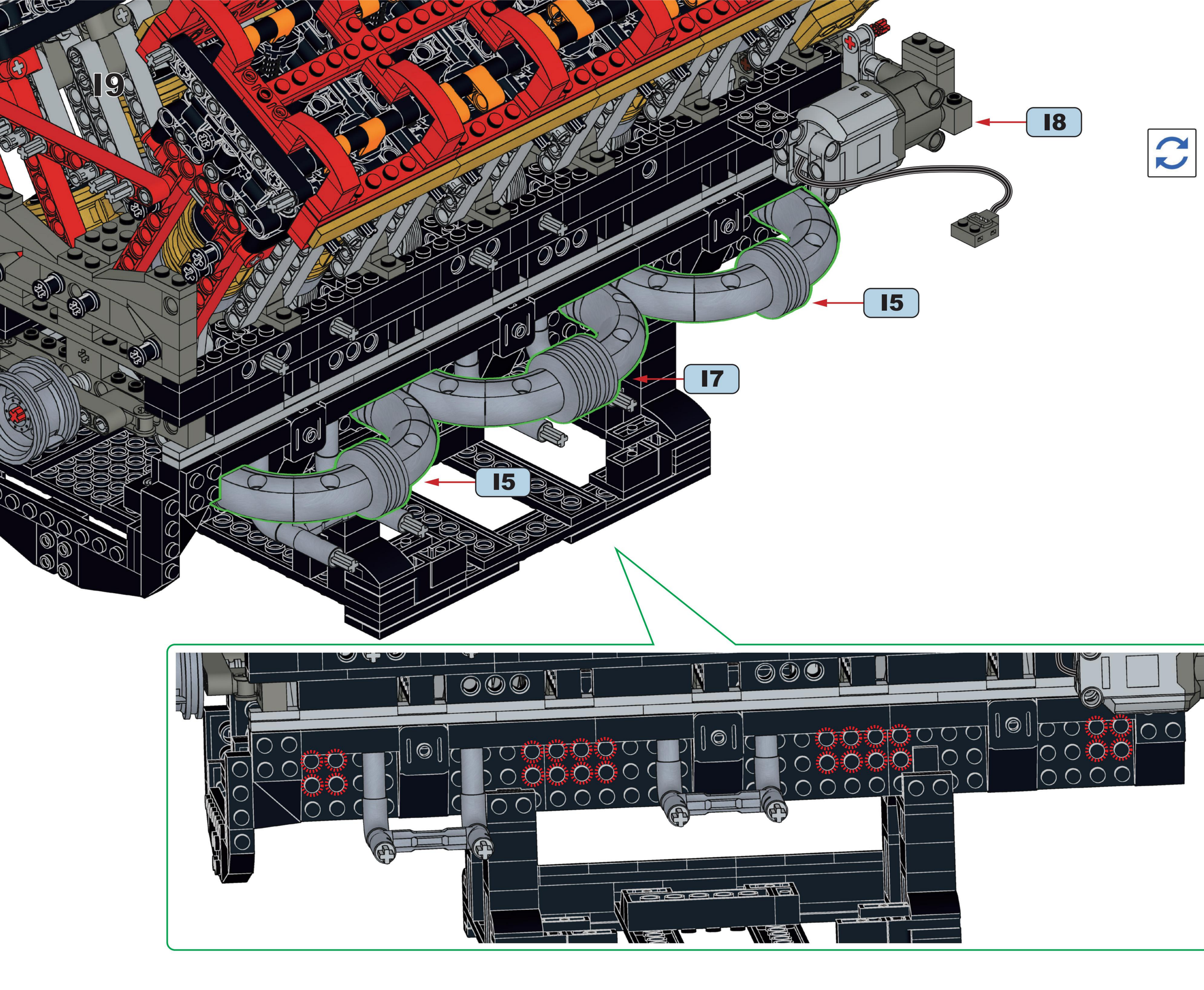
I9
I8
I5
I7
I5

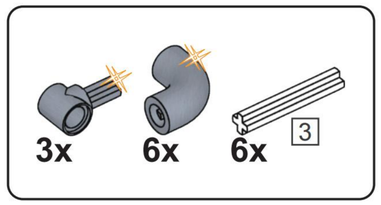

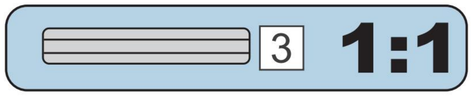

I10

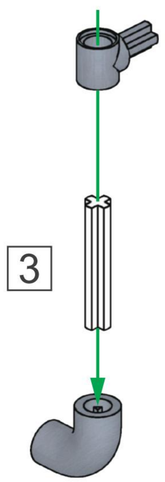

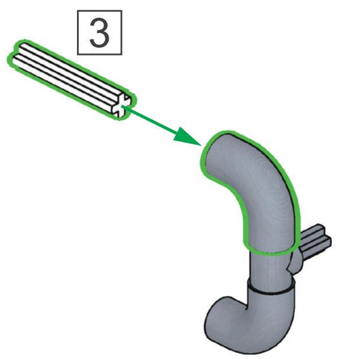

x3

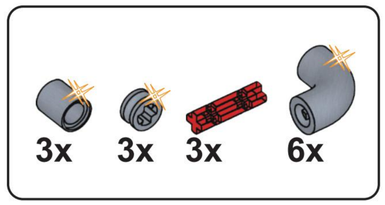

I11

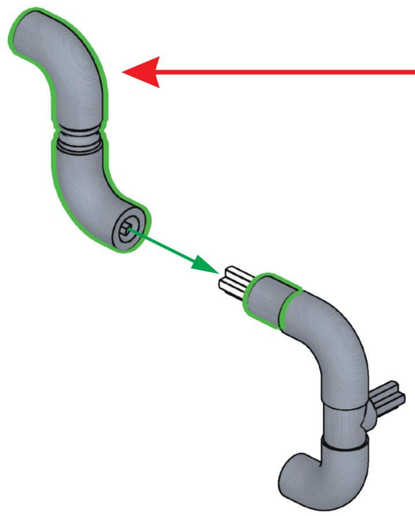

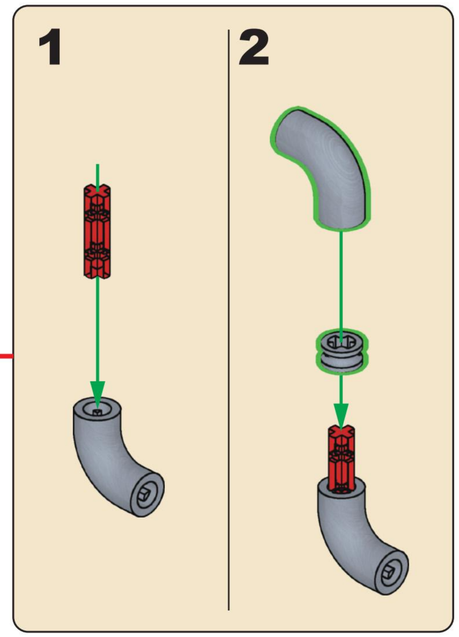

x3

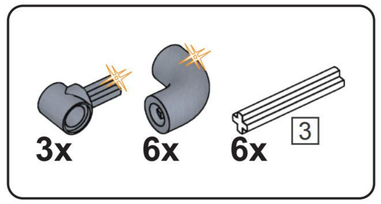

I12

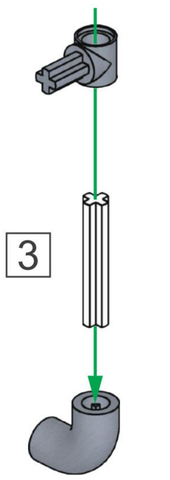

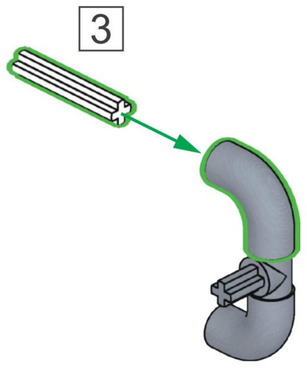

x3

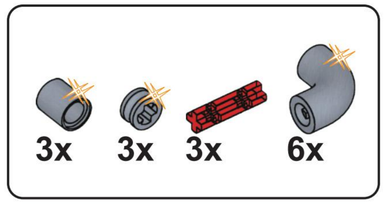

I13

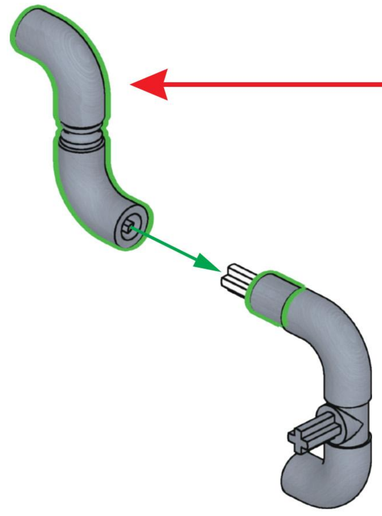

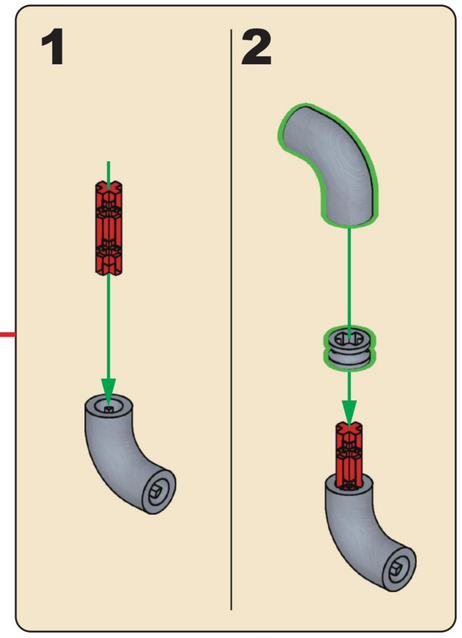

x3

3x

I14

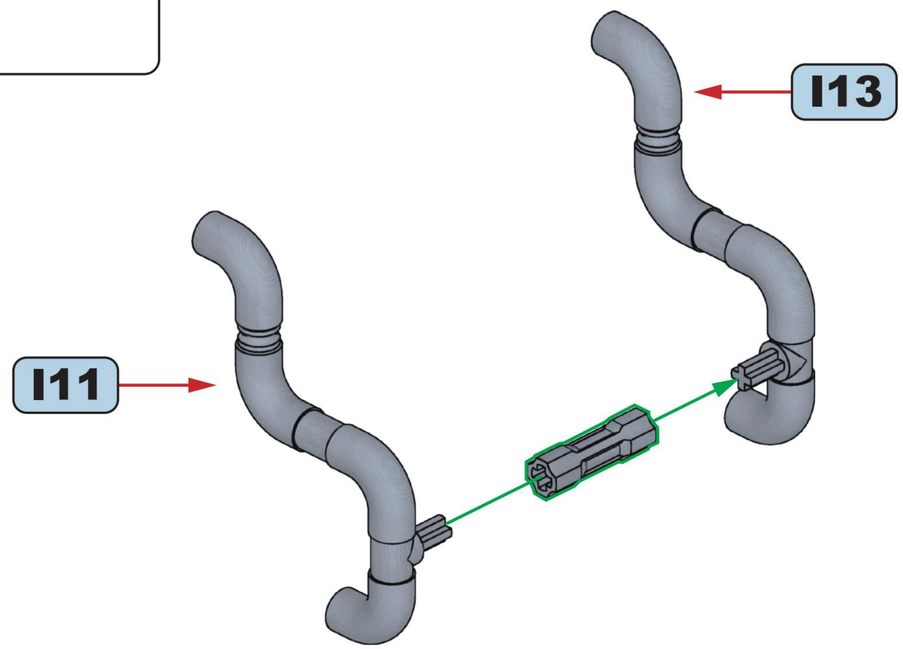

x3

4x 8x 4x 3

I15

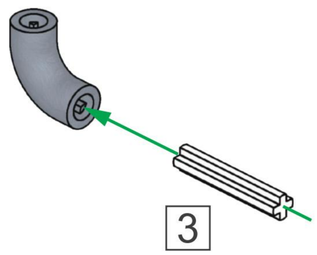

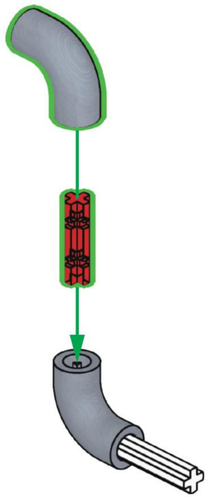

3 1:1

x4

2x 2x 2x 4x

I16

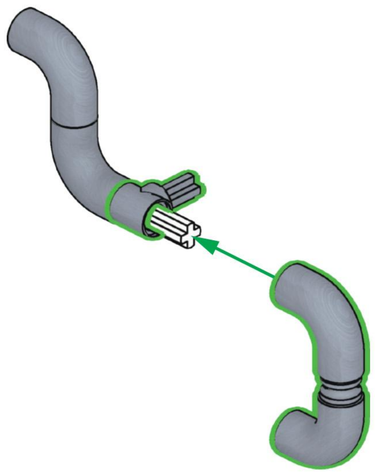

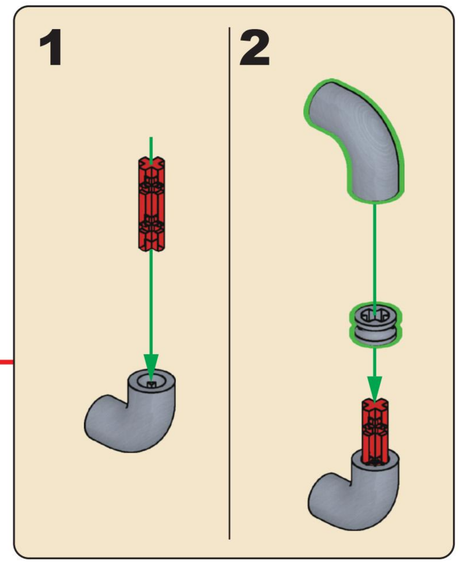

x2

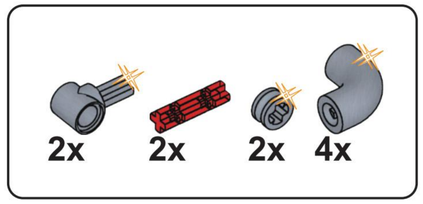

I17

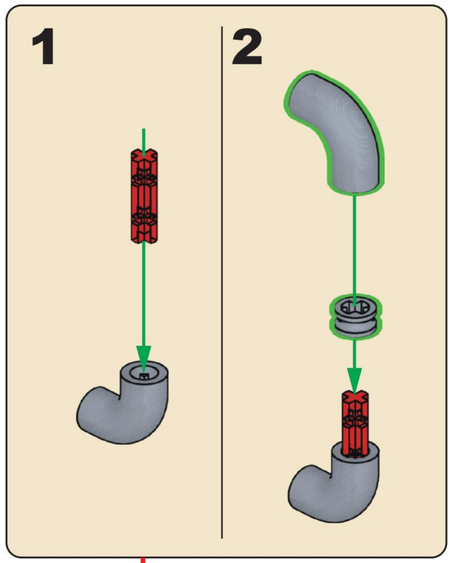

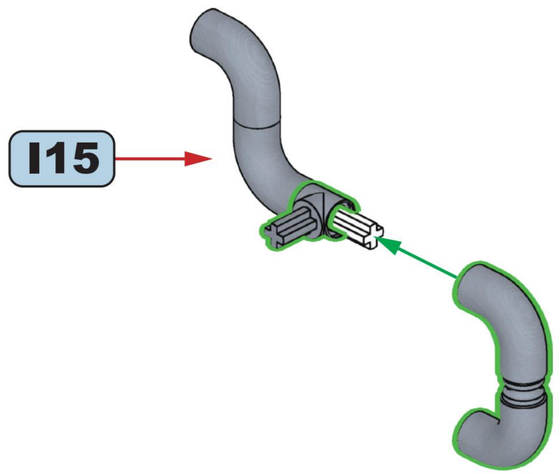

x2

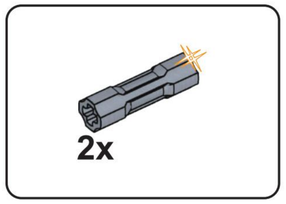

I18

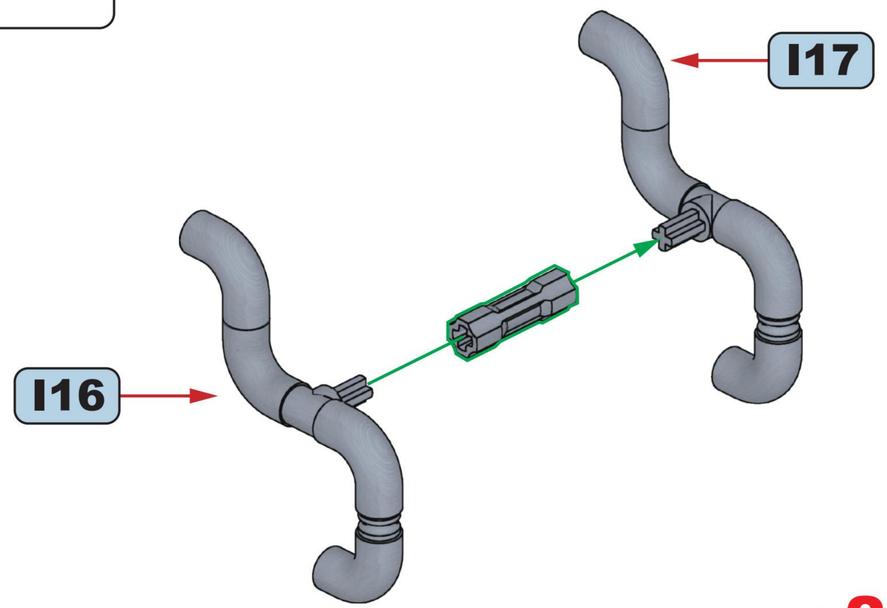

x2

I19

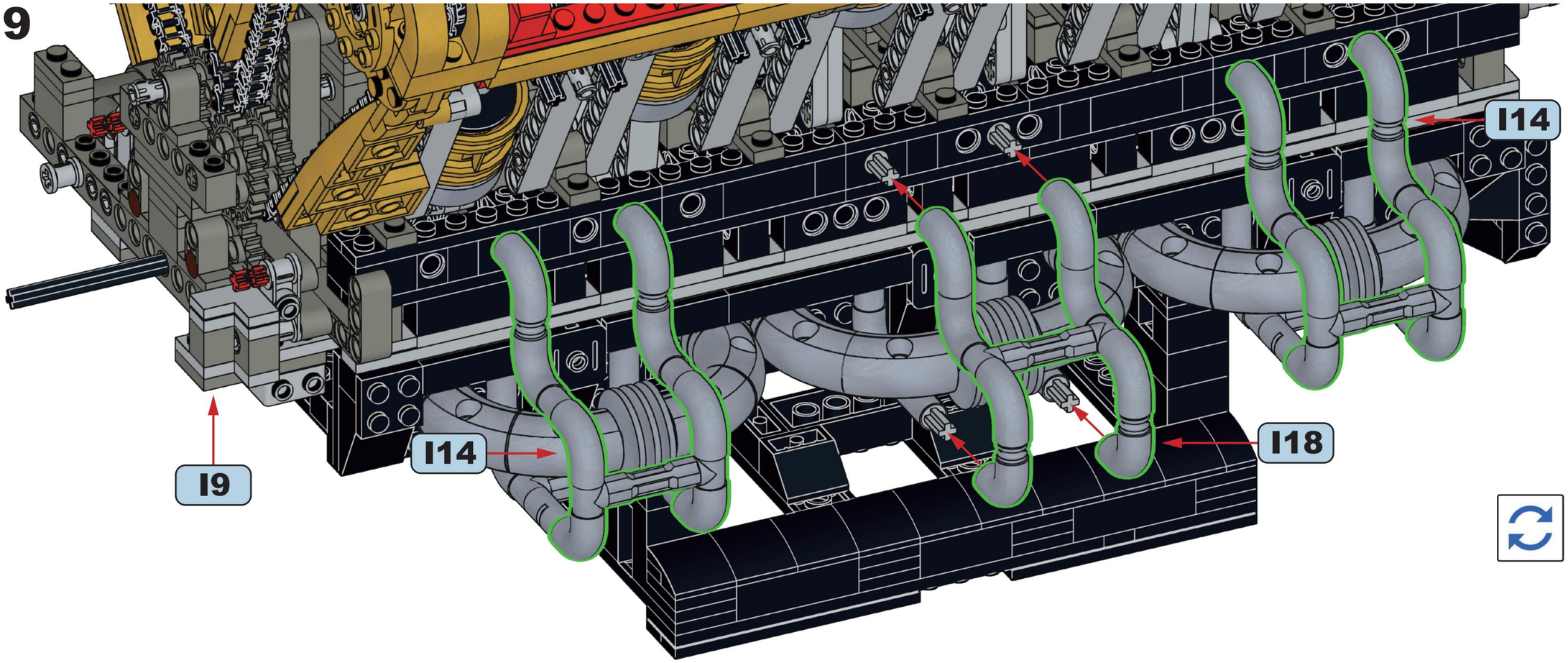

I20

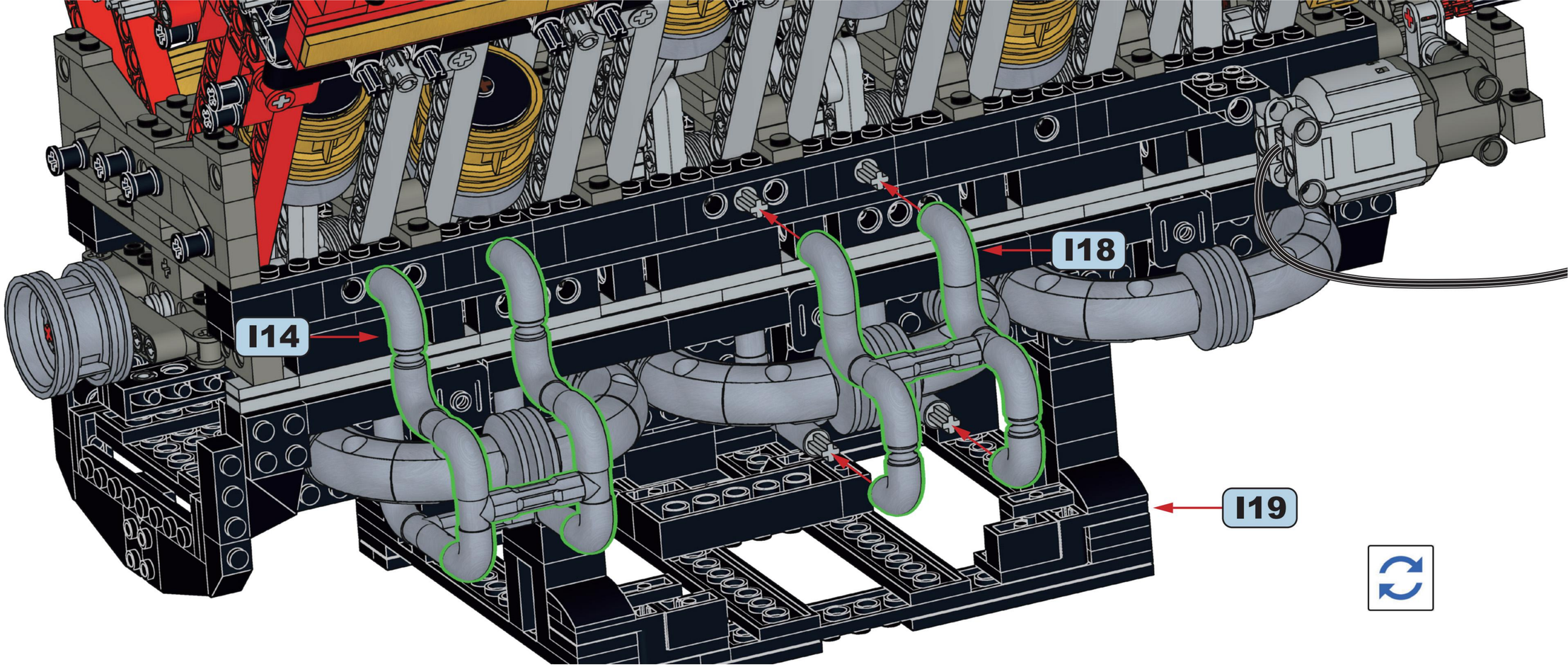

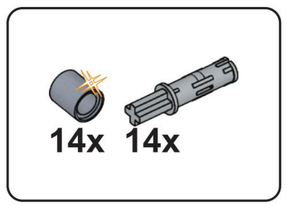

I21

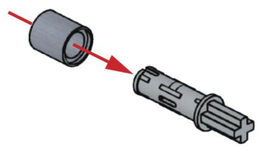

x14

I22

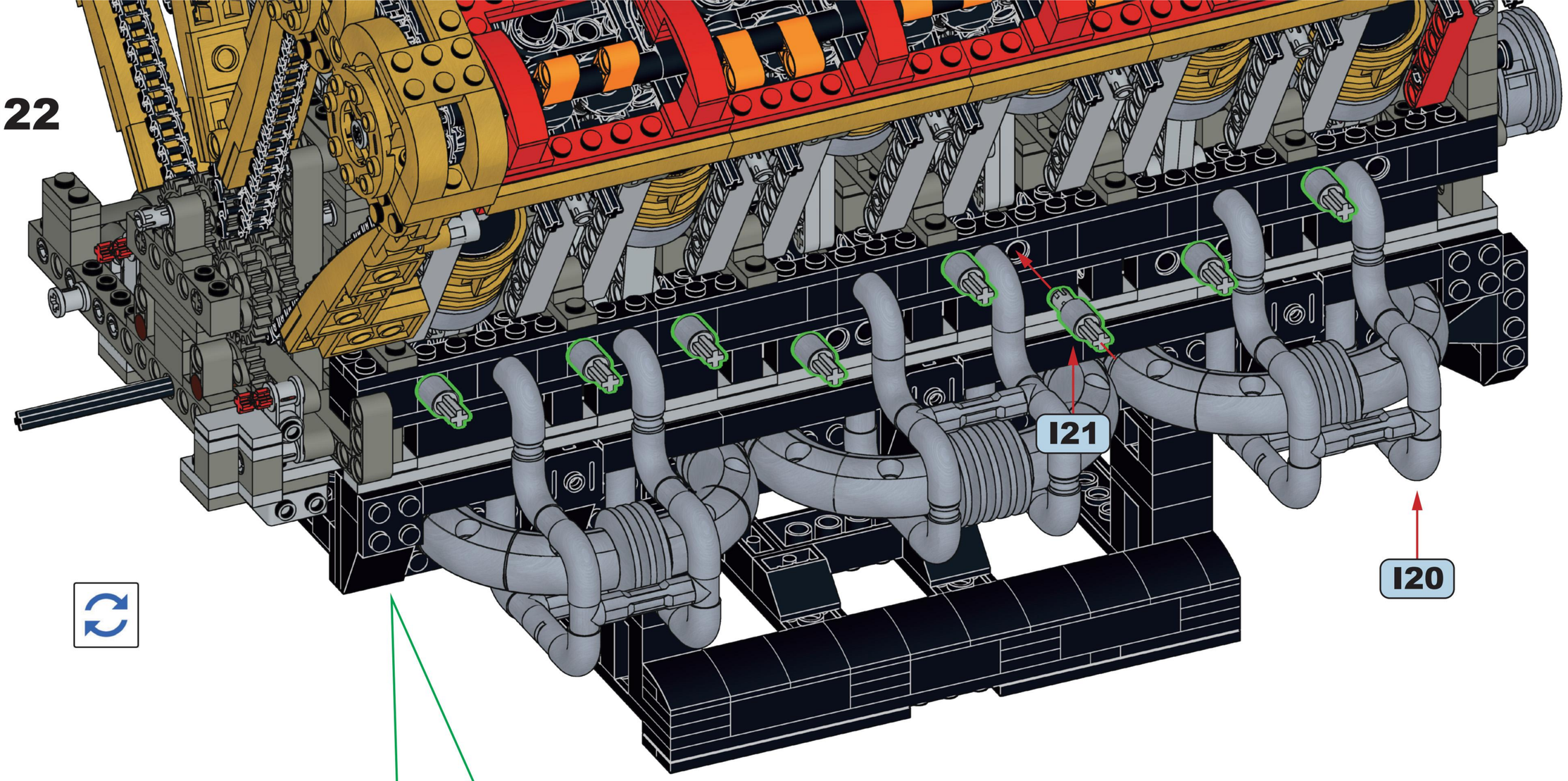

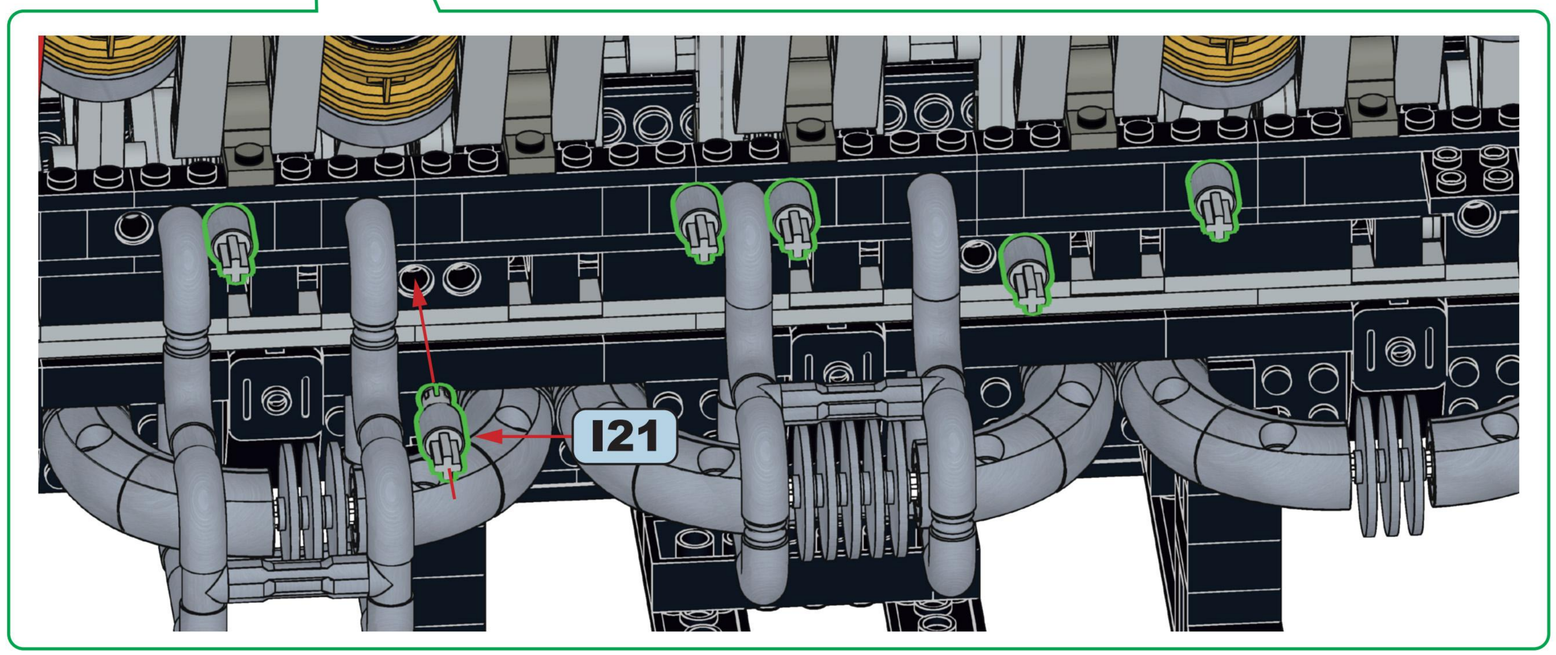

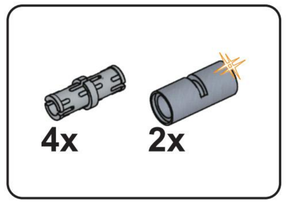

123

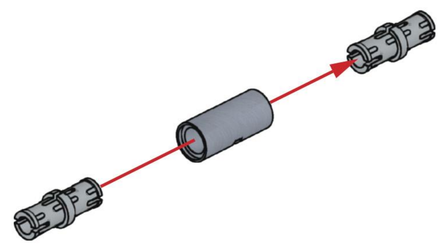

x2

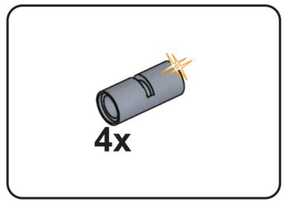

124

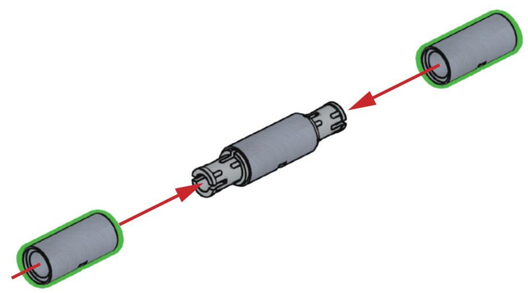

x2

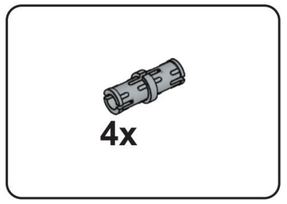

125

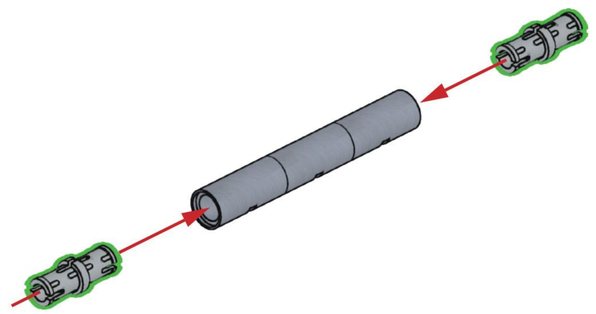

x2

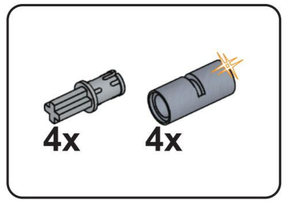

126

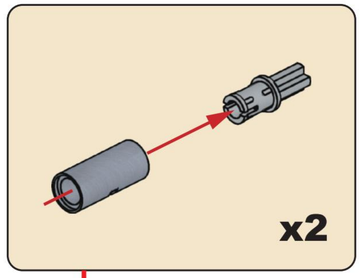

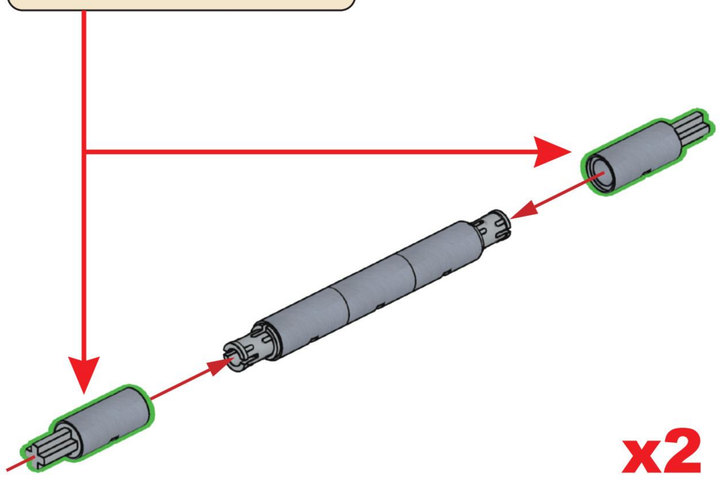

x2

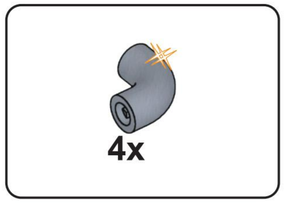

127

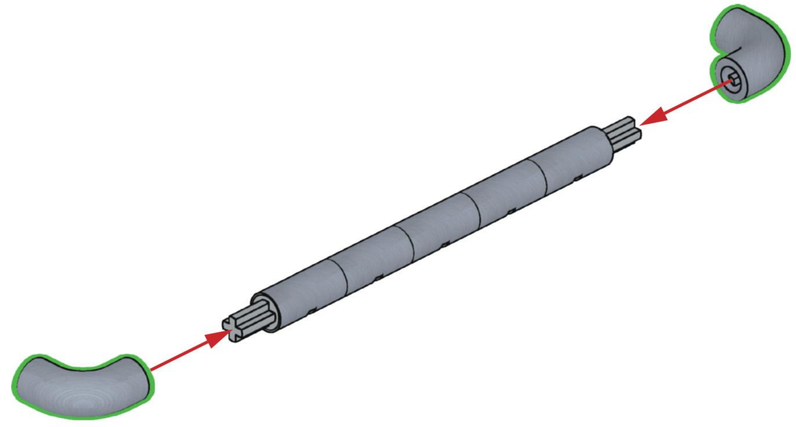

x2

128

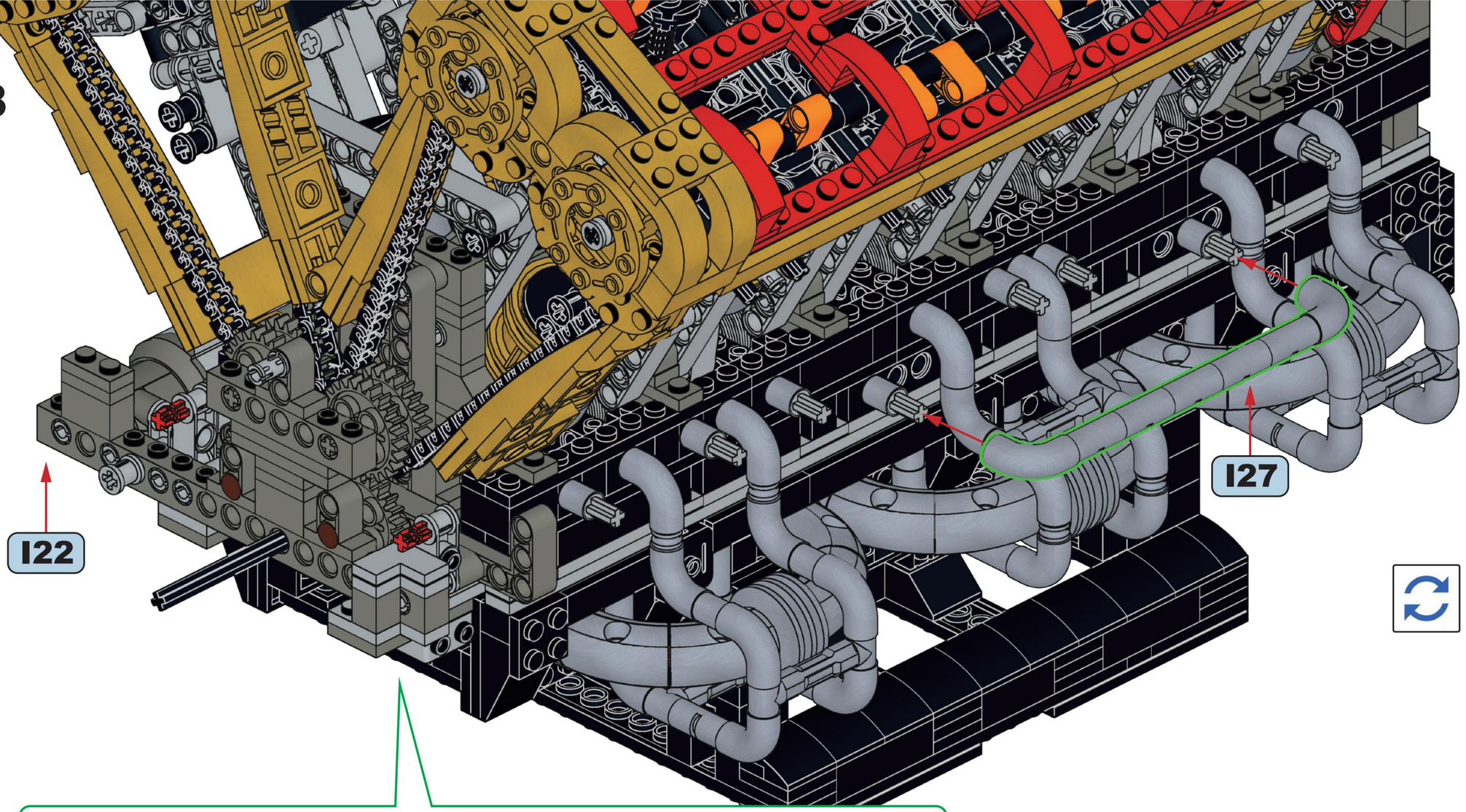

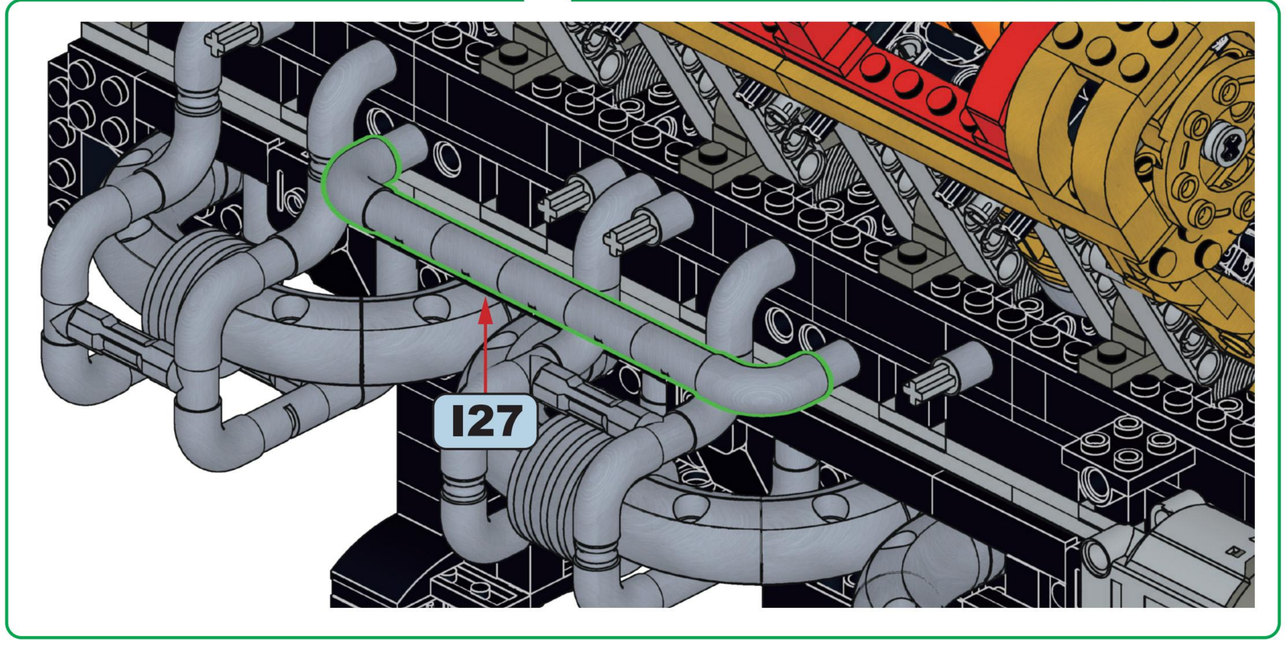

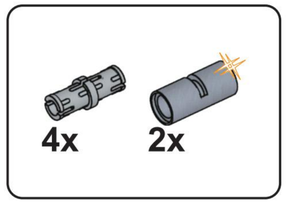

I29

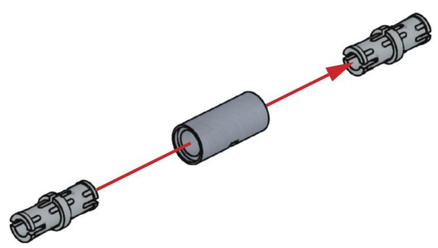

x2

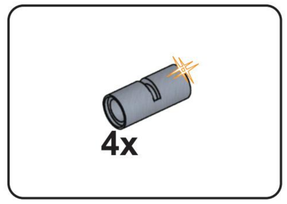

I30

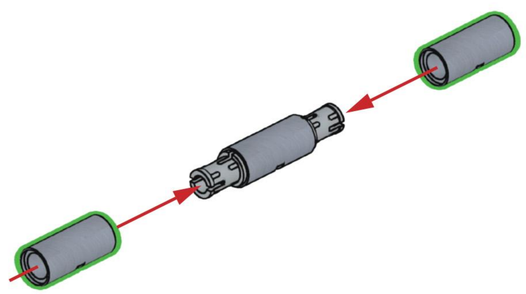

x2

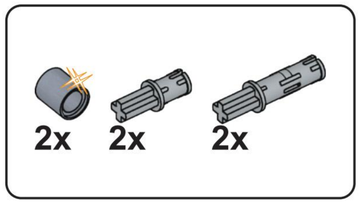

I31

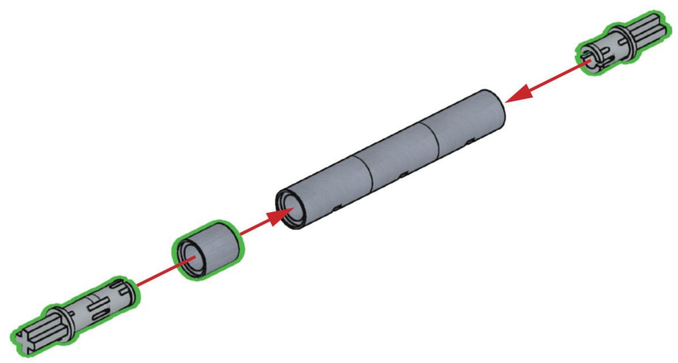

x2

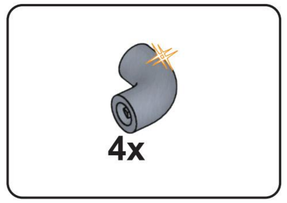

I32

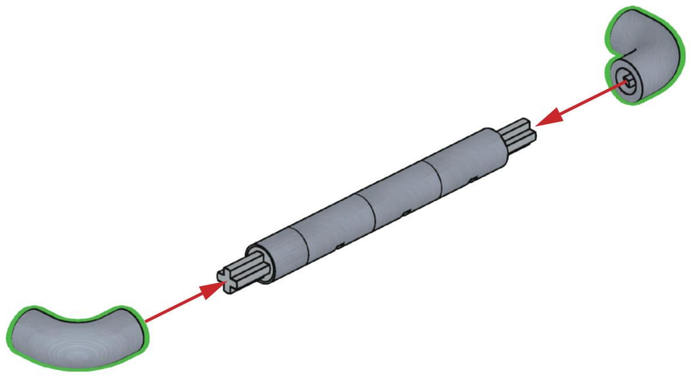

x2

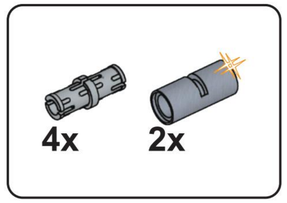

I33

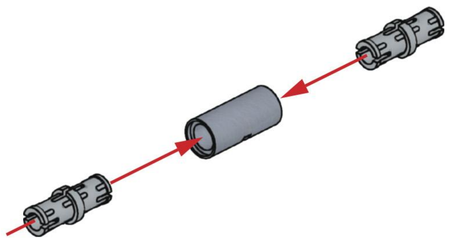

x2

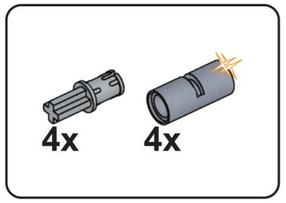

I34

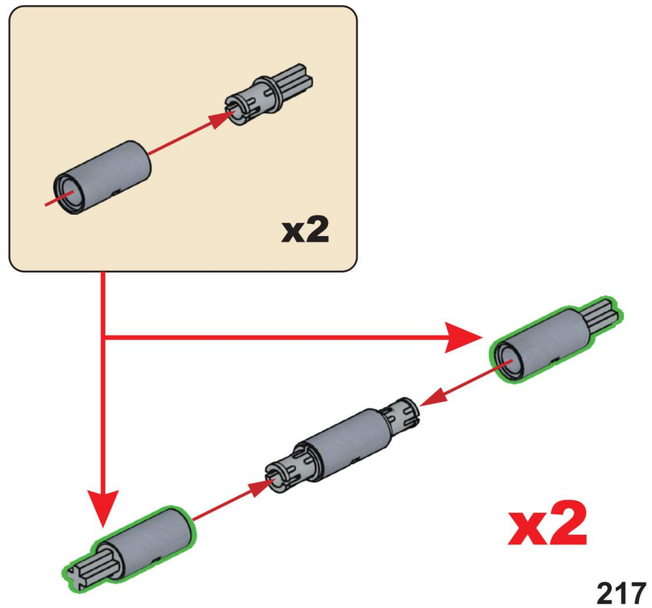

x2

4x

I35

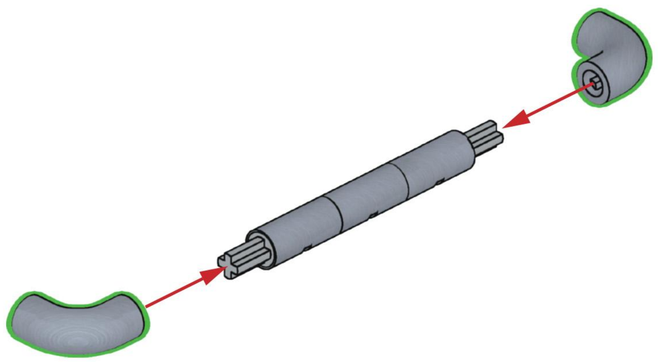

x2

2x 1x 2x

I36

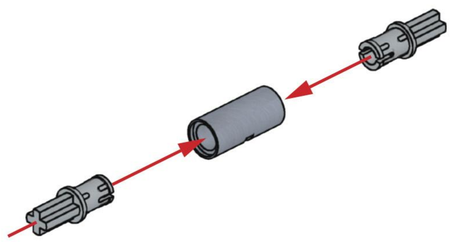

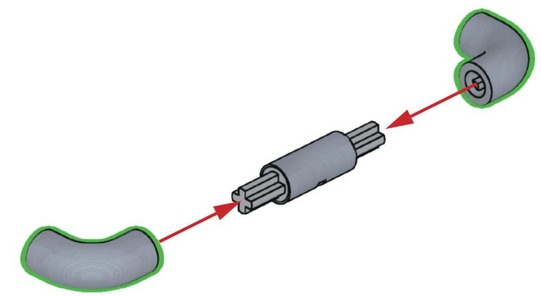

I37

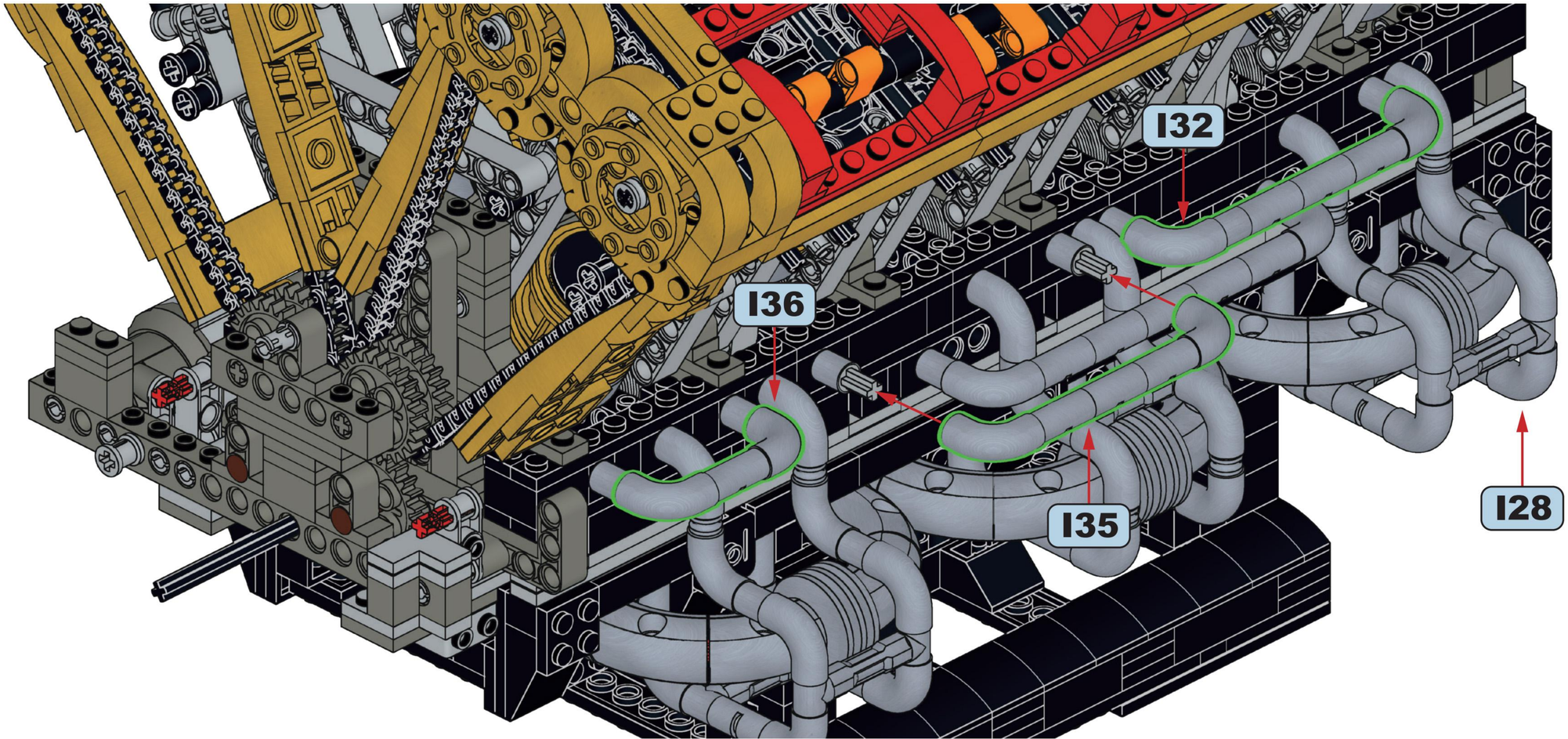

I38

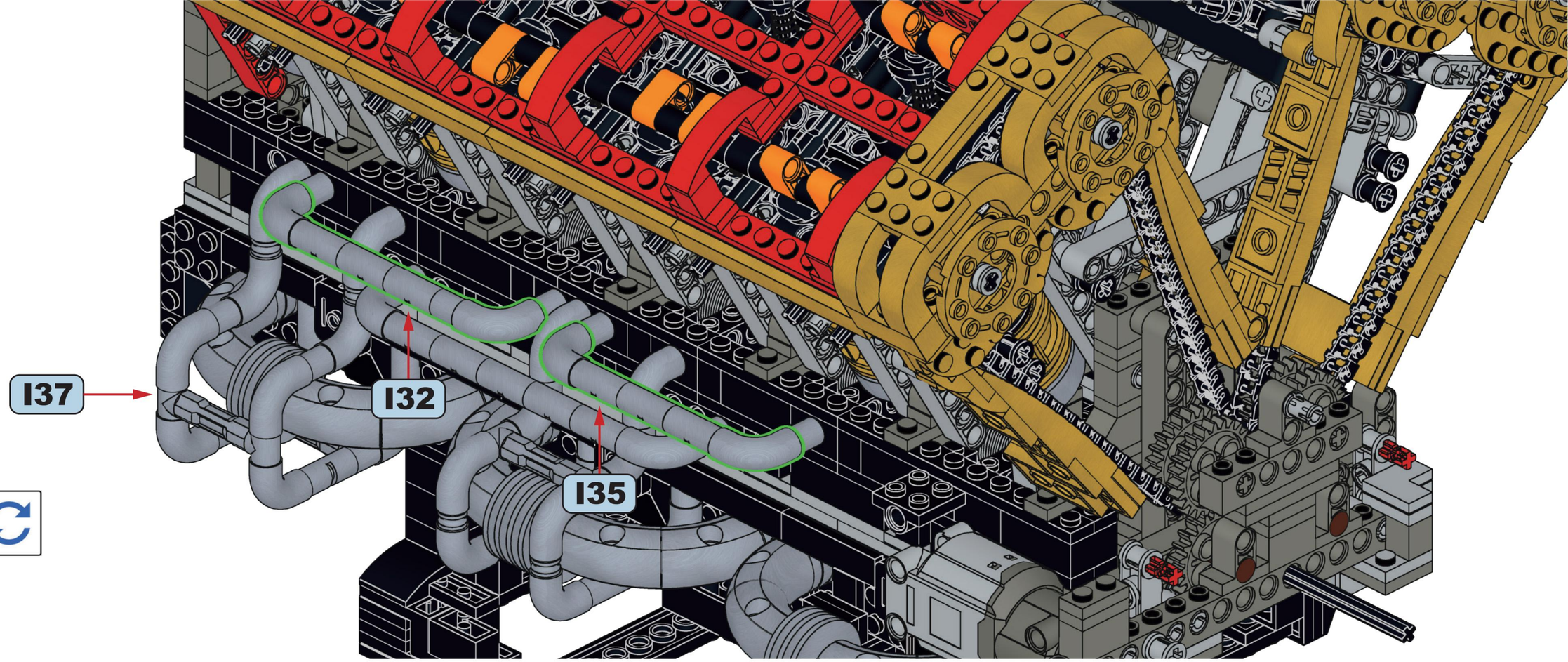

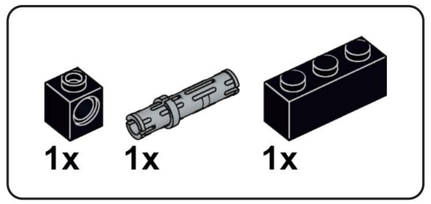

I39

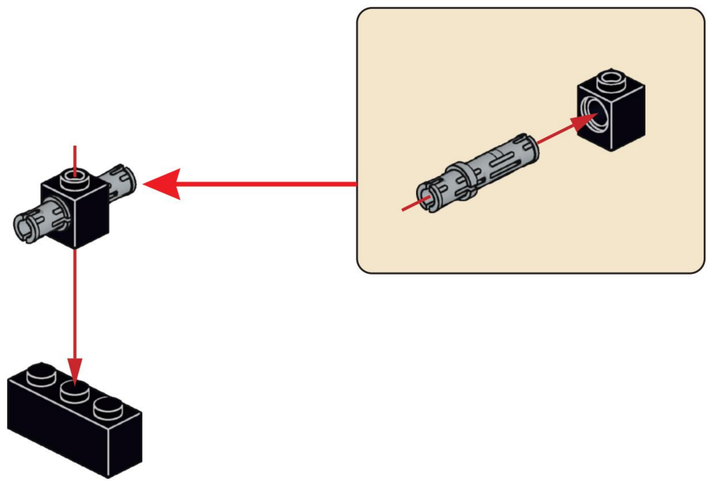

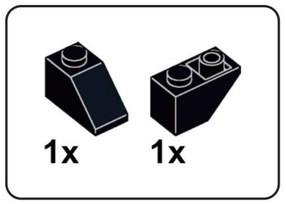

I40

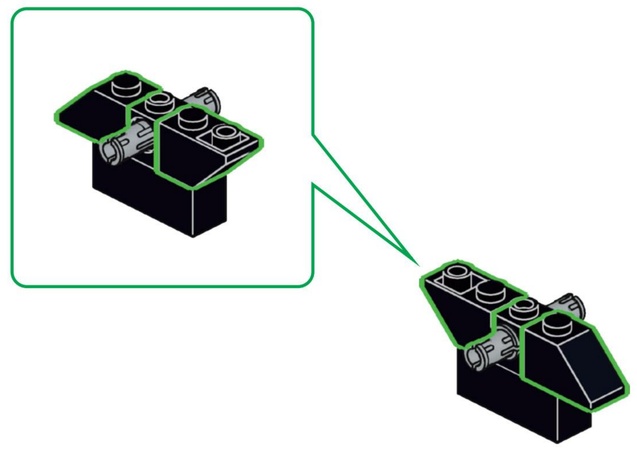

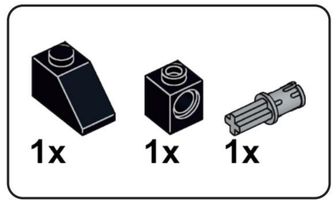

141

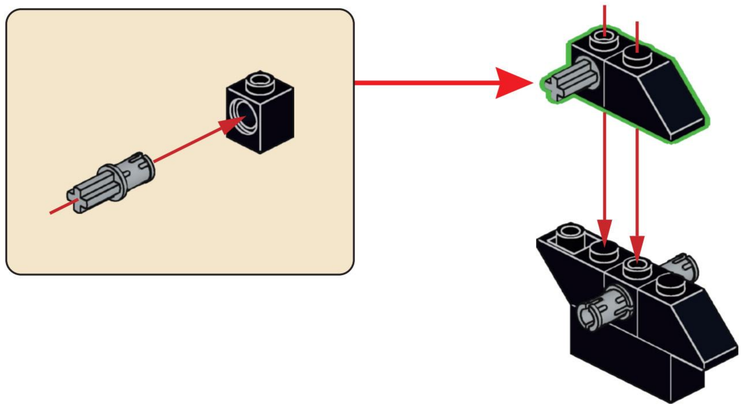

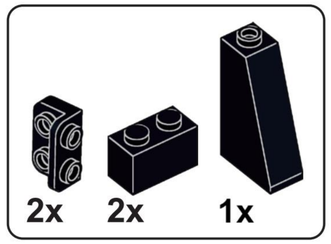

142

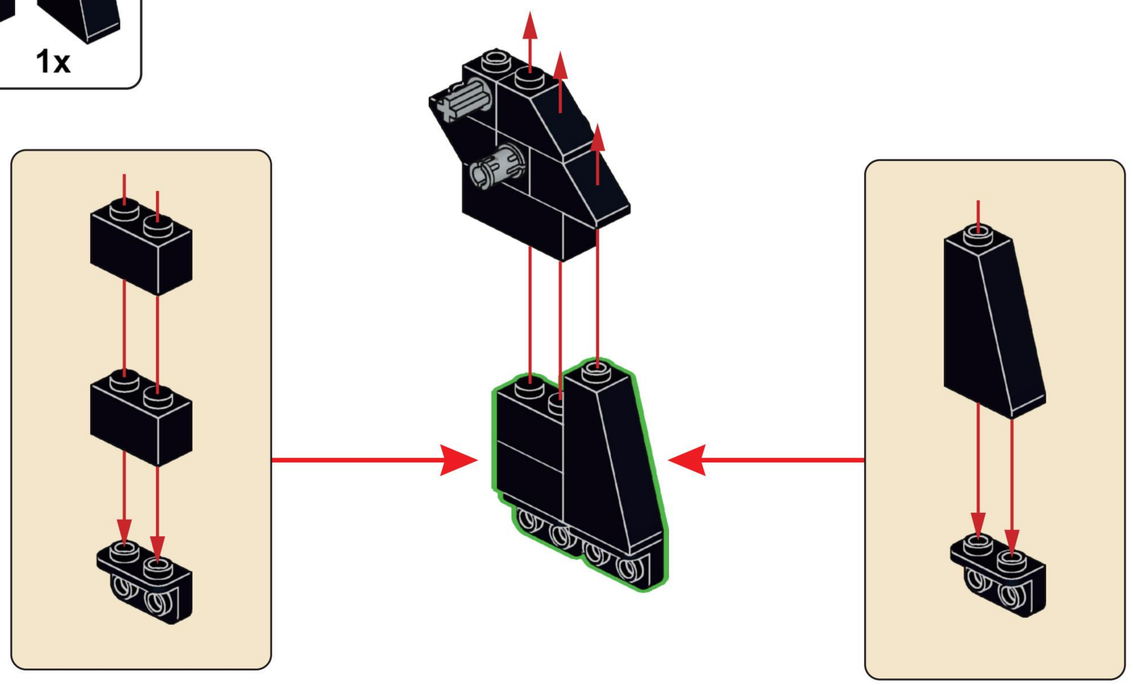

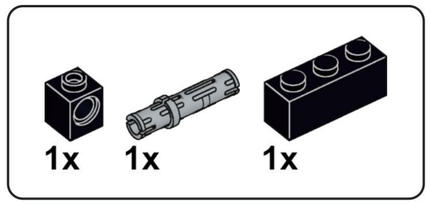

143

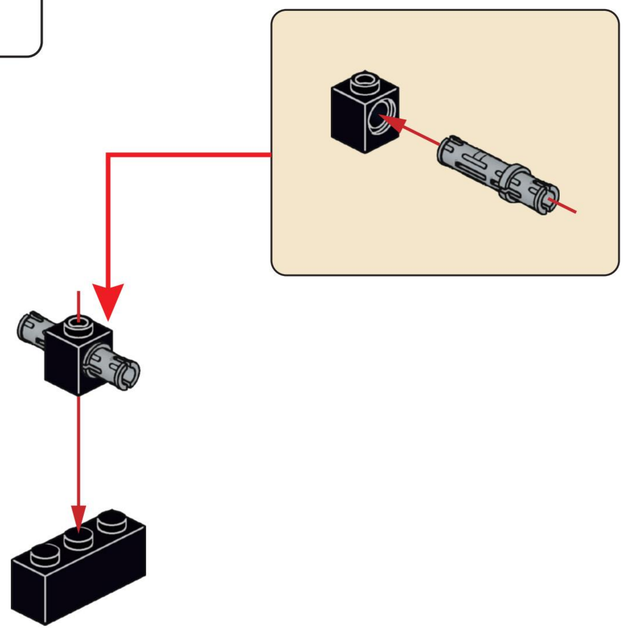

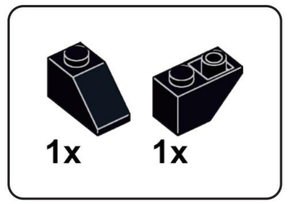

144

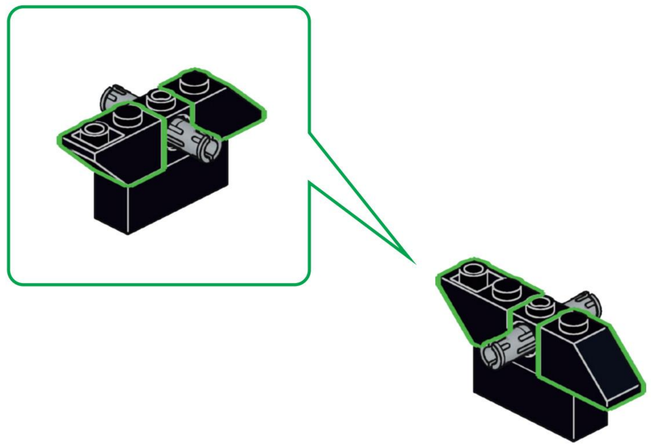

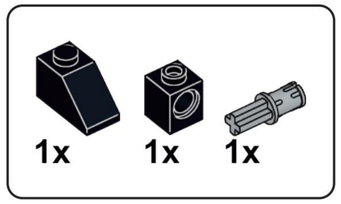

145

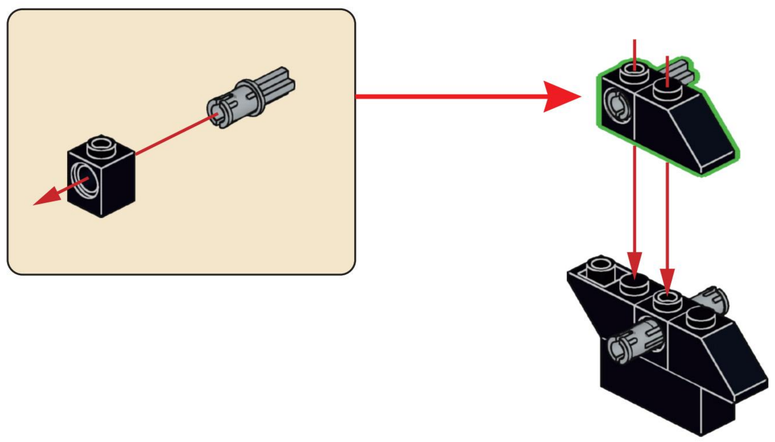

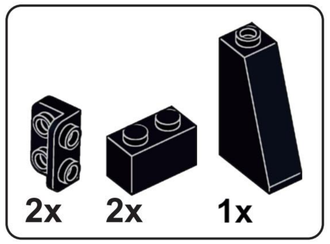

146

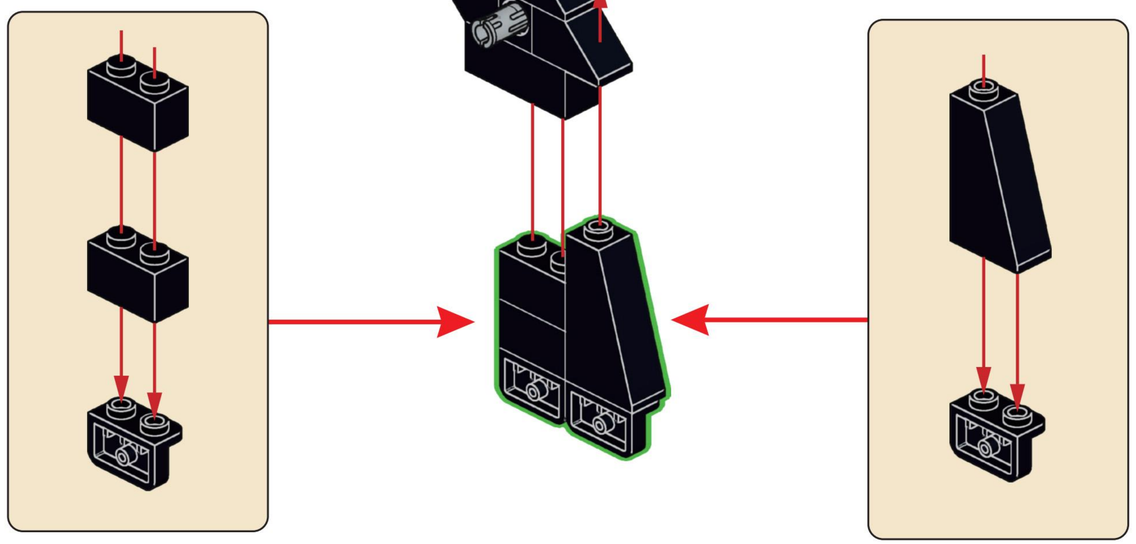

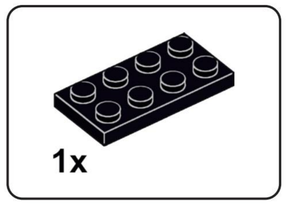

147

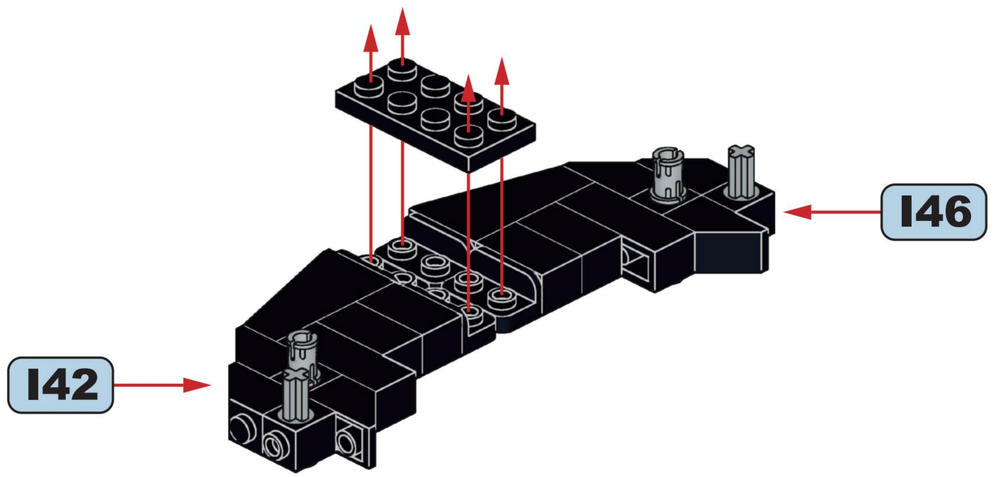

148

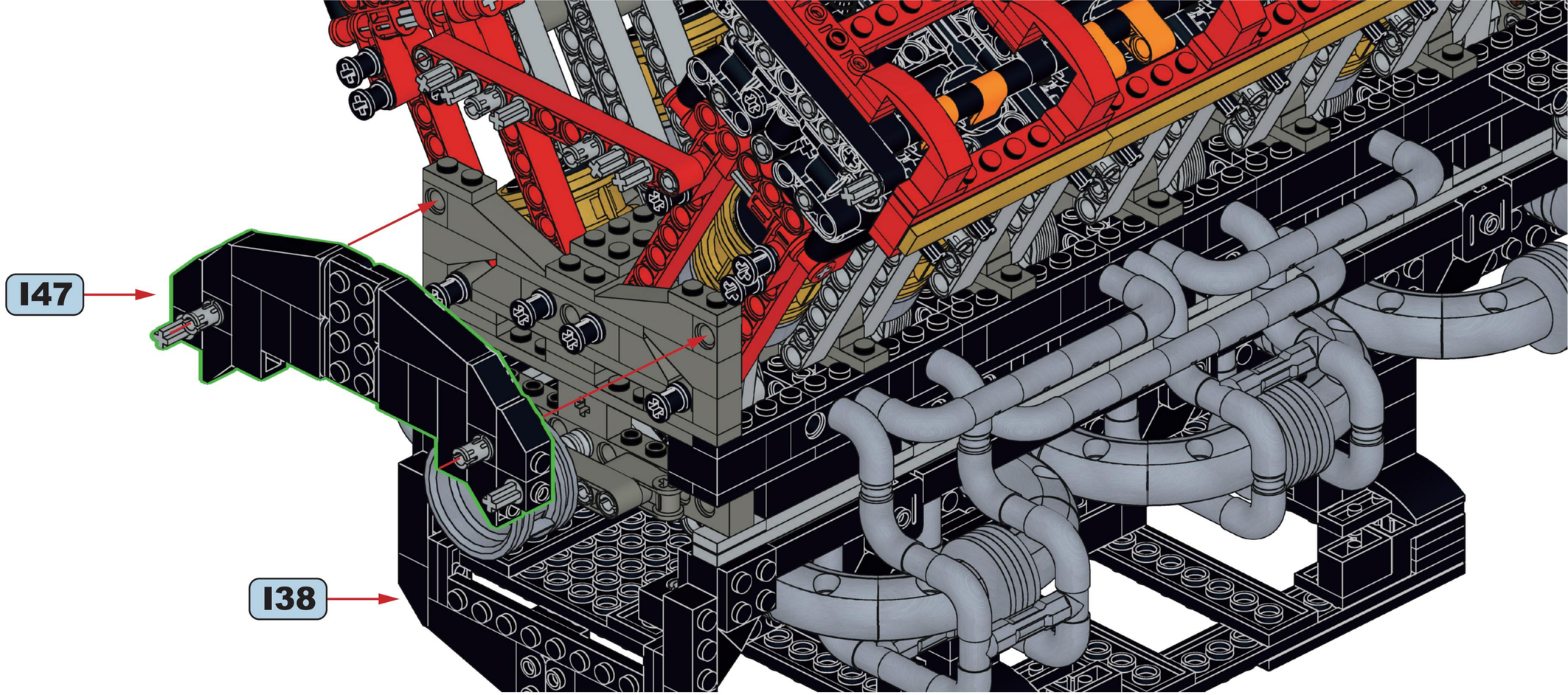

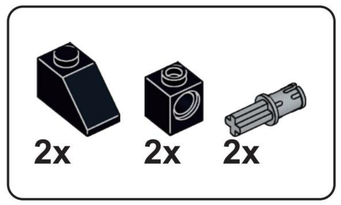

145

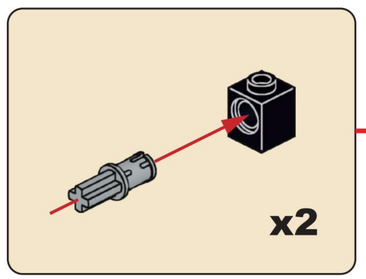

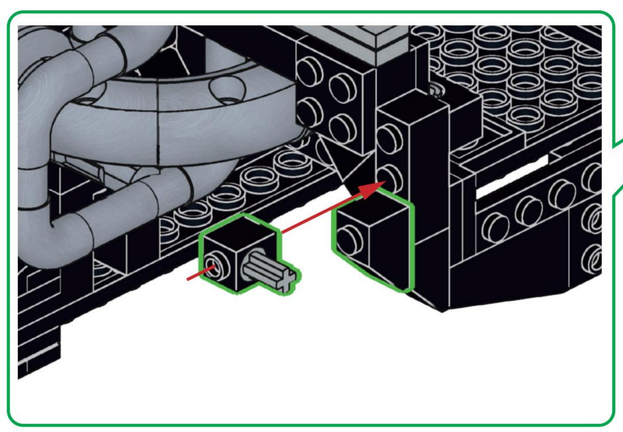

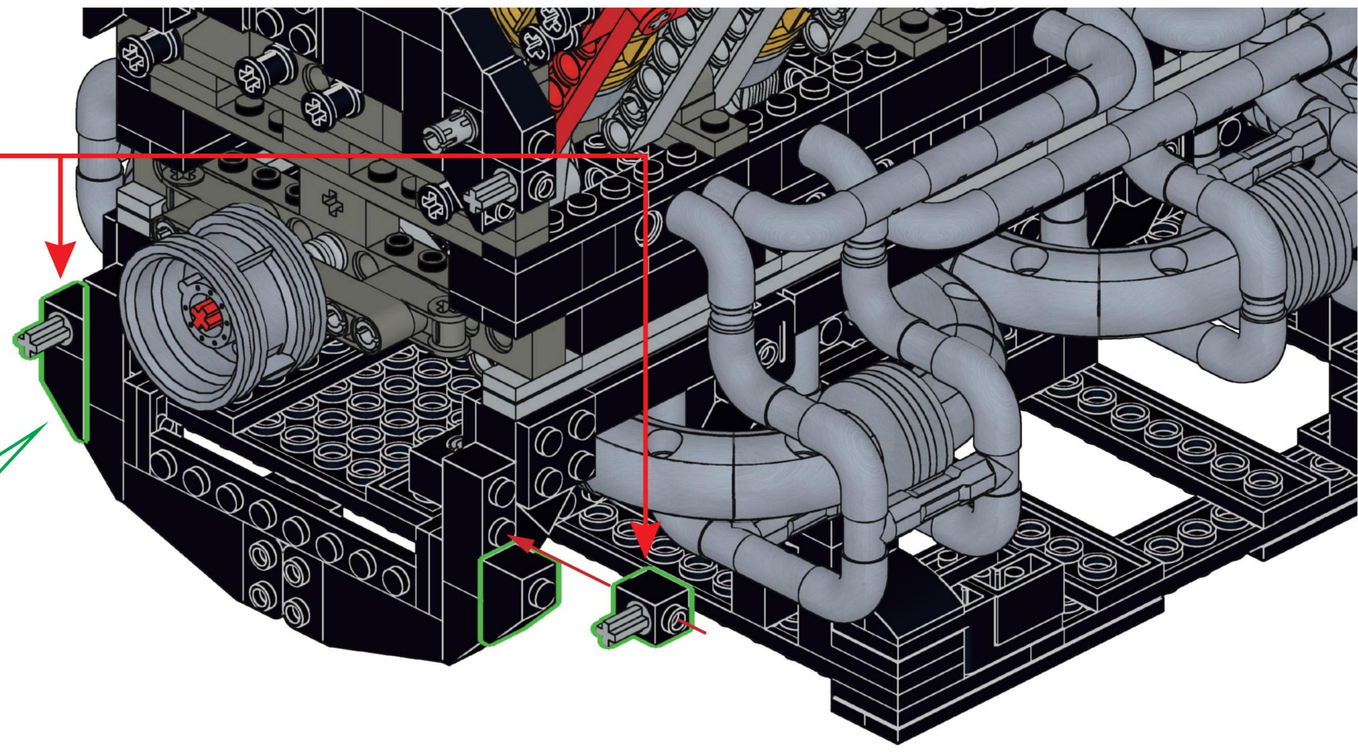

10

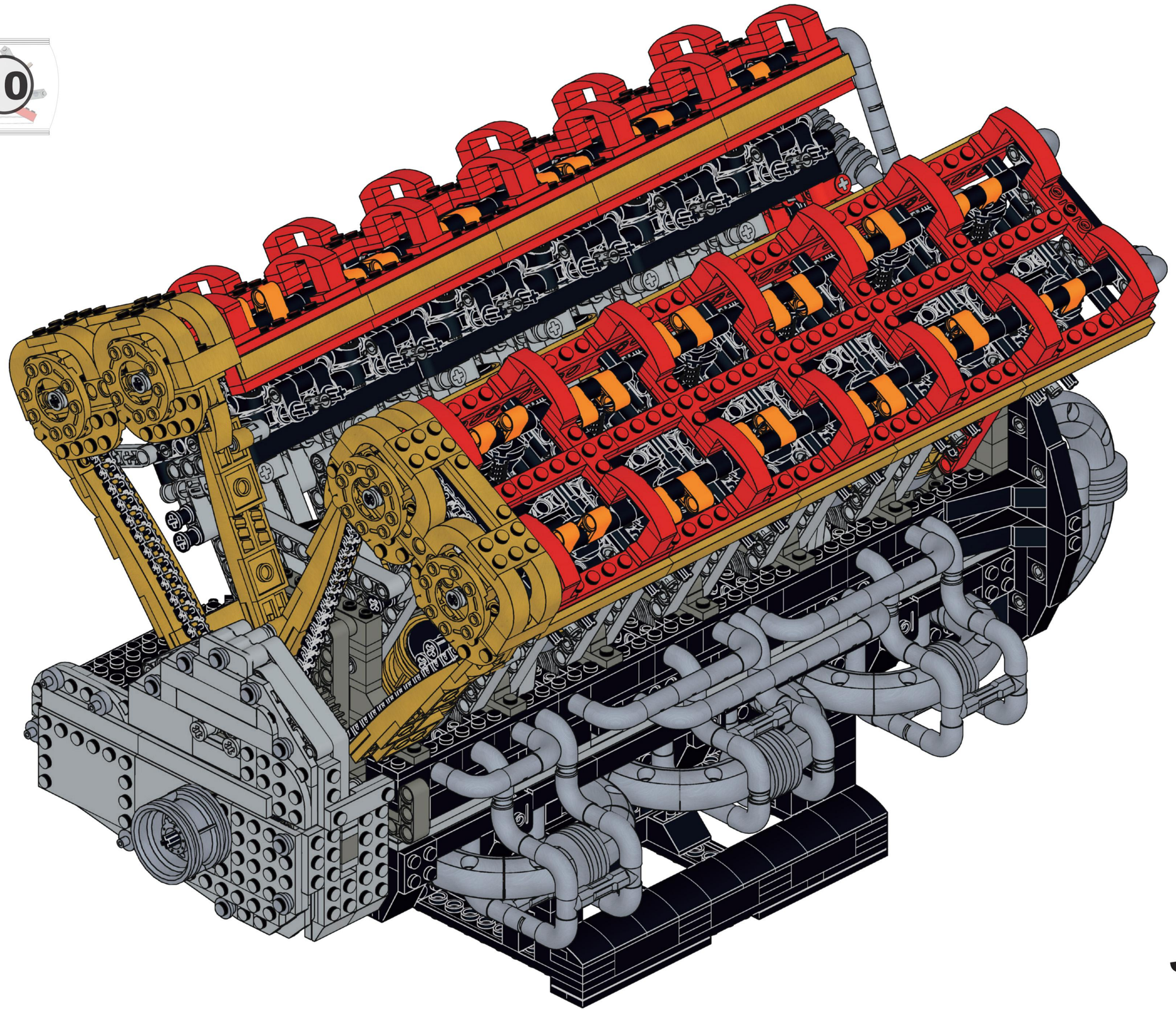

J

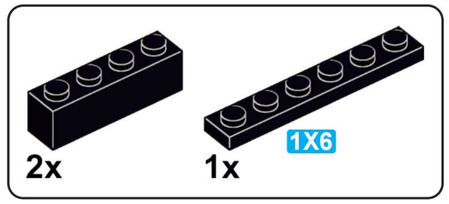

J1

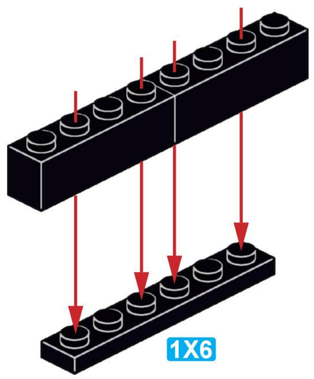

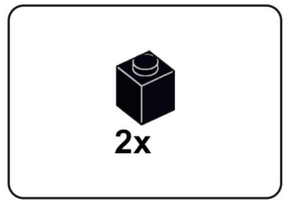

J2

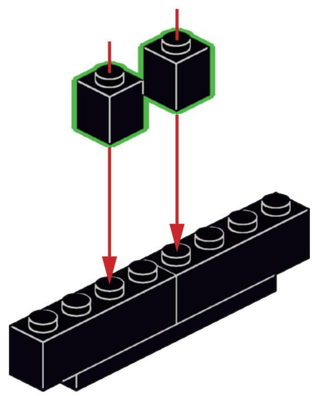

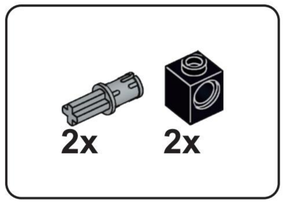

J3

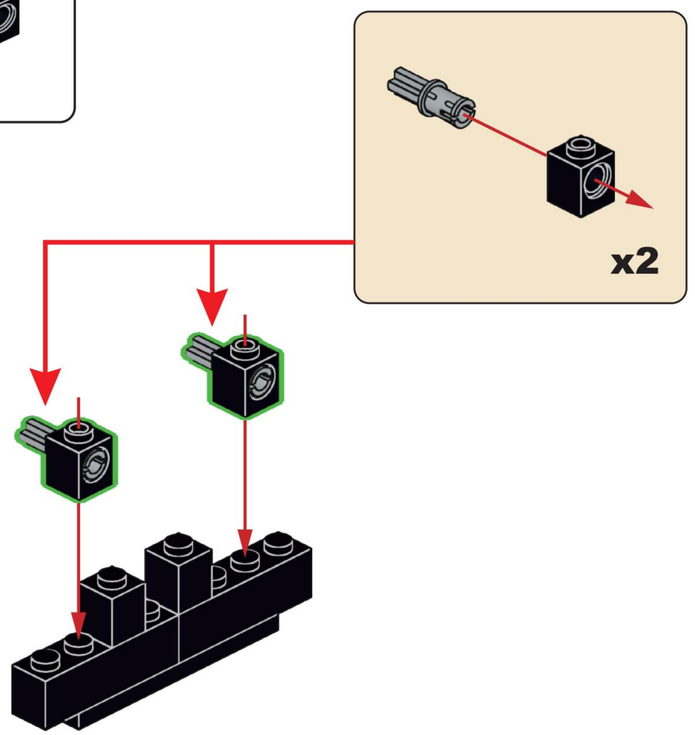

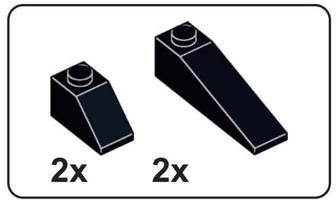

J4

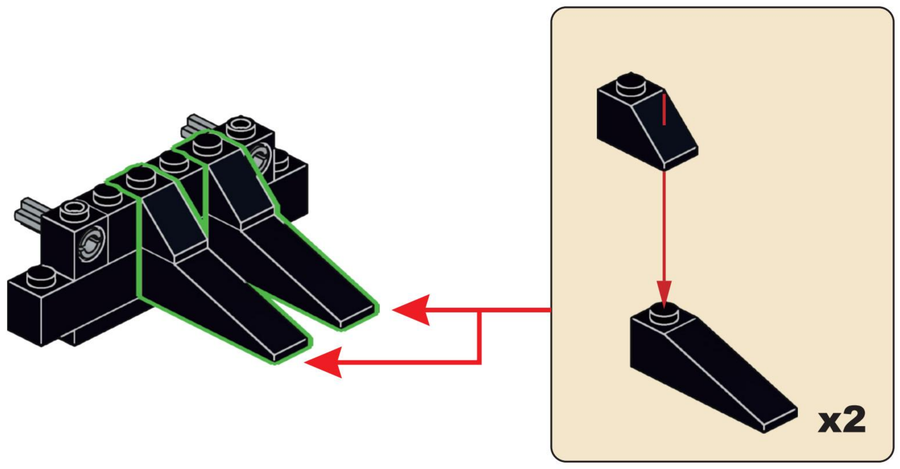

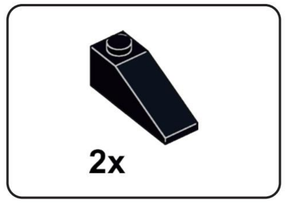

J5

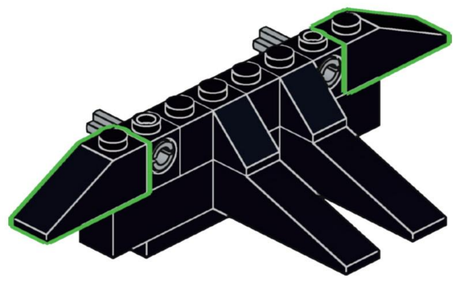

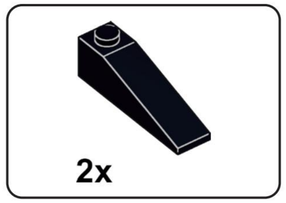

J6

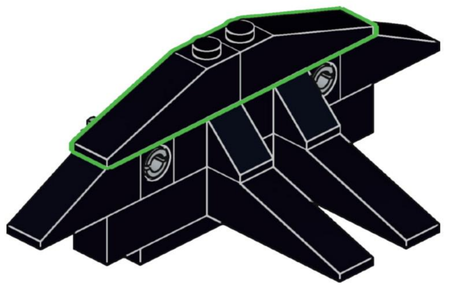

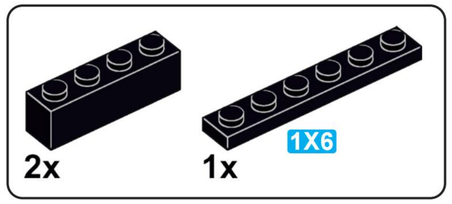

J7

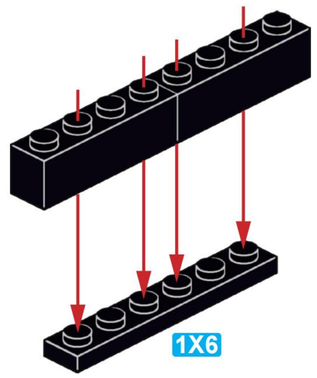

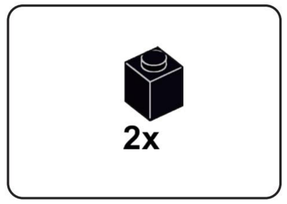

J8

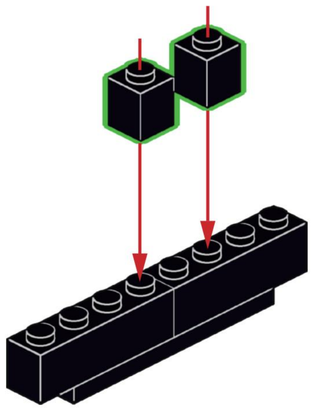

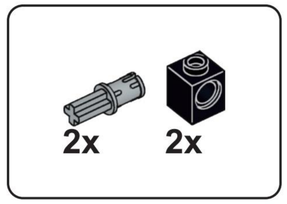

J9

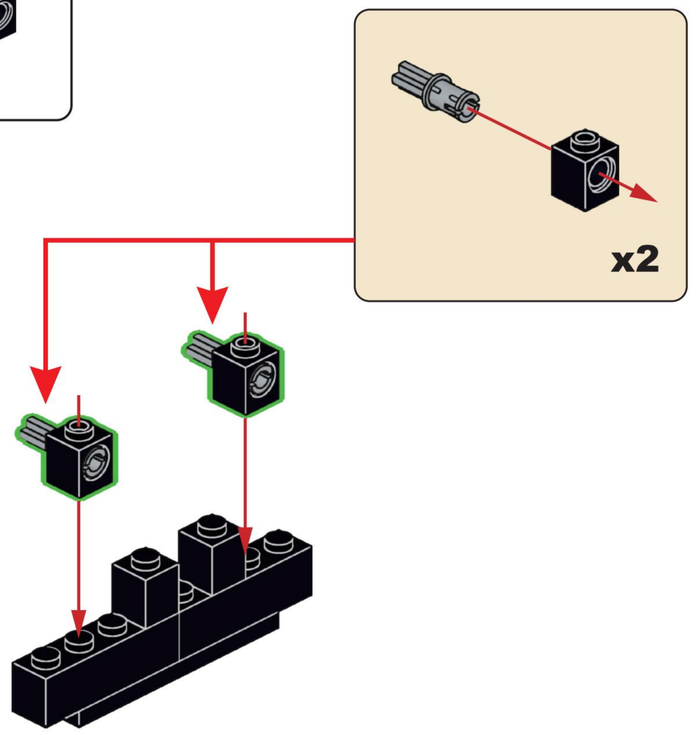

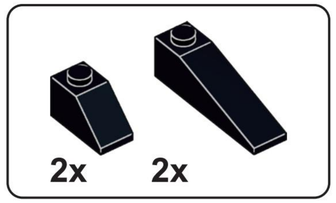

J10

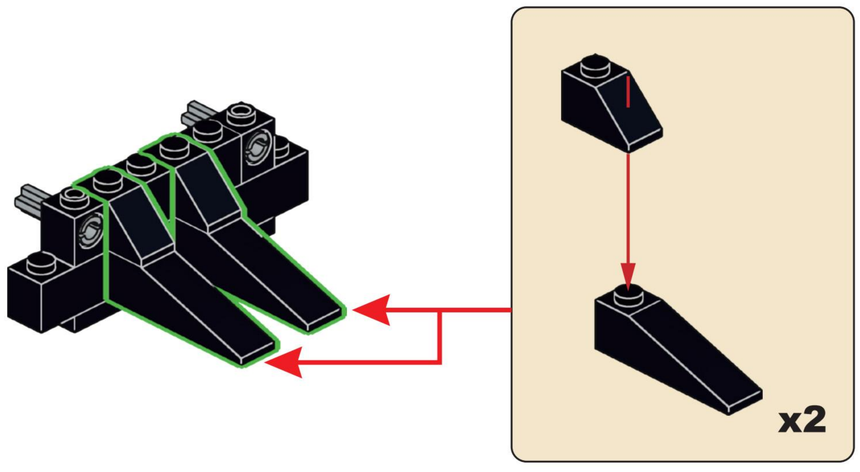

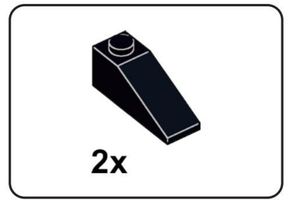

J11

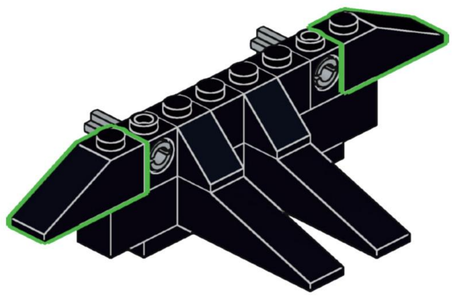

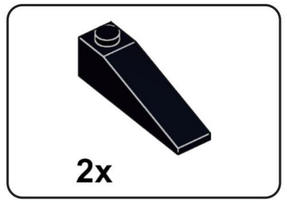

J12

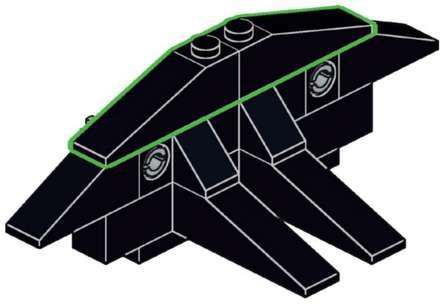

J13

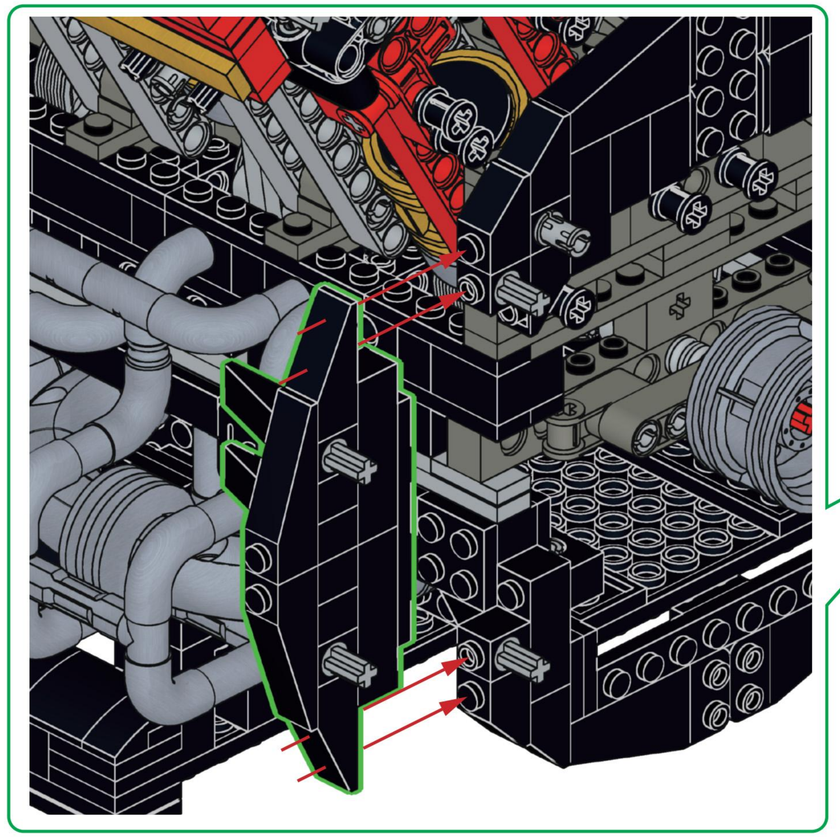

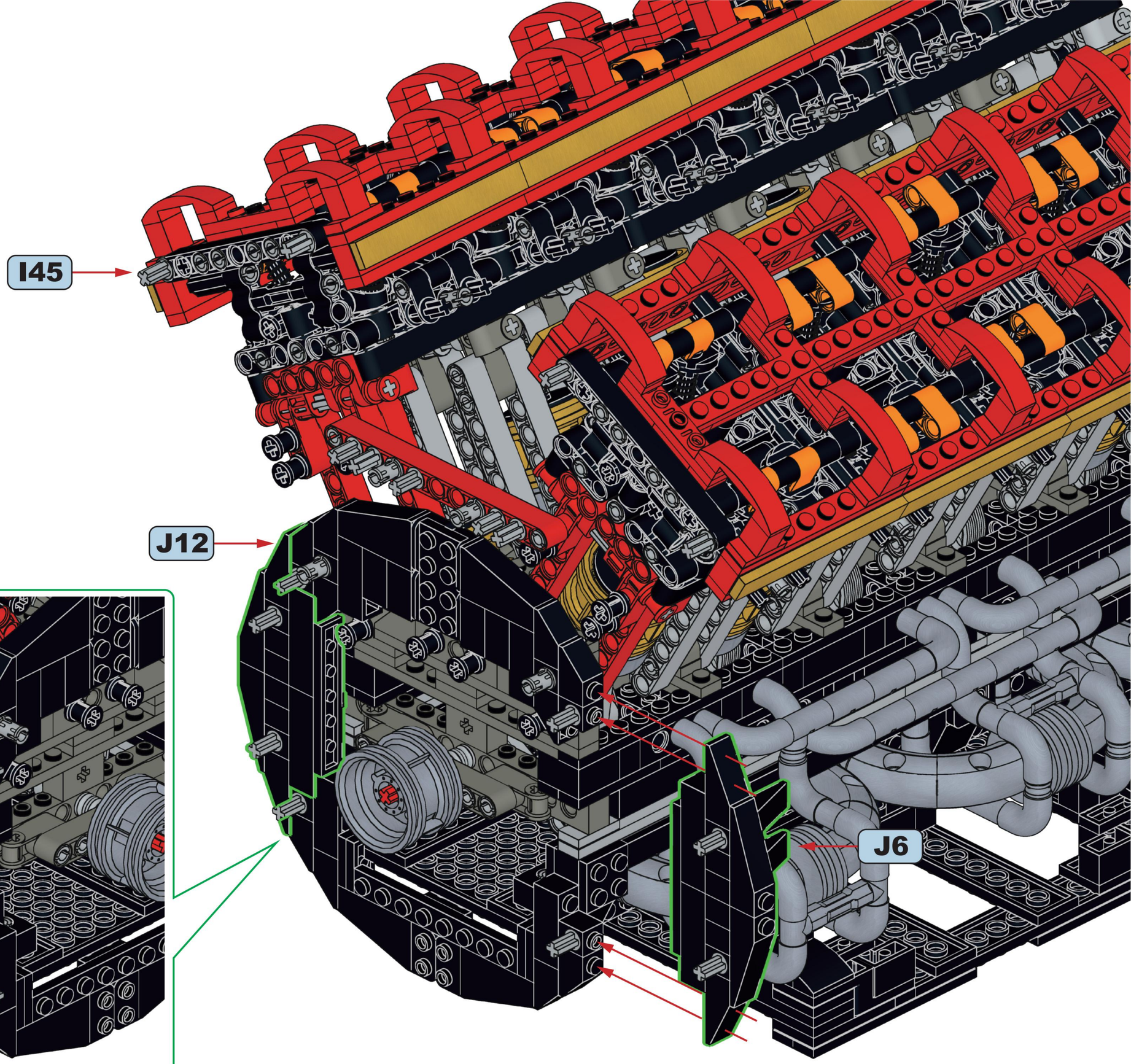

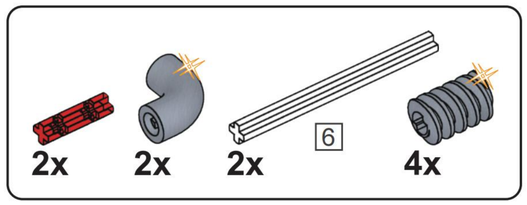

J14

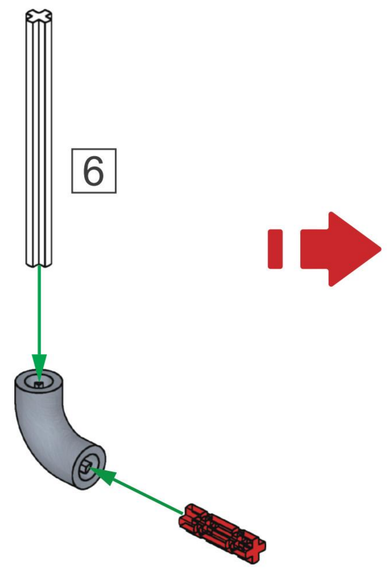

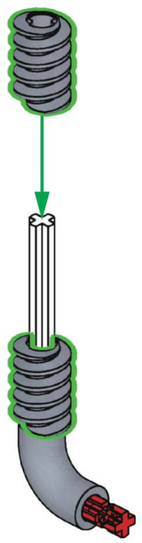

x2

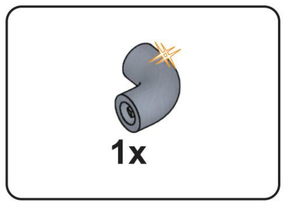

J15

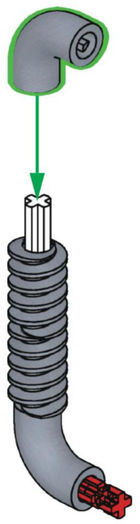

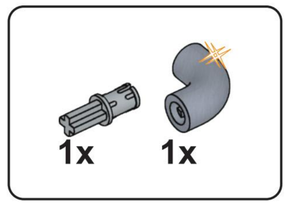

J16

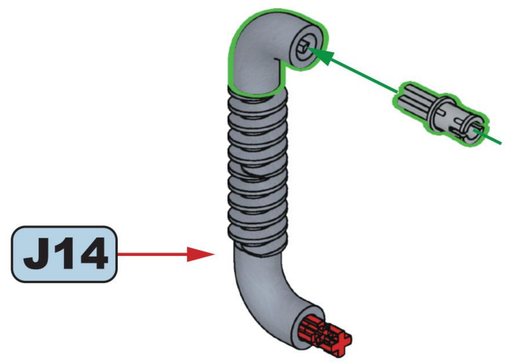



J17



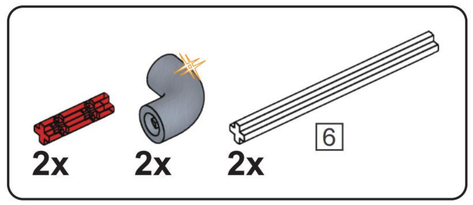

J18

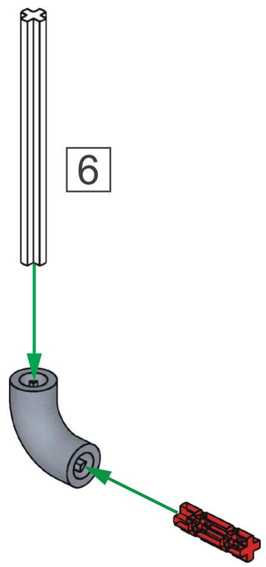

x2

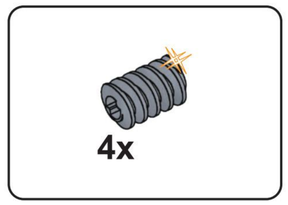

J19

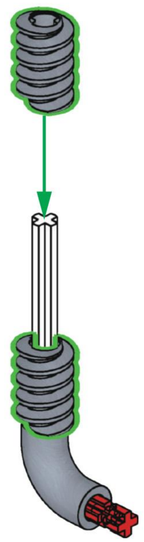

x2

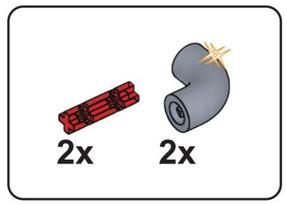

J20

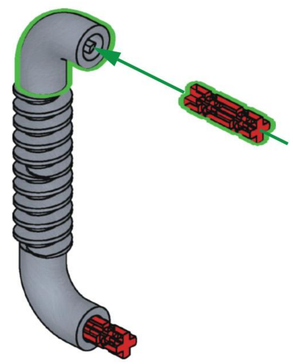



x2

J21

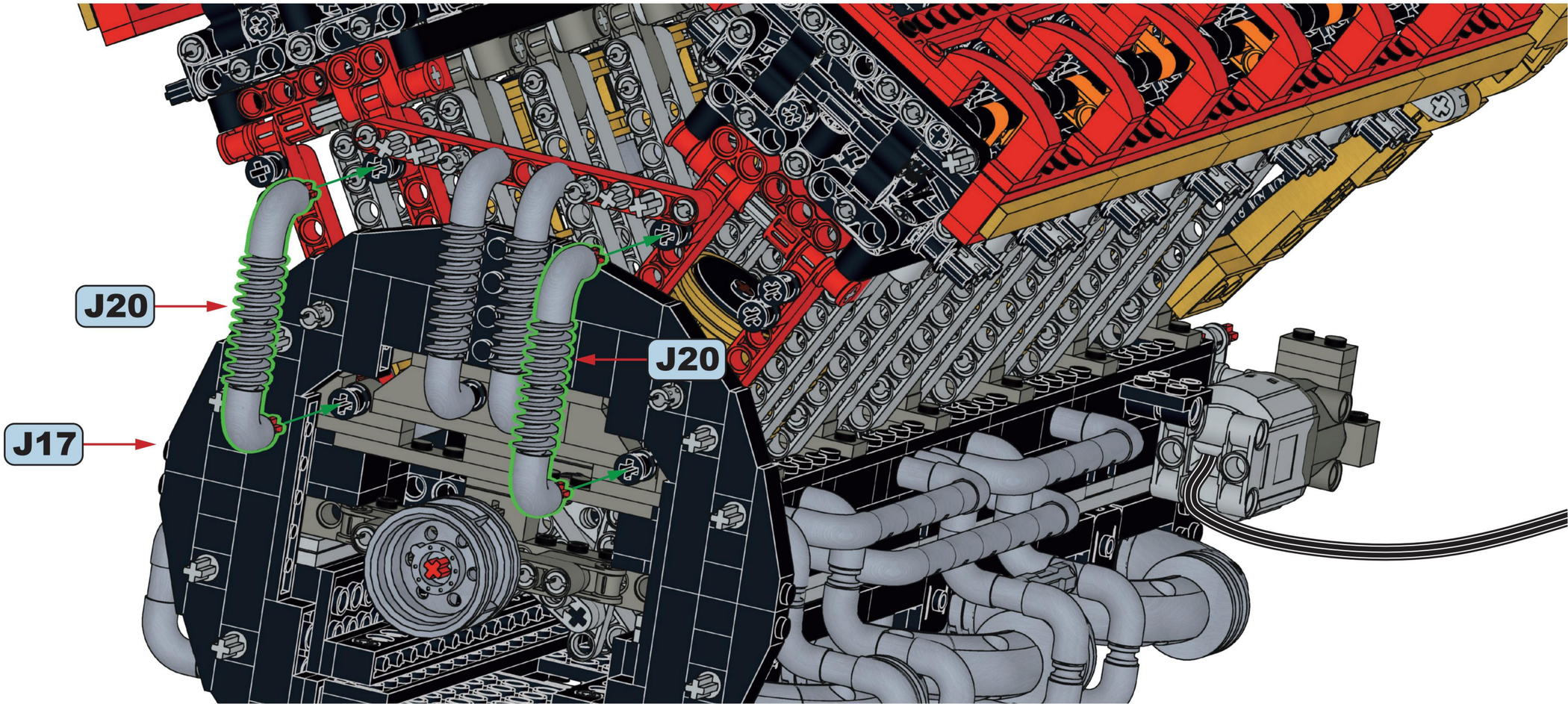

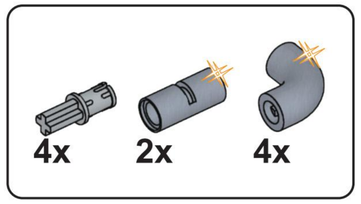

J22

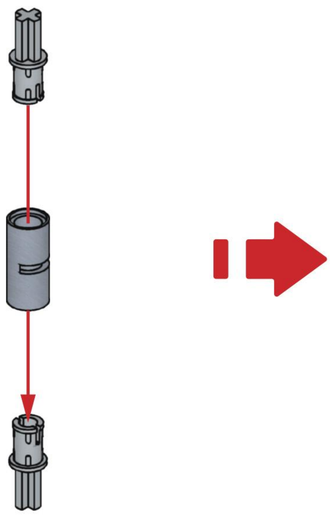

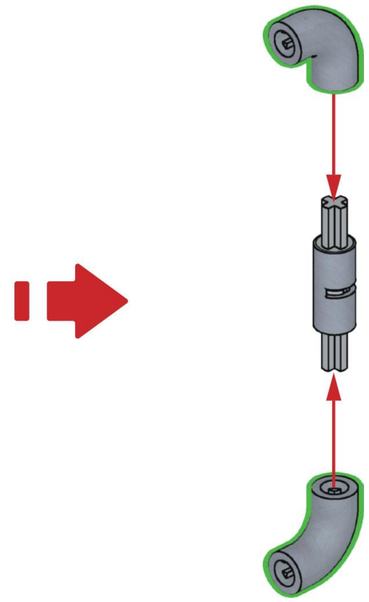

x2

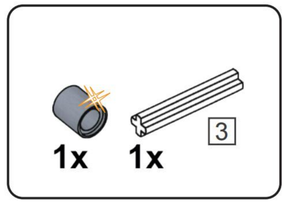

J23

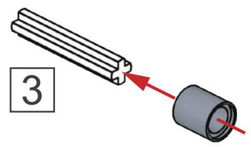

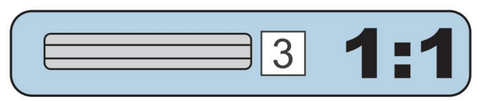

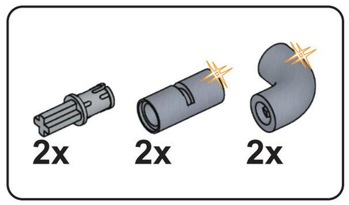

J24

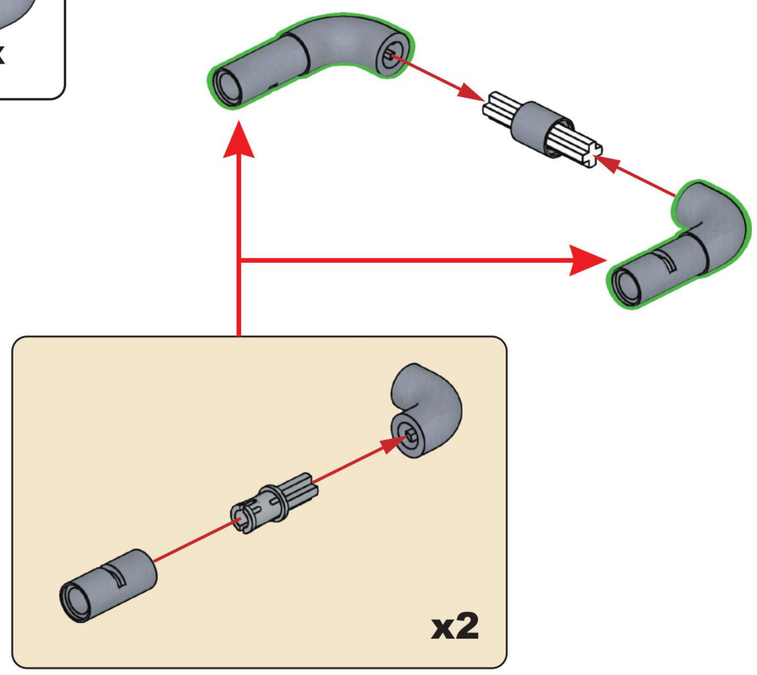

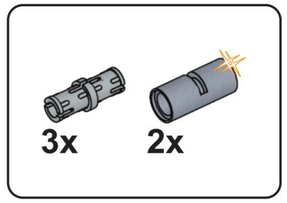

J25

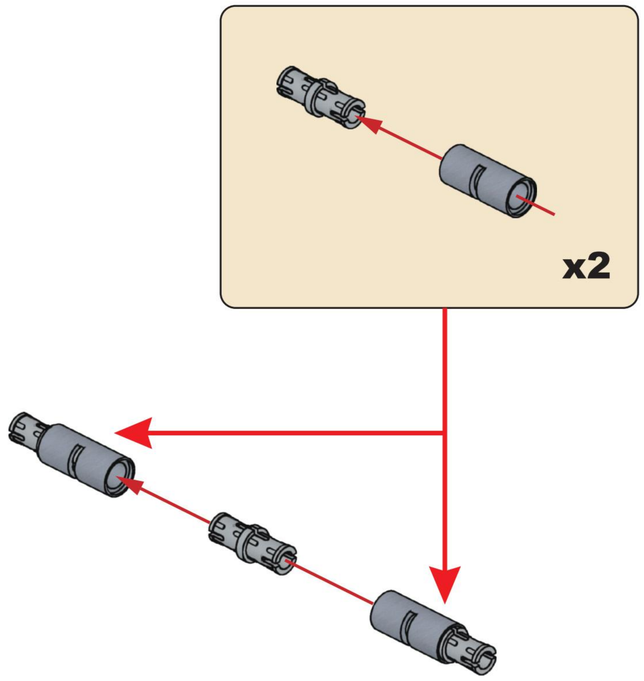

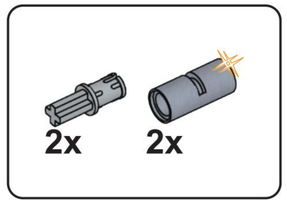

J26

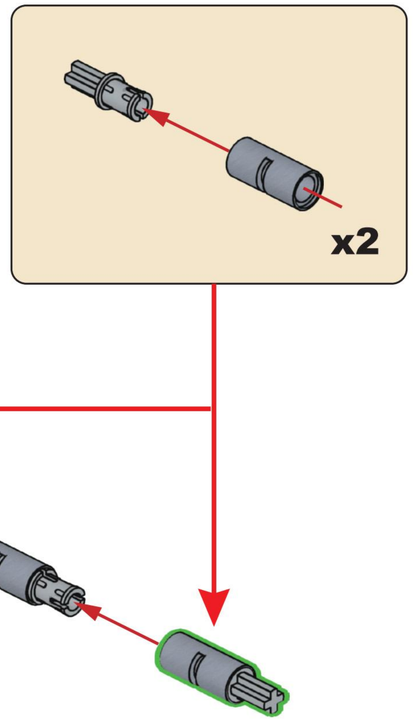

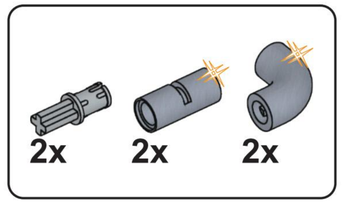

J27

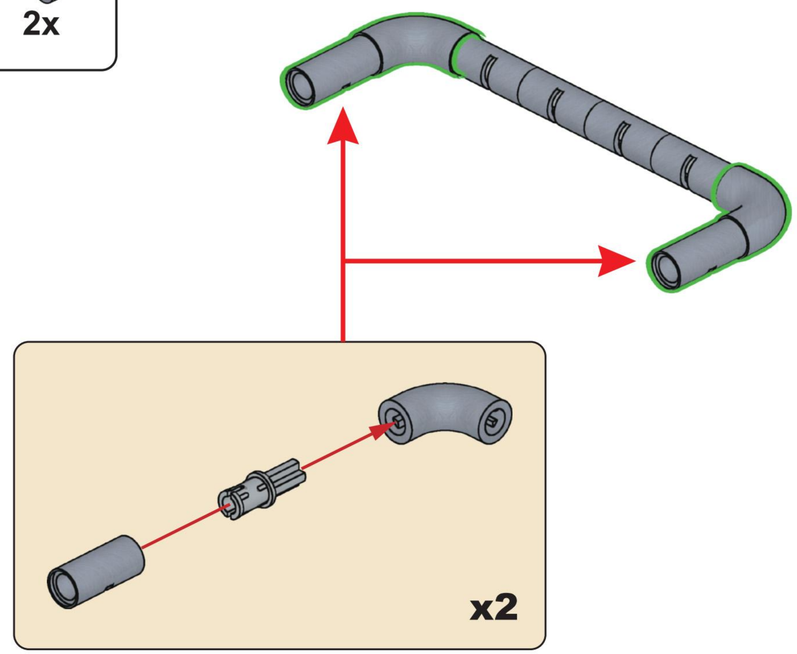

J28

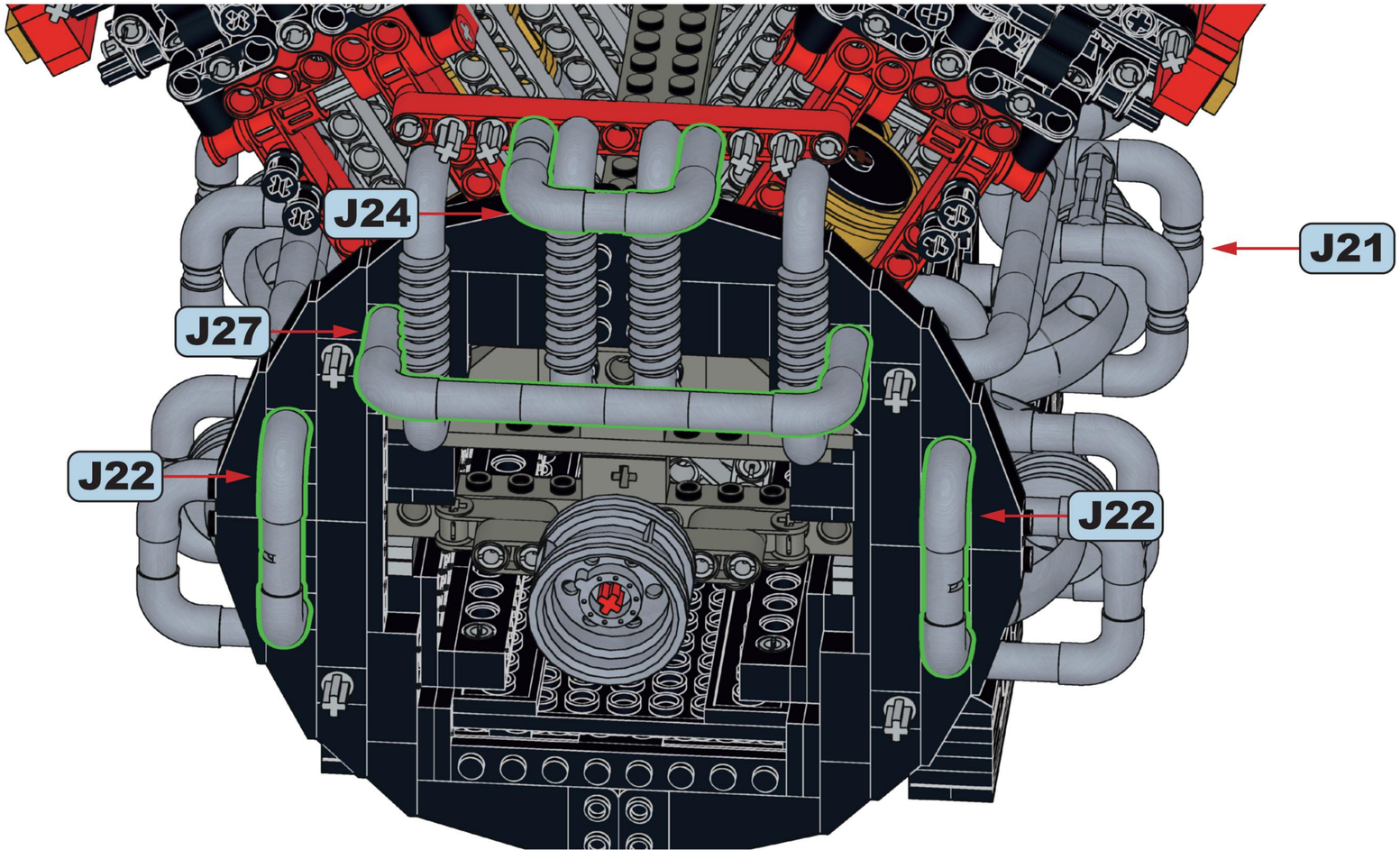

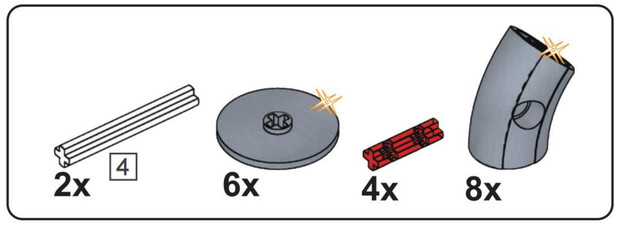

J29

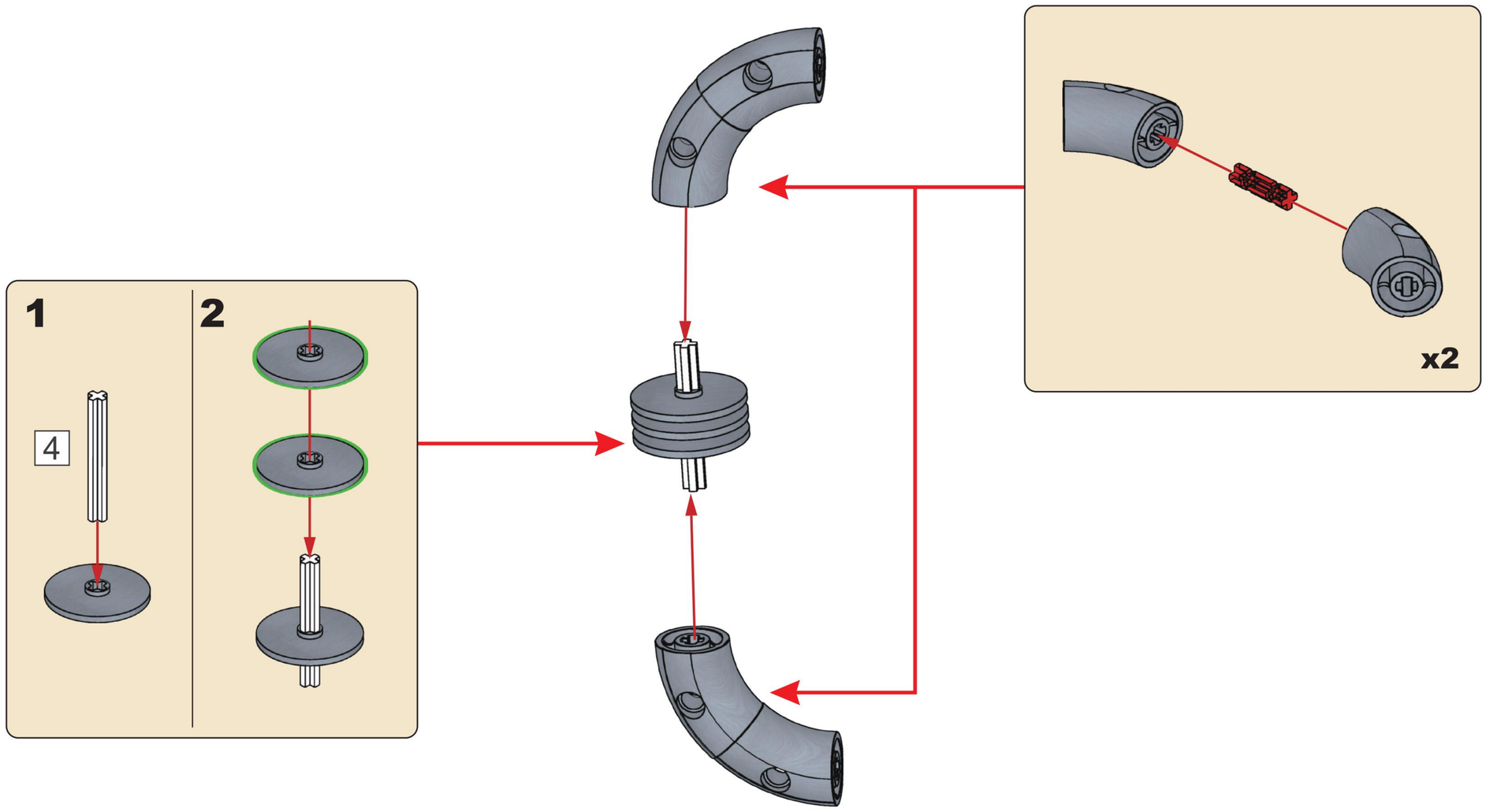

x2

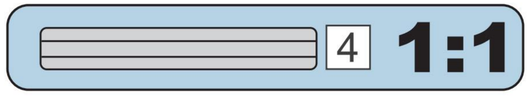

J30

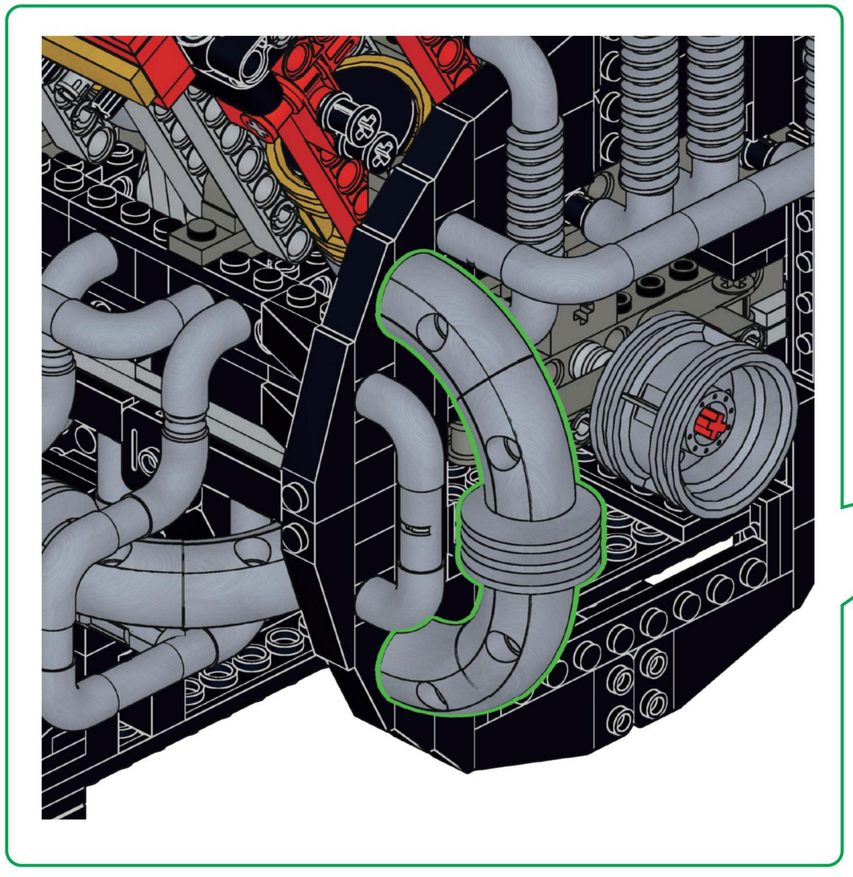

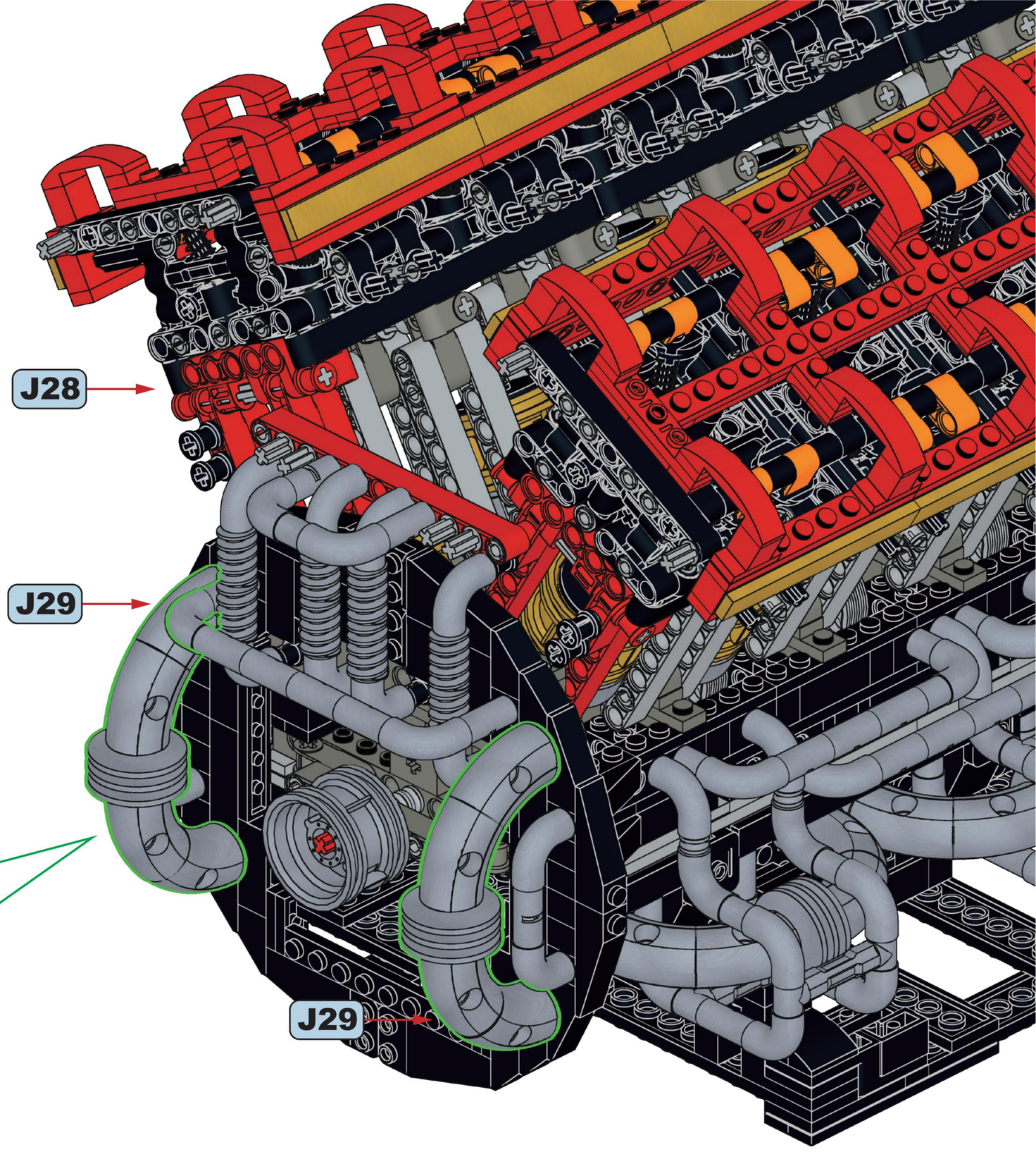

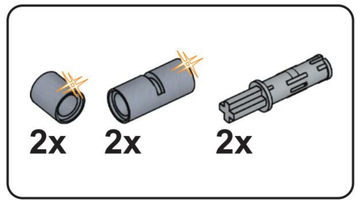

J31



x2

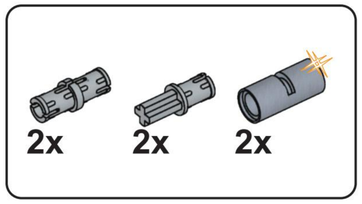

J32

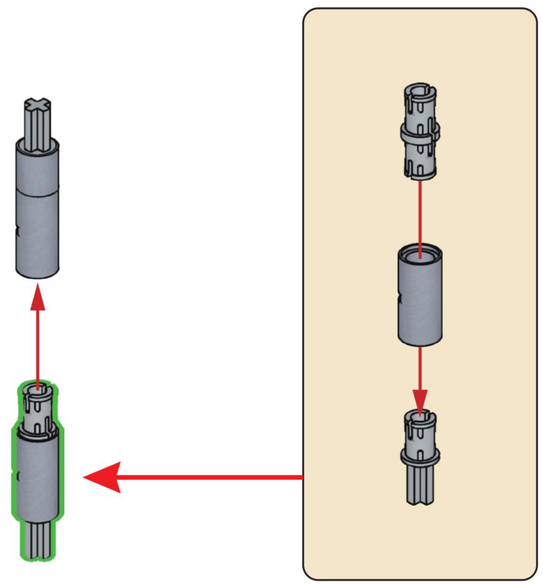

x2

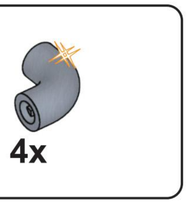

J33

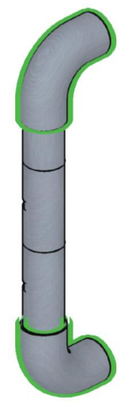

x2

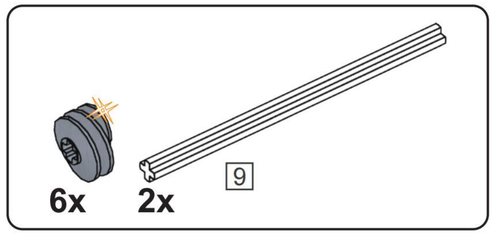

J34

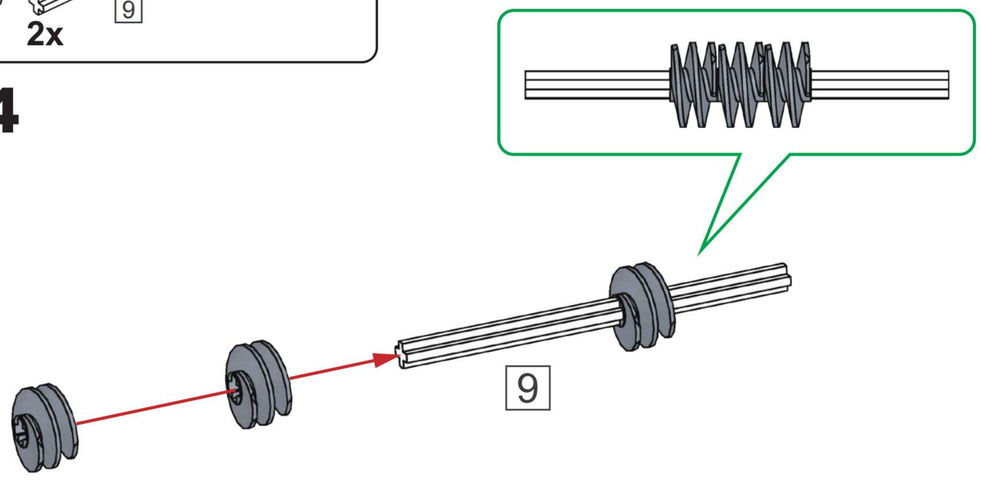



x2

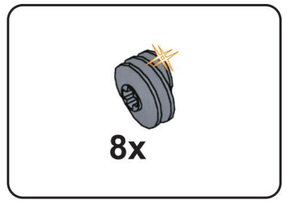

J35

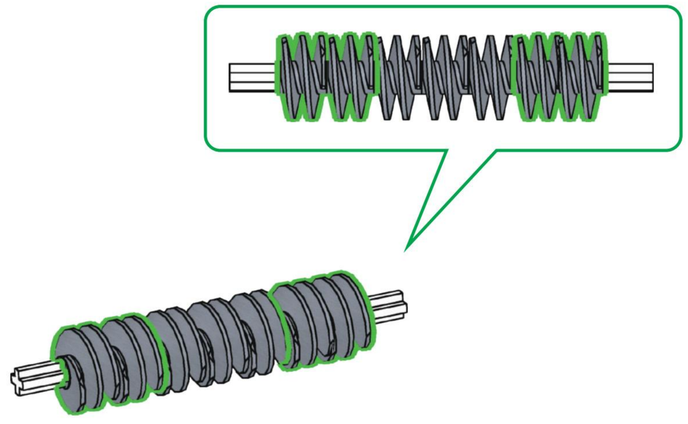

x2

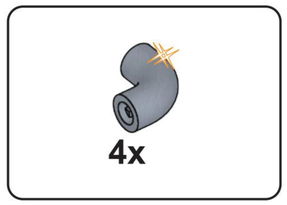

J36

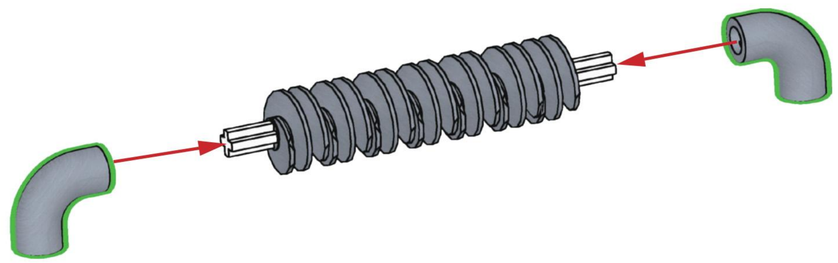

x2

J37

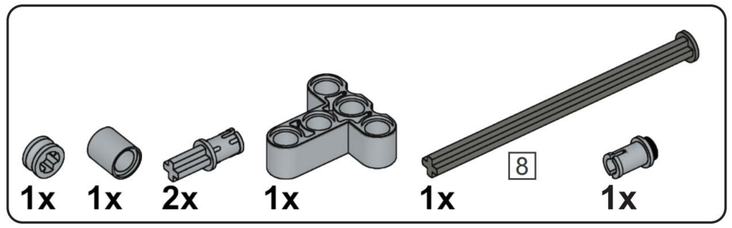

J38

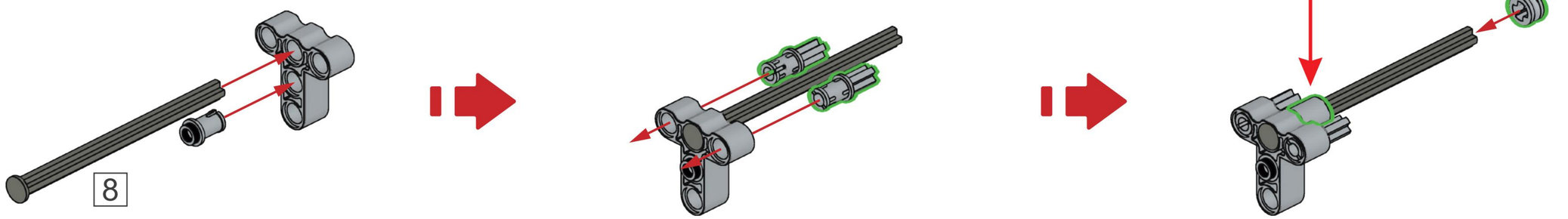

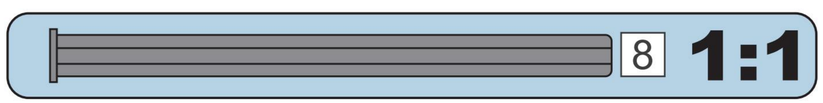

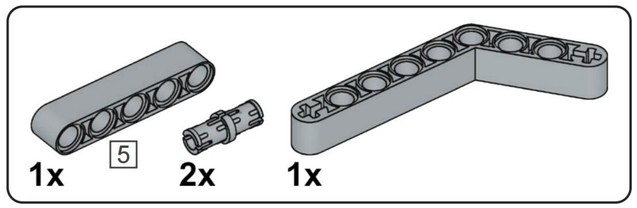

J39

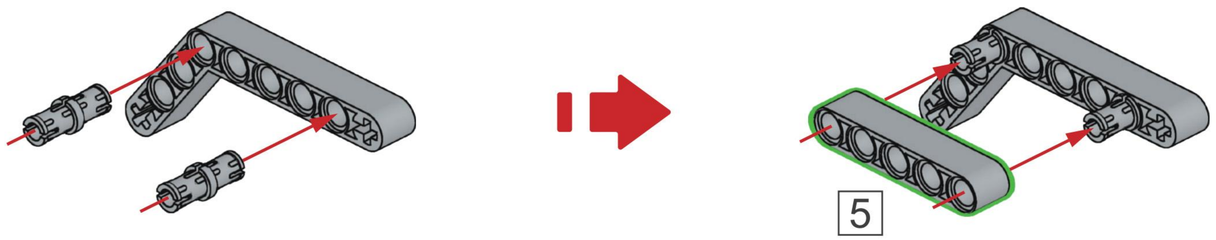

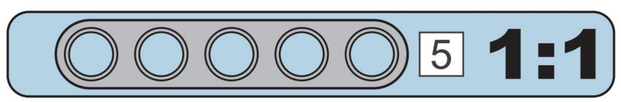

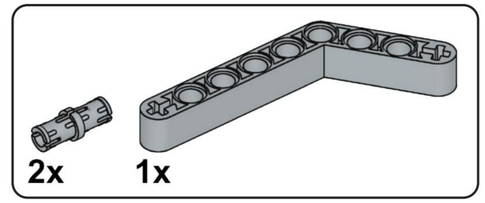

J40

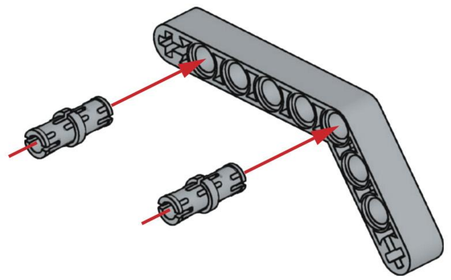

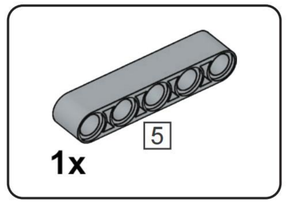

J41

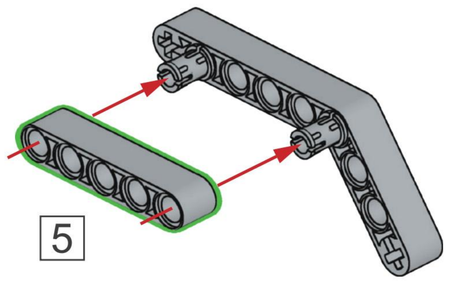

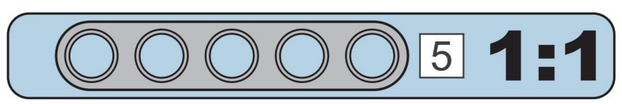

J42

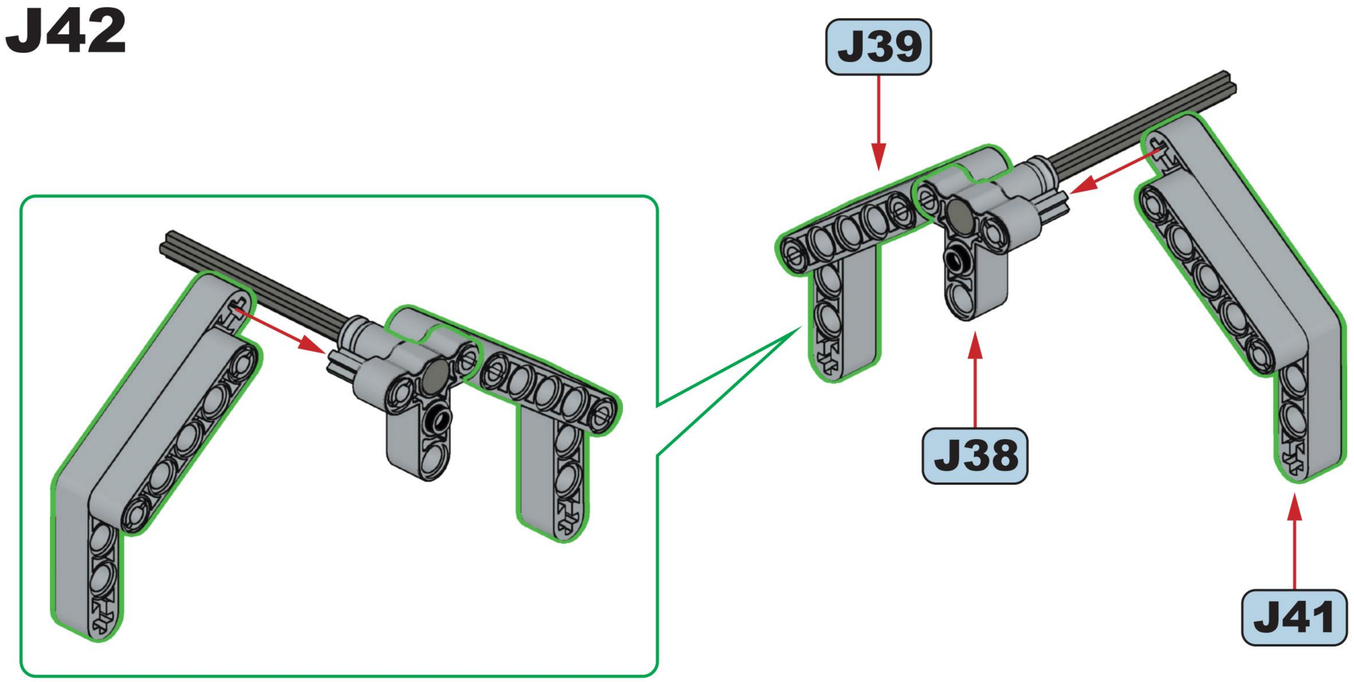

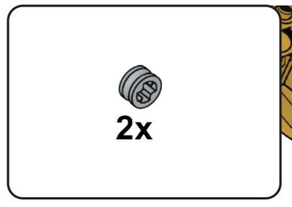

J43

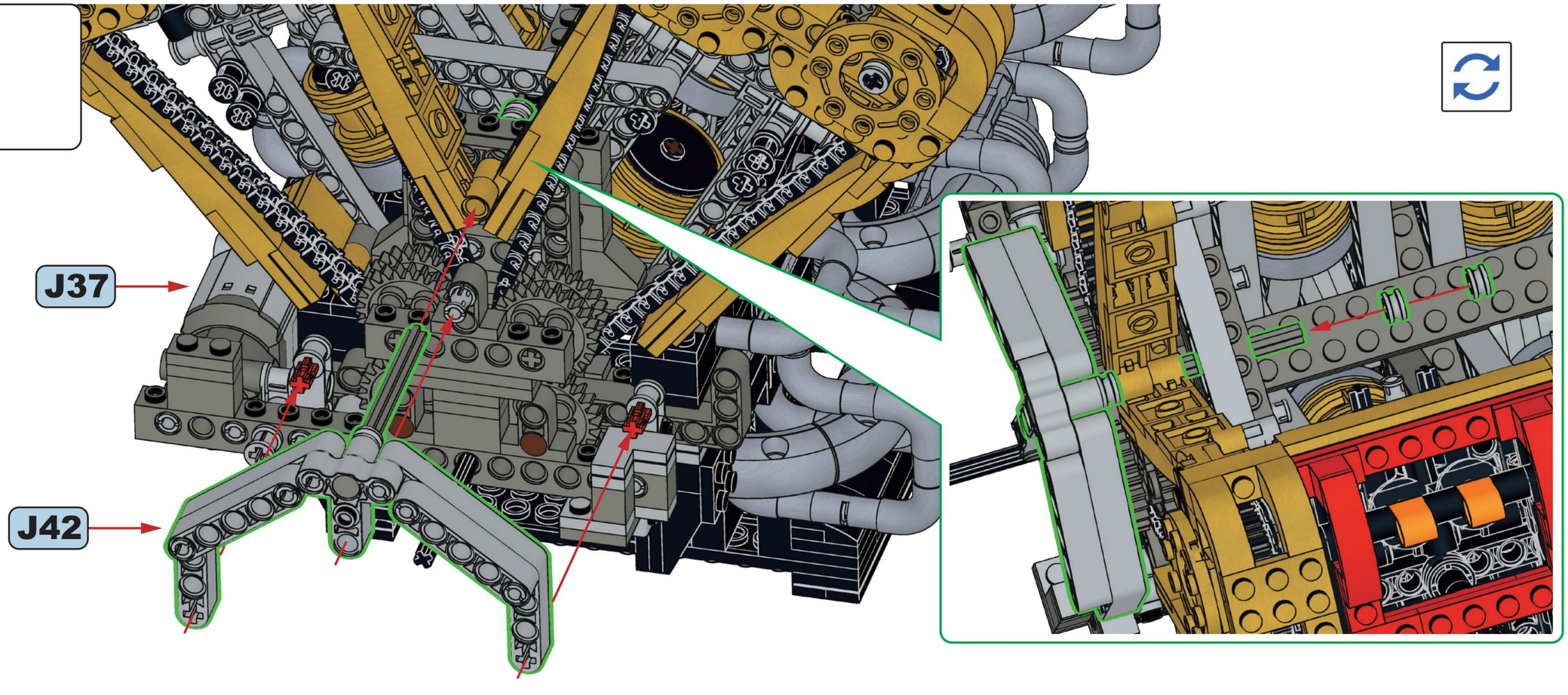

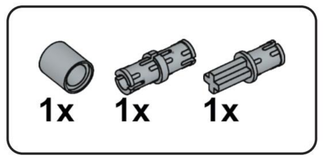

J44

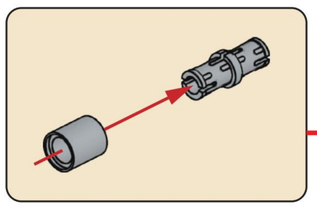

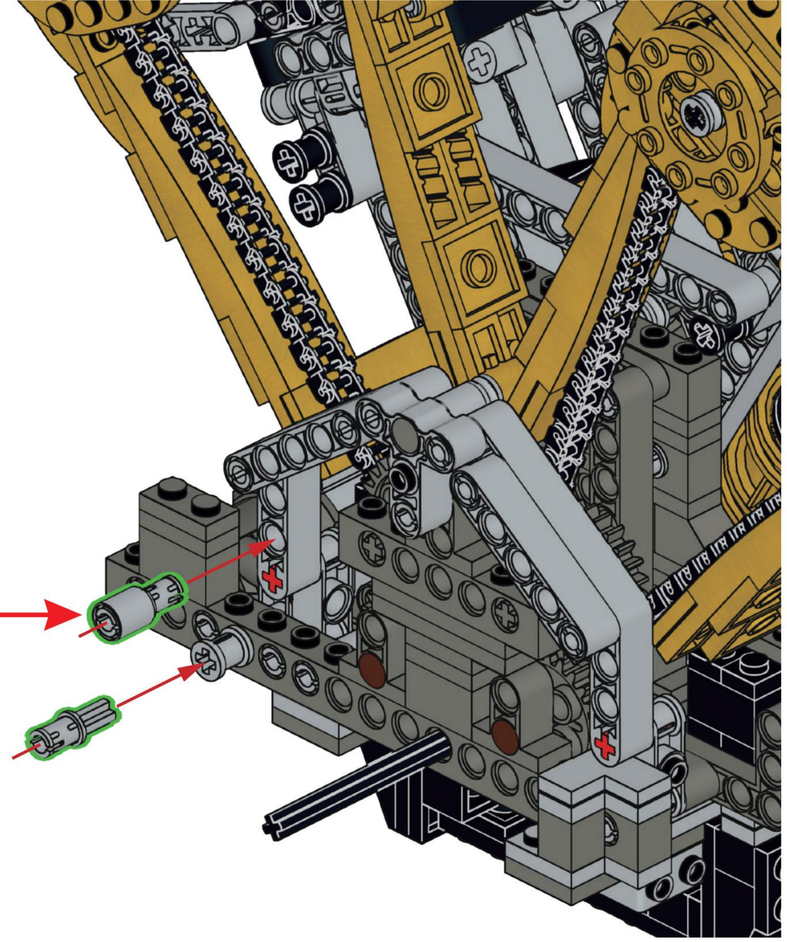

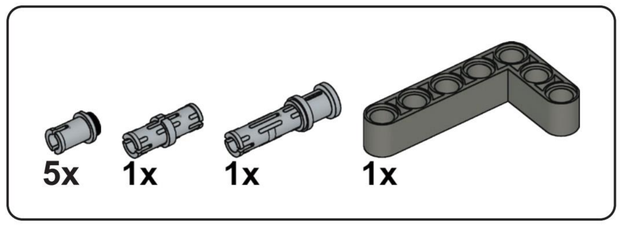

J45

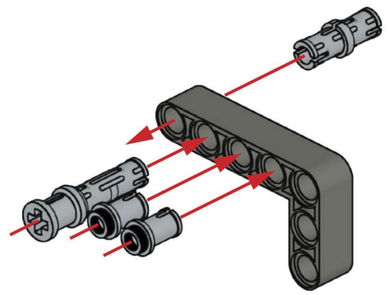

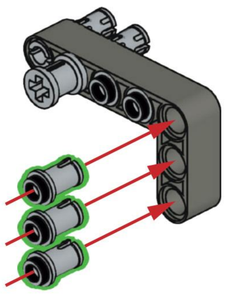

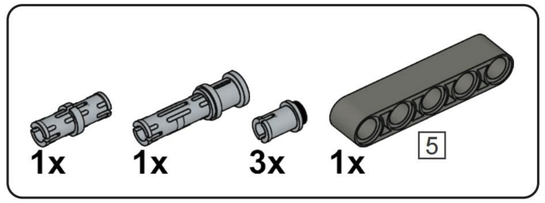

J46

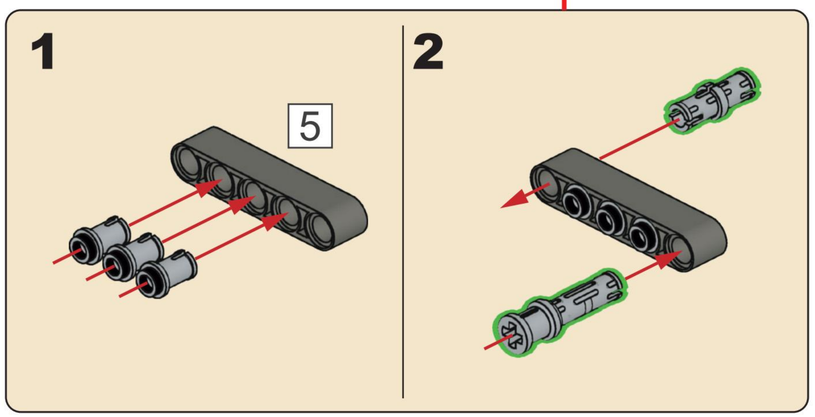

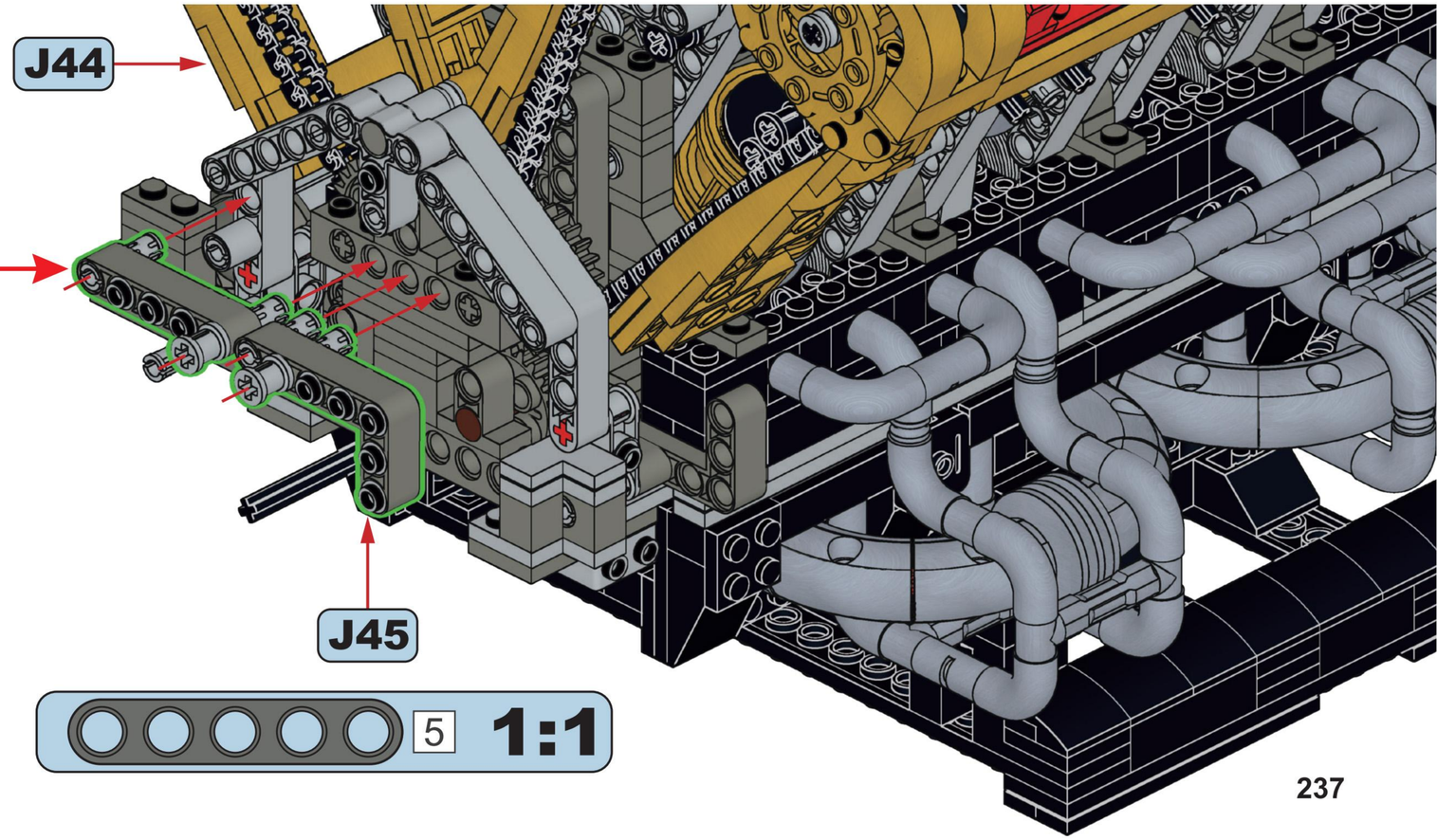

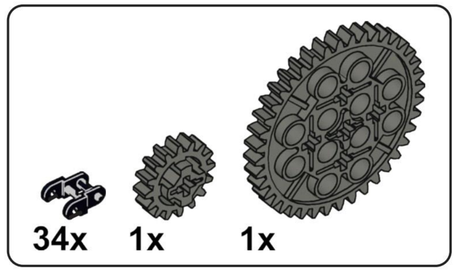

J47

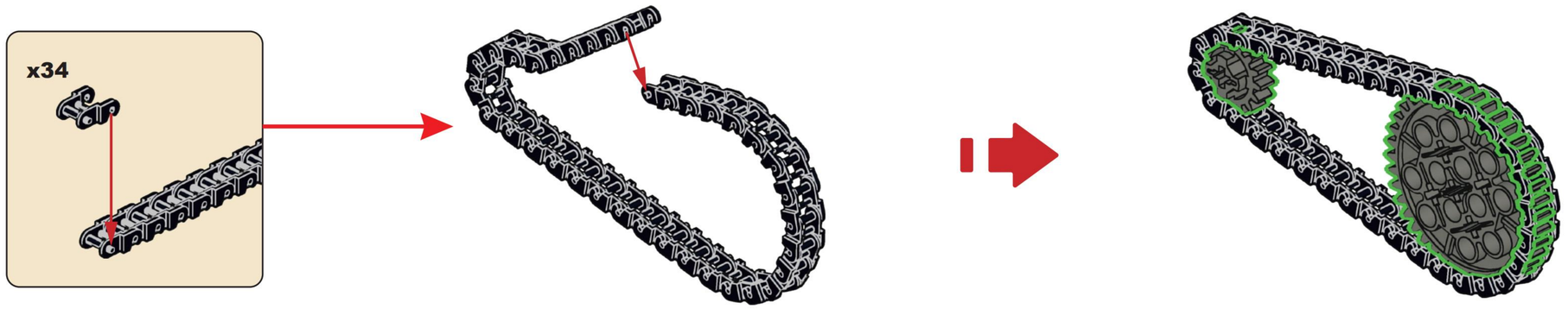

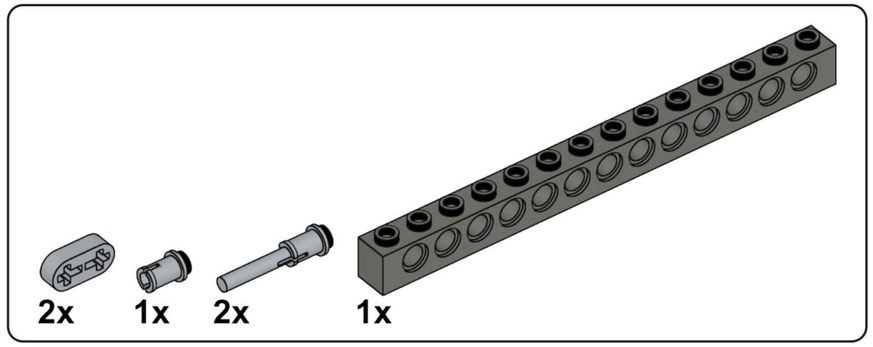

J48

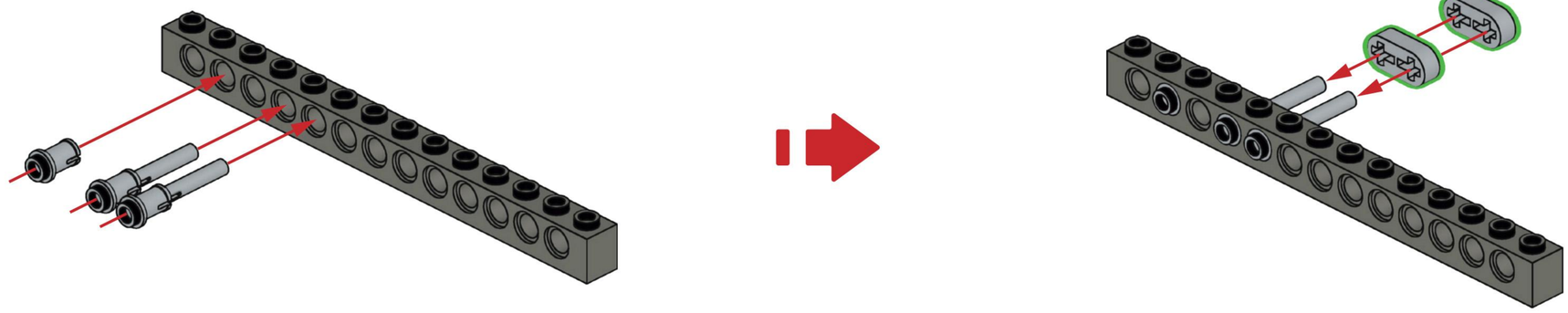

6x

J49

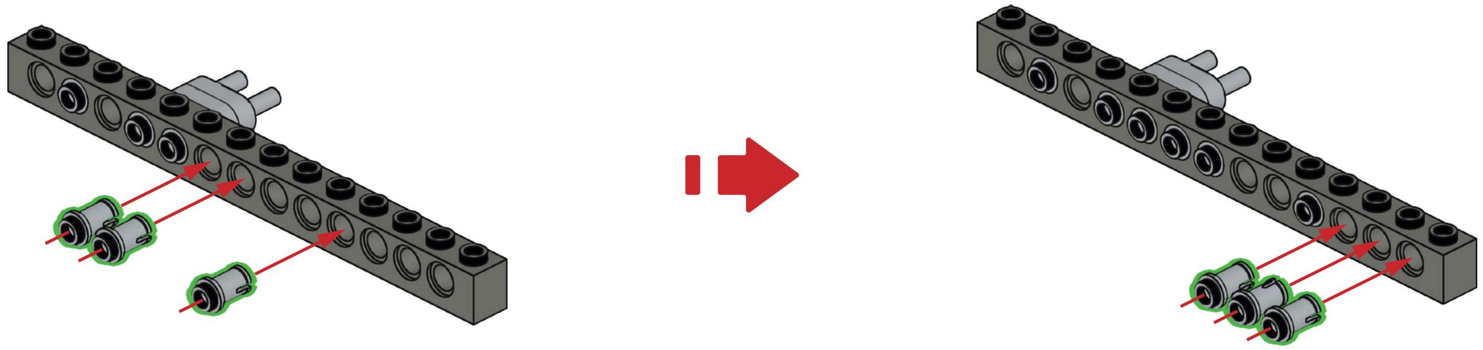

1x 4

J50

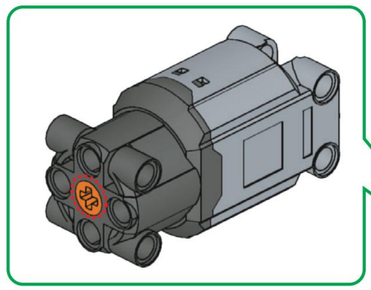

4 1:1

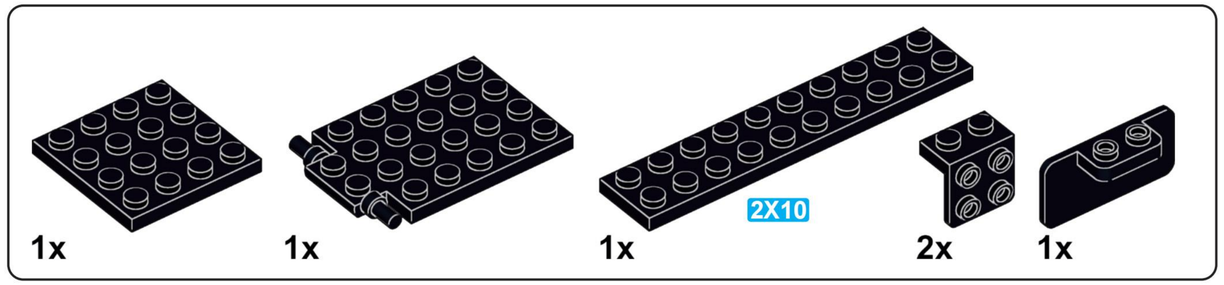

J51

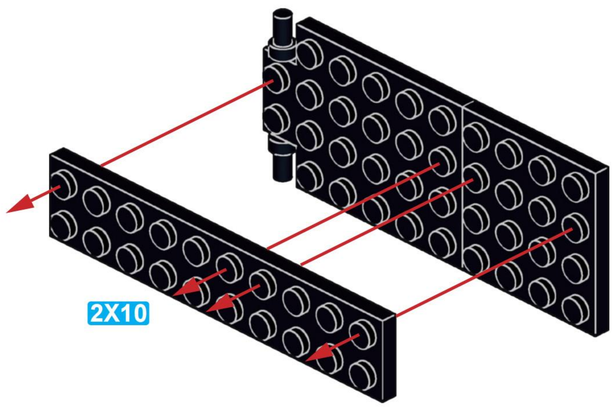

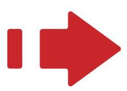



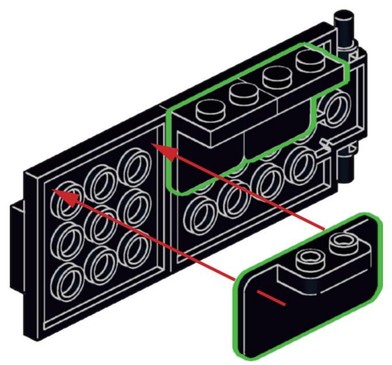

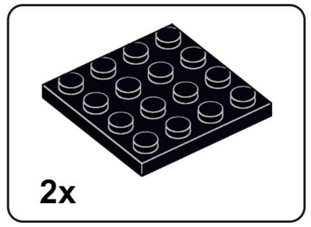

J52

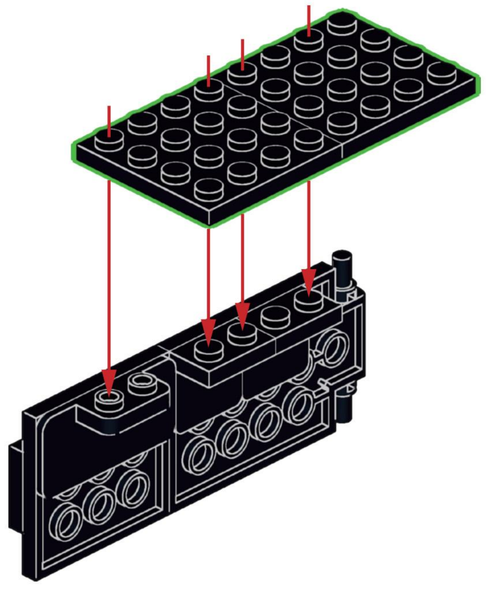

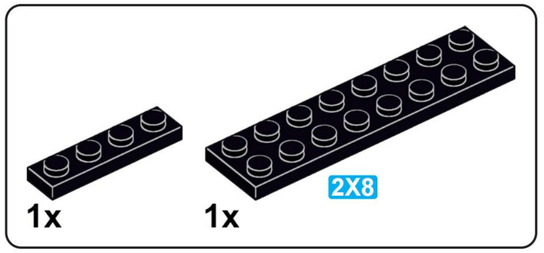

J53

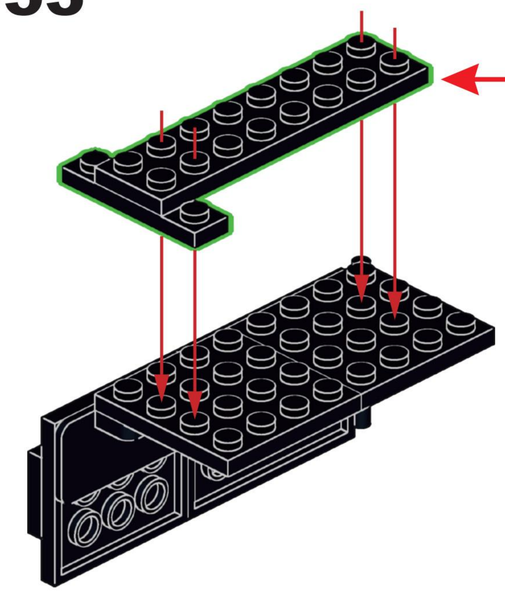

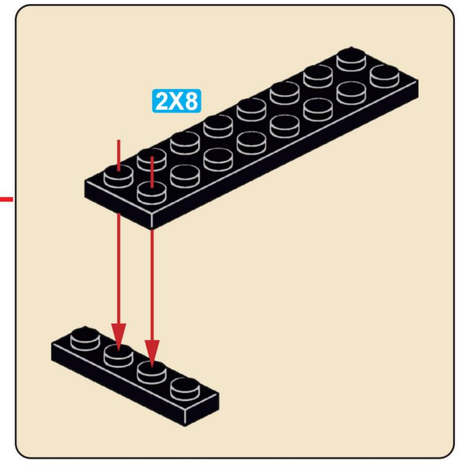

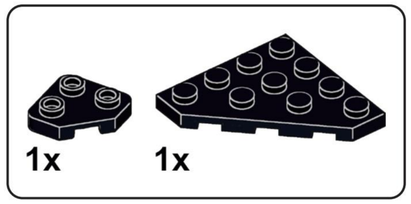

J54

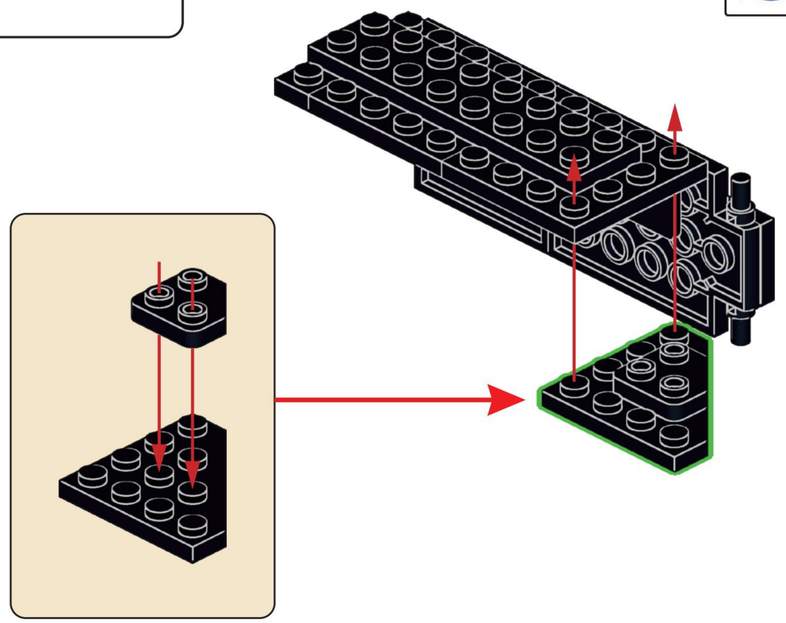

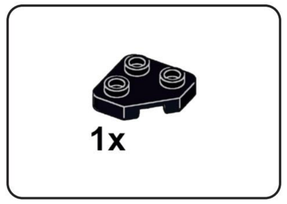

J55

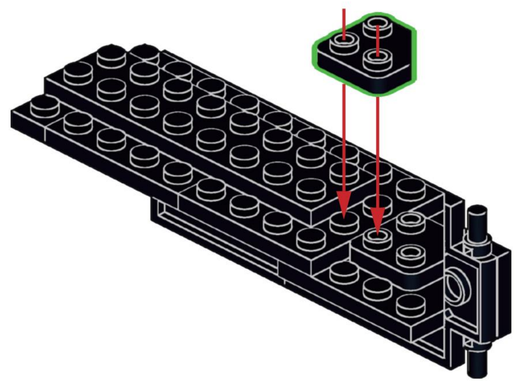

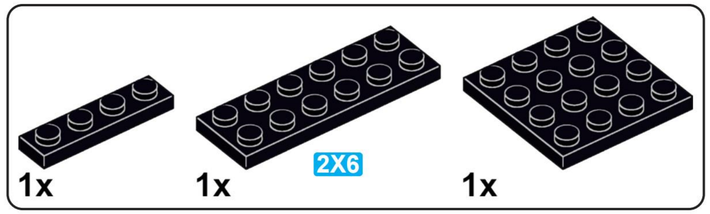

J56

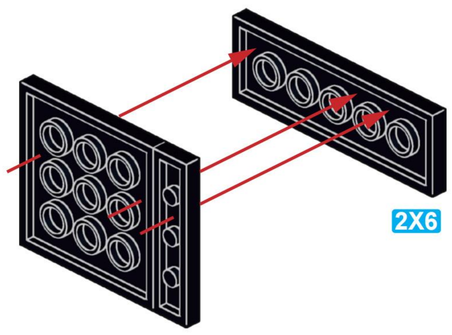

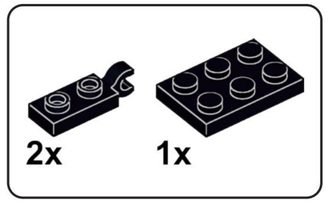

J57

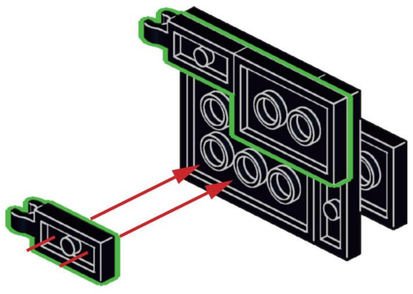

J58

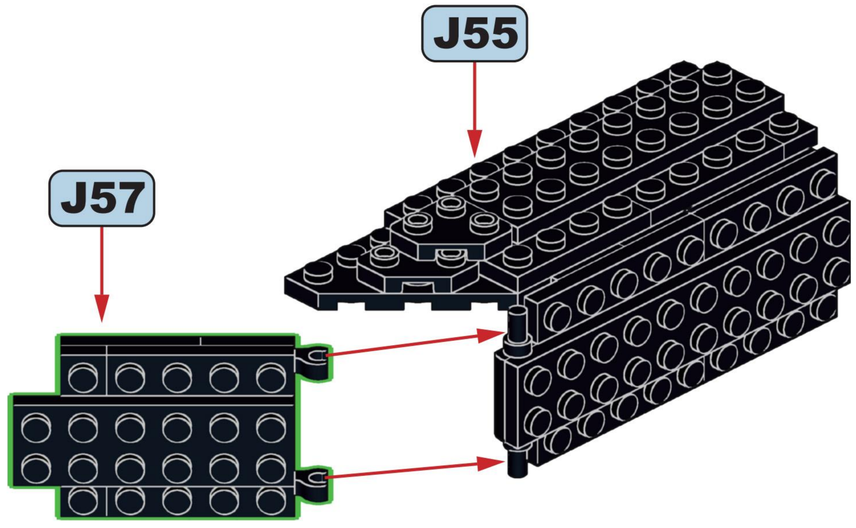

J59

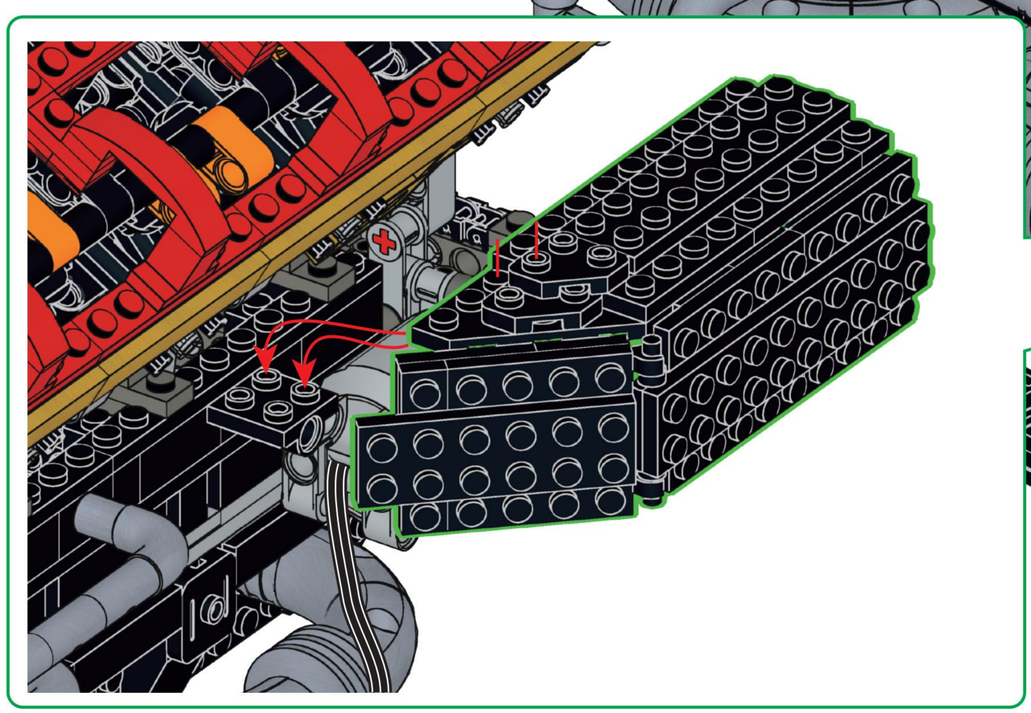

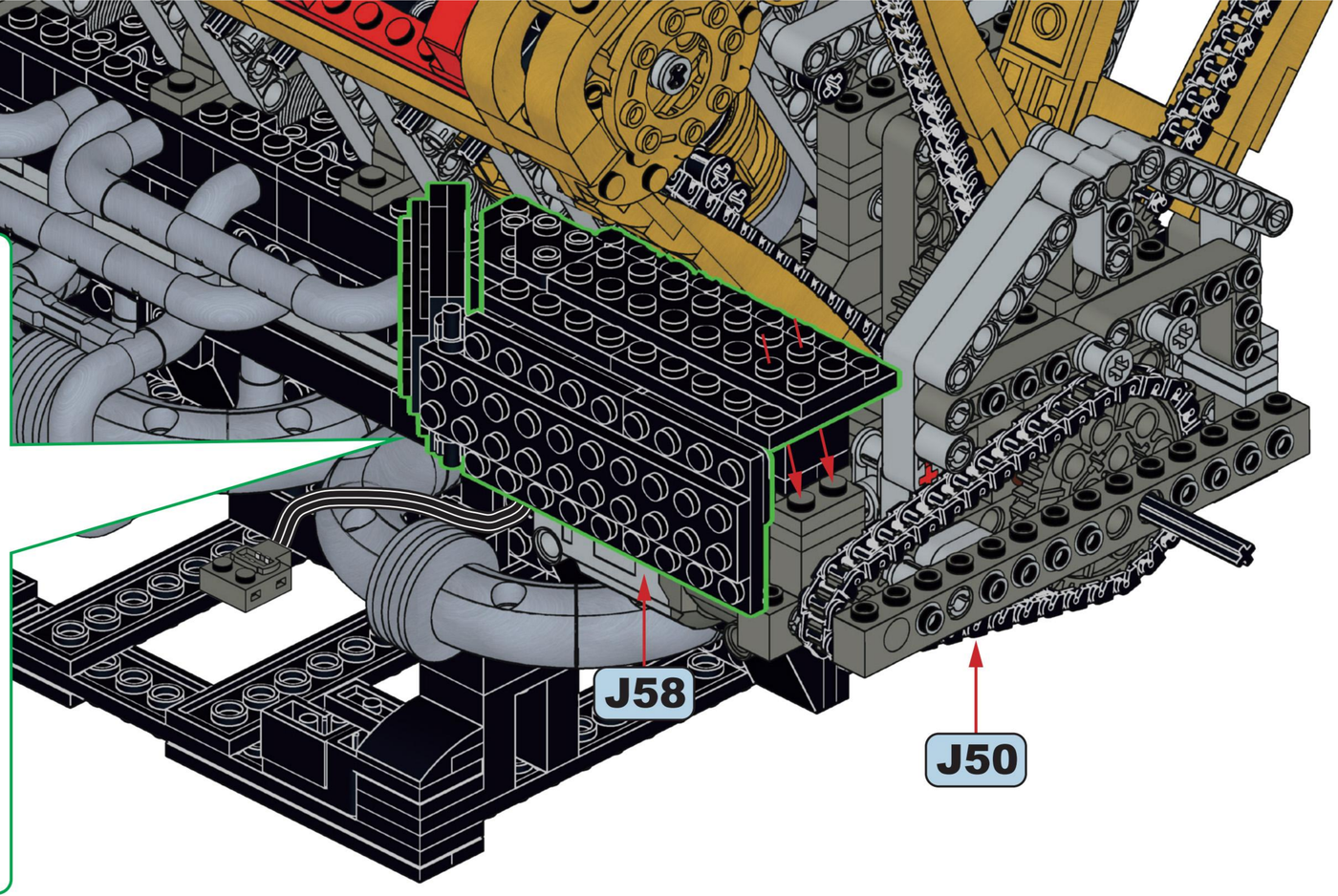

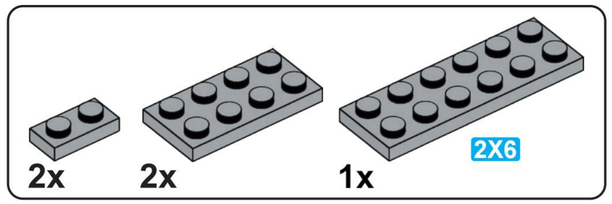

J60

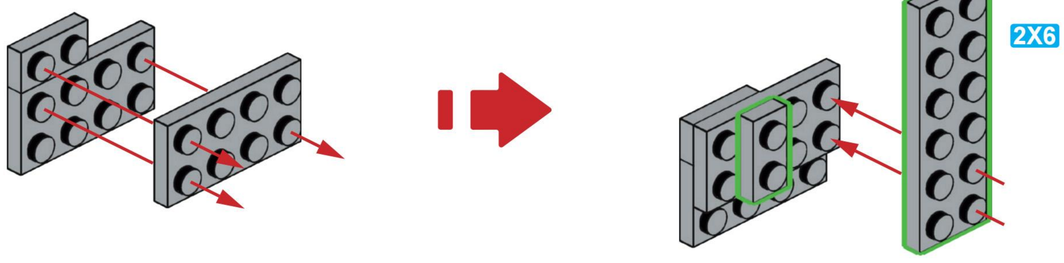

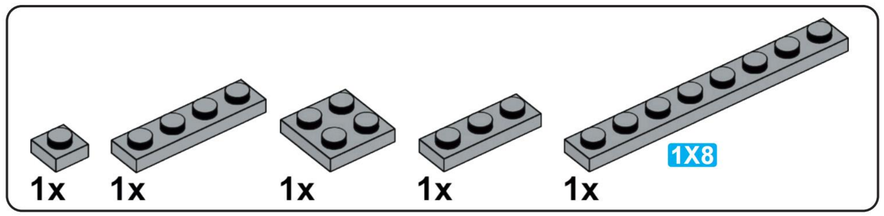

J61

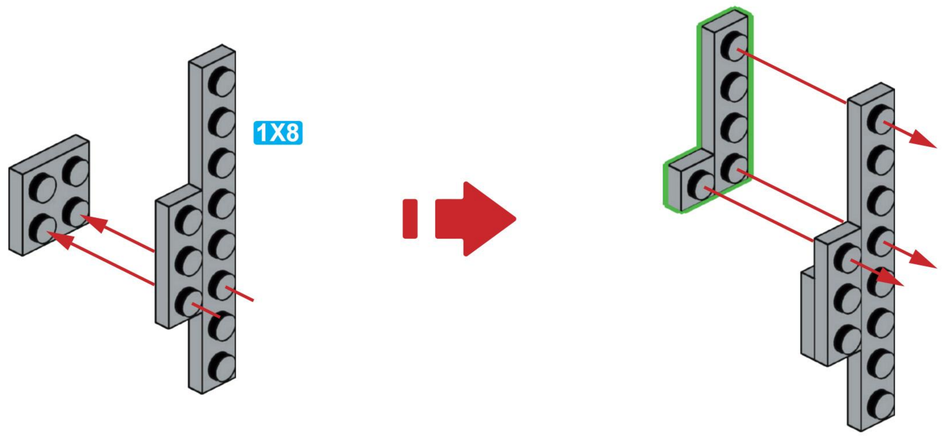

J62

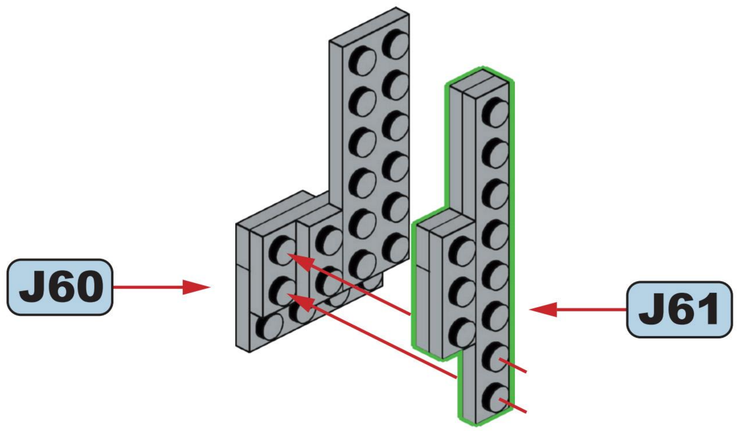

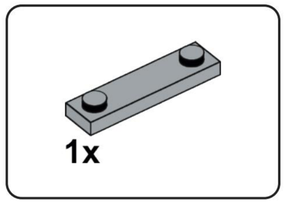

J63

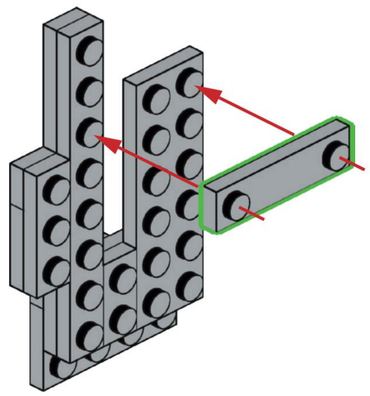

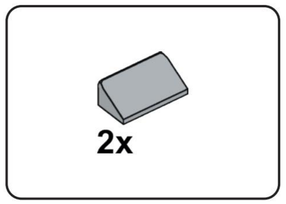

J64

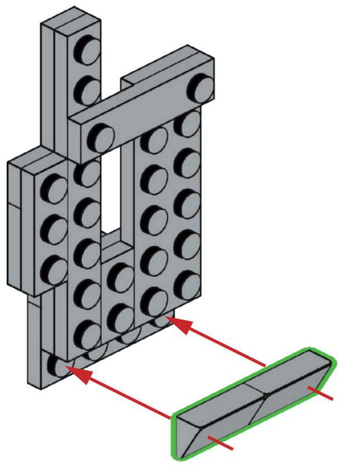

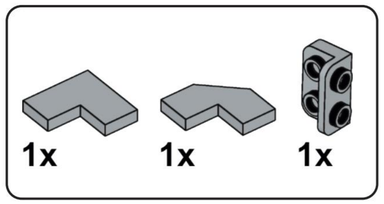

J65

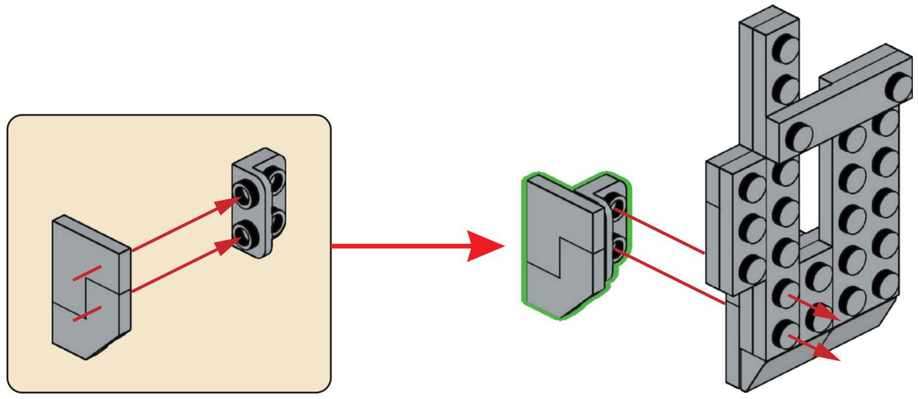

J66

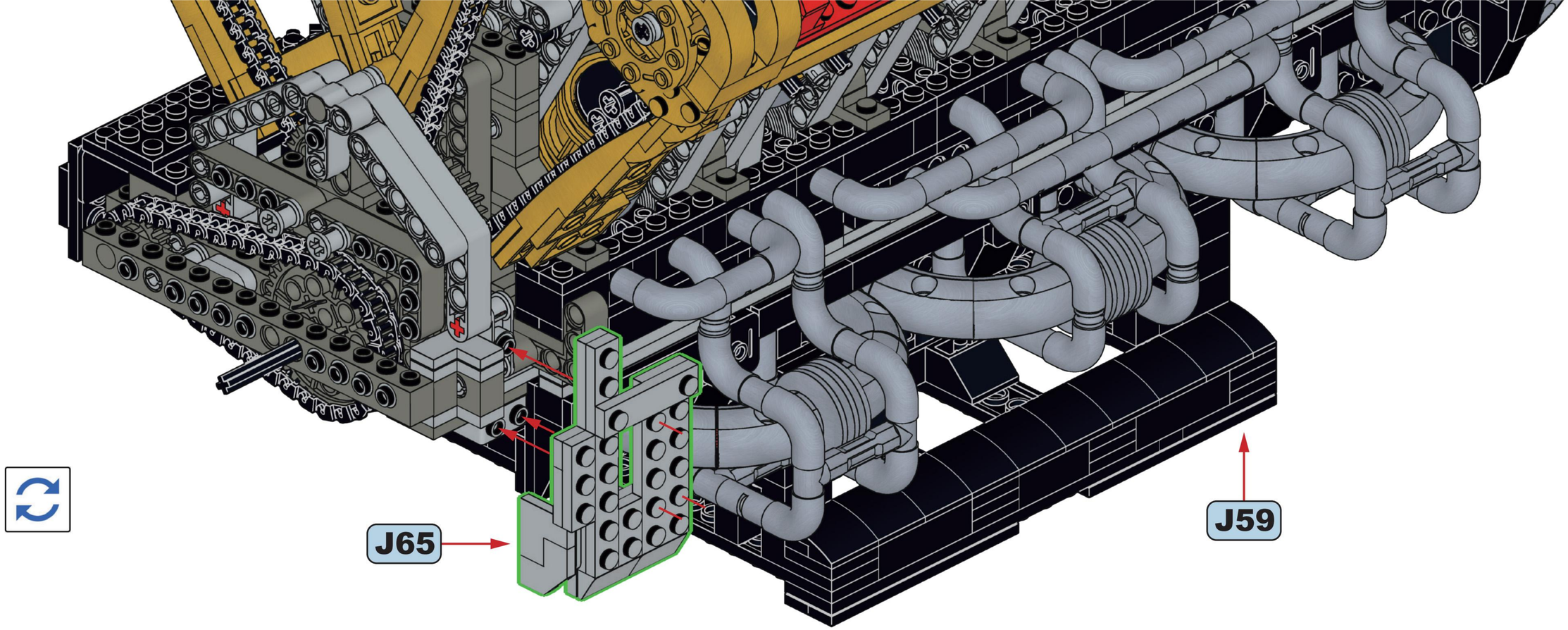
J65
J59

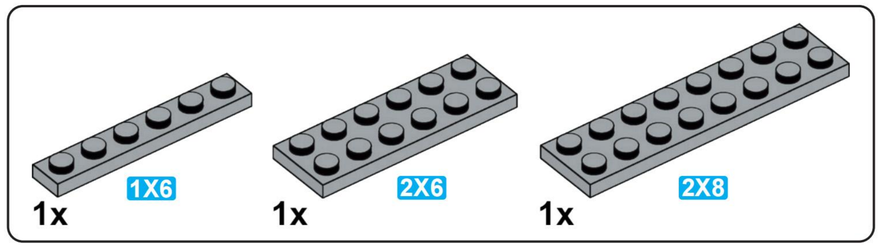
1x
1X6
1x
2X6
1x
2X8

J67

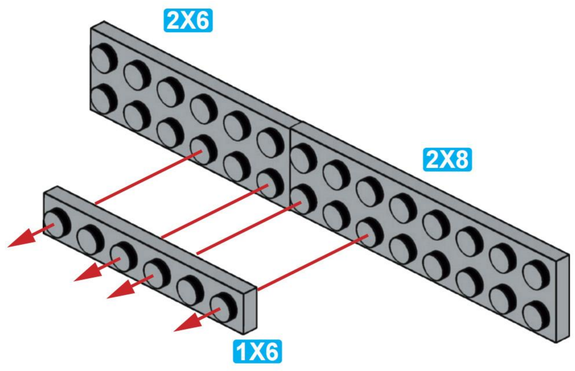
2X6
2X8
1X6

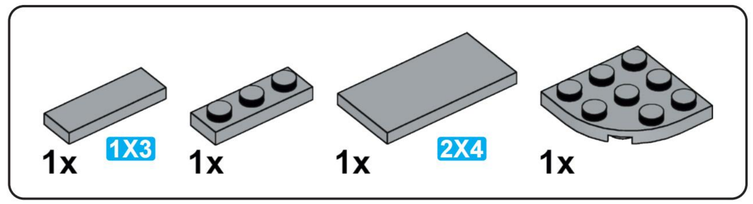
1x
1X3
1x
1x
2X4
1x

J68

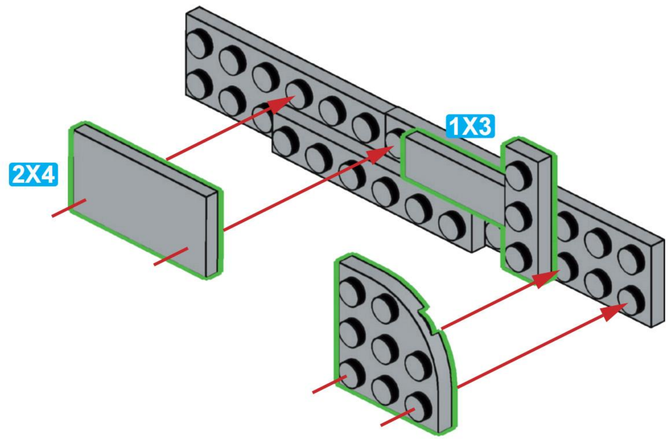
2X4
1X3

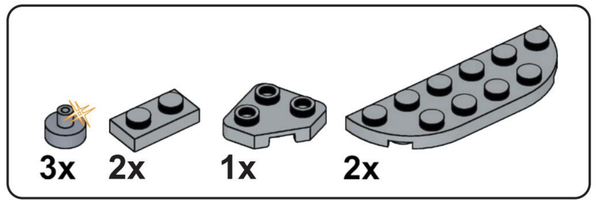

J69

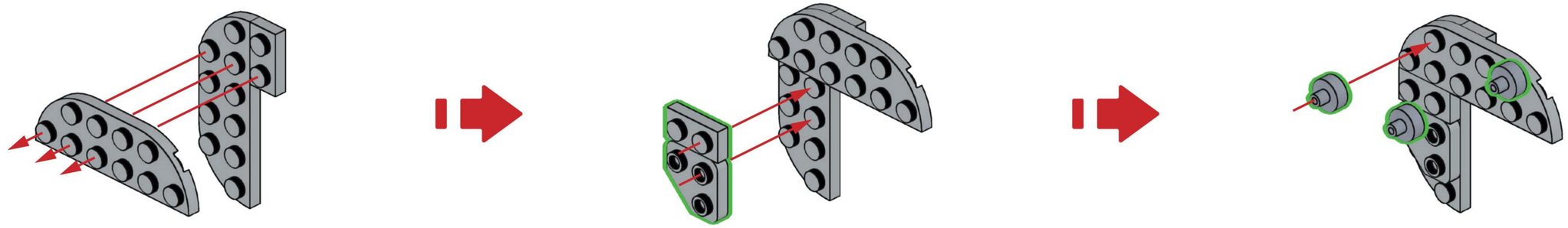

J70

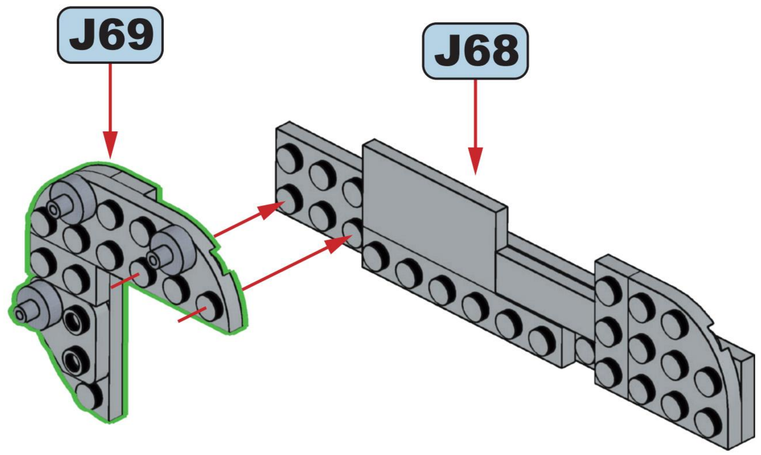

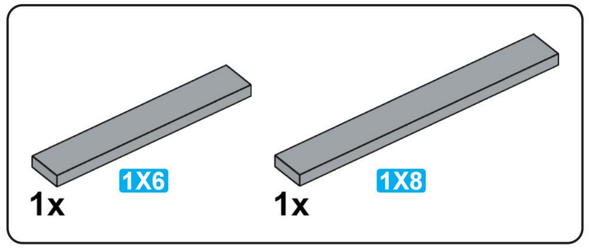

J71

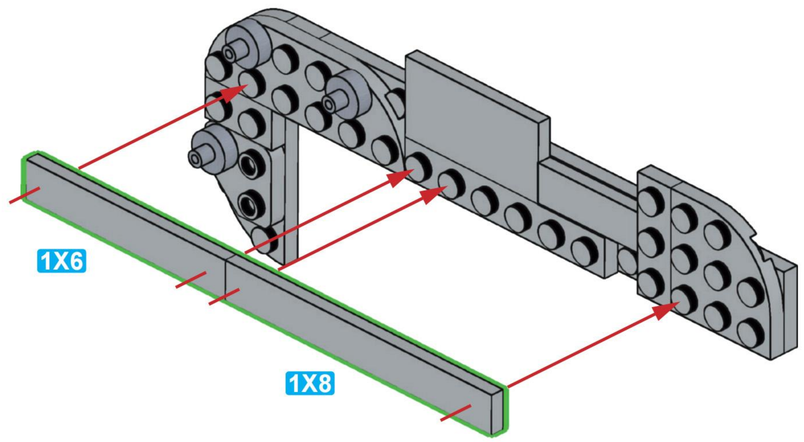

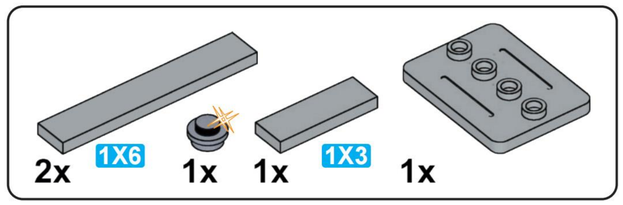

J72

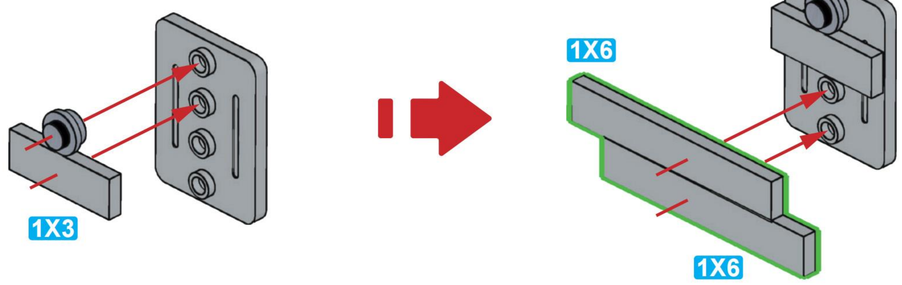

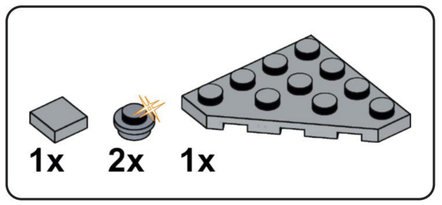

J73

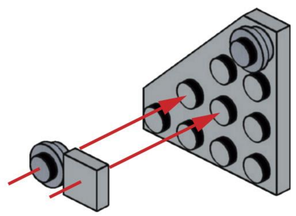

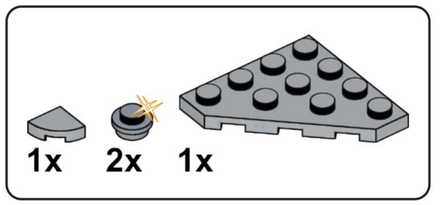

J74

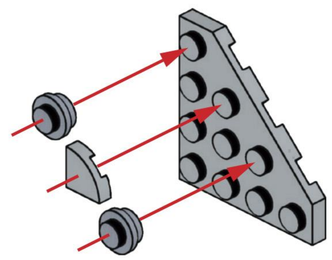

J75

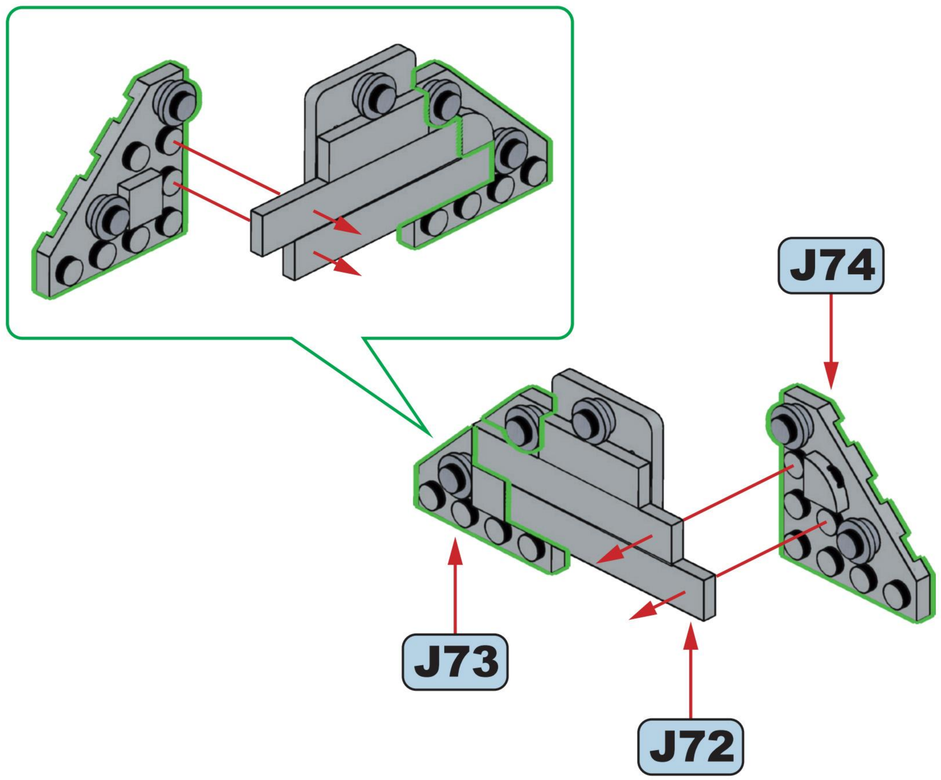

J76

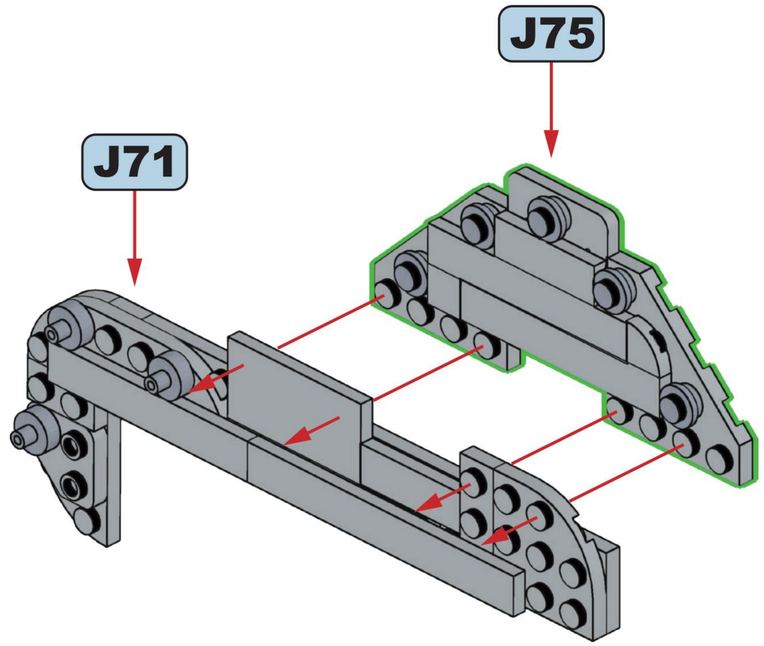

J77

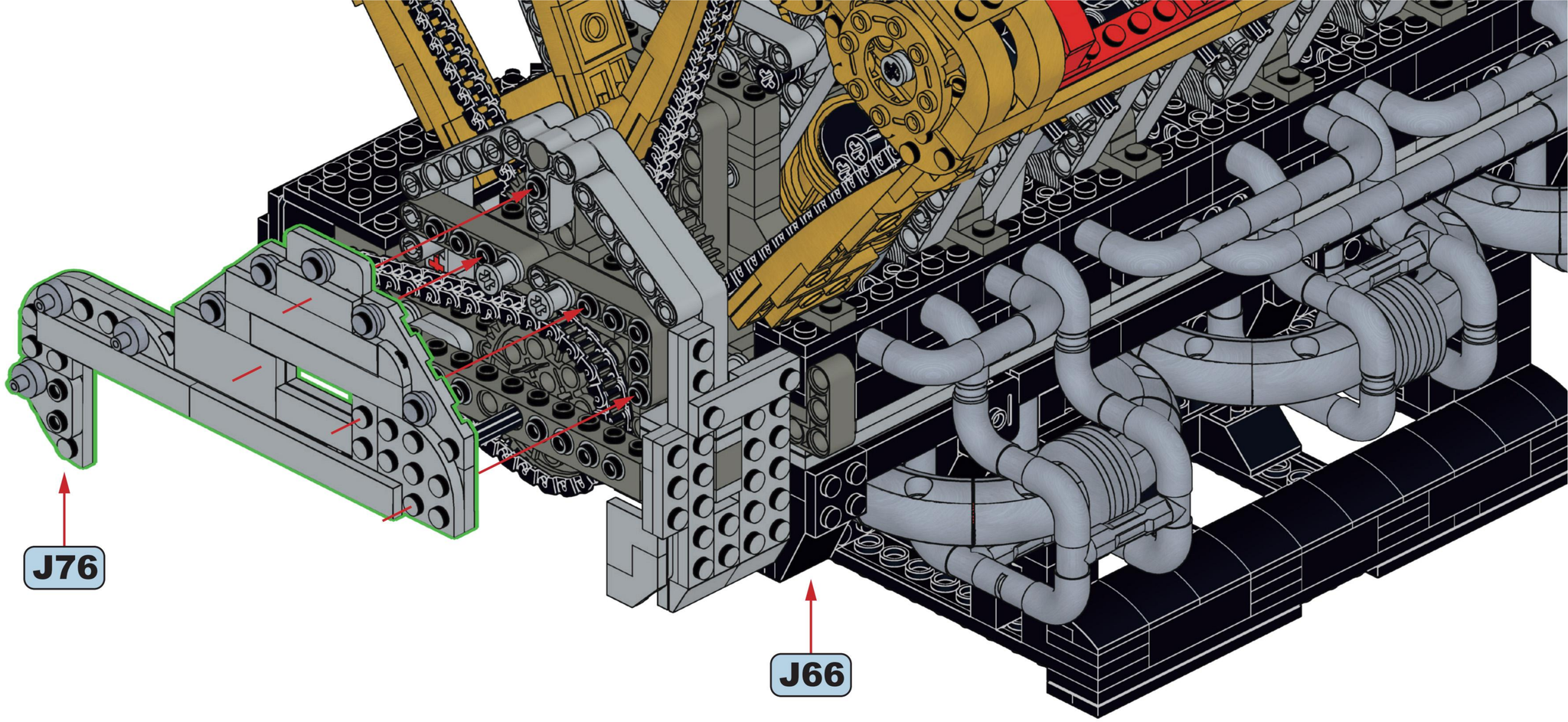

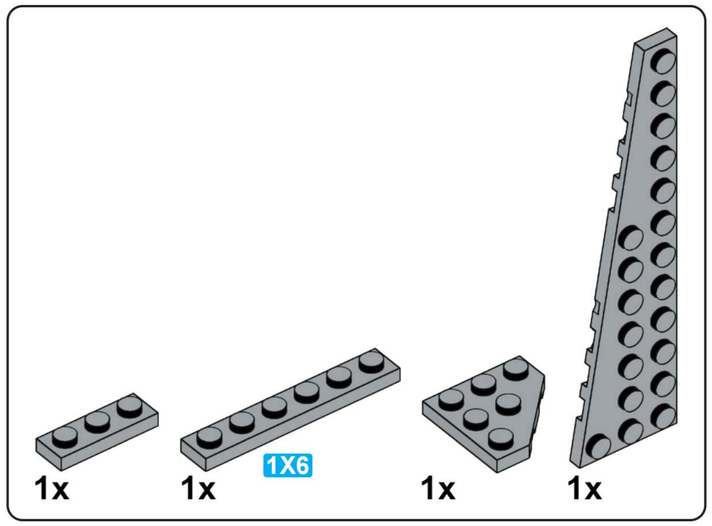

J78

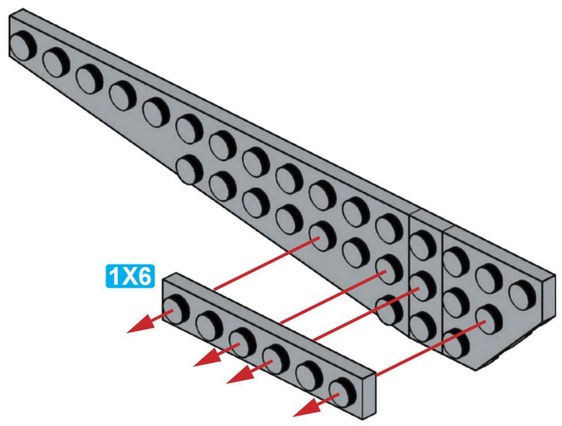

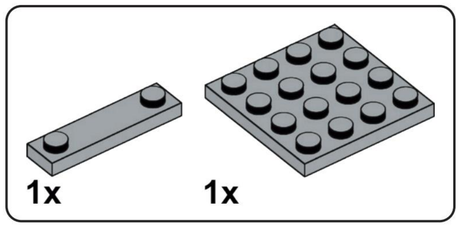

J79

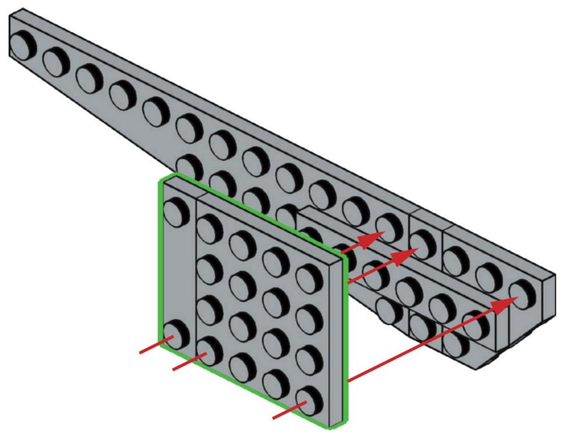

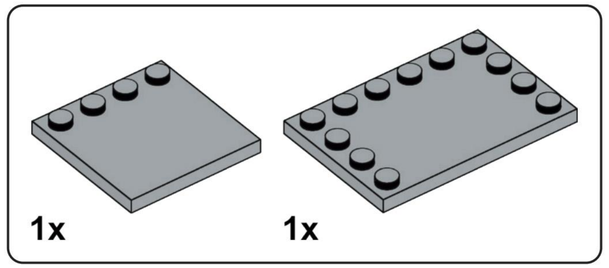

J80

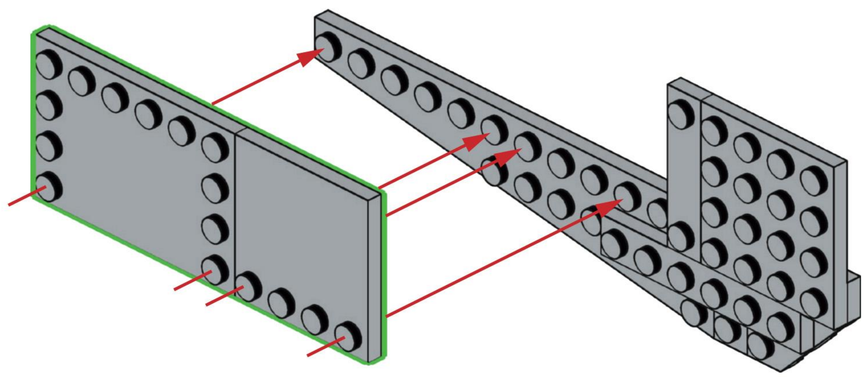

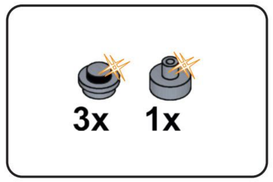

J81

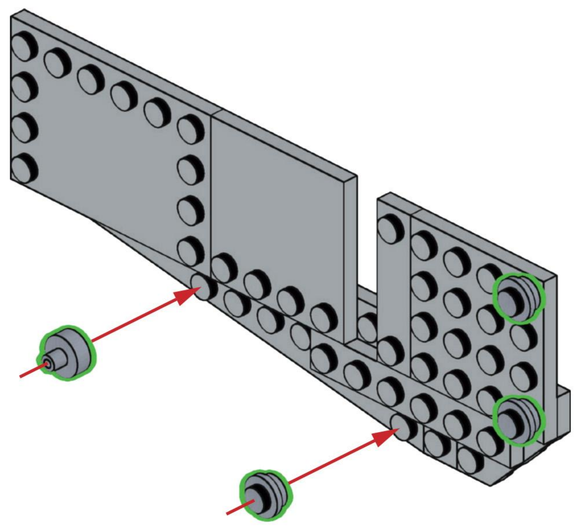

J82

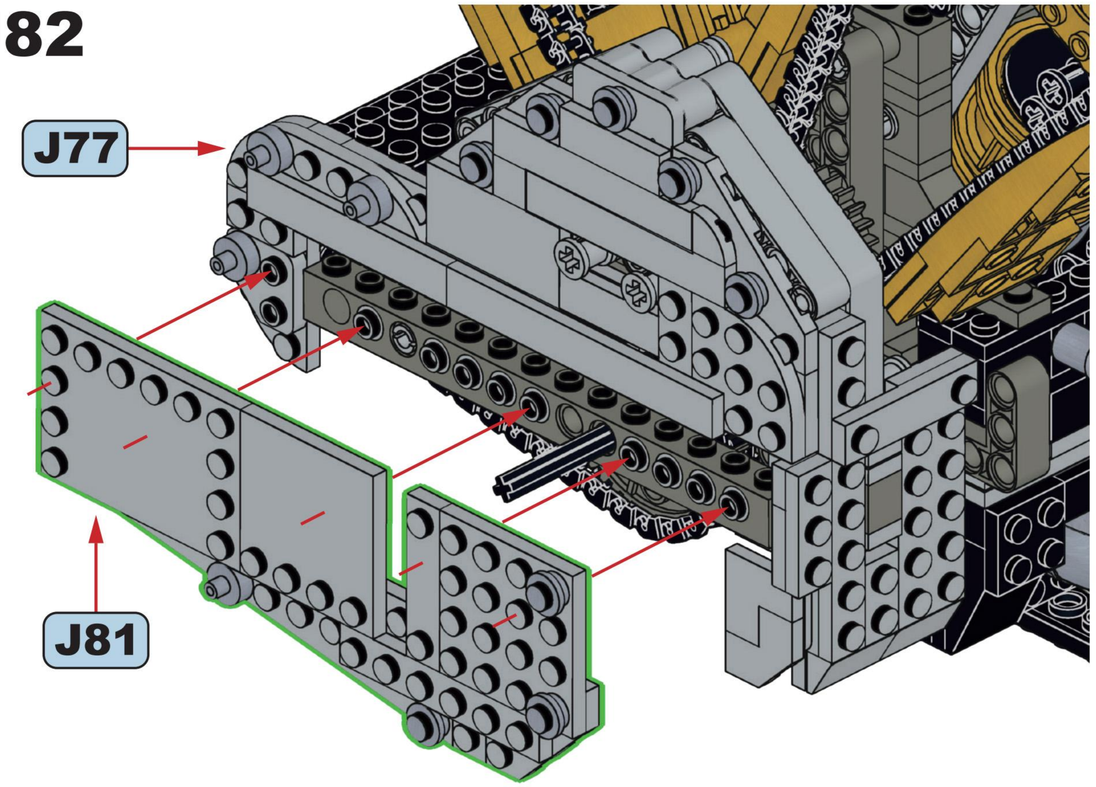

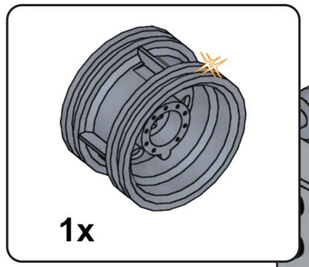

J83

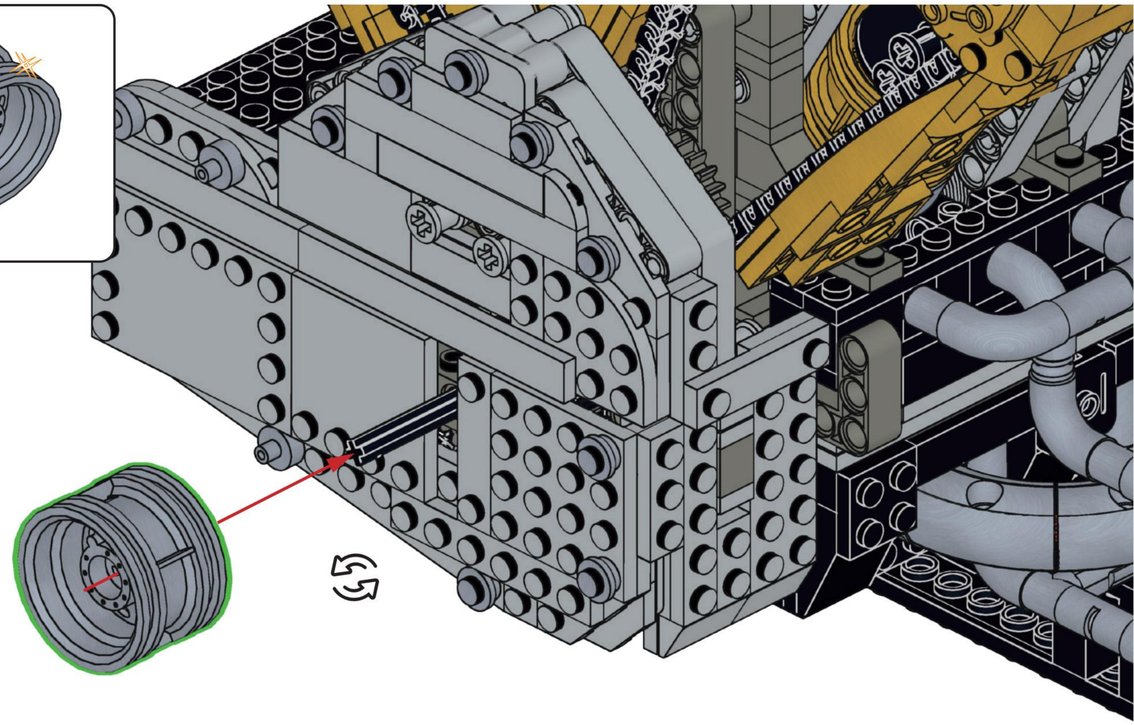

11

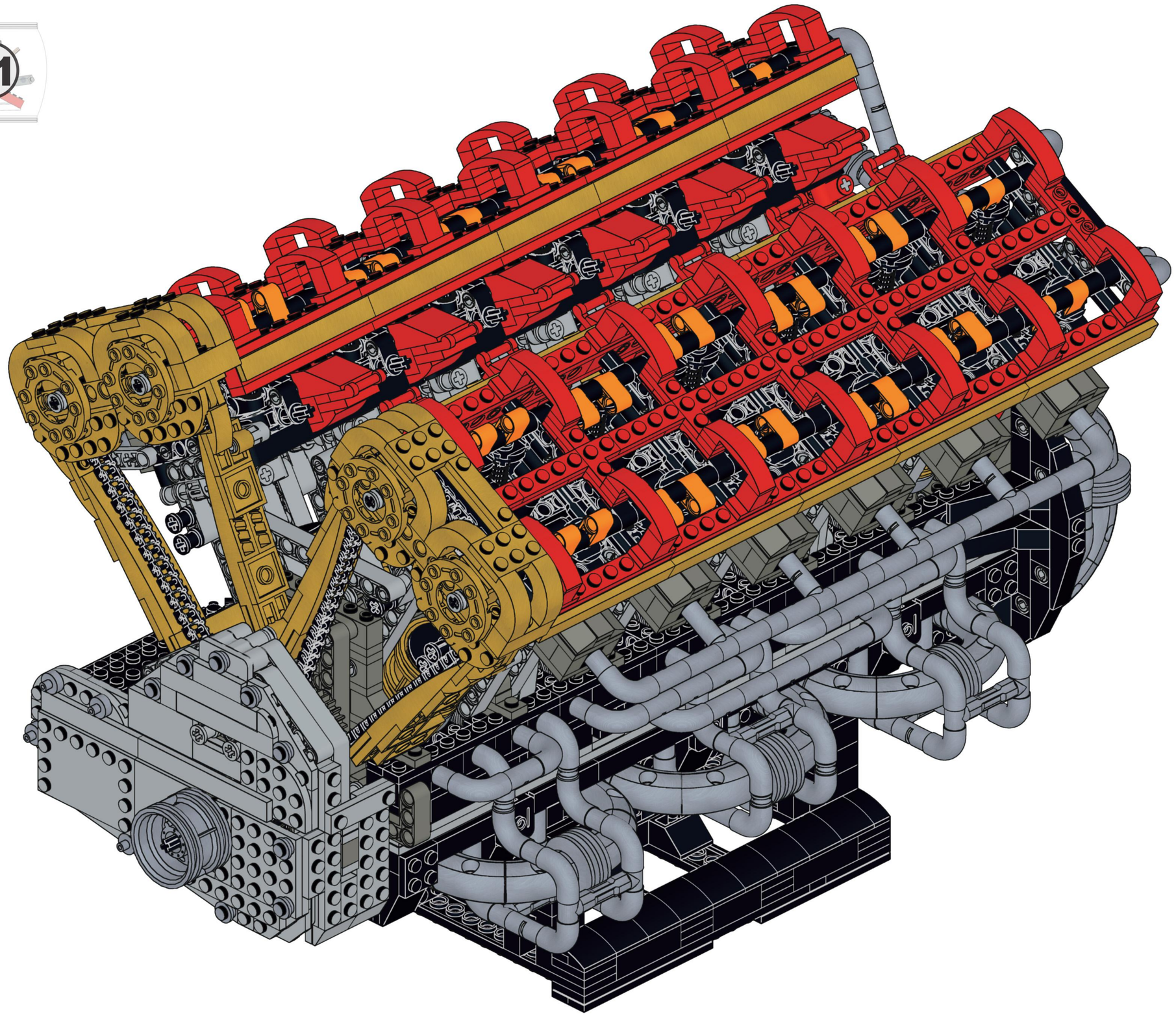

K

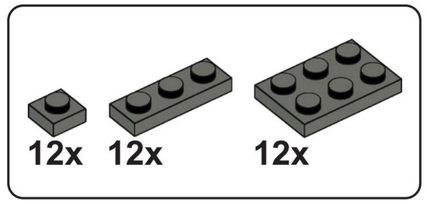

K1

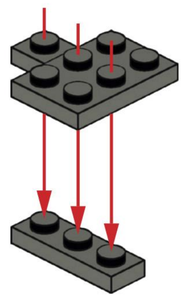

x12

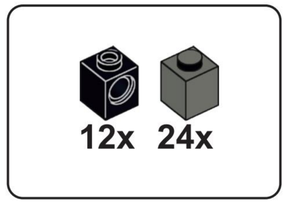

K2

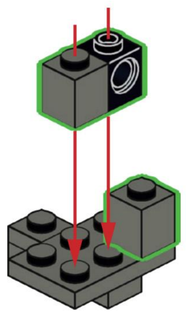

x12

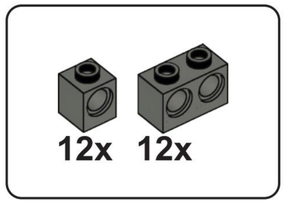

K3

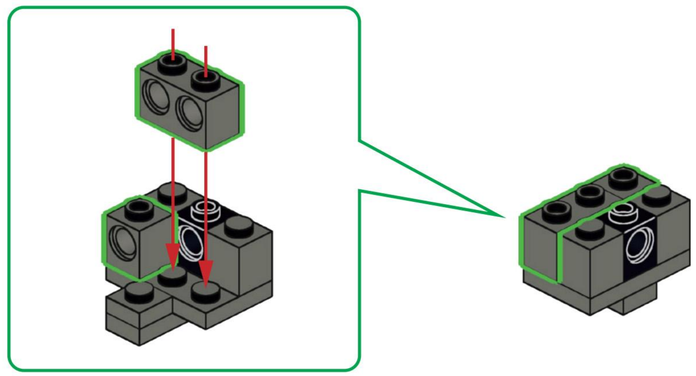

x12

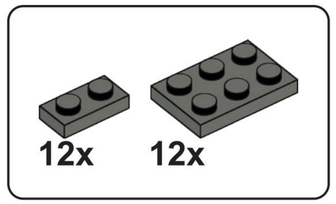

K4

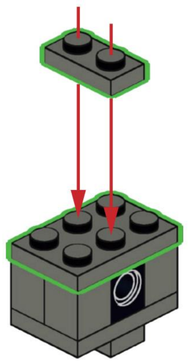

x12

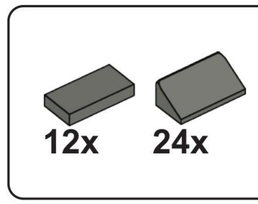

K5

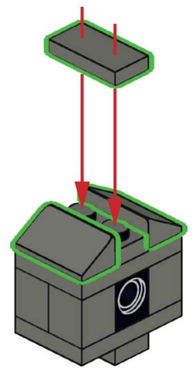

x12

K6

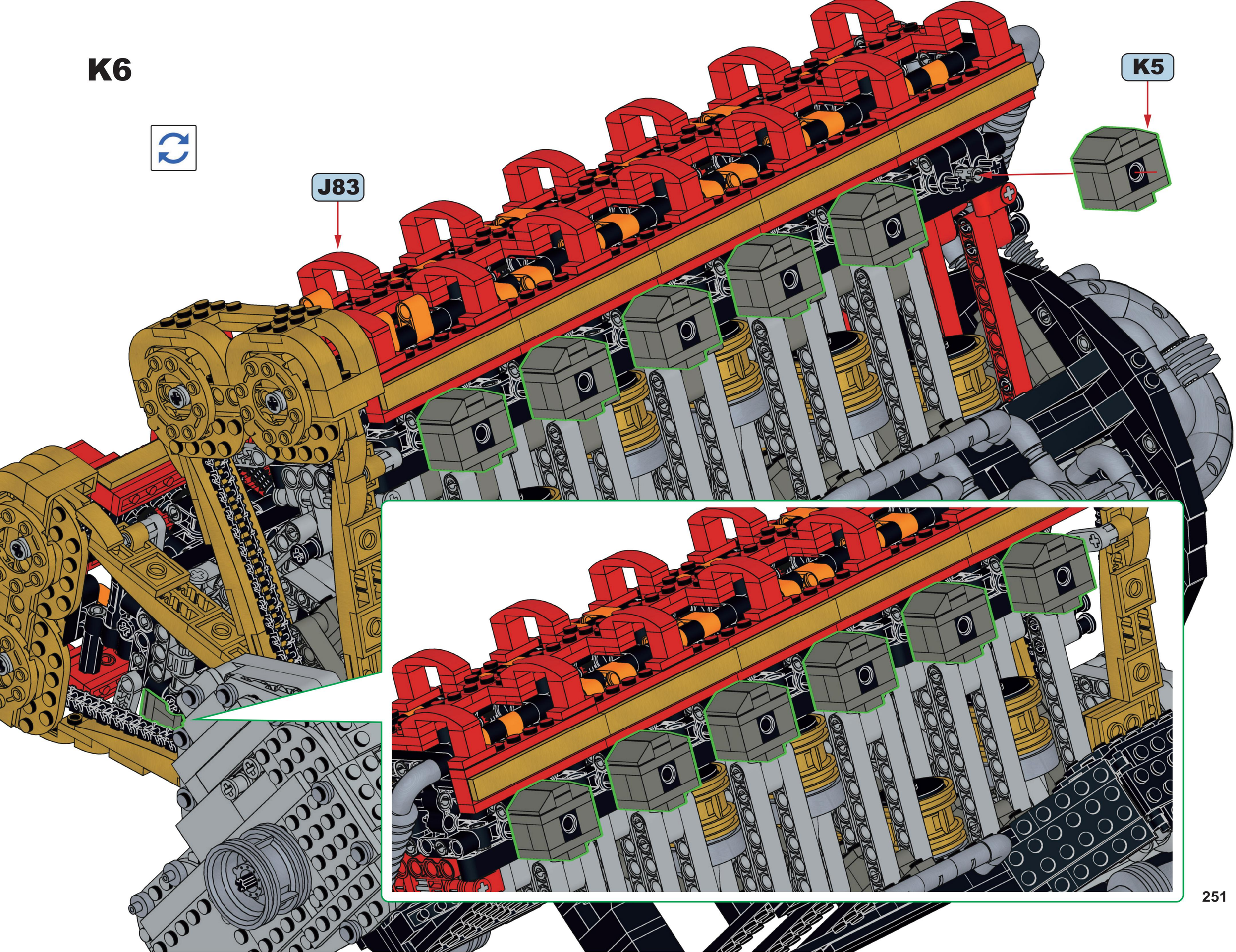

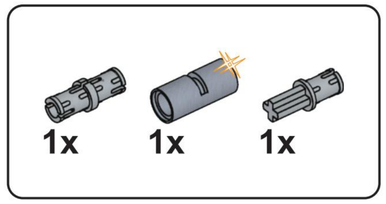

K7

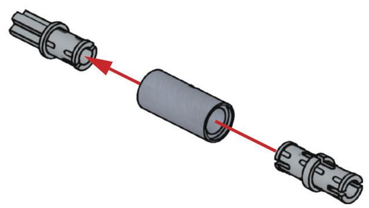

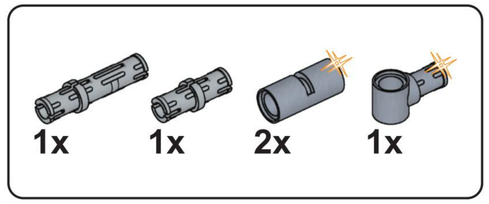

K8

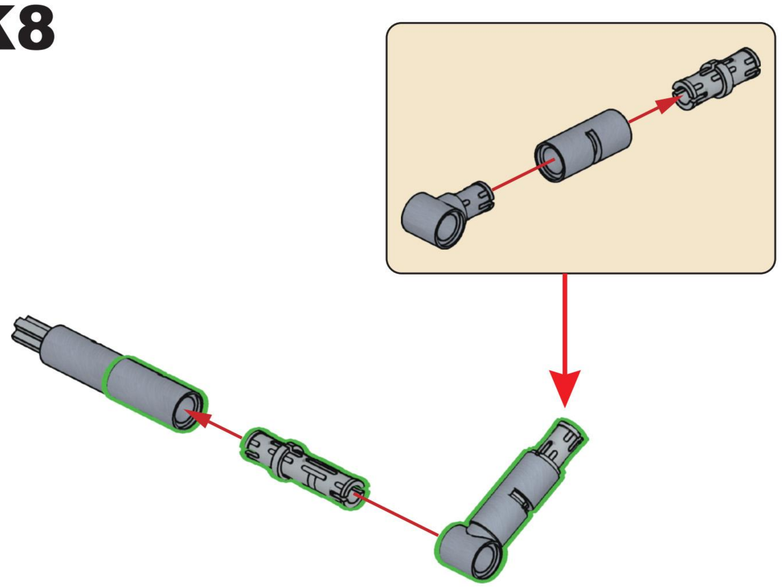

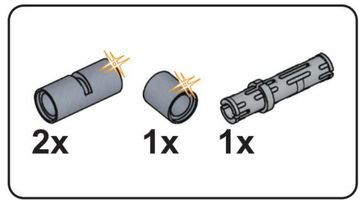

K9

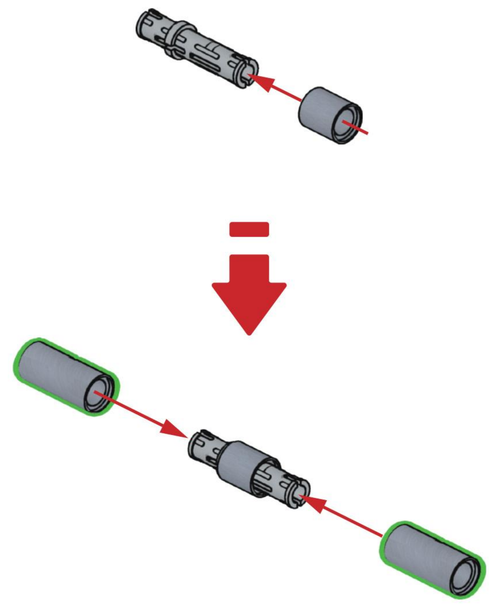

K10

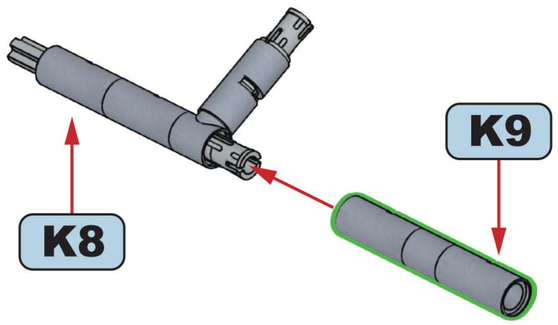

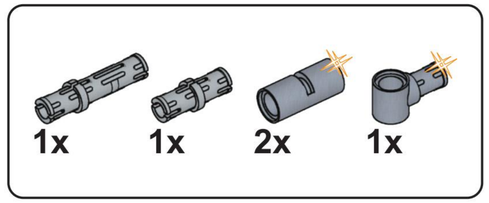

K11

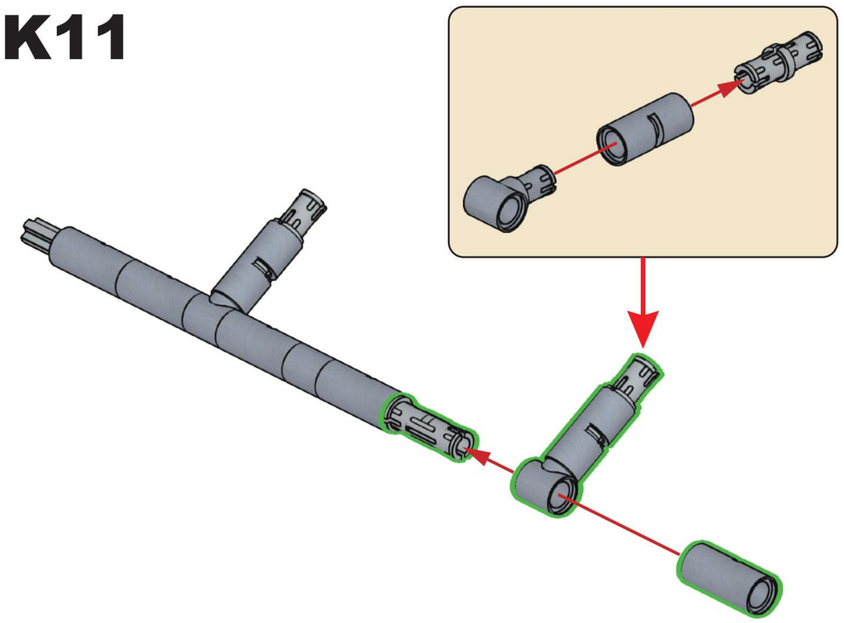

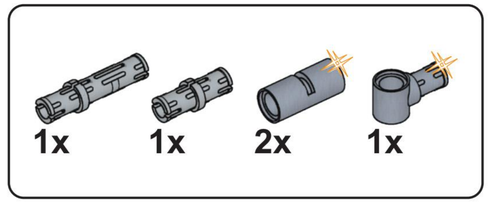

K12

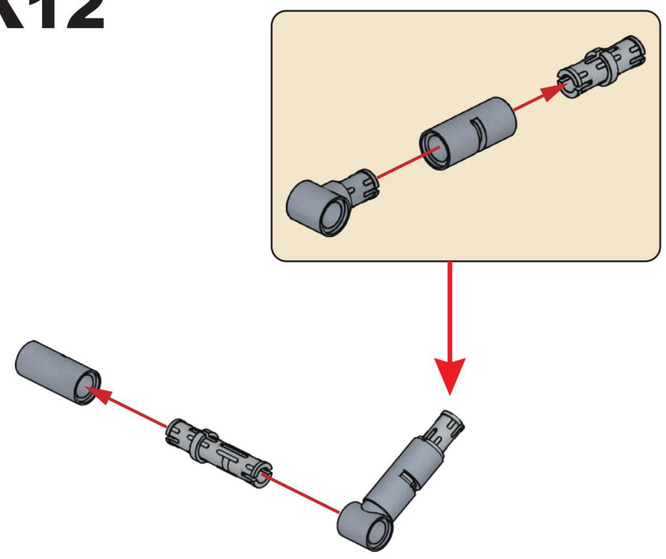

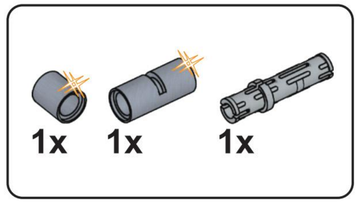

K13

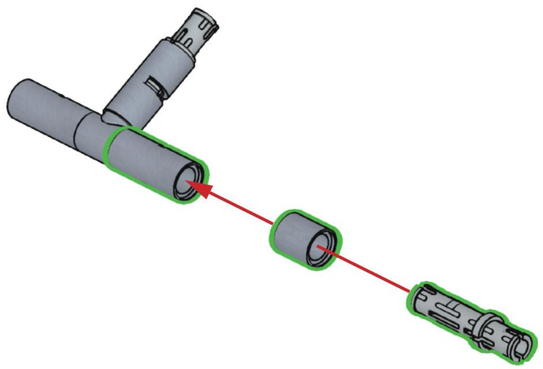

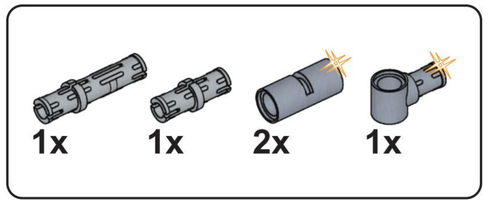

K14

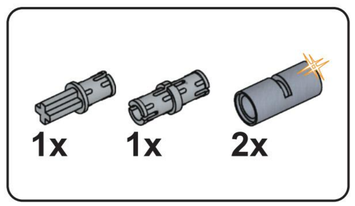

K15

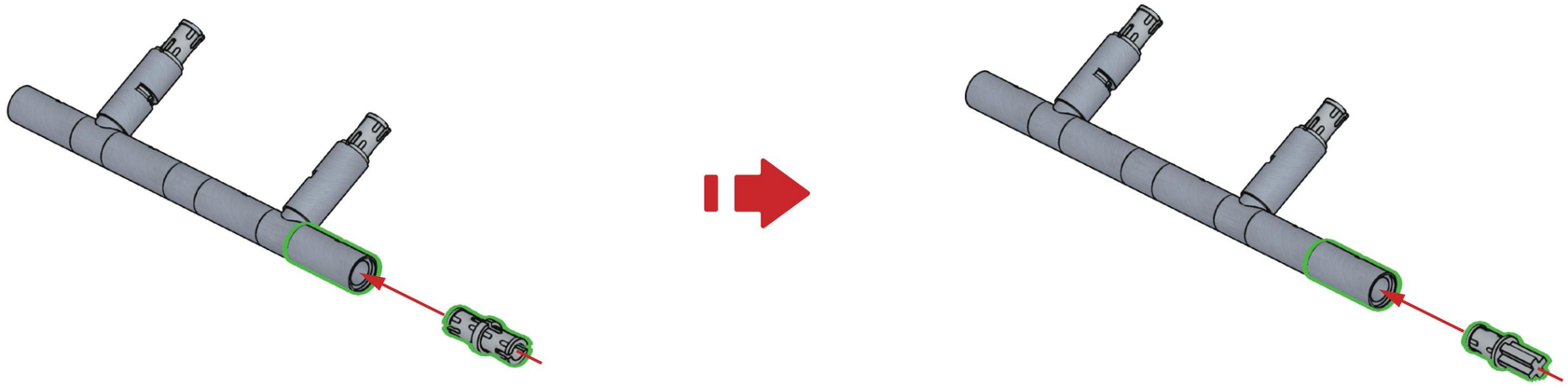

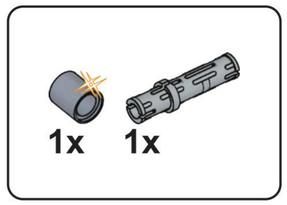

K16

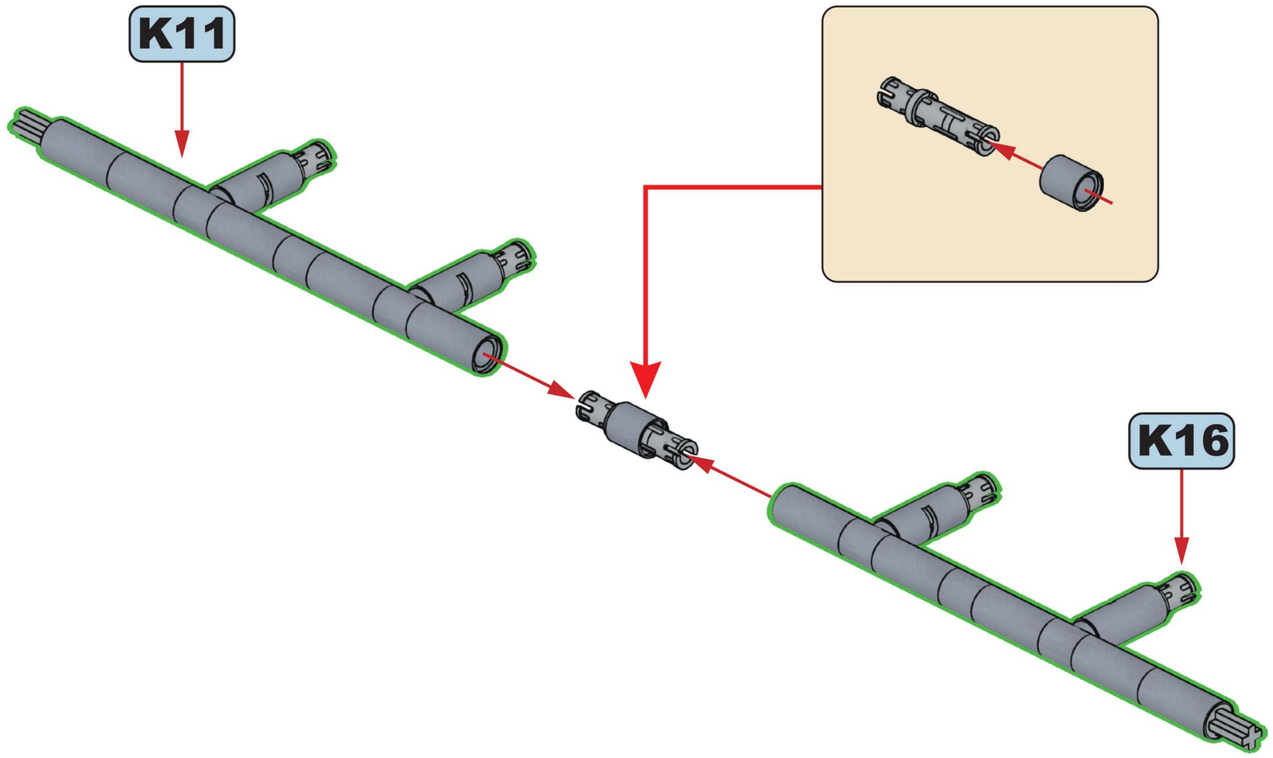

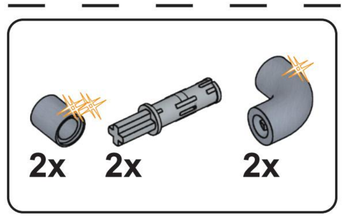

K17

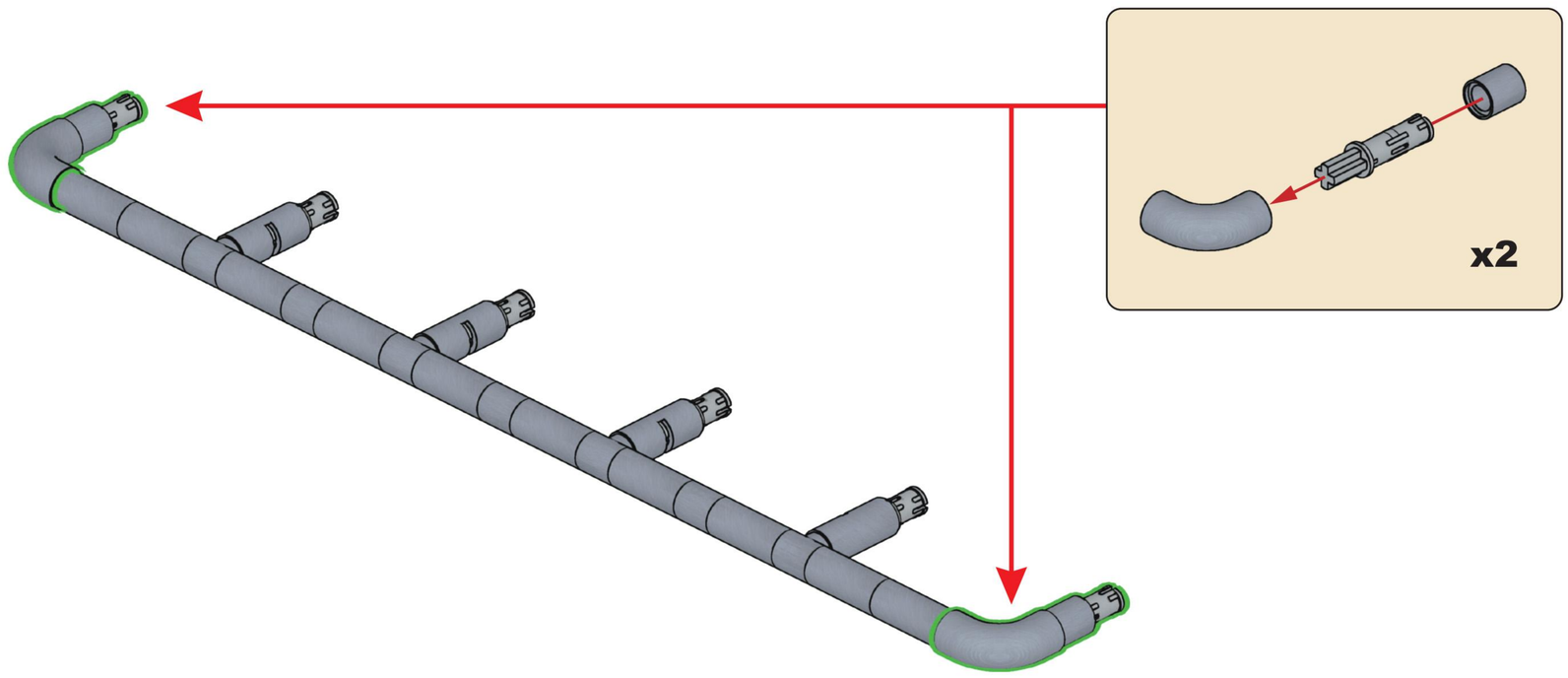

K18

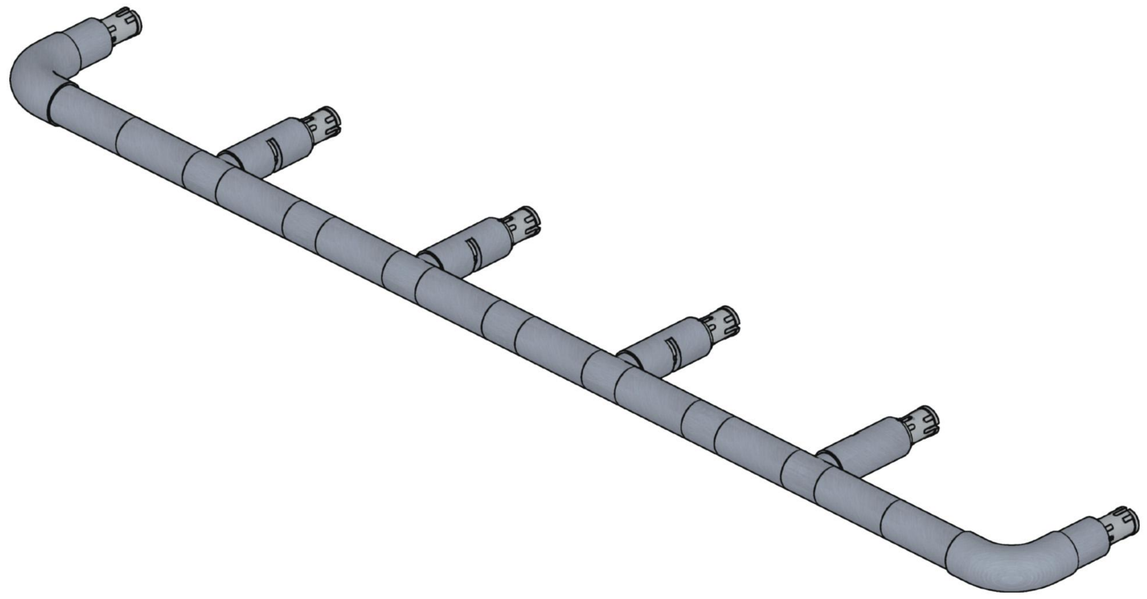

x2

K19

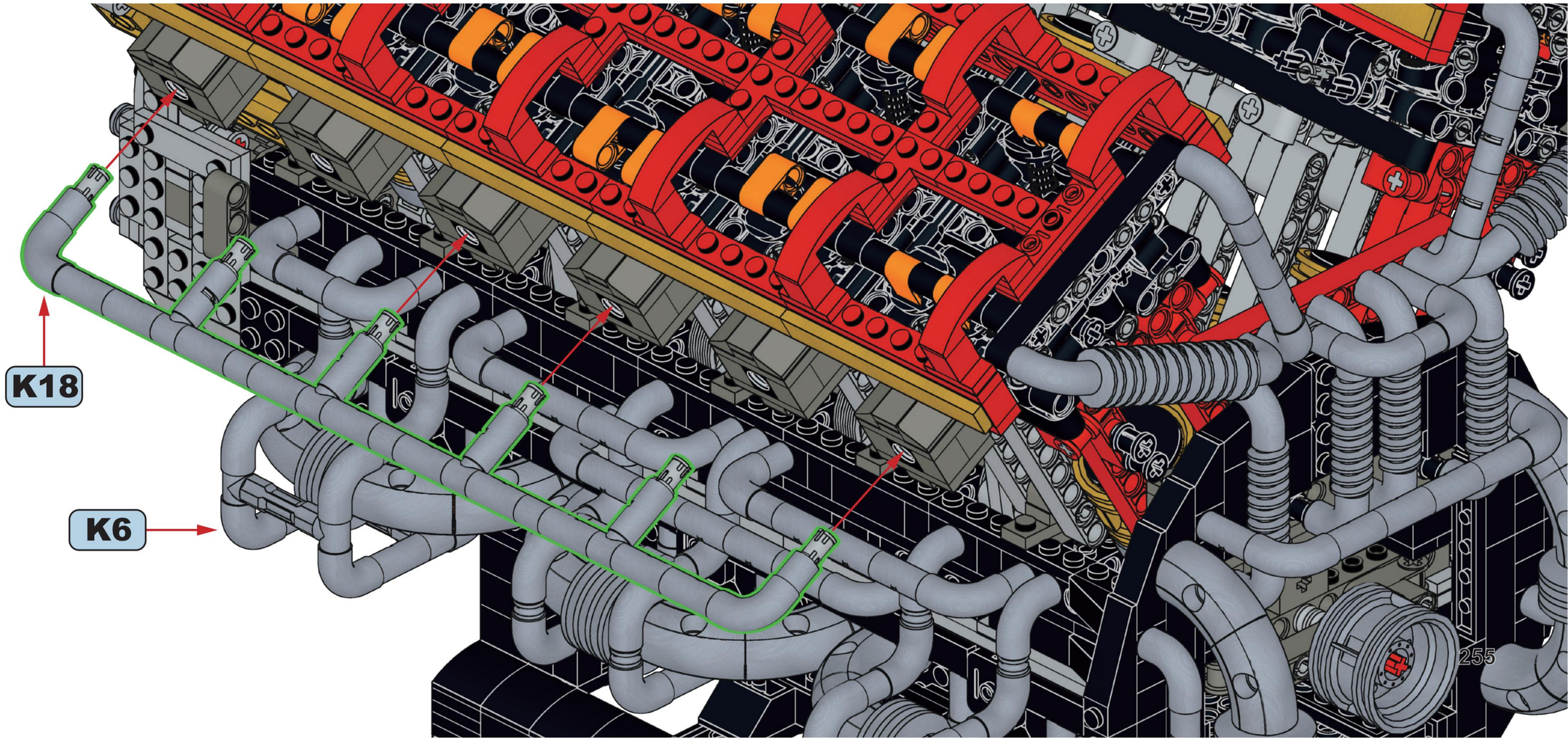

K20

K18

K19

1x 1x 1x 1x

K21

1x 1x

K22

K23

x12

K24

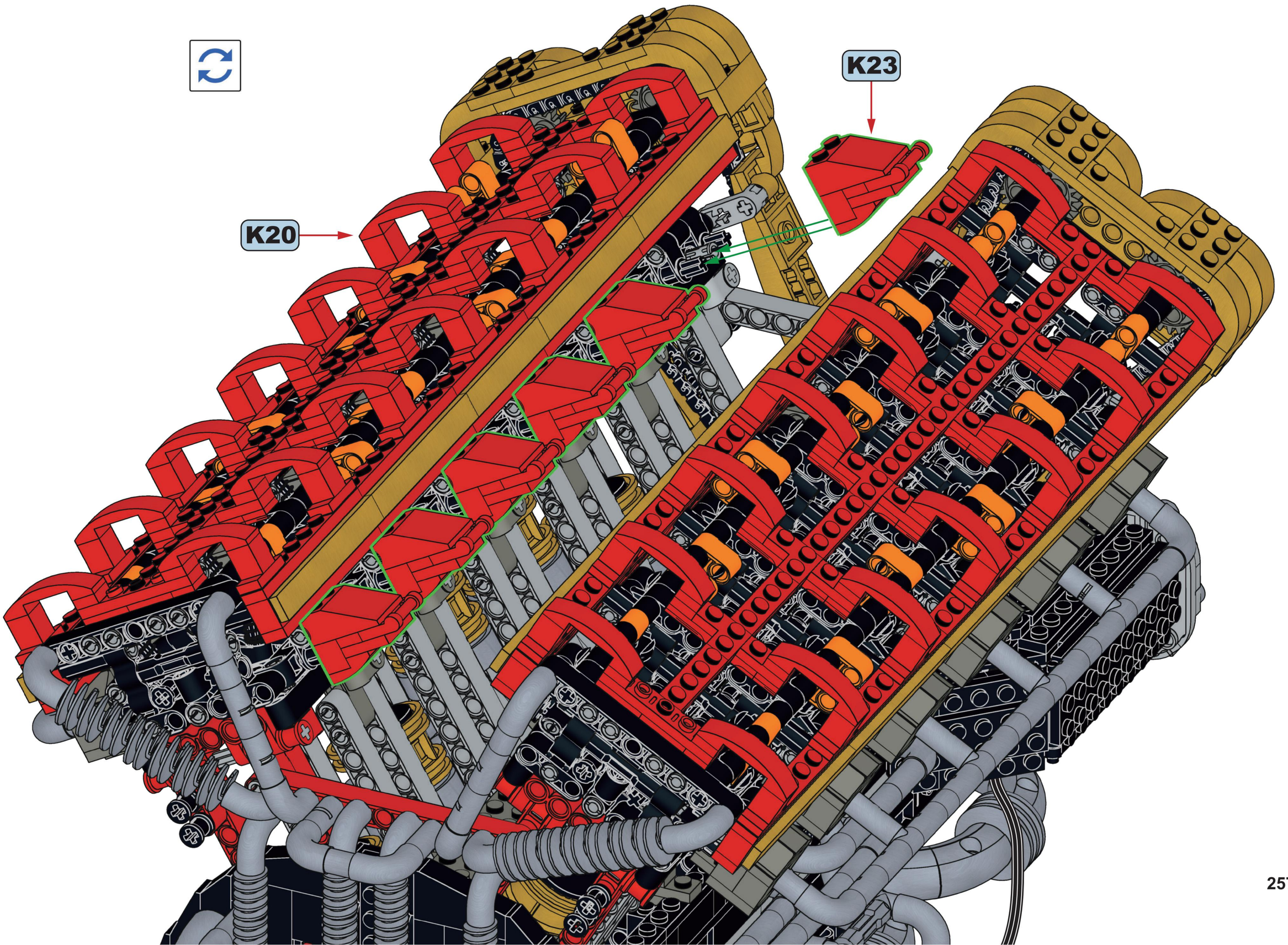

K25

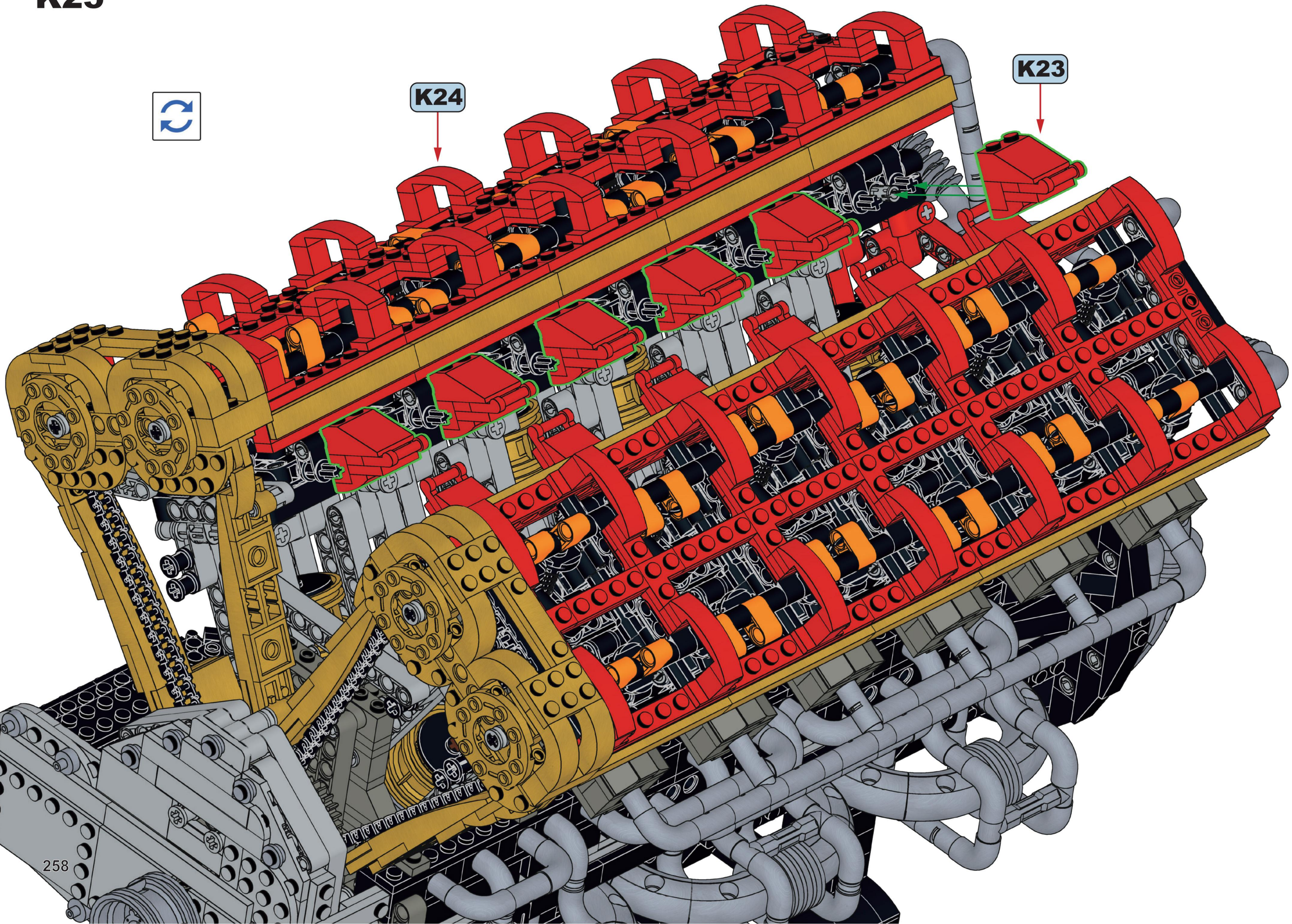

12

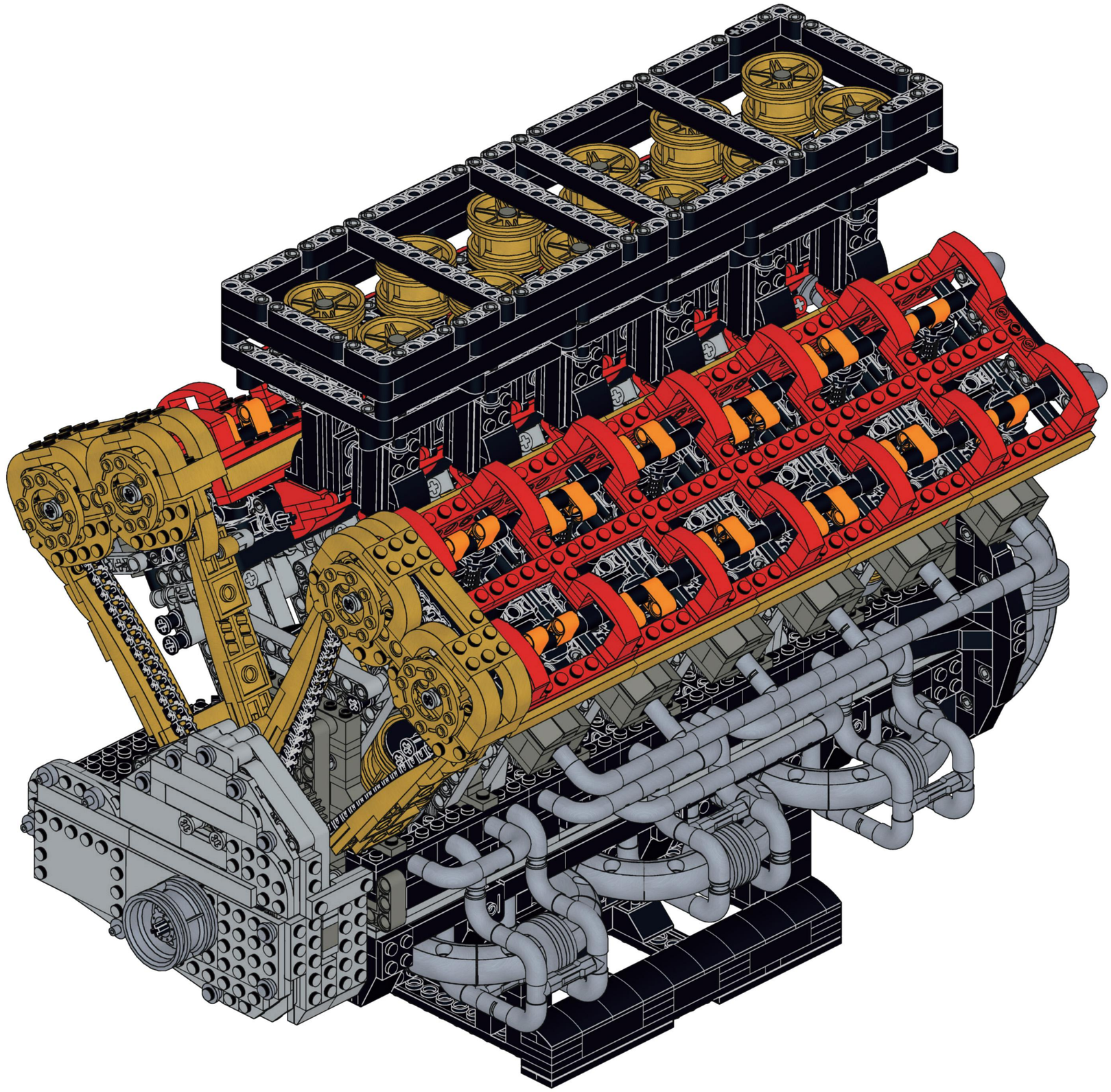

L

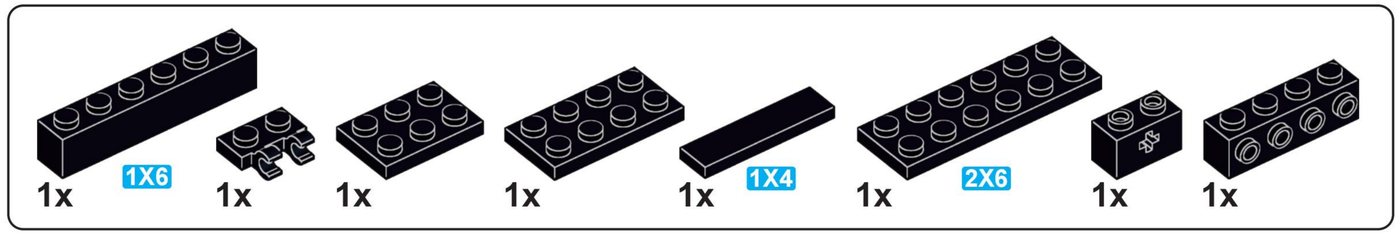

L1

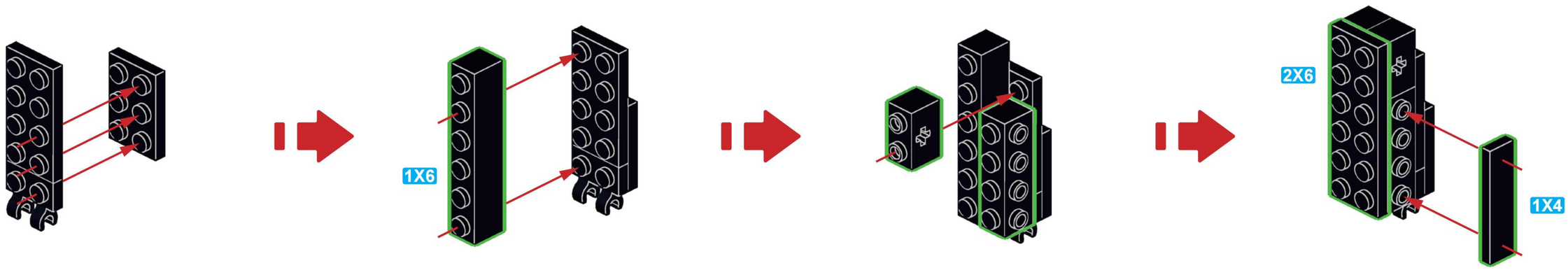

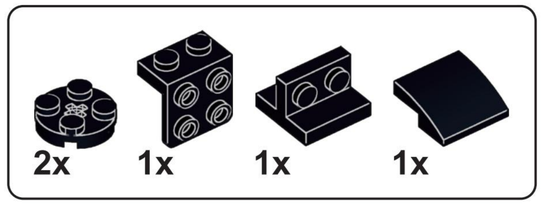

L2

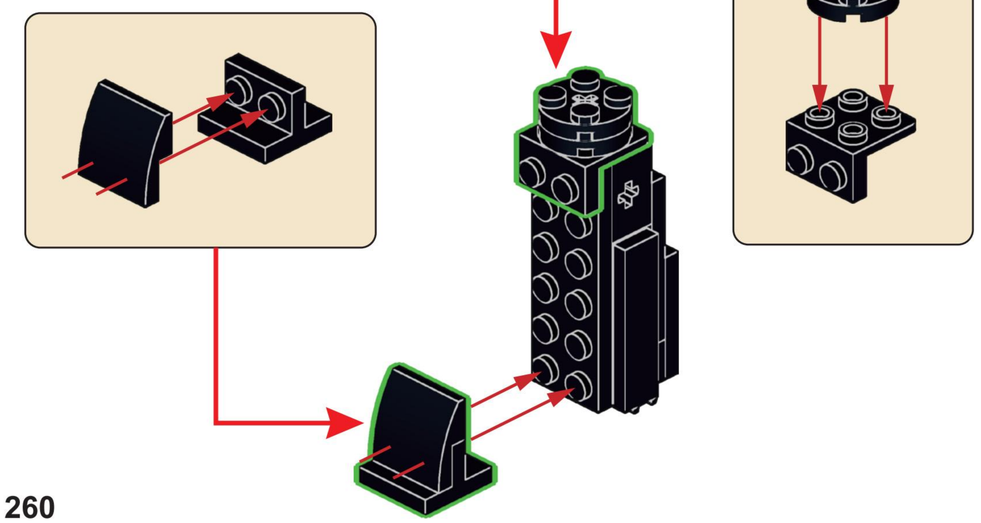

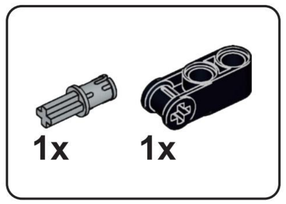

L3

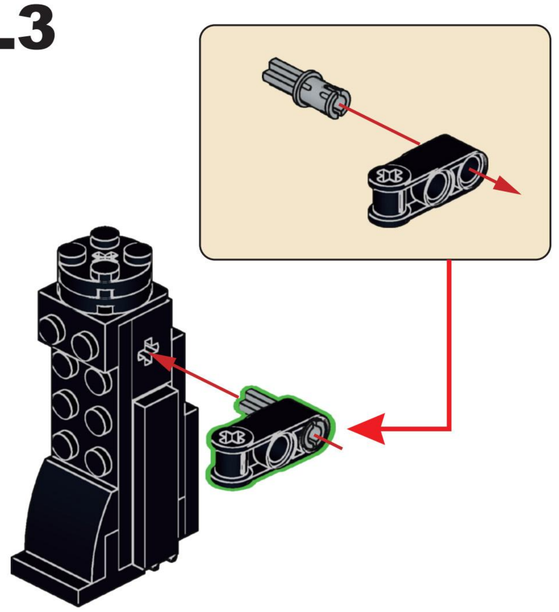

L4

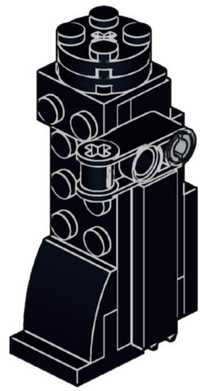

x6

L5

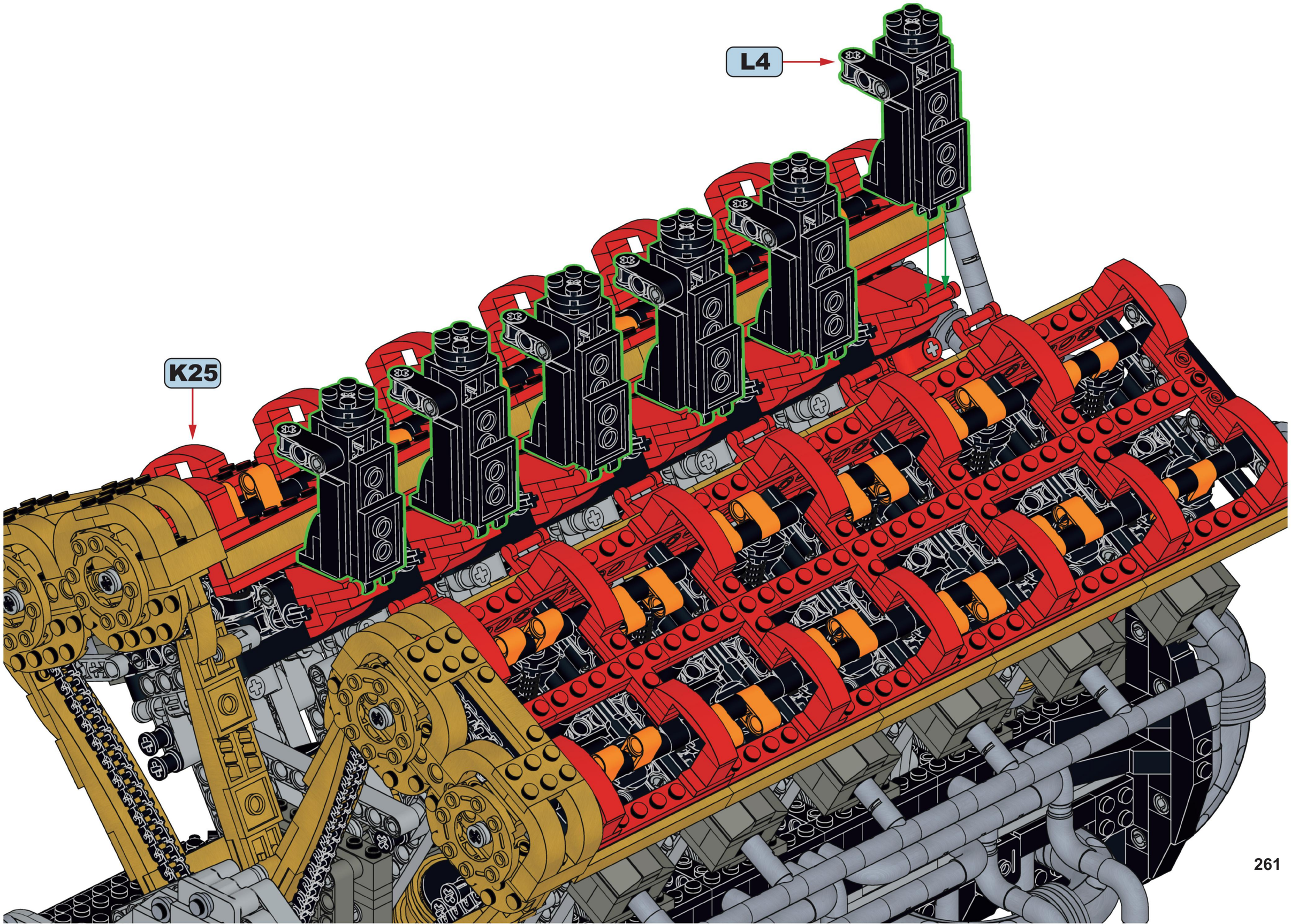

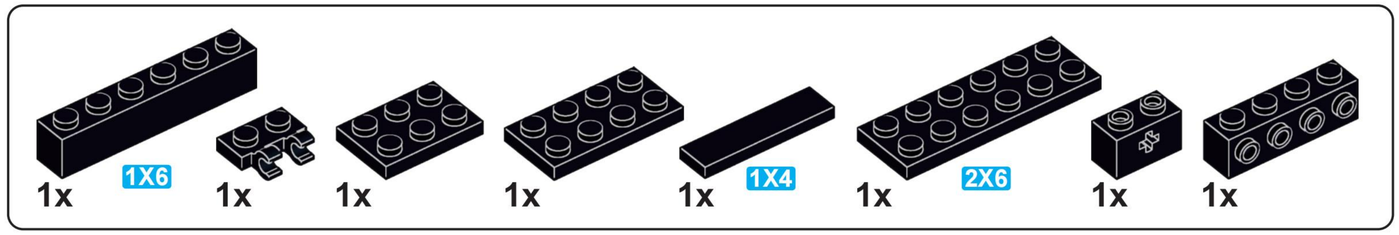

L6



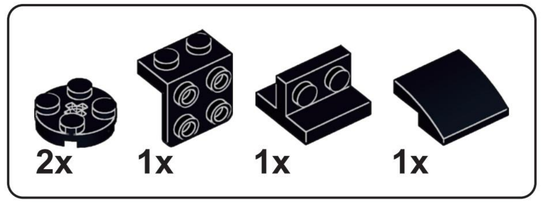

L7

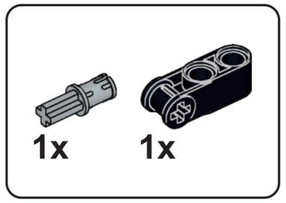

L8

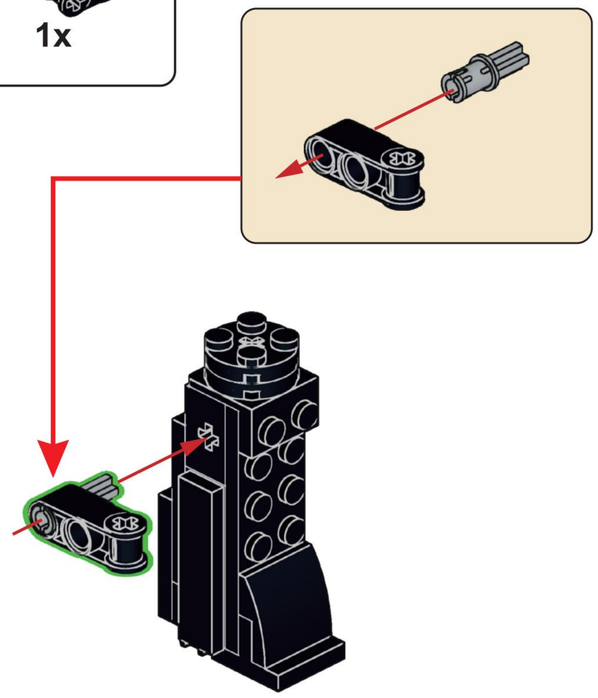

L9

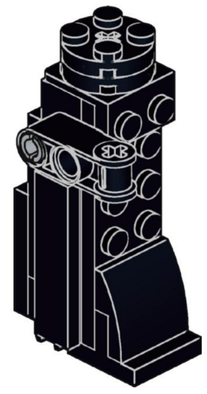

x6

L10

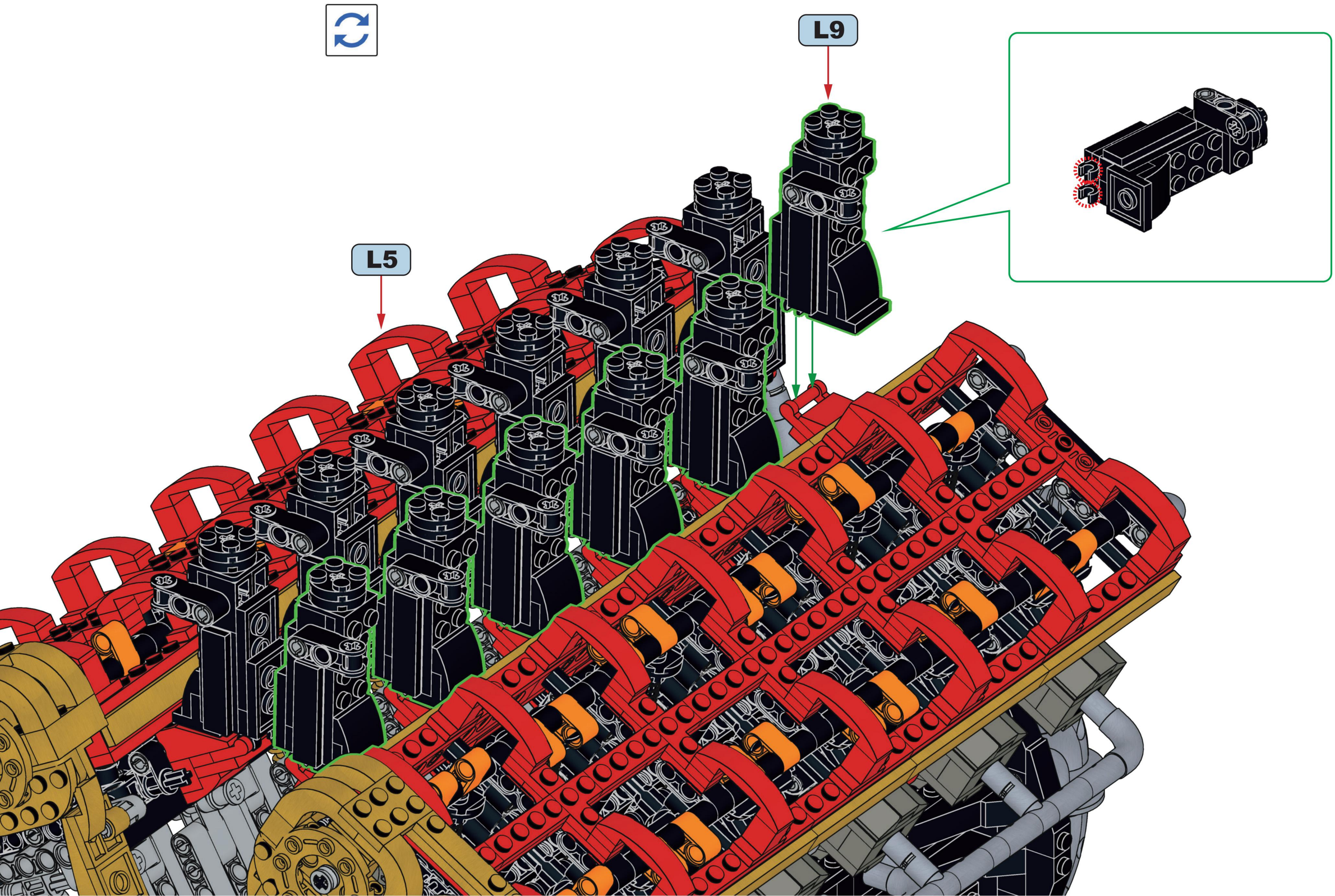

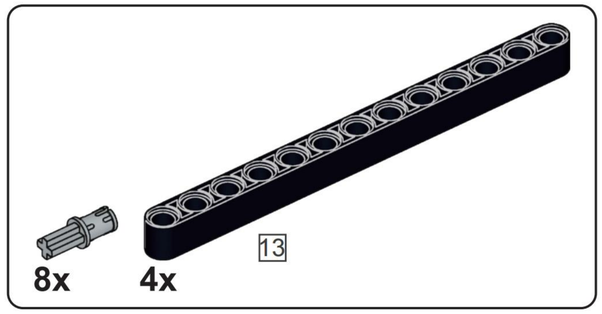

L11

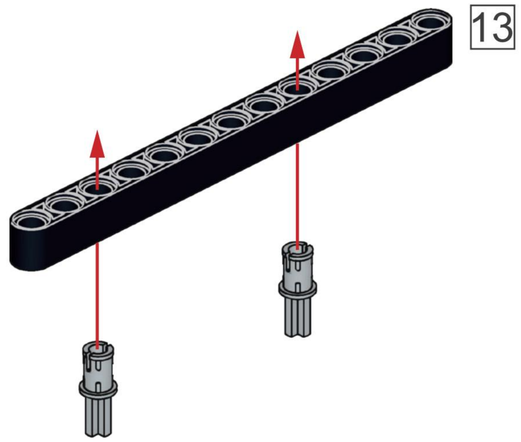

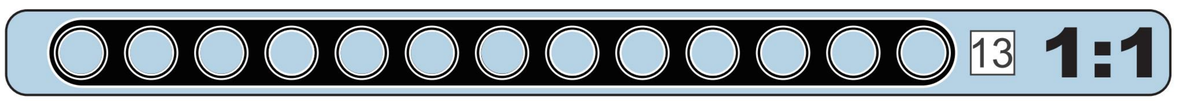

x4

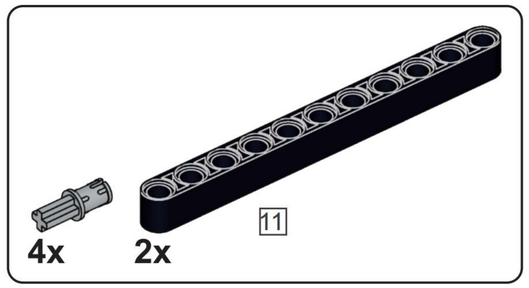

L12

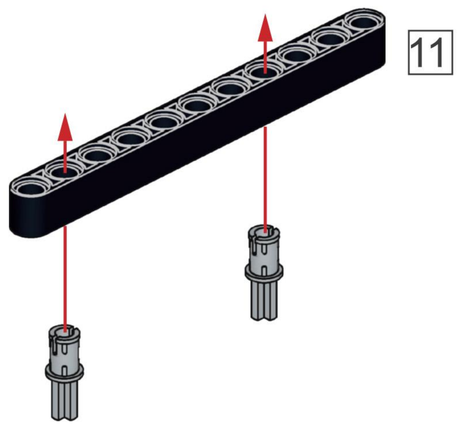

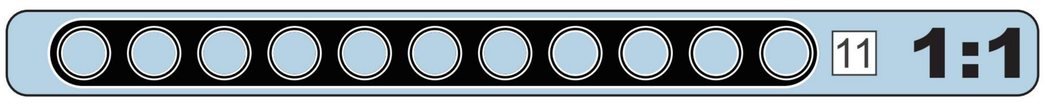

x2

L13

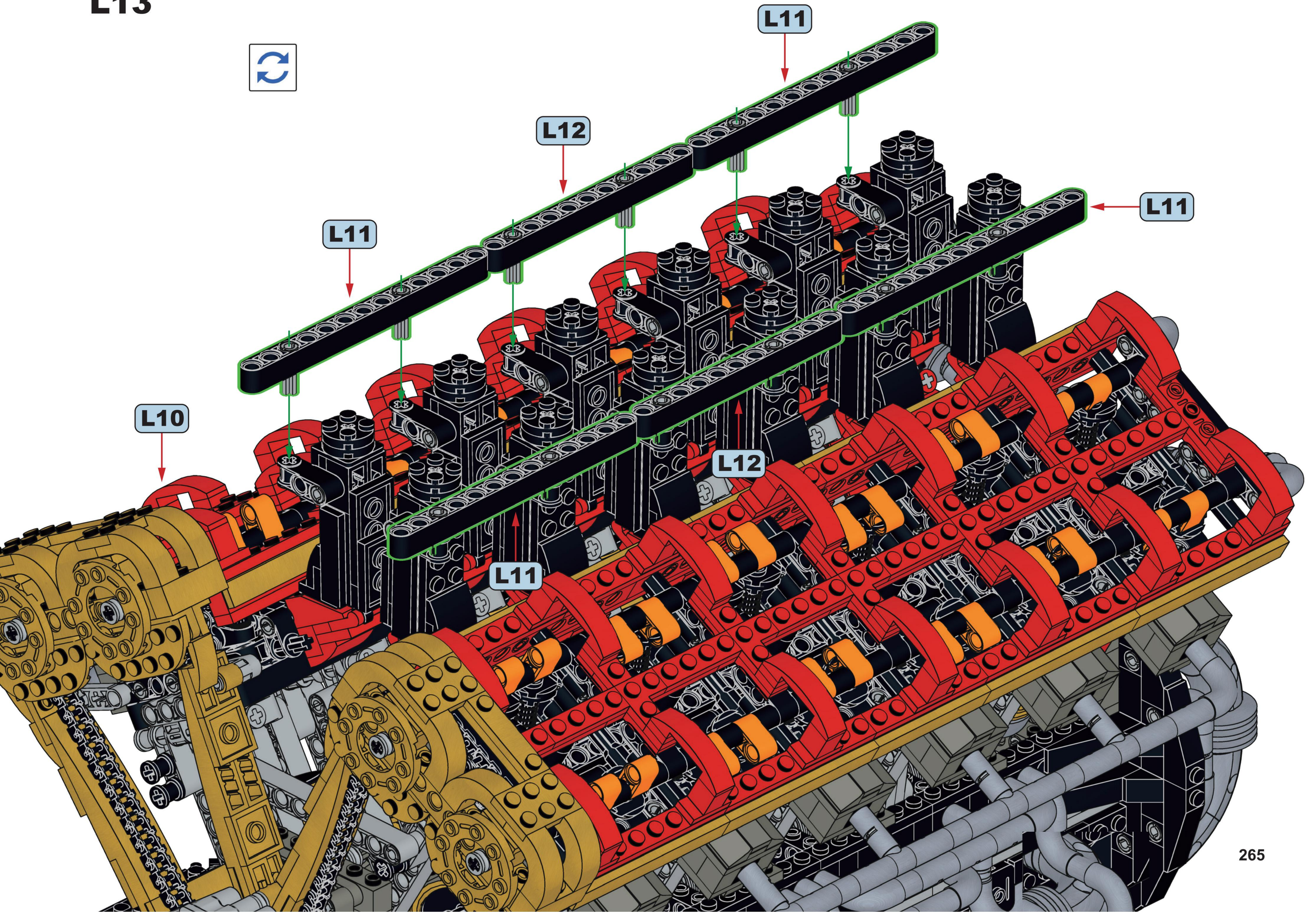

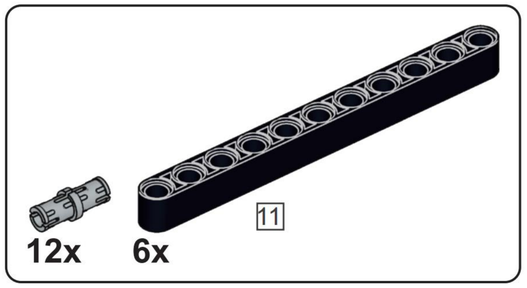

L14

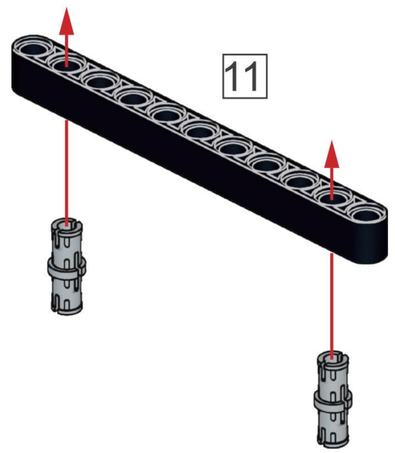

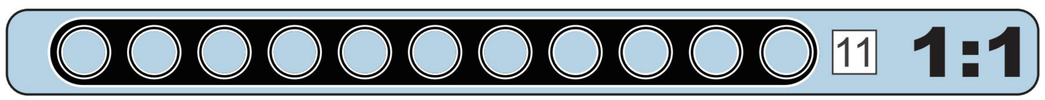

x6

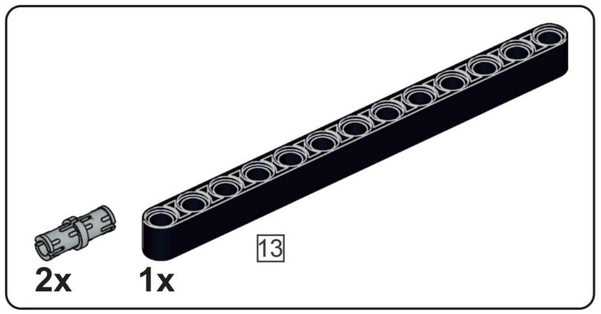

L15

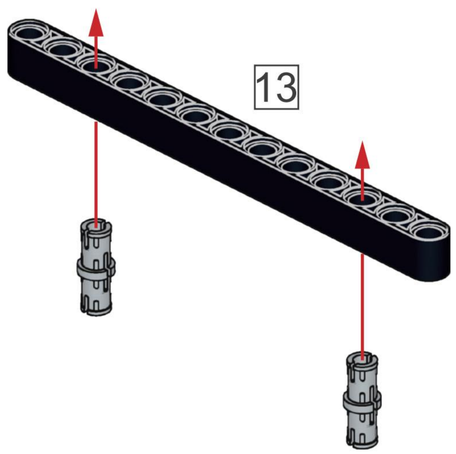

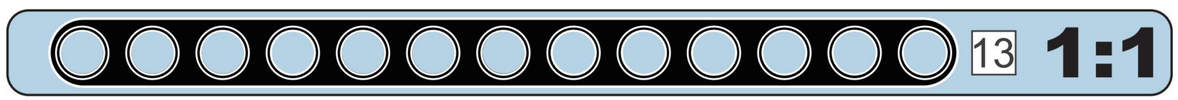

L16

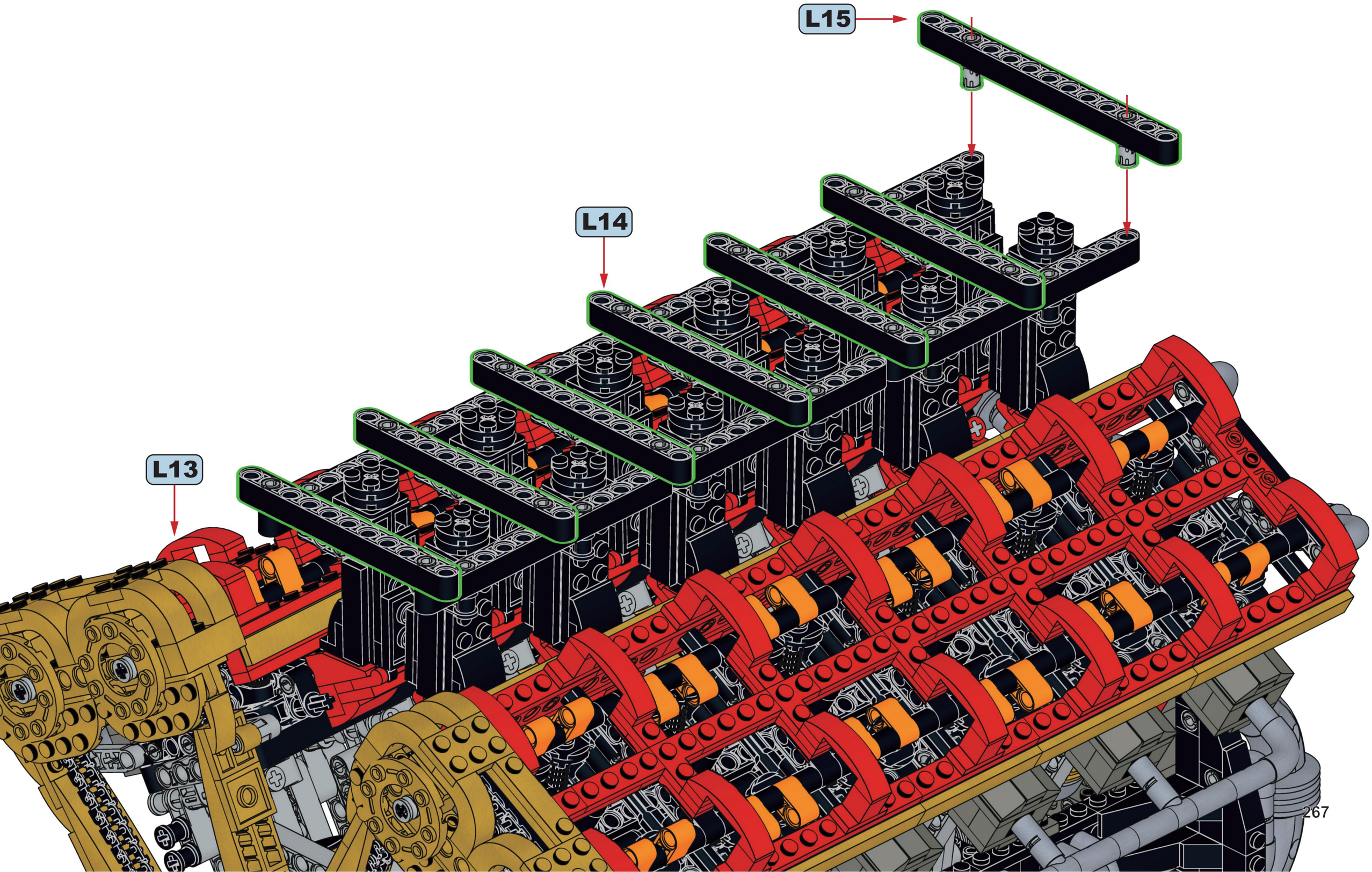

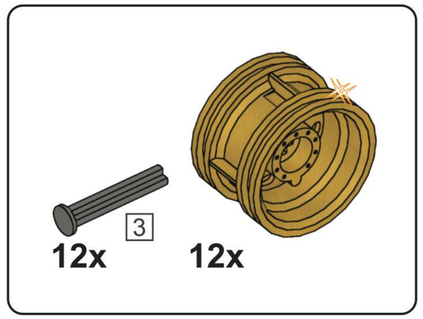

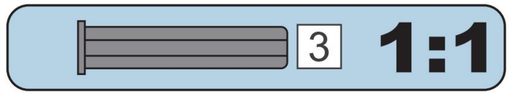

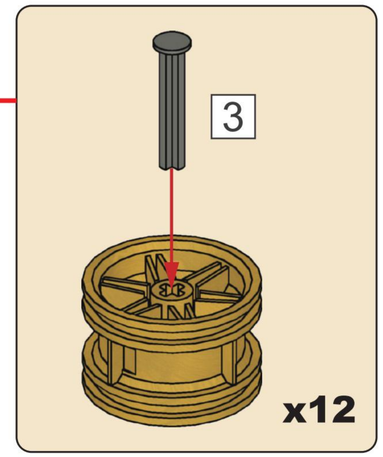

L17

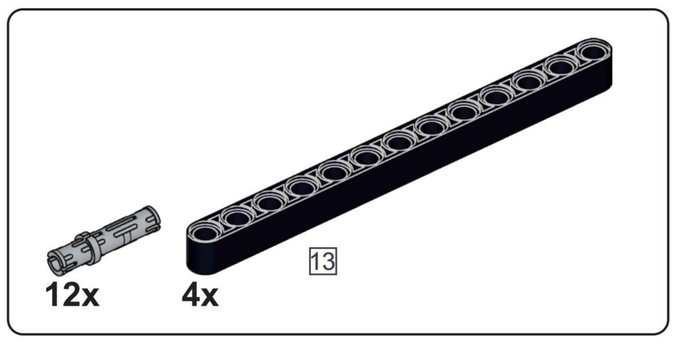

L18

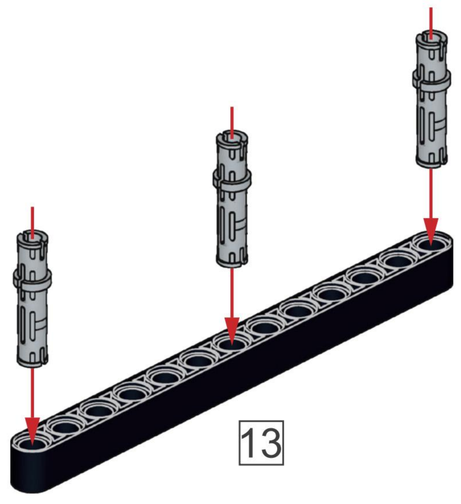

x4



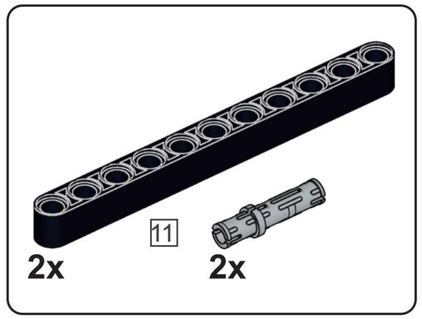

L19

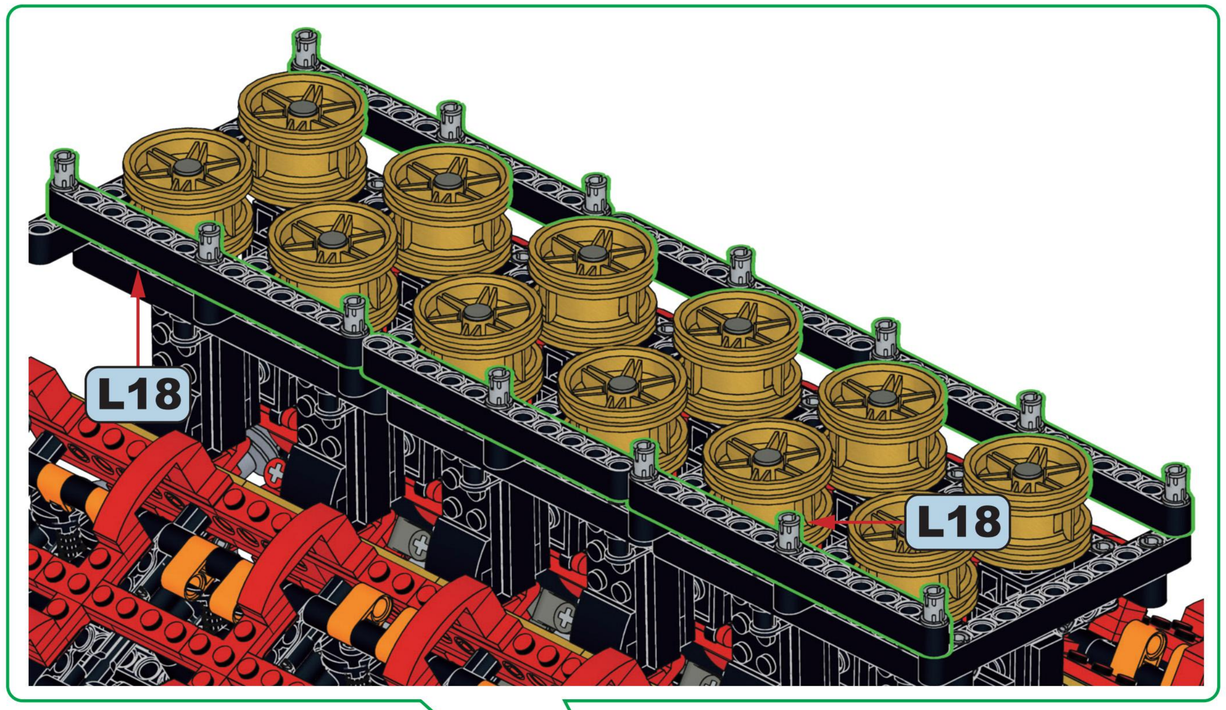

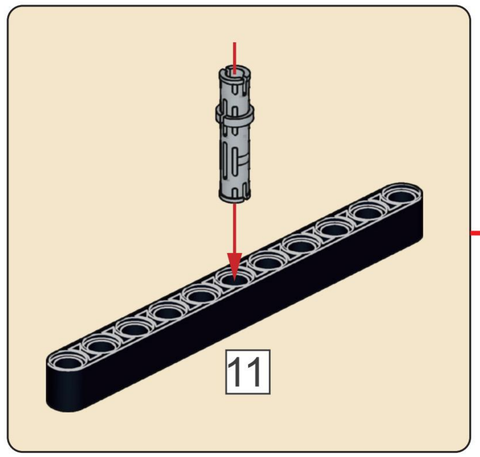

10x

L20

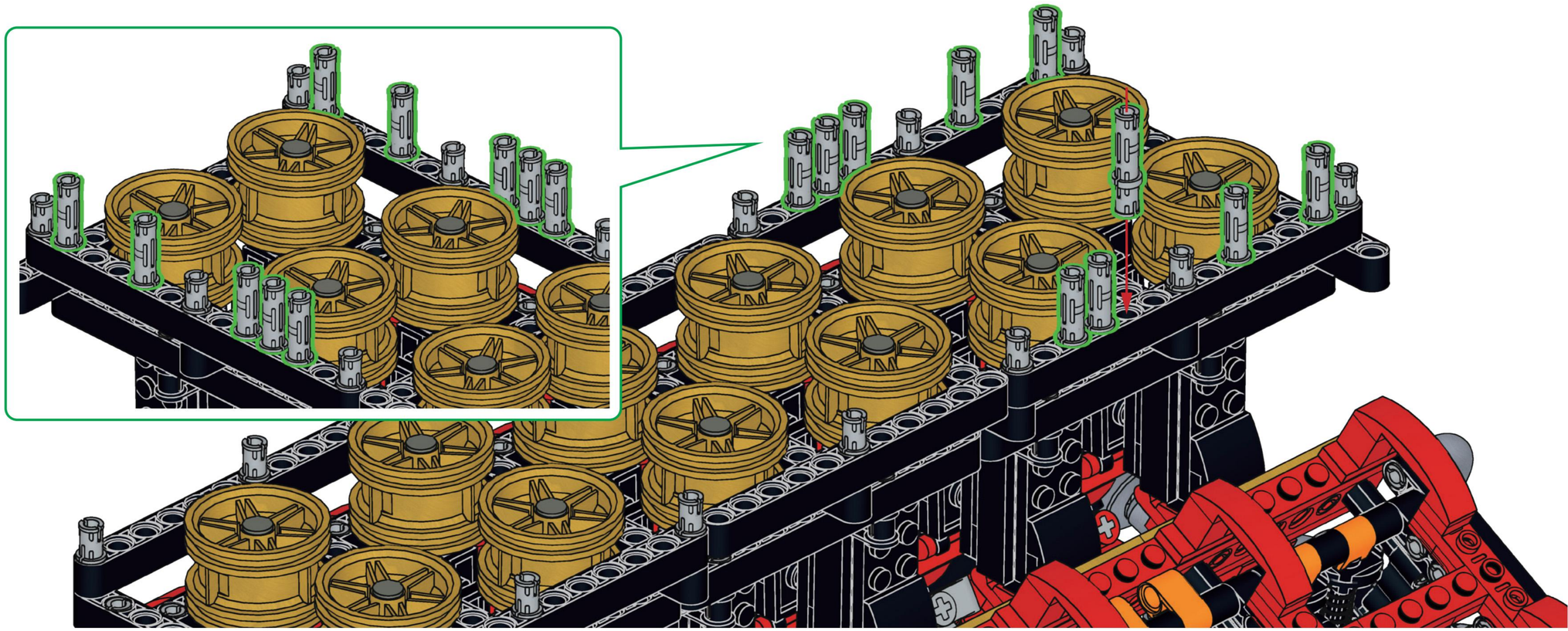

14x

L21

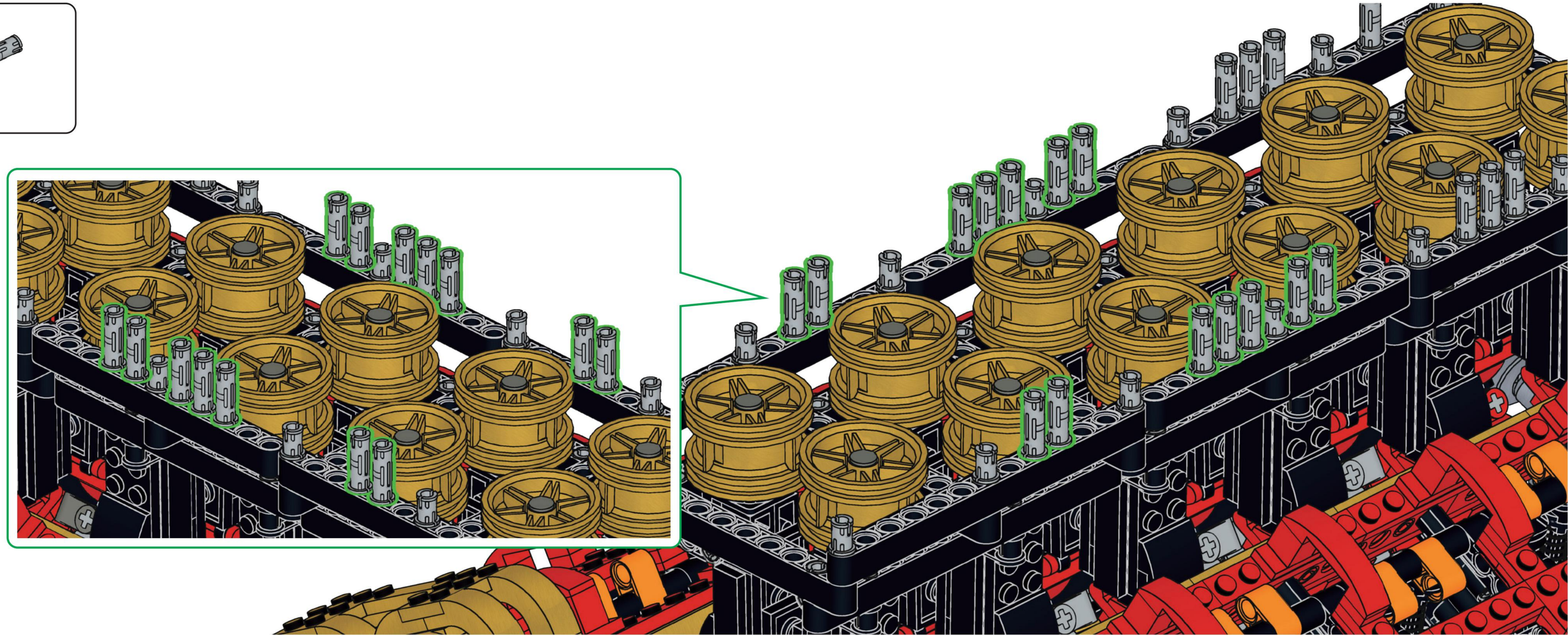

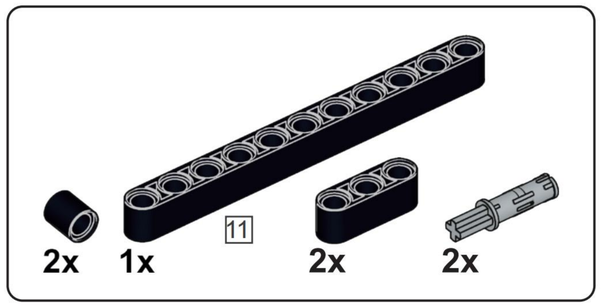

L22

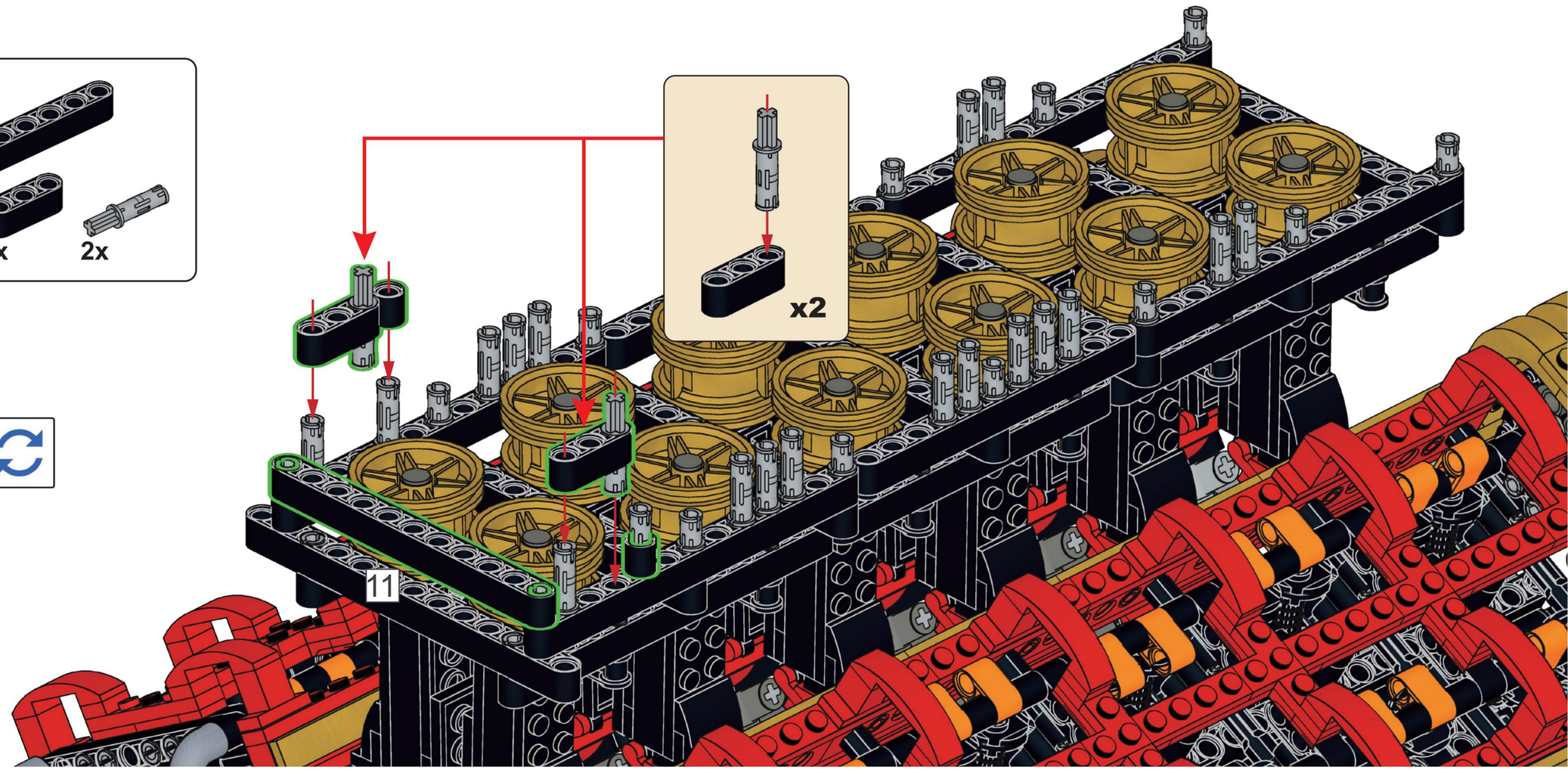

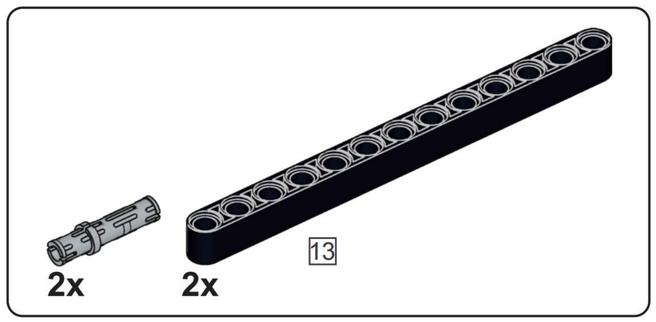

L23

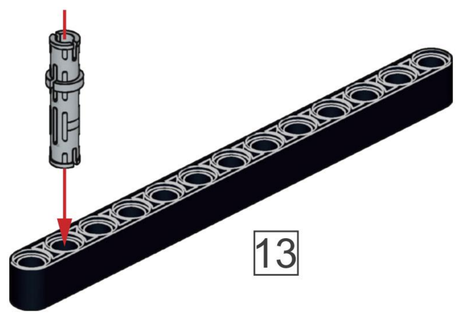

x2

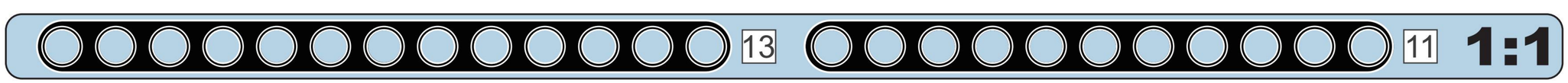

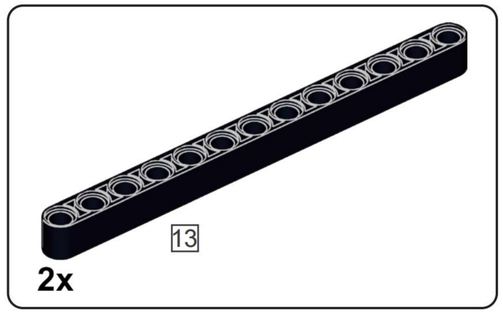

L24

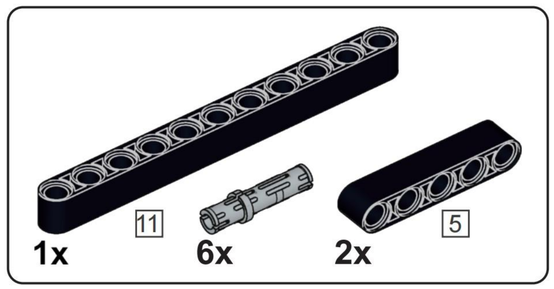

L25

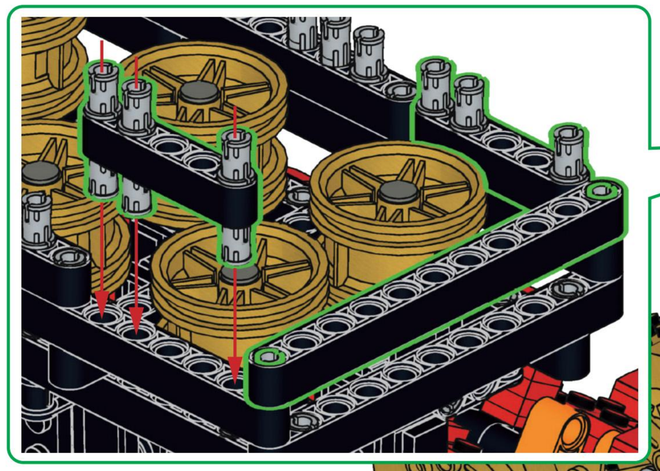

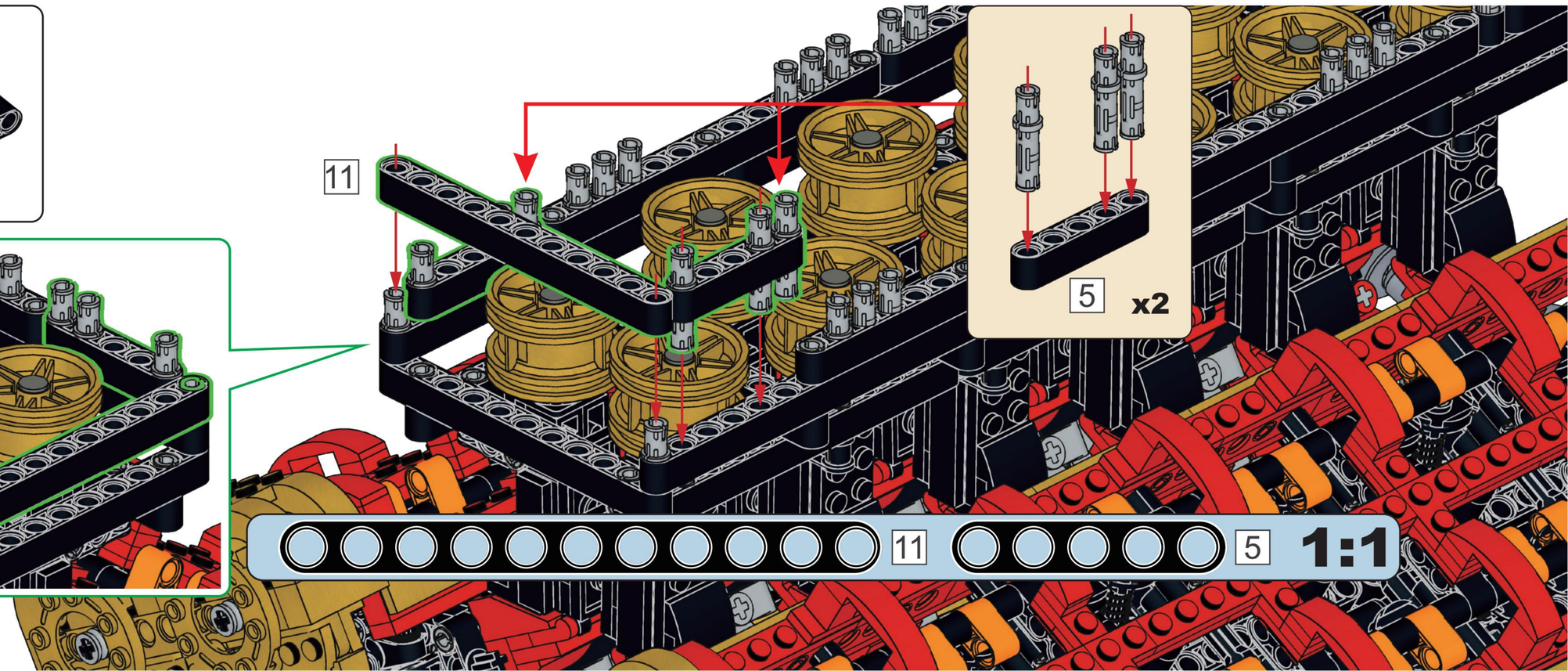

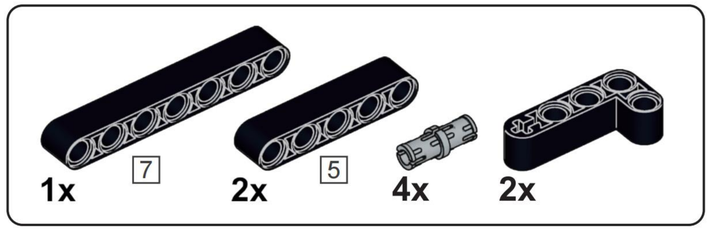

L26

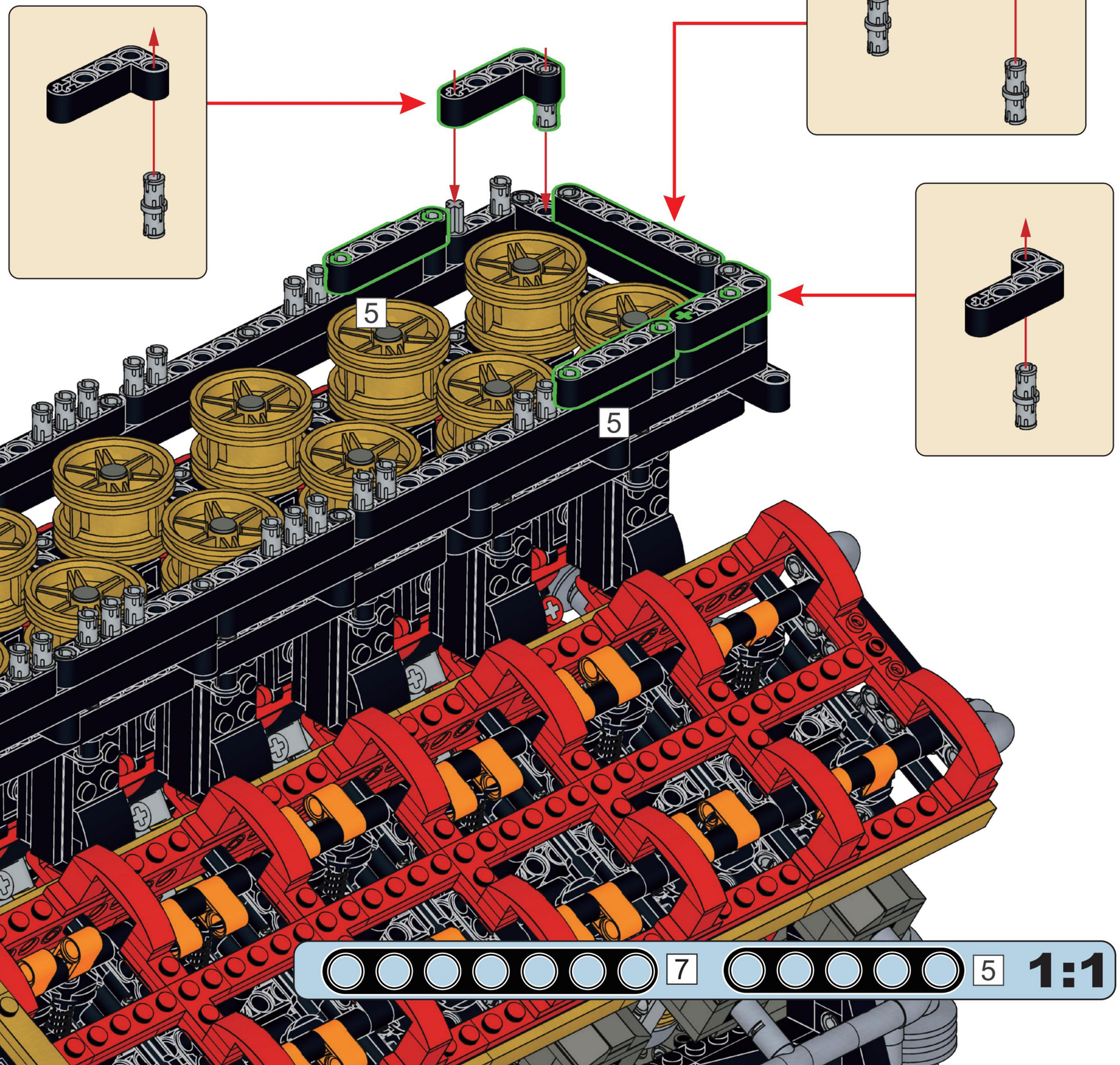

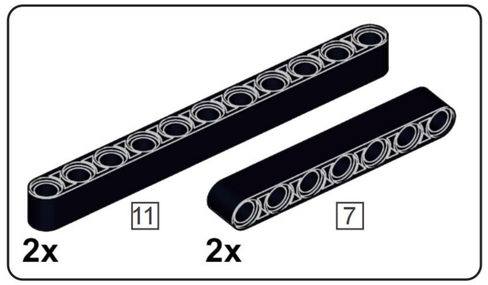

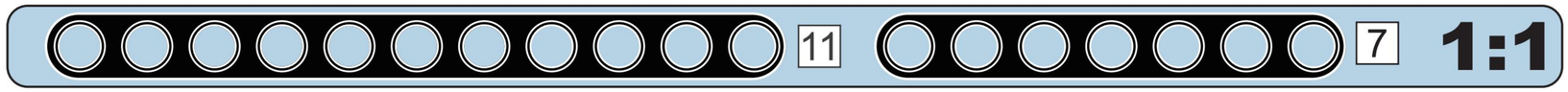

L27

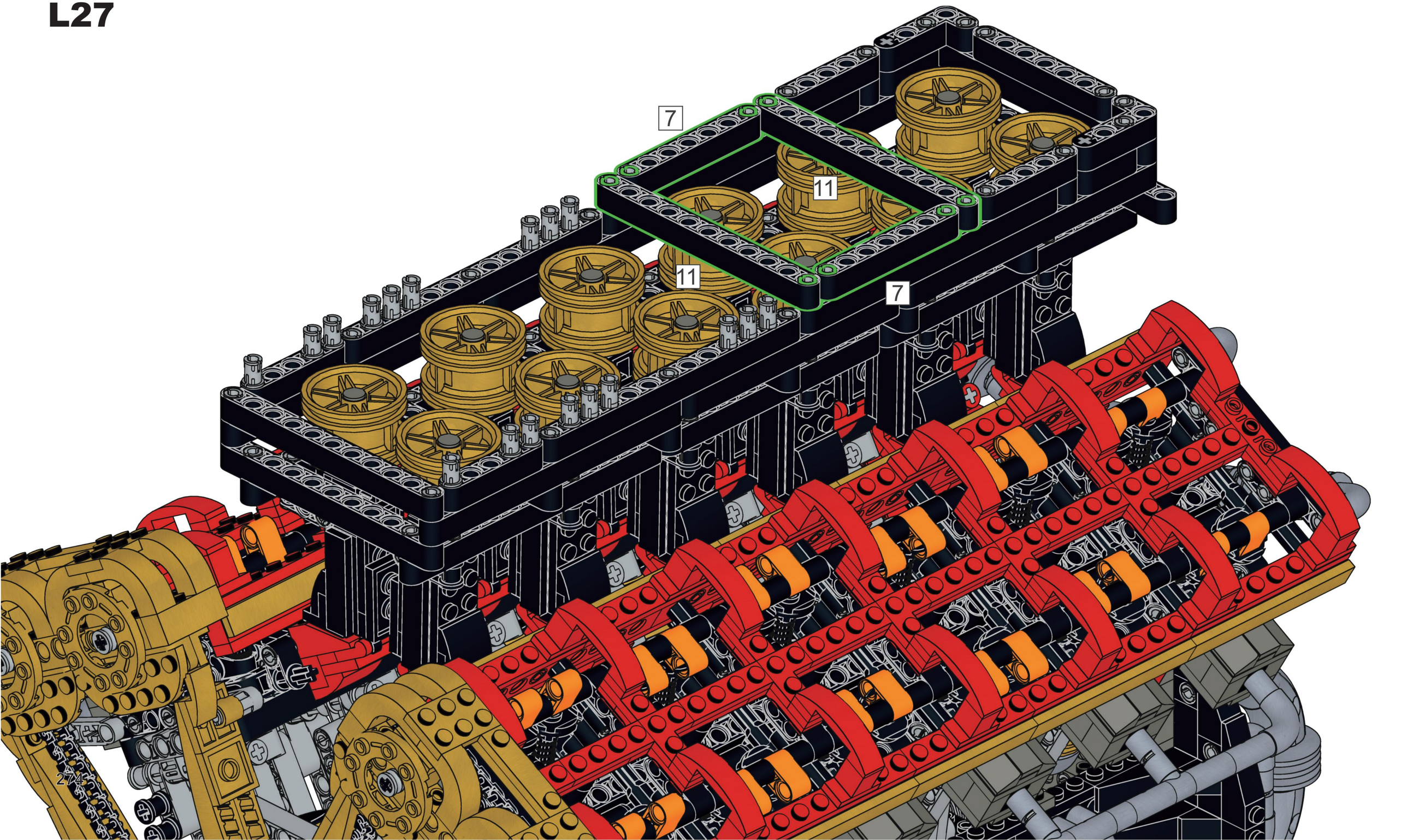

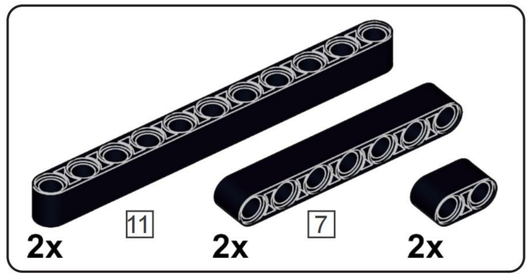

L28

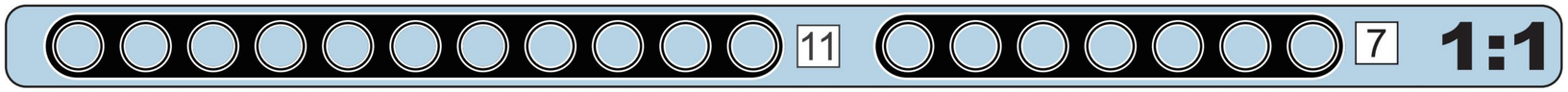

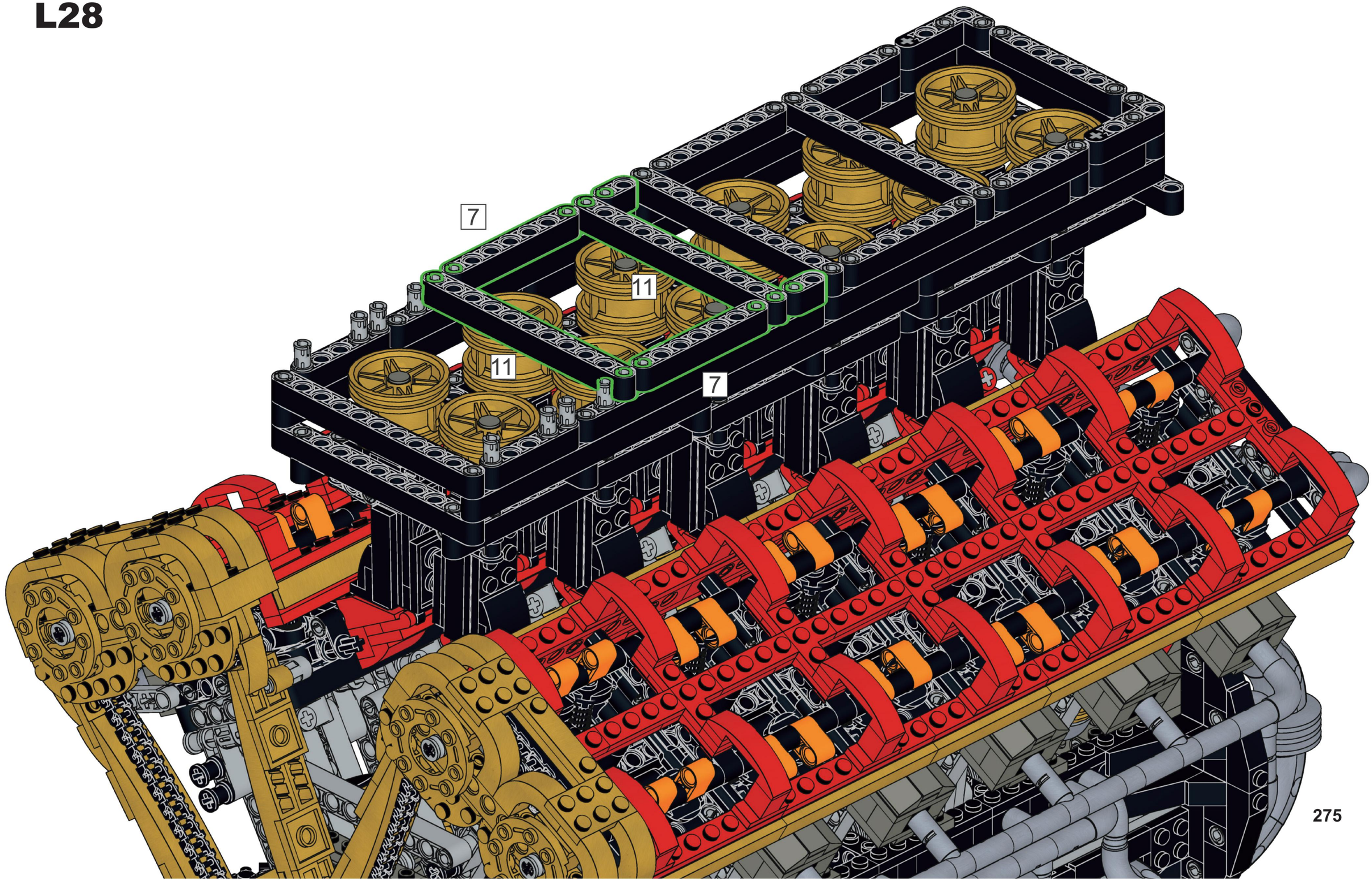

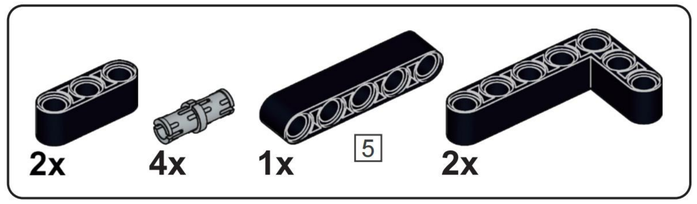

L29

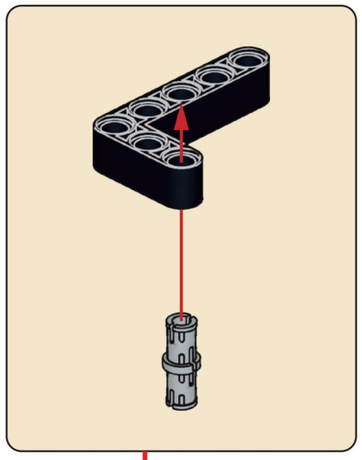

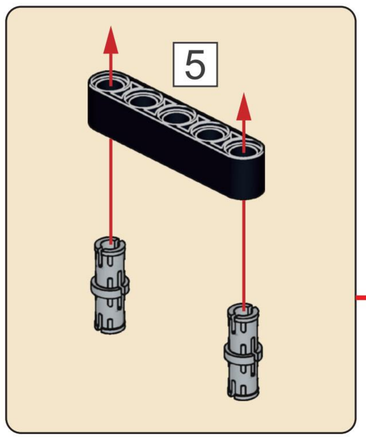

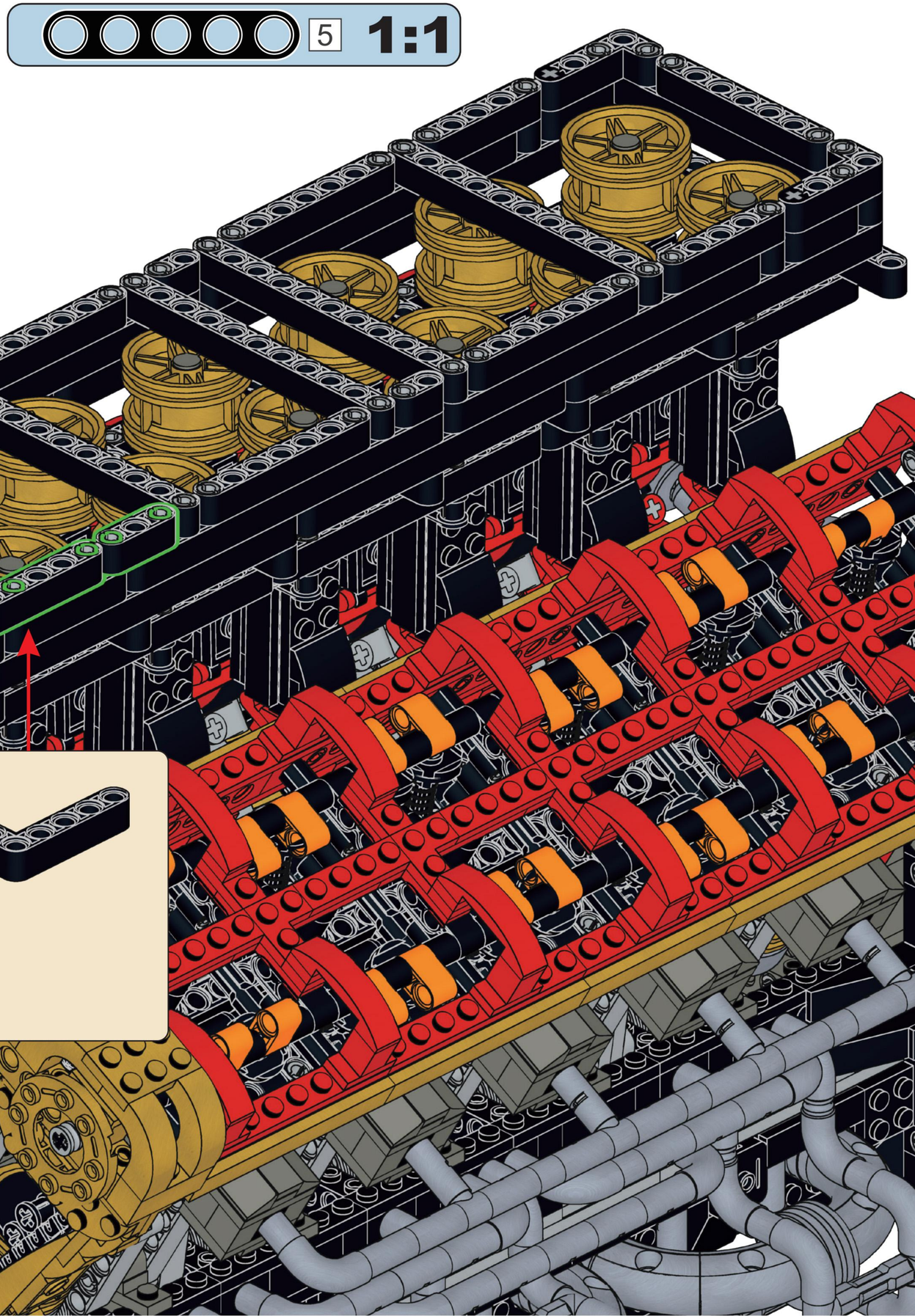

13

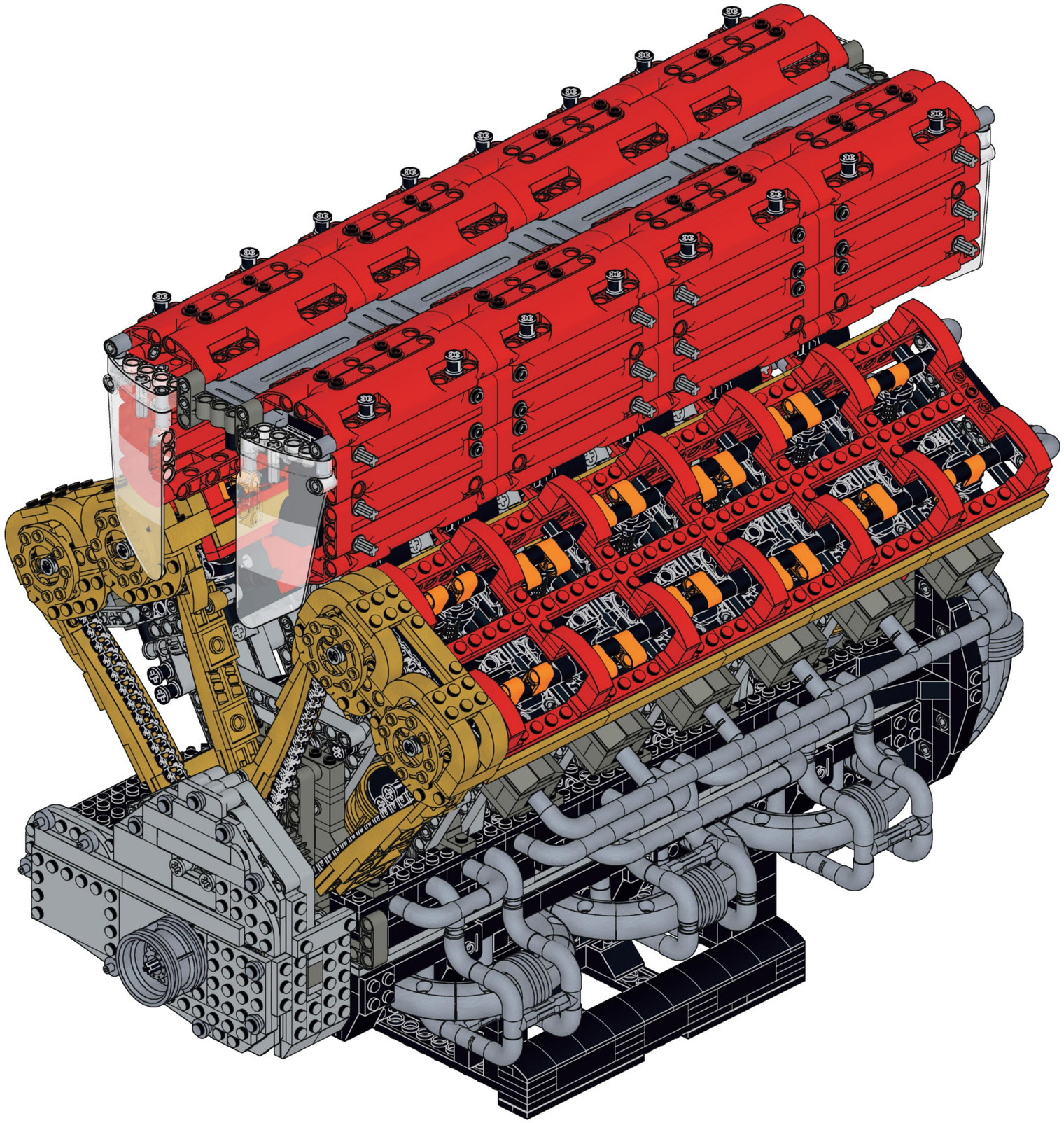

M

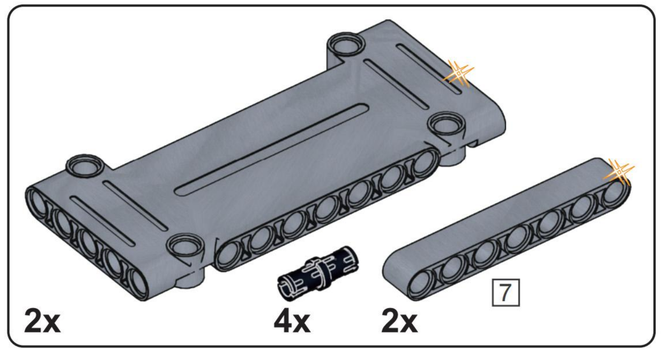

M1

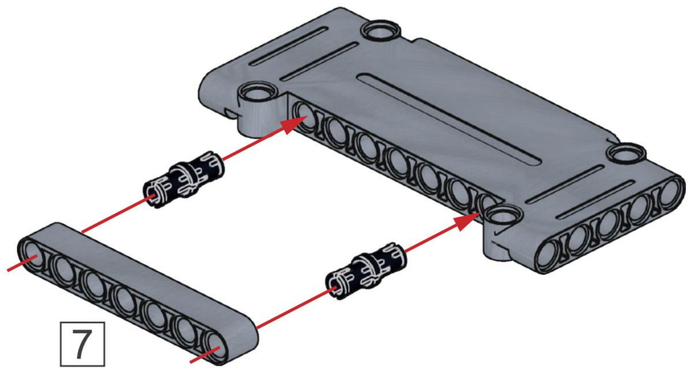

x2

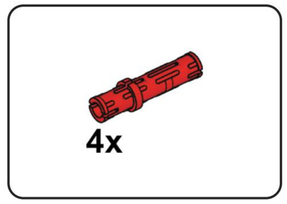

M2

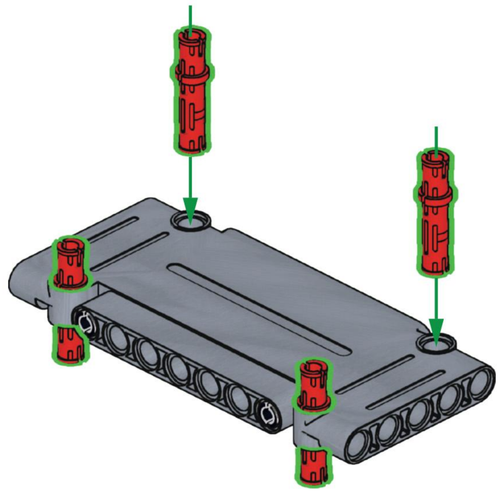

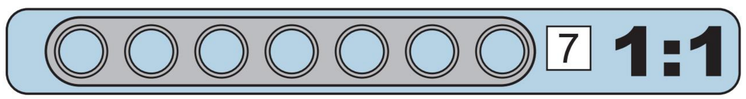

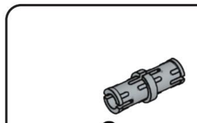

M3

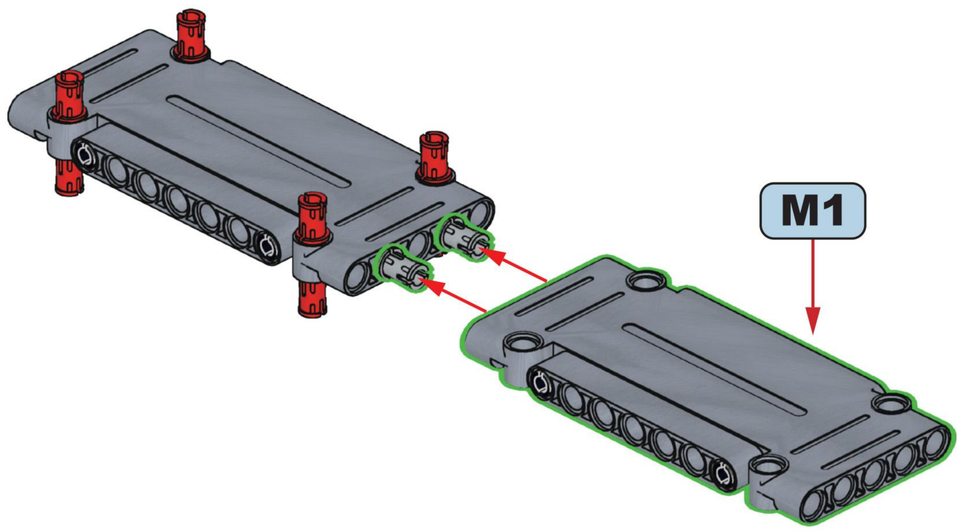

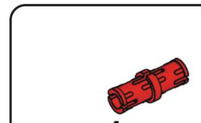

M4

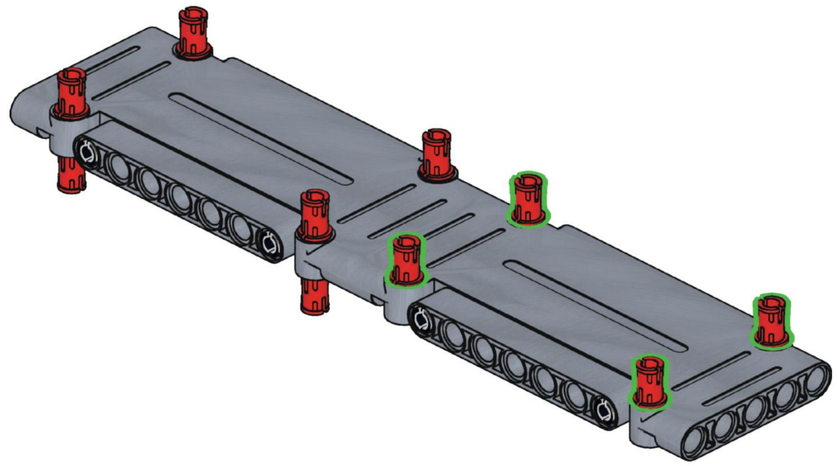

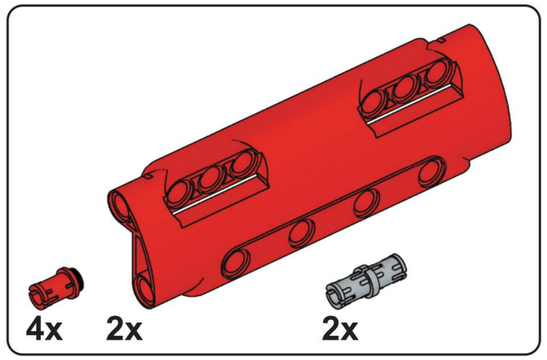

M5

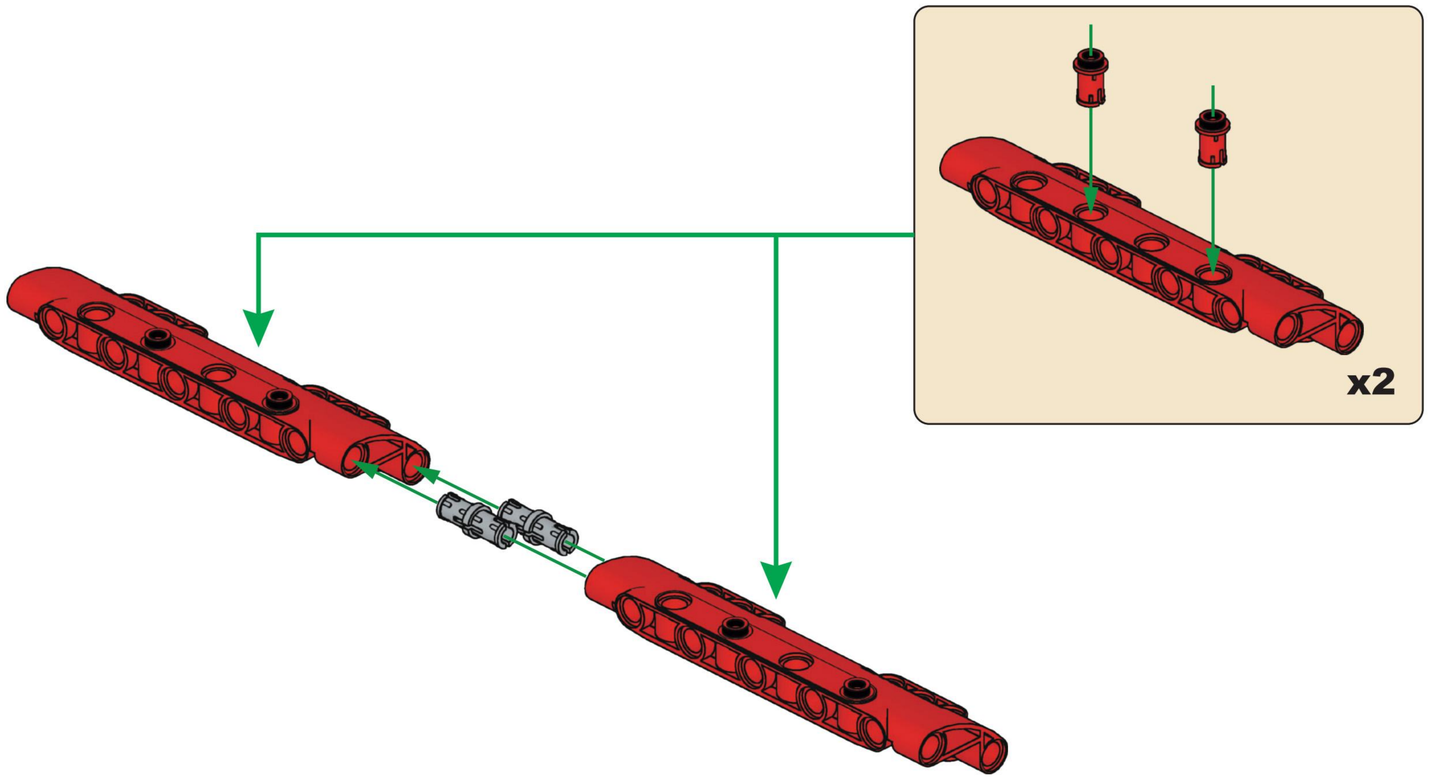

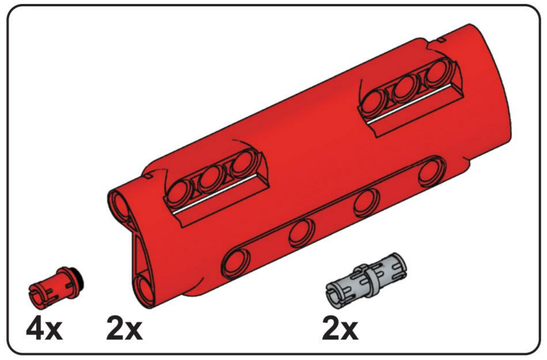

M6

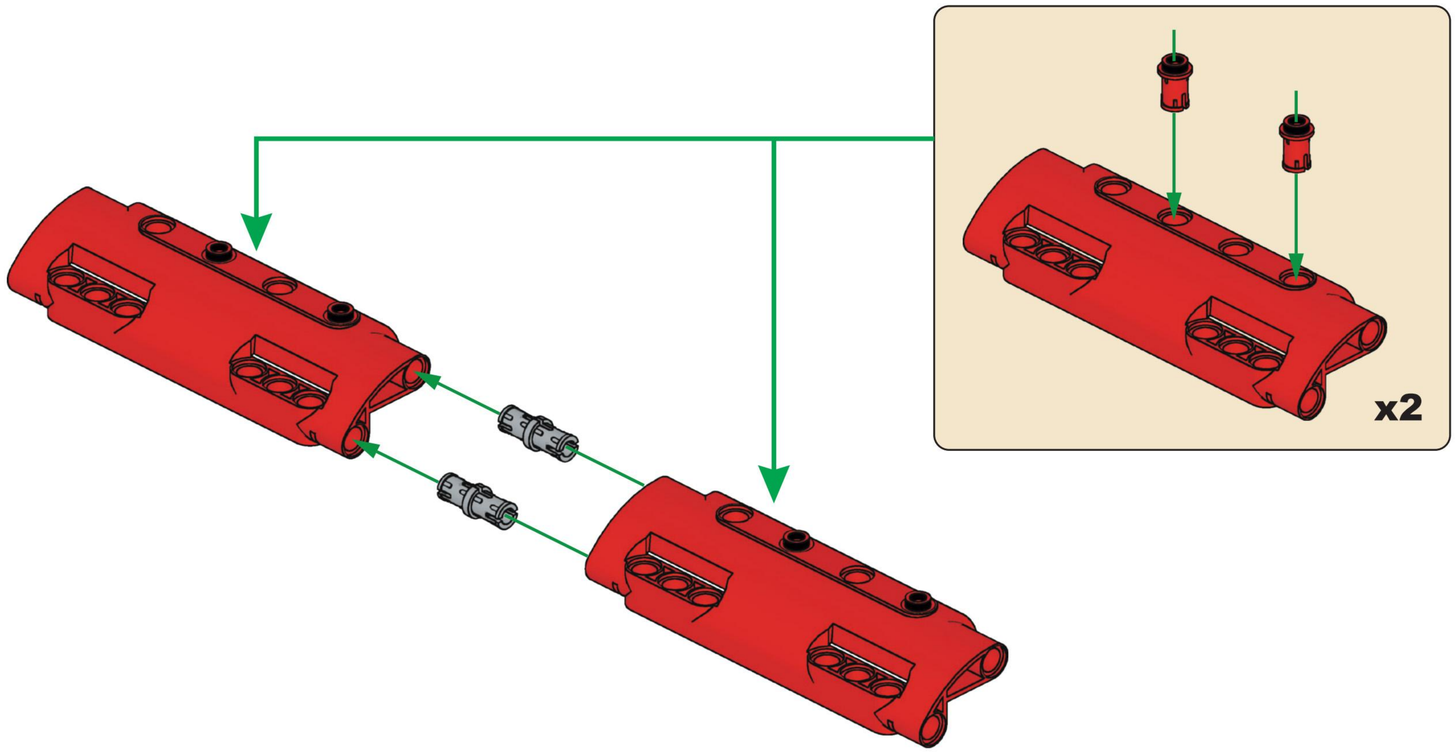

M7

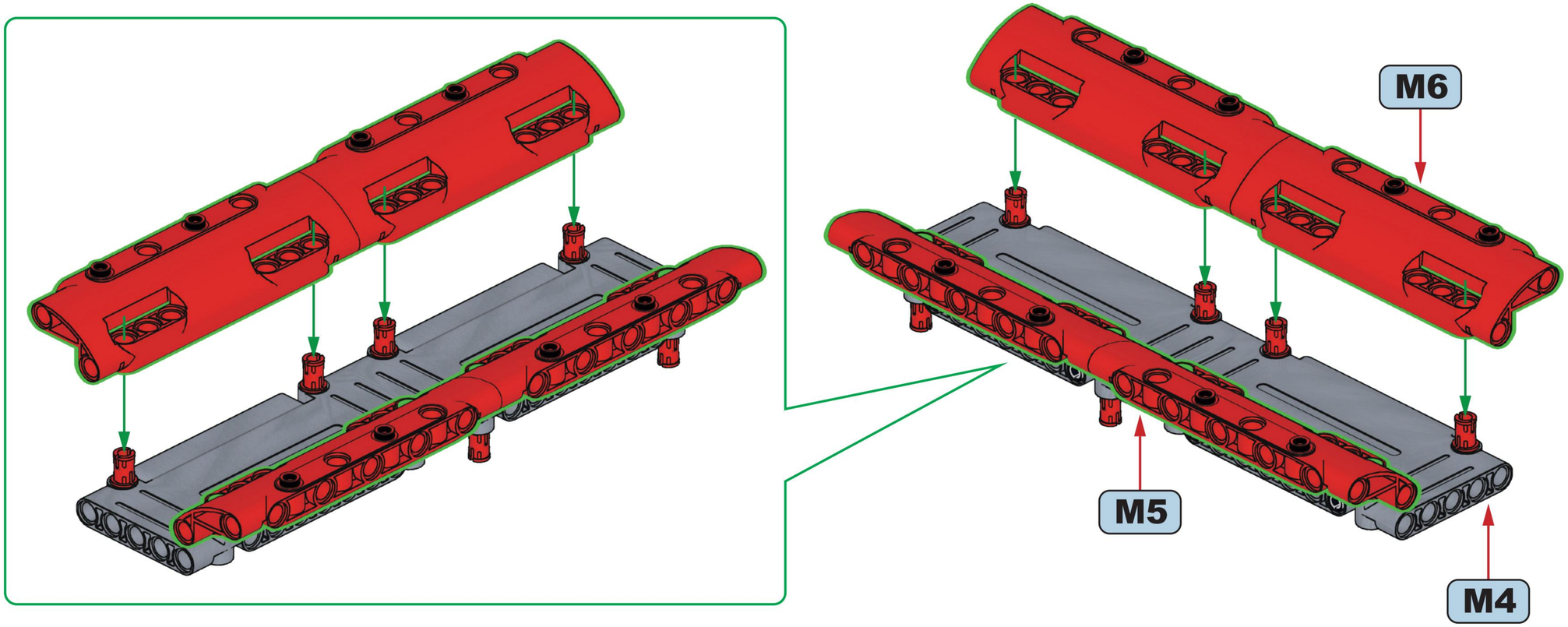

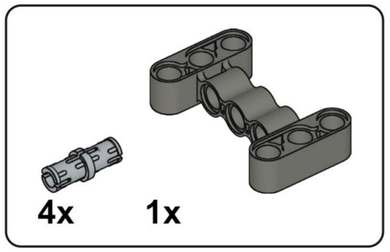

M8

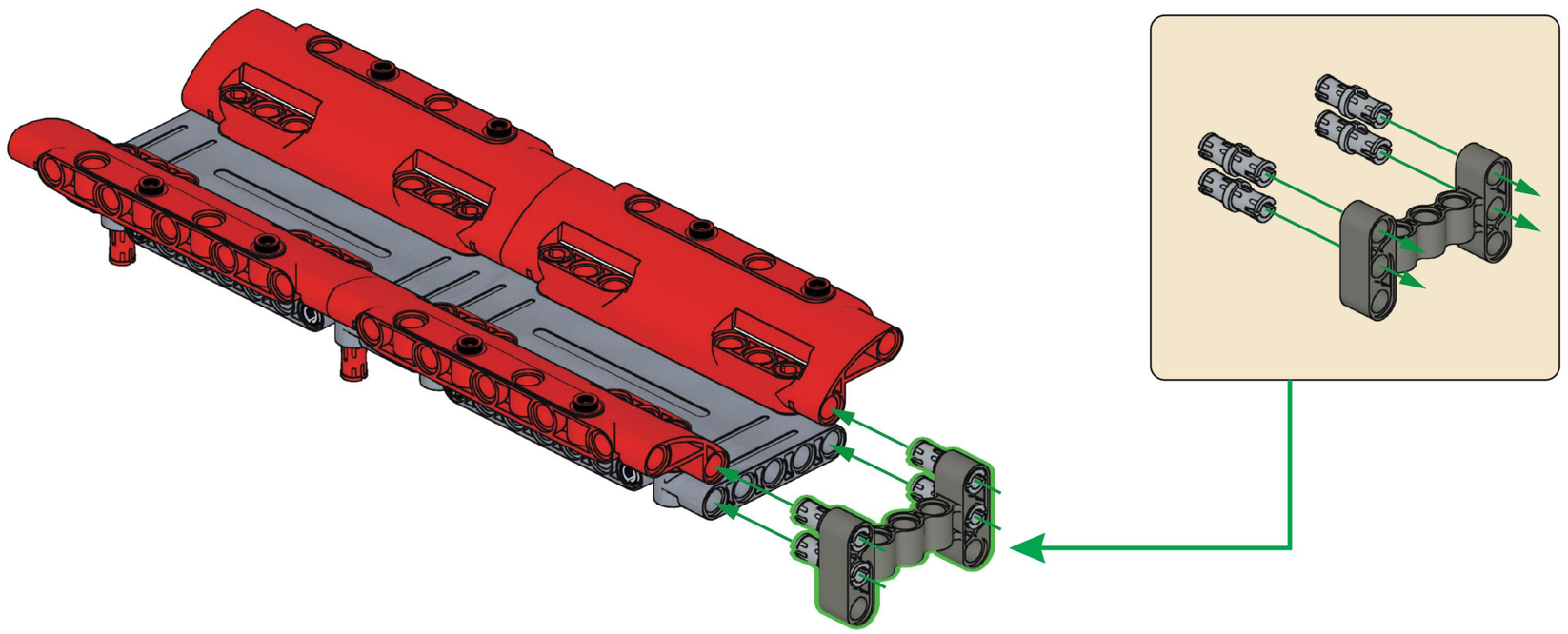

M9



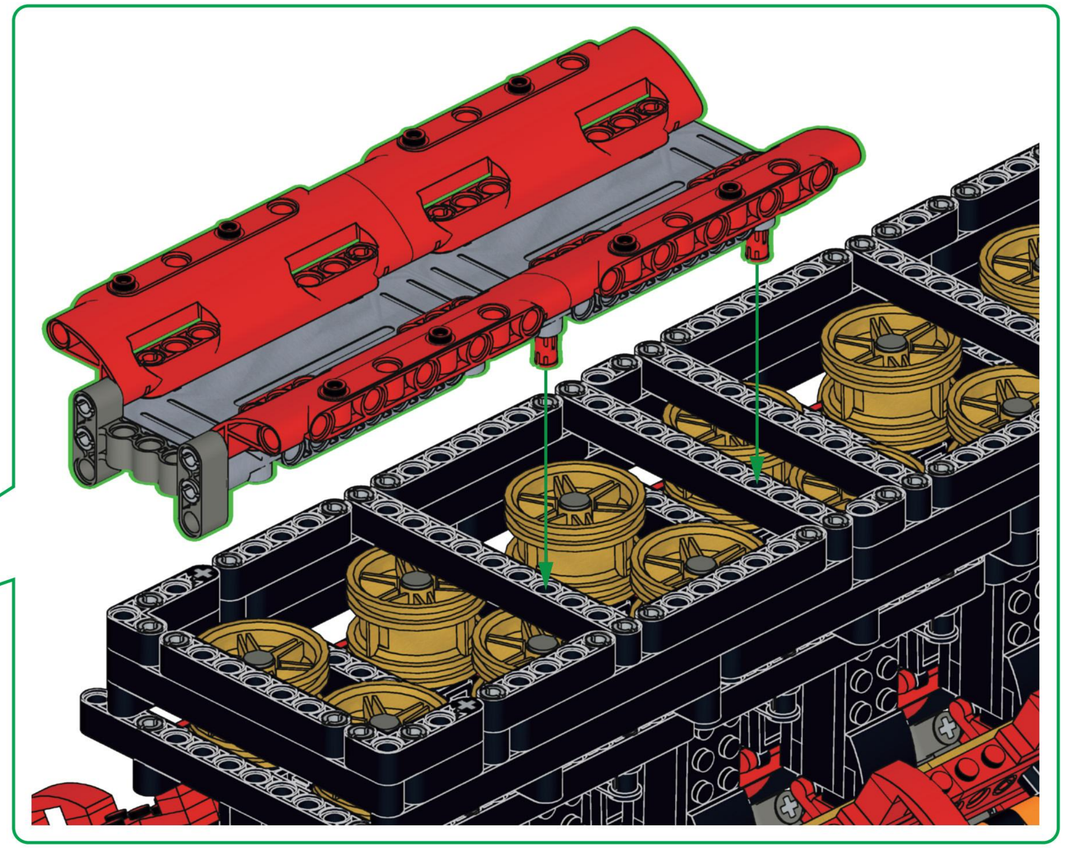

L29

M8

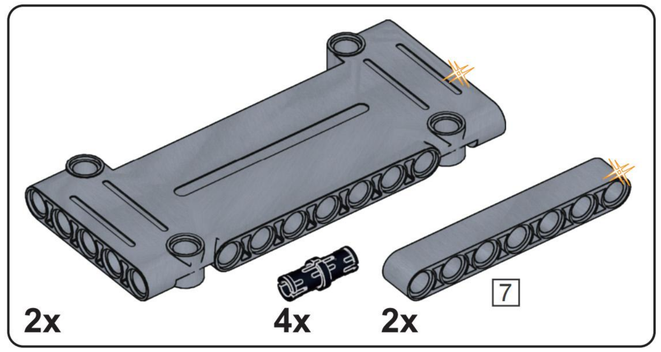

M10

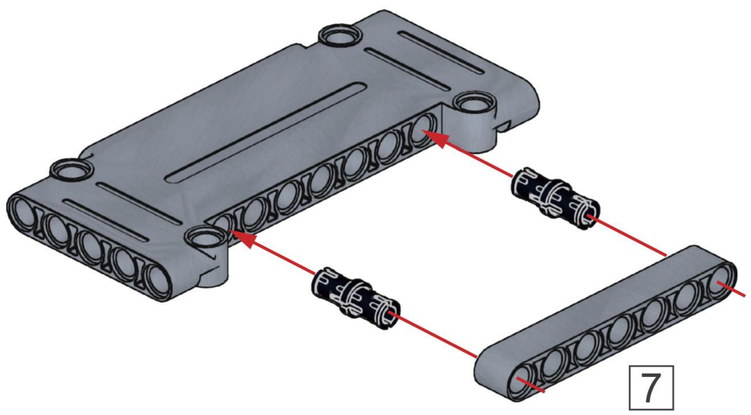

x2

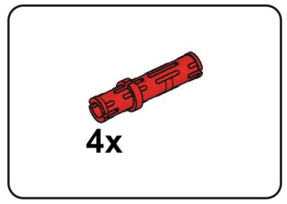

M11

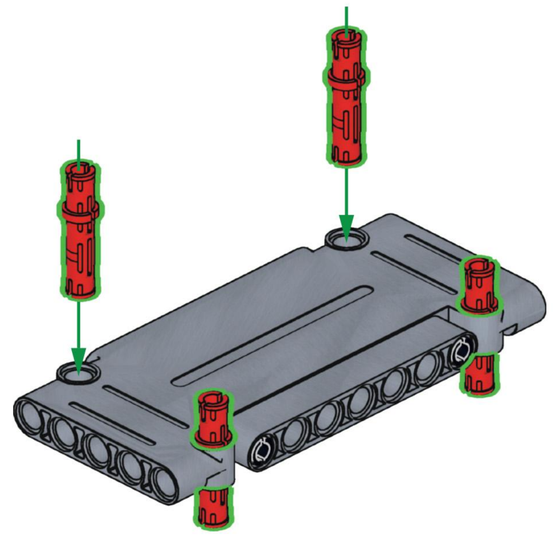

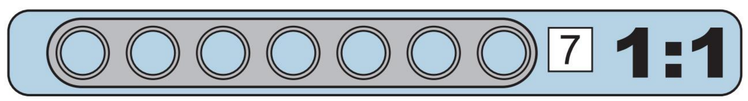

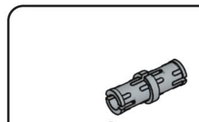

M12

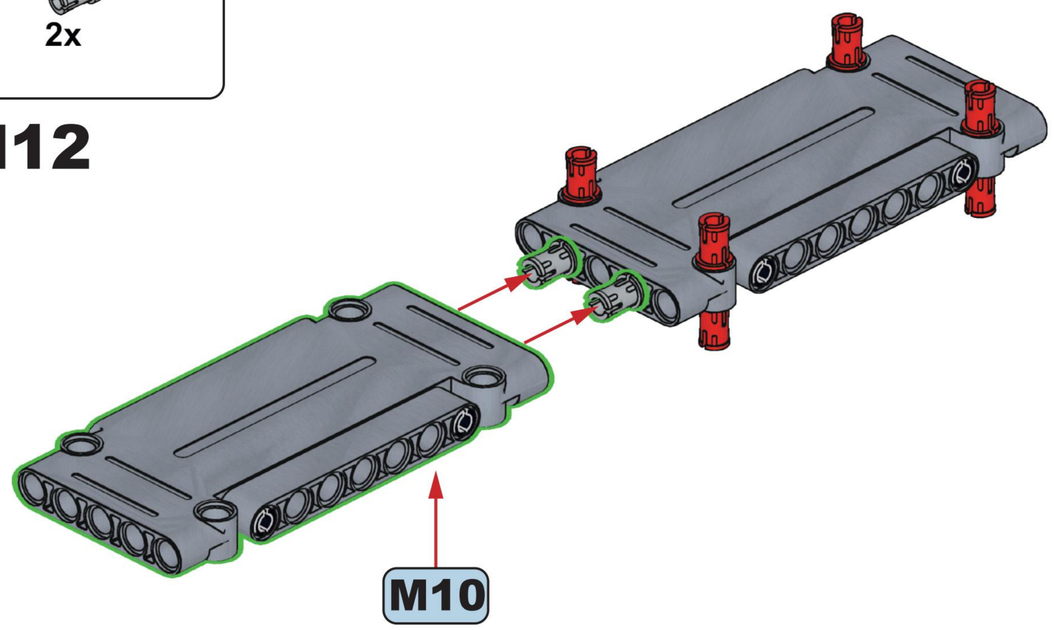

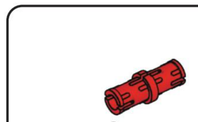

M13

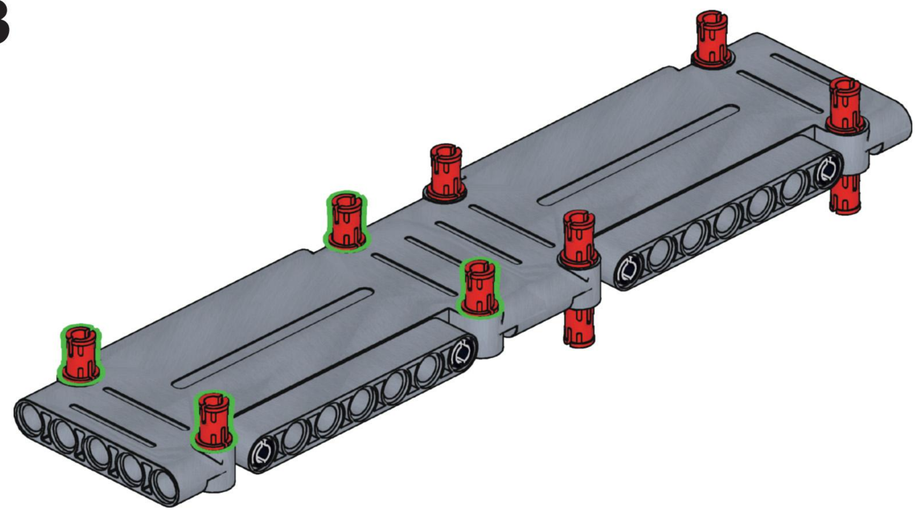

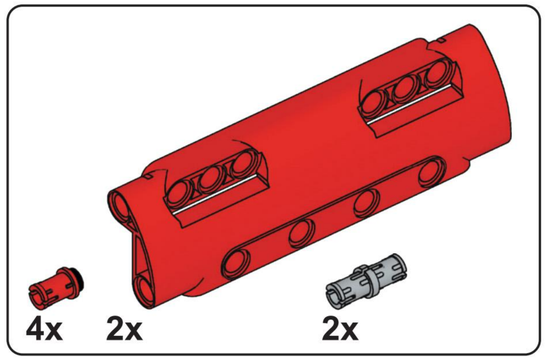

M14

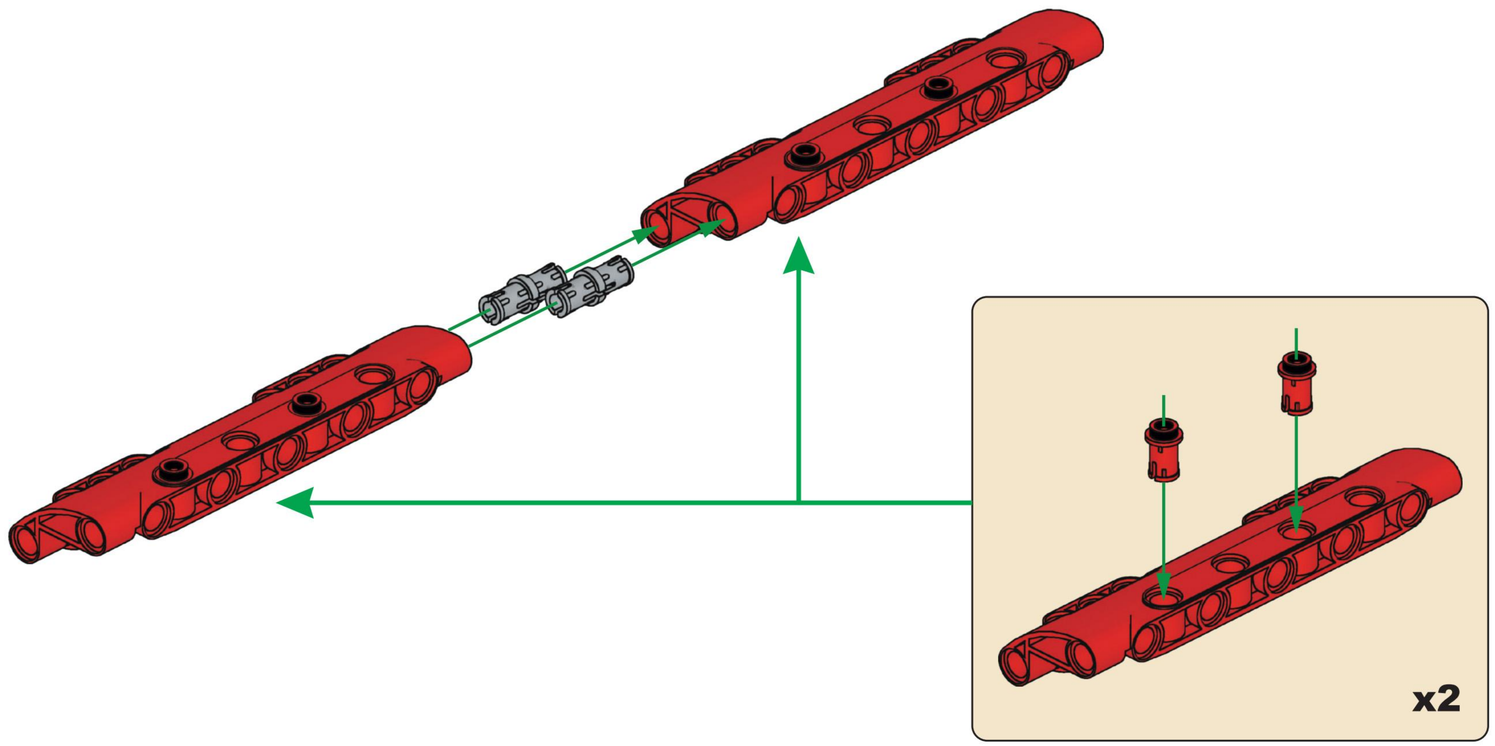

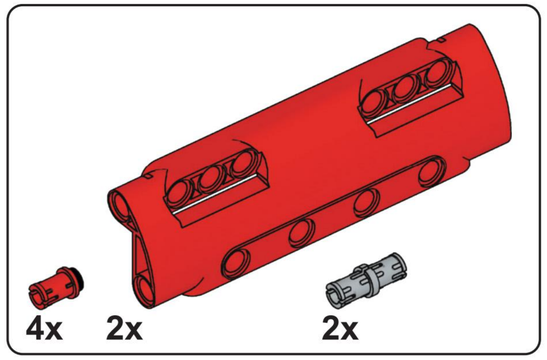

M15

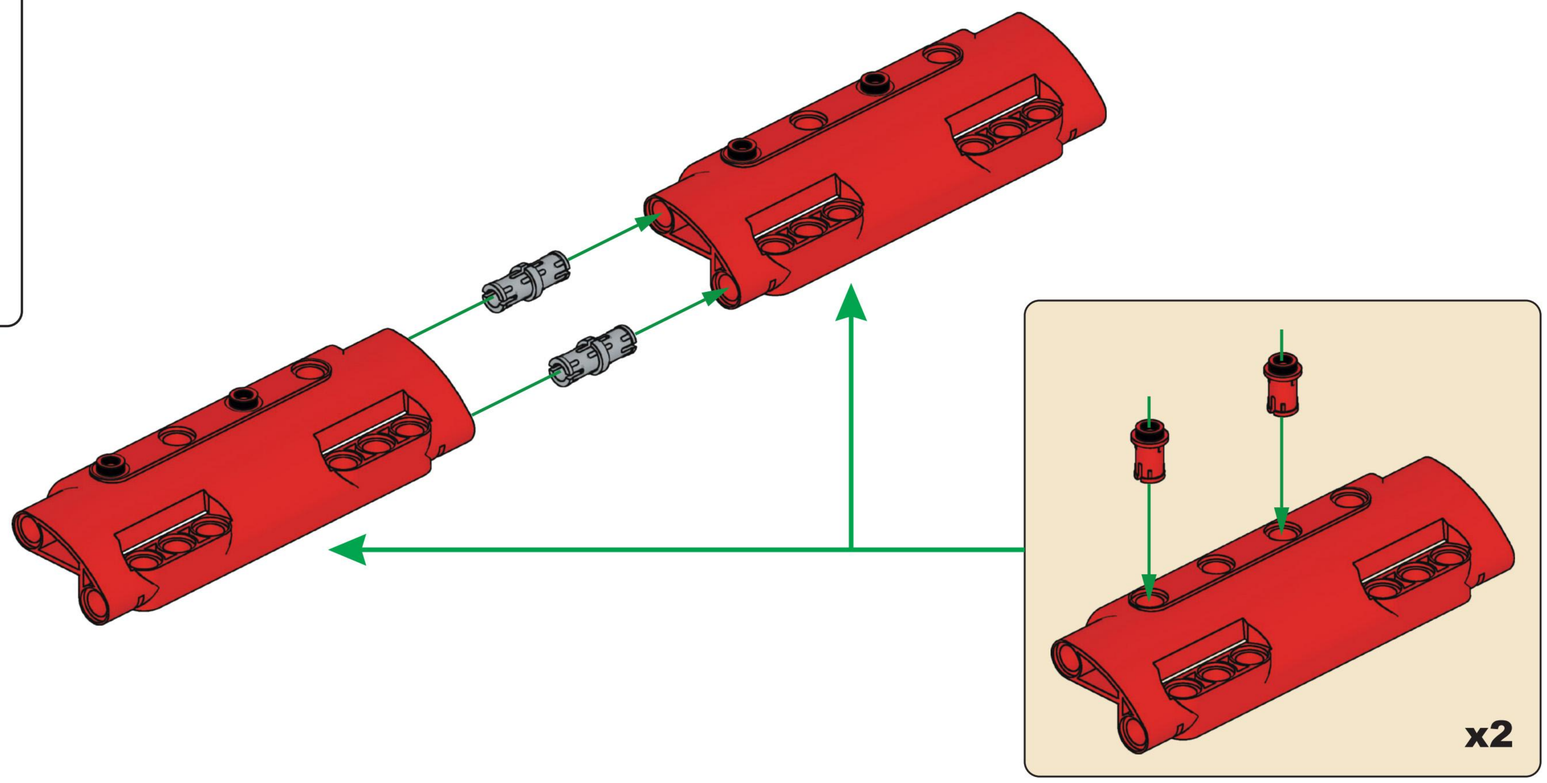

M16

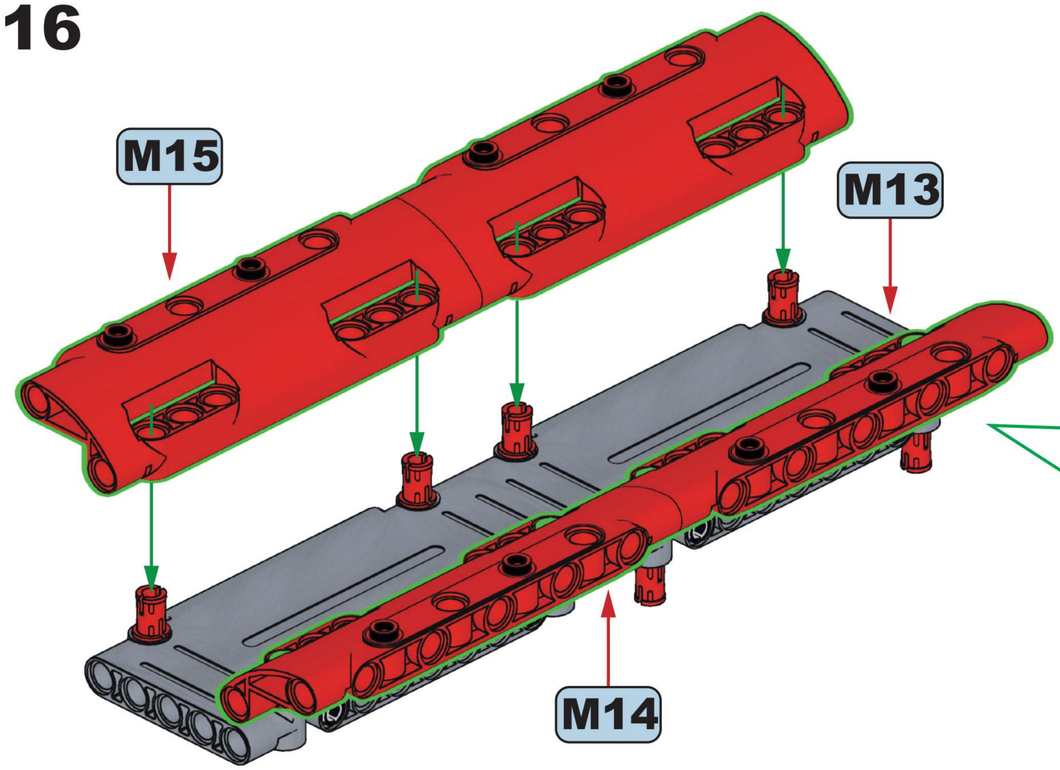

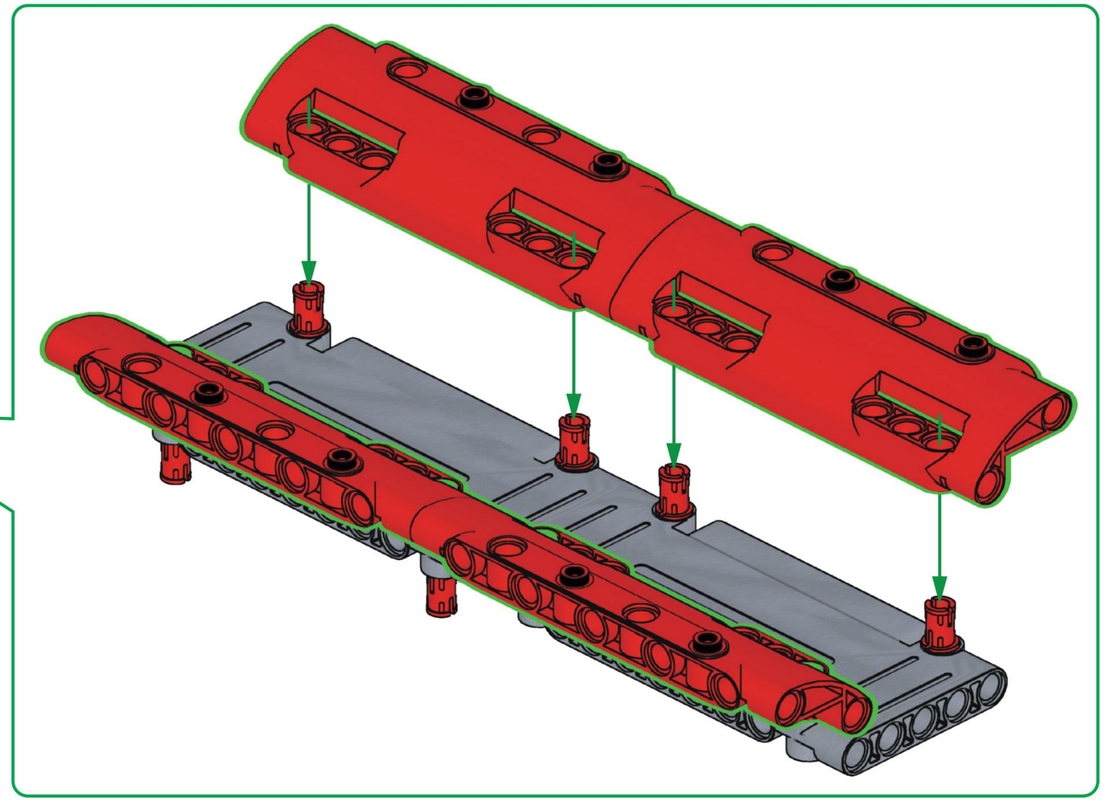

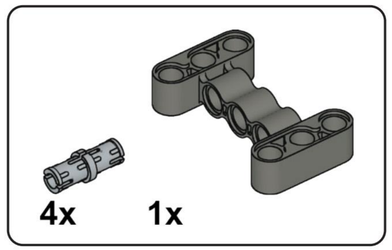

M17

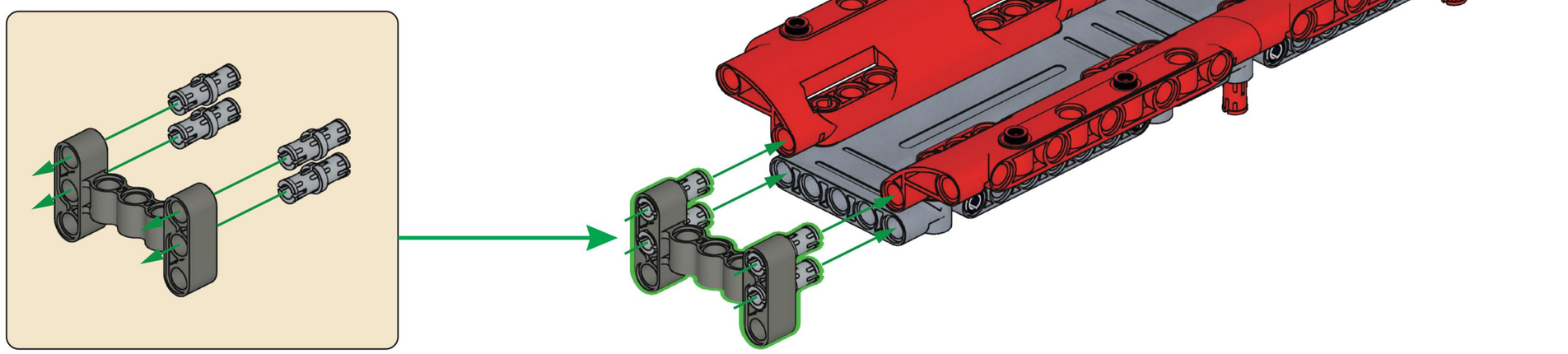

M18

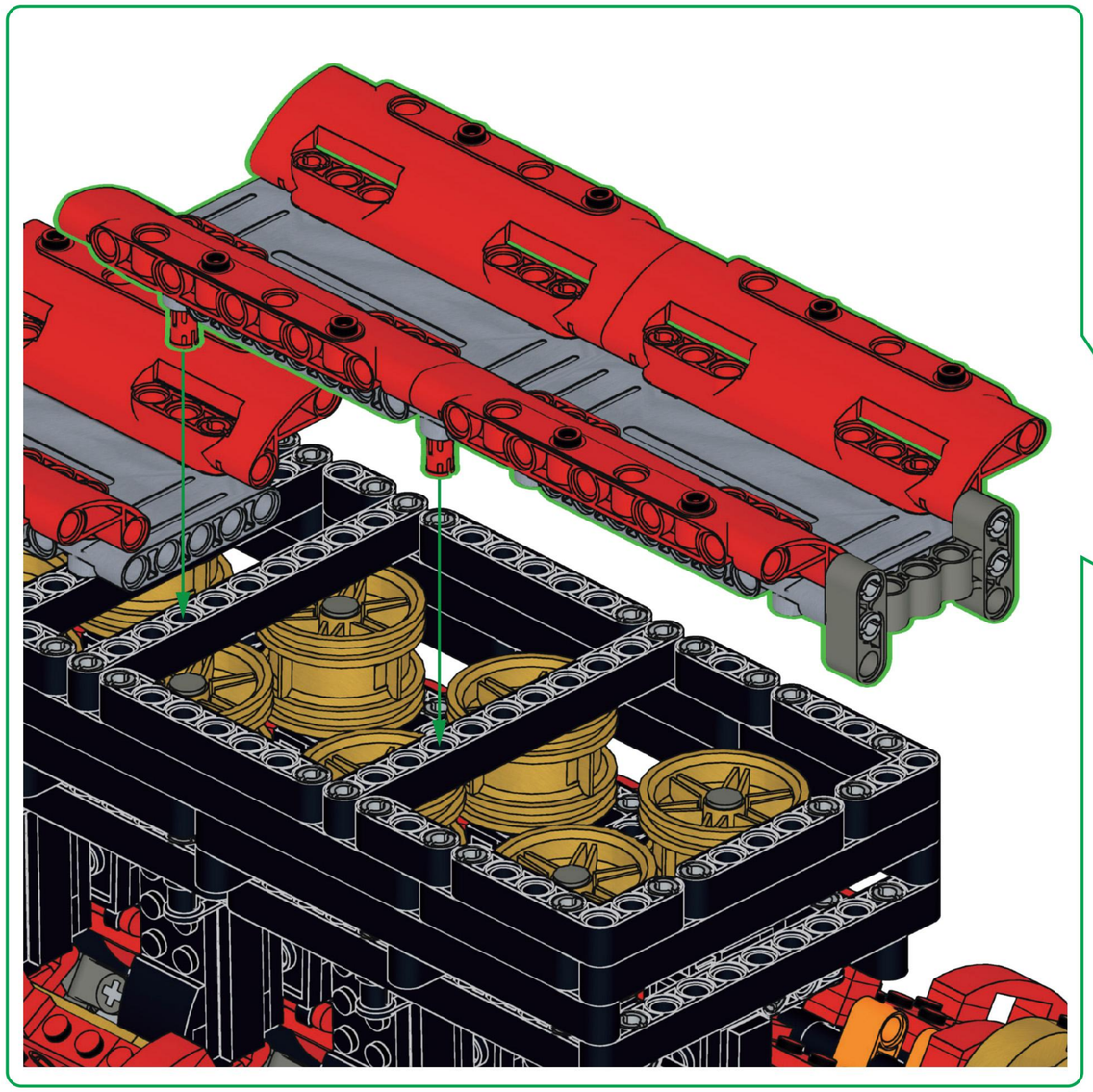

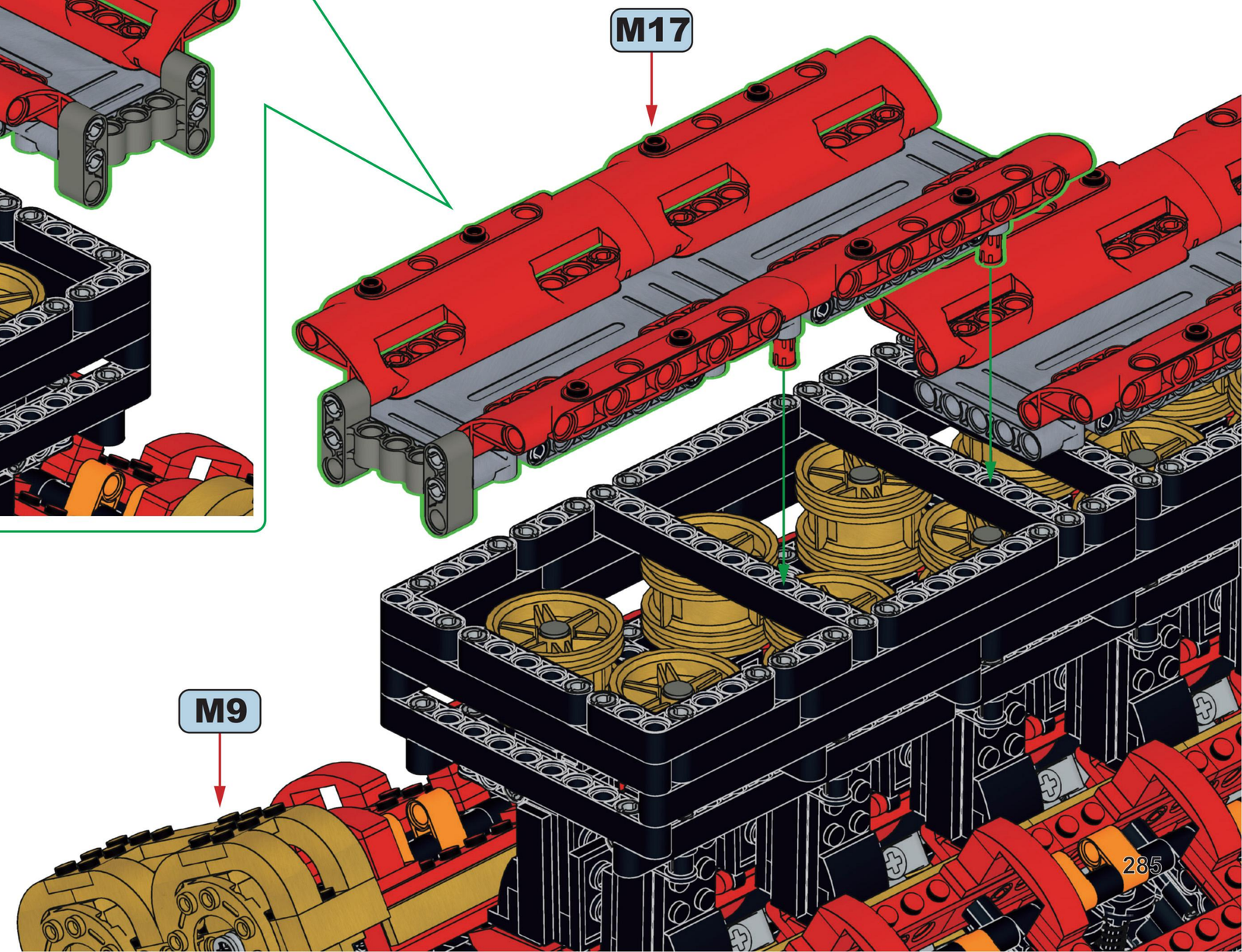

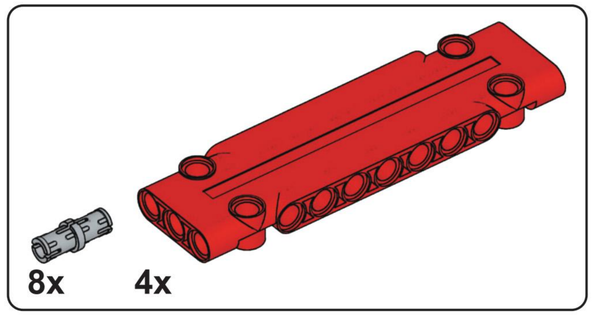

M19

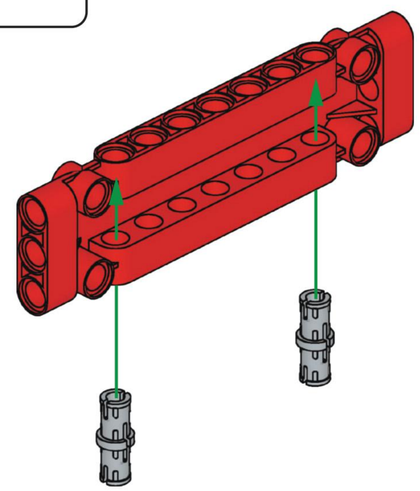

x4

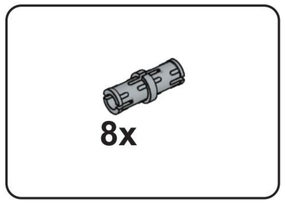

M20

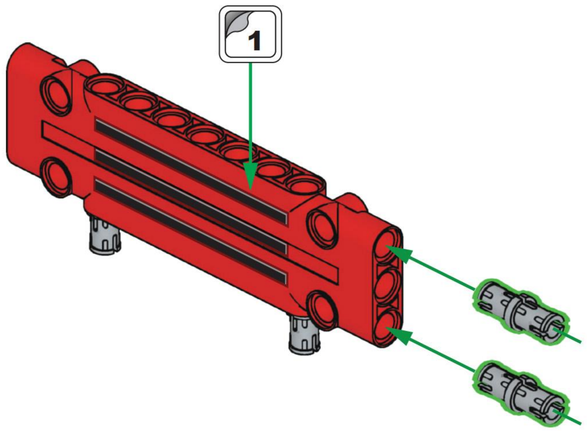

x4

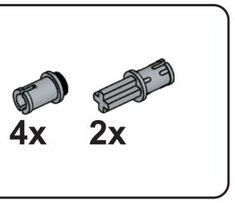

M21

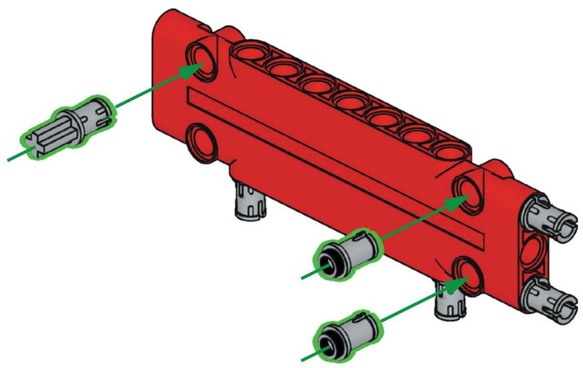

x2

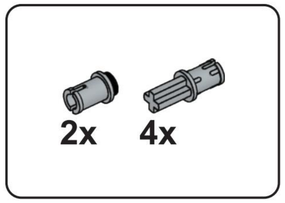

M22

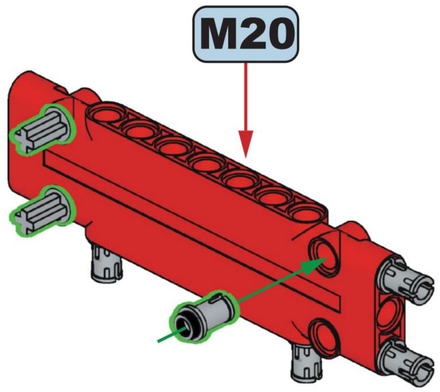

x2

M23

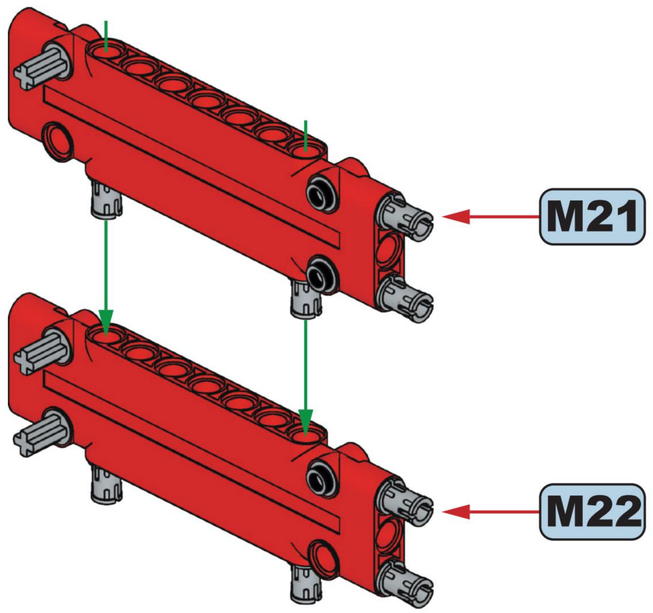

x2

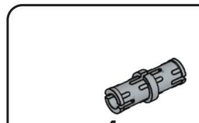



M25

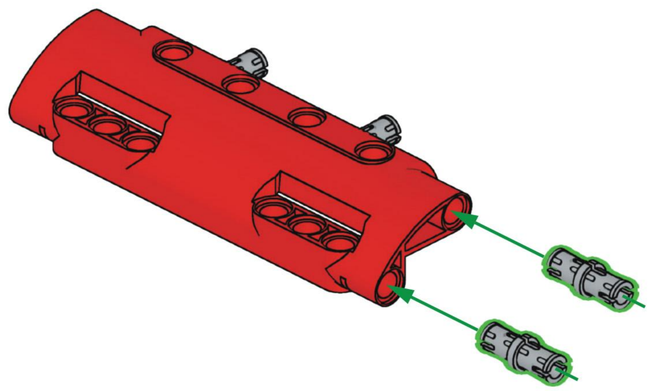

x2

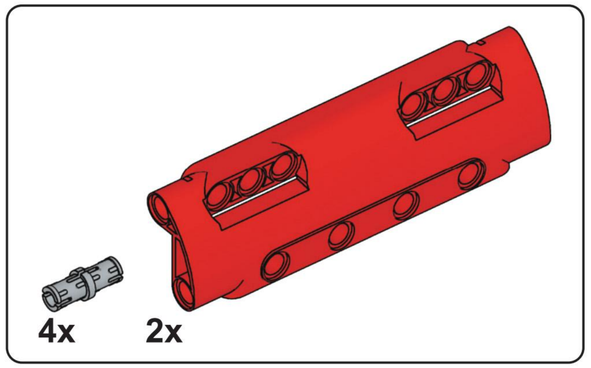

M24

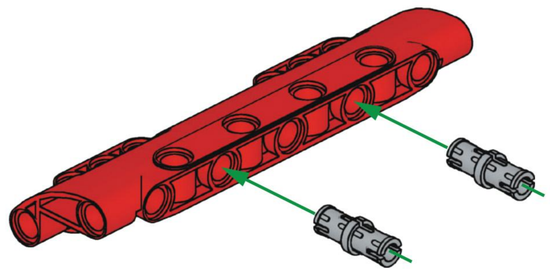

x2

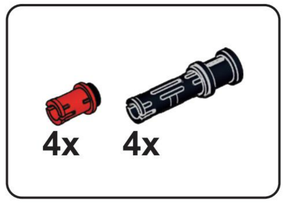

M26

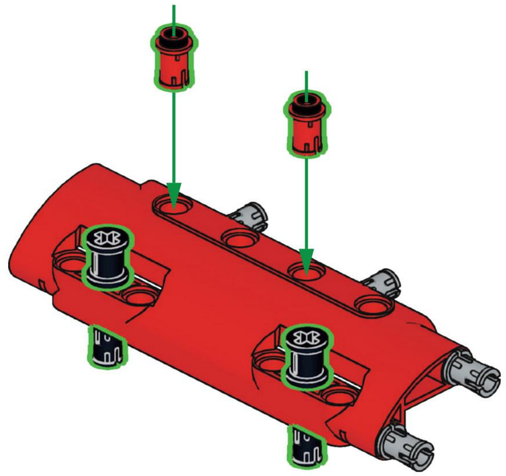

x2

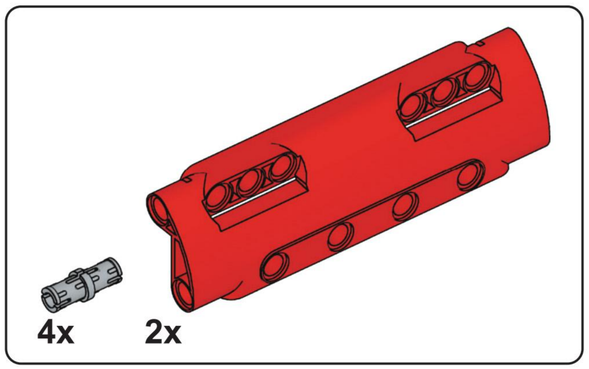

M27

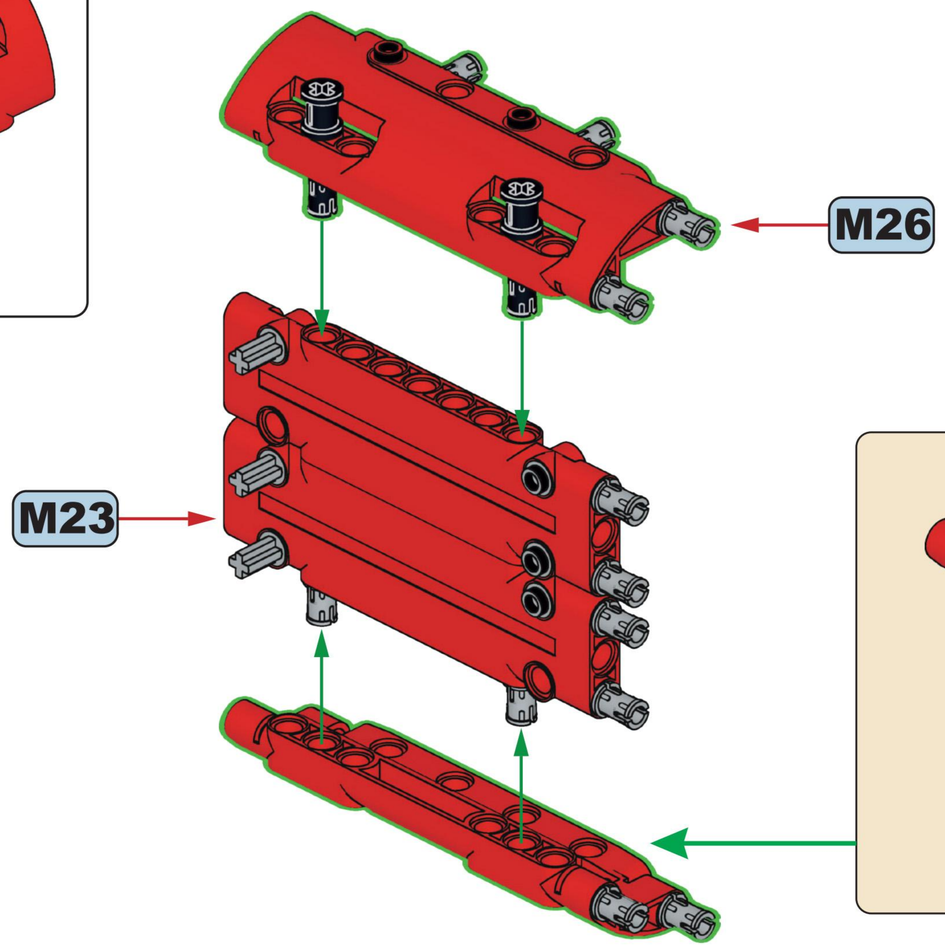

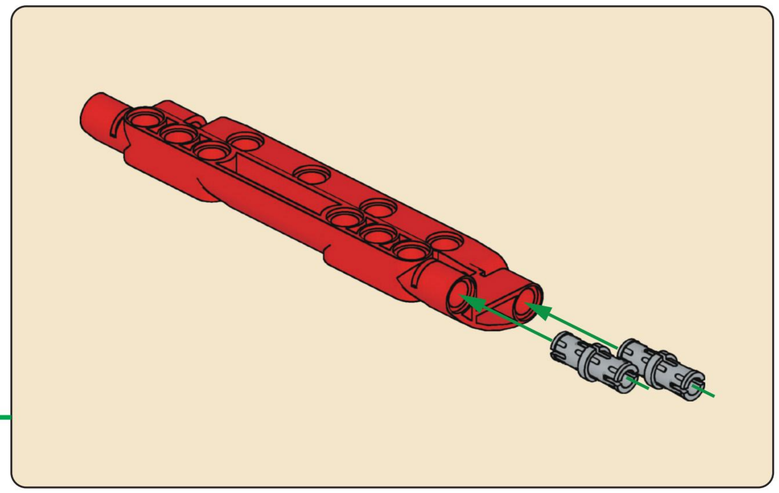

x2

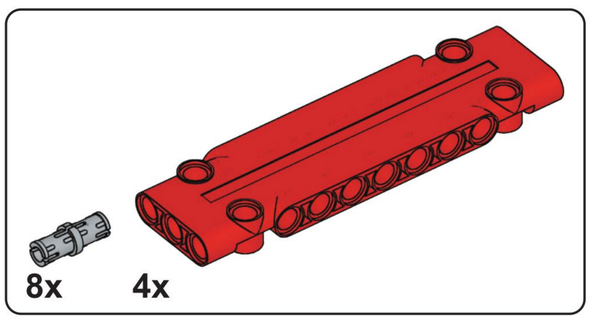

M28

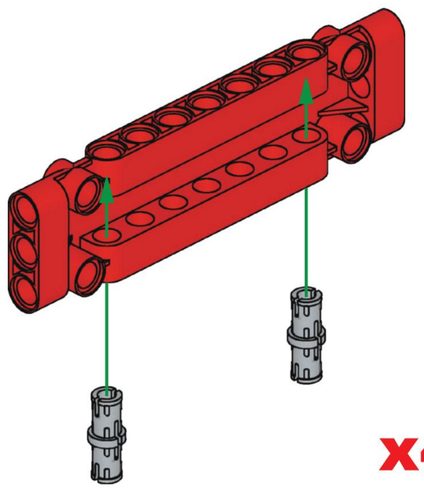

x4

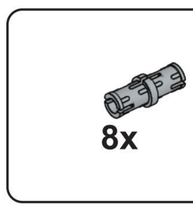

M29

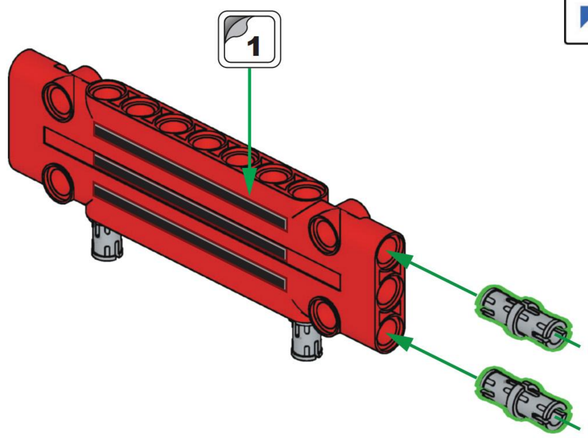

x4

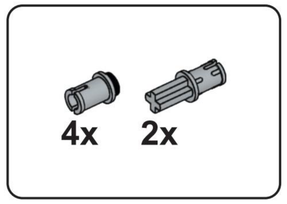

M30

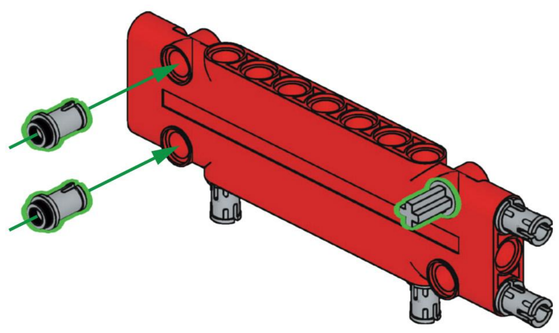

x2

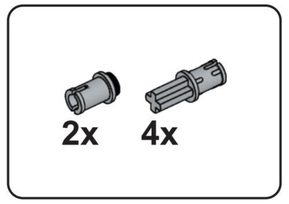

M31

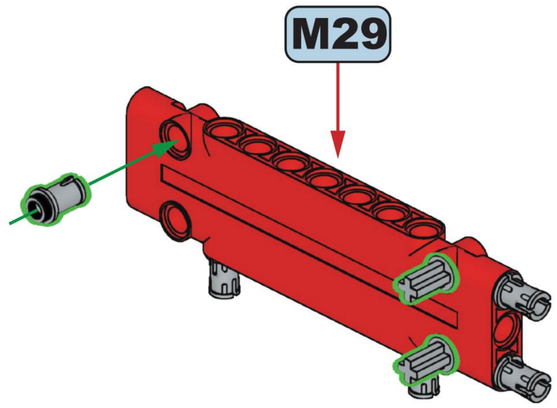

x2

M32

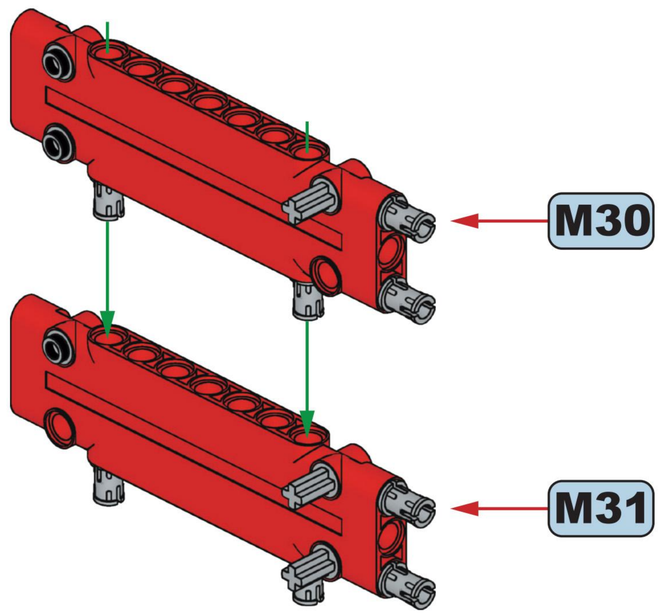

x2

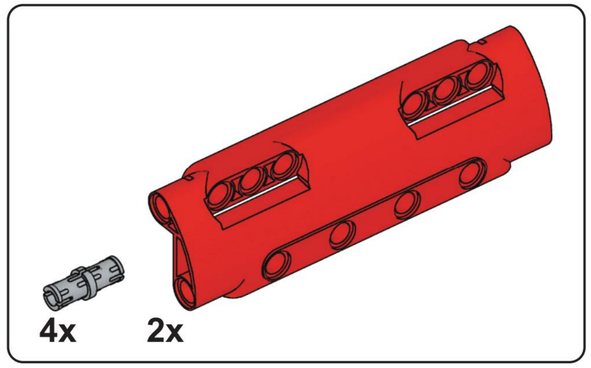

M33

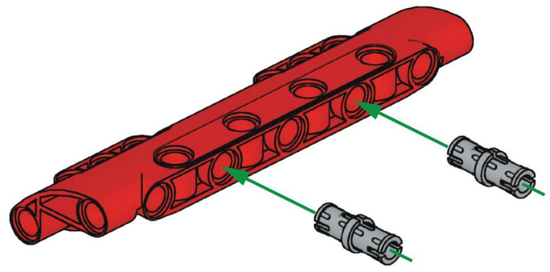

x2

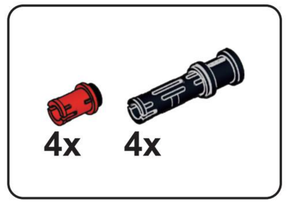

M34

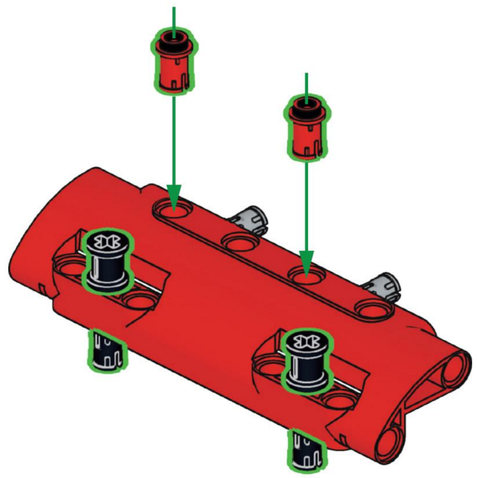

x2

M35

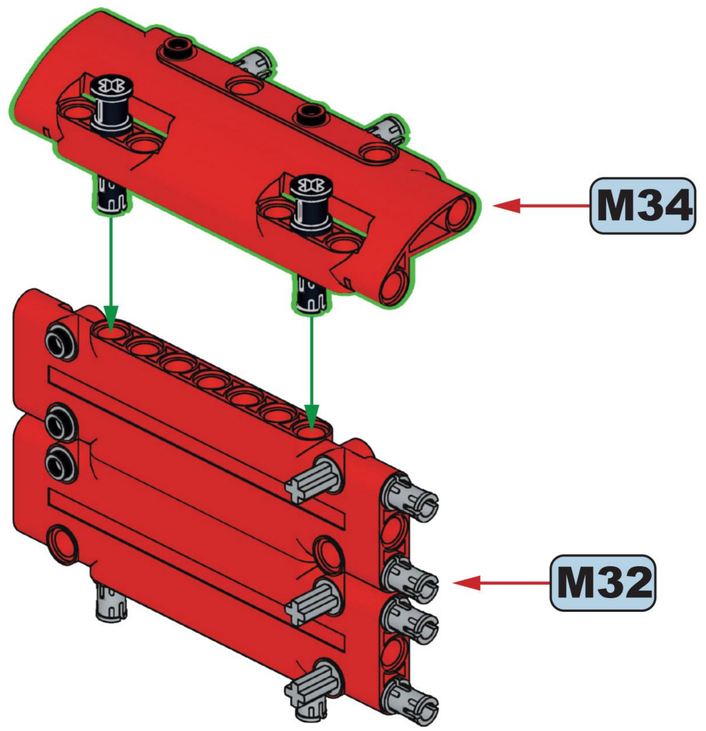

x2

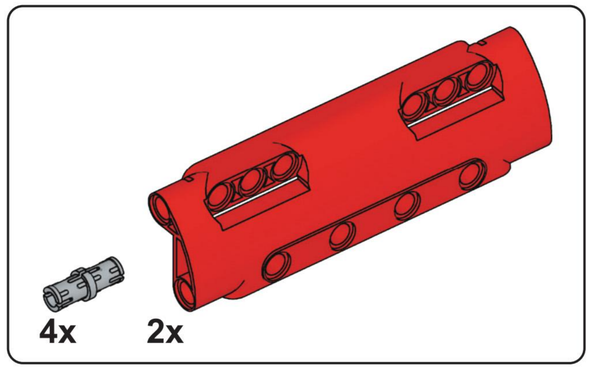

M36

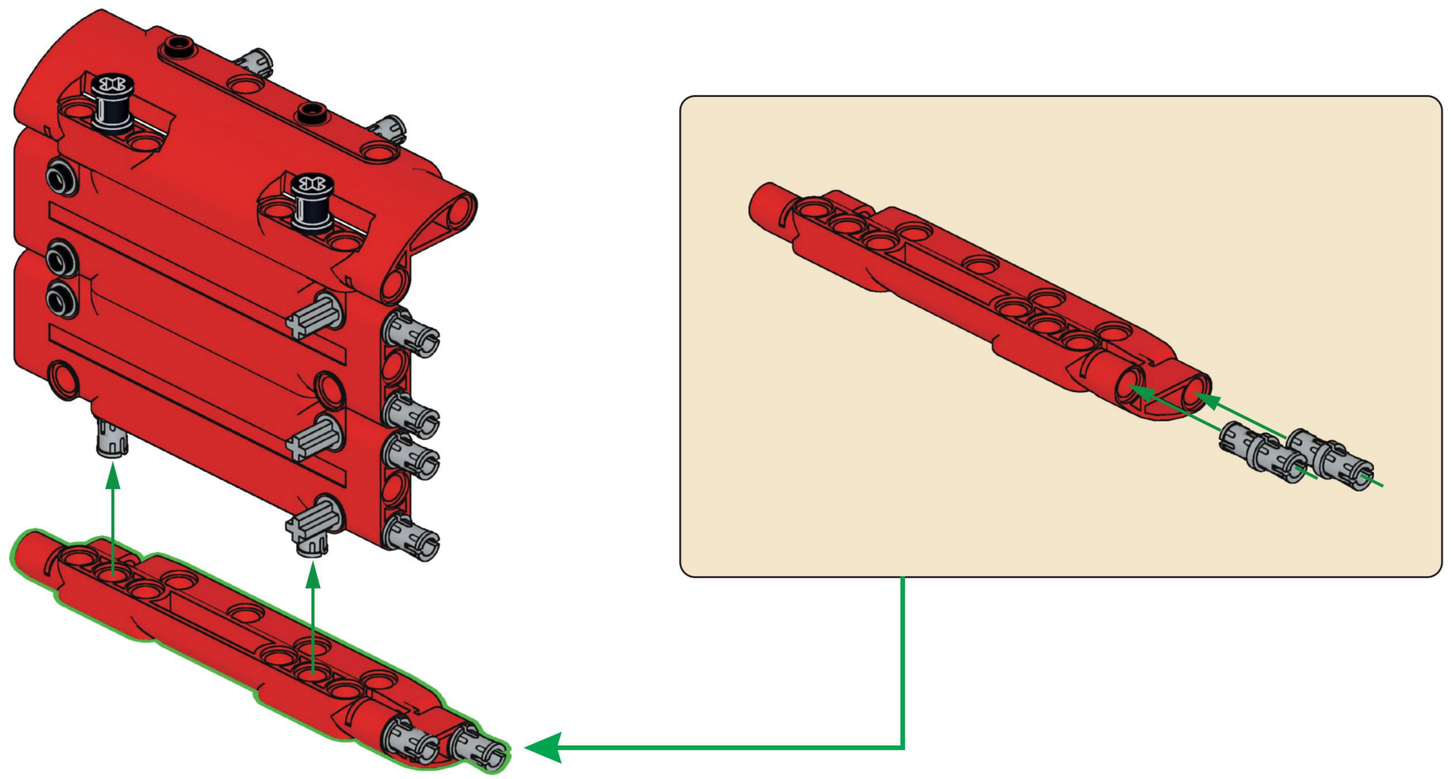

x2

M37

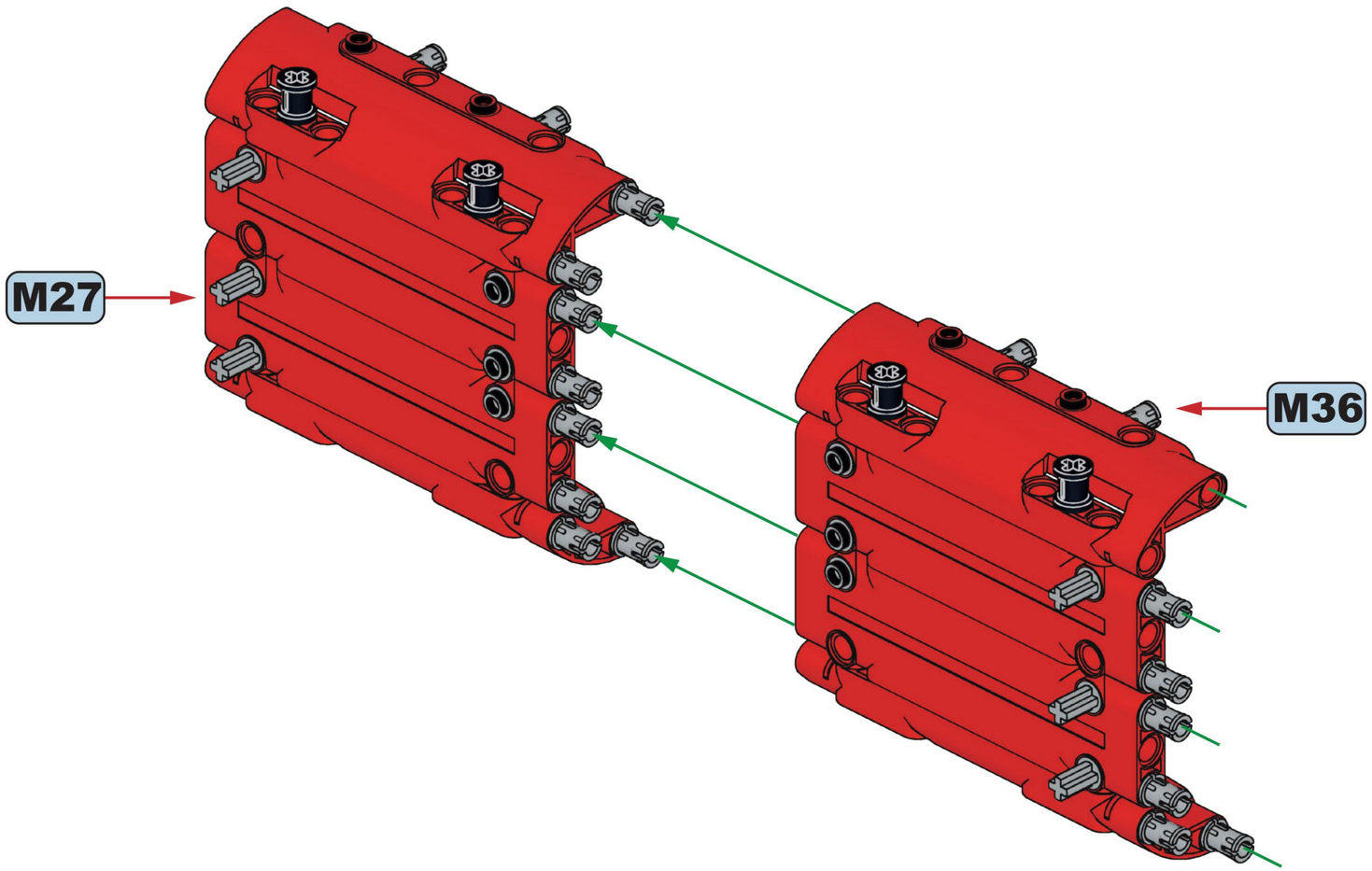

x2

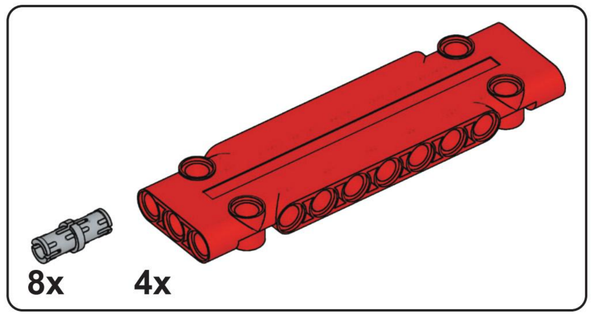

M38

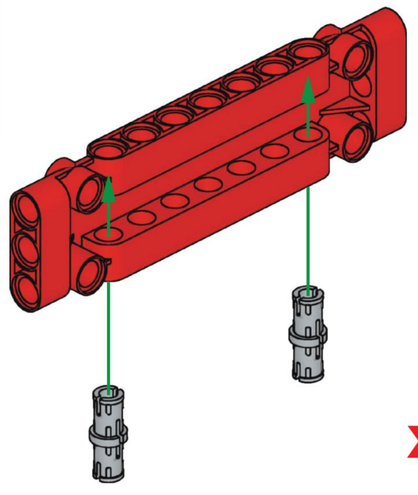

x4

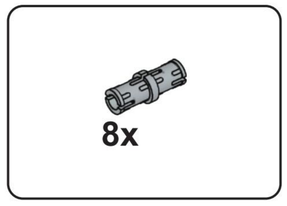

M39

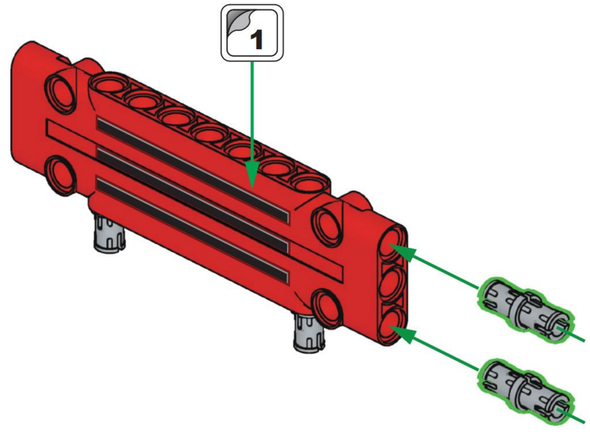

x4

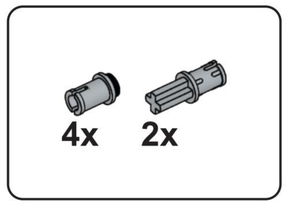

M40

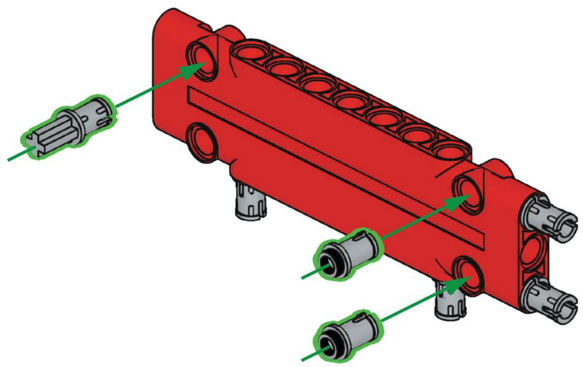

x2

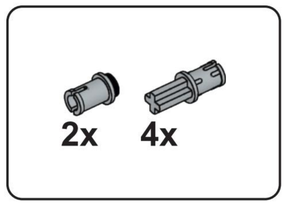

M41

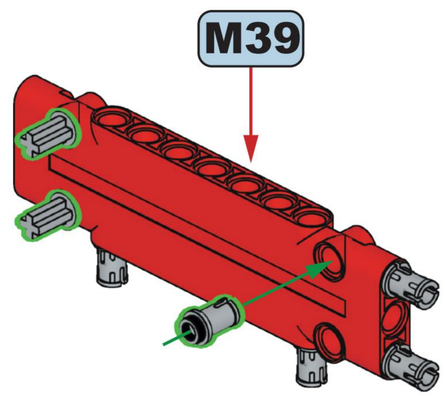

x2

M42

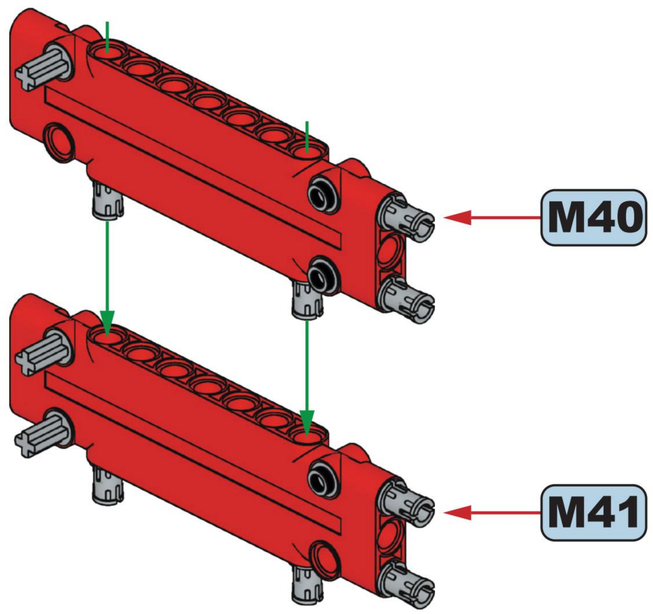

x2

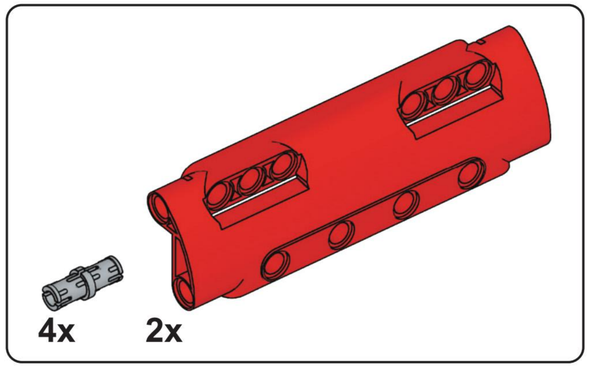

M43

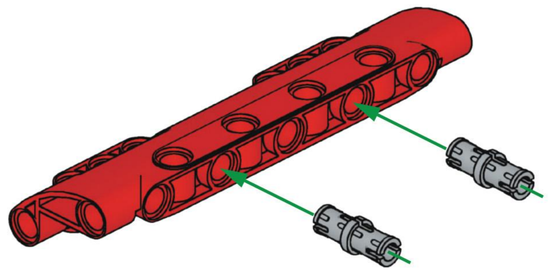

x2

4x

M44

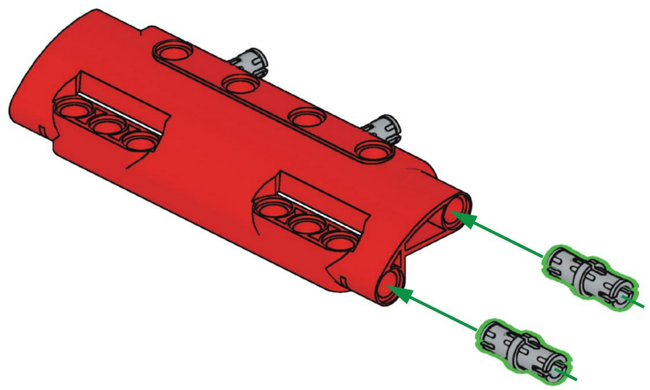

x2

4x 4x

M45

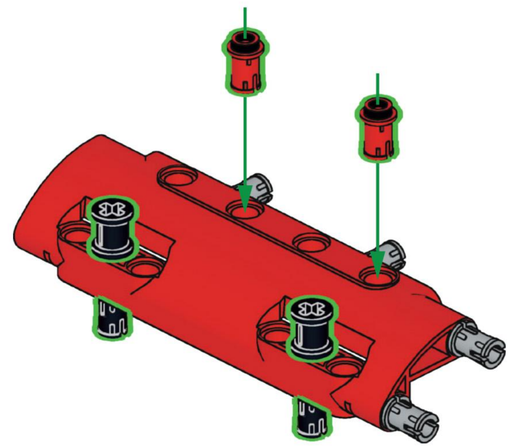

x2

M46

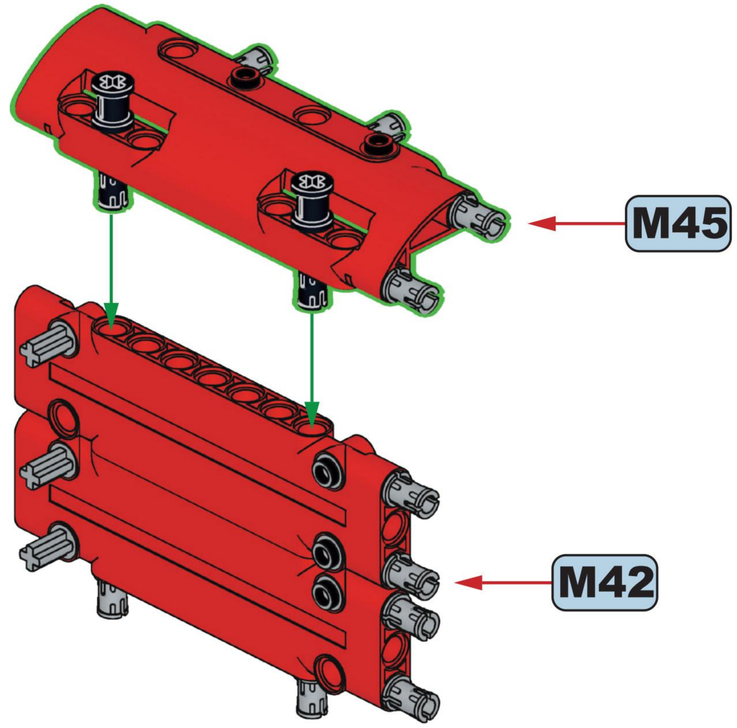

x2

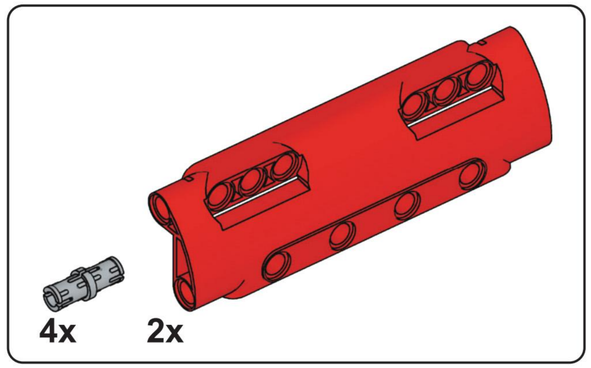

M47

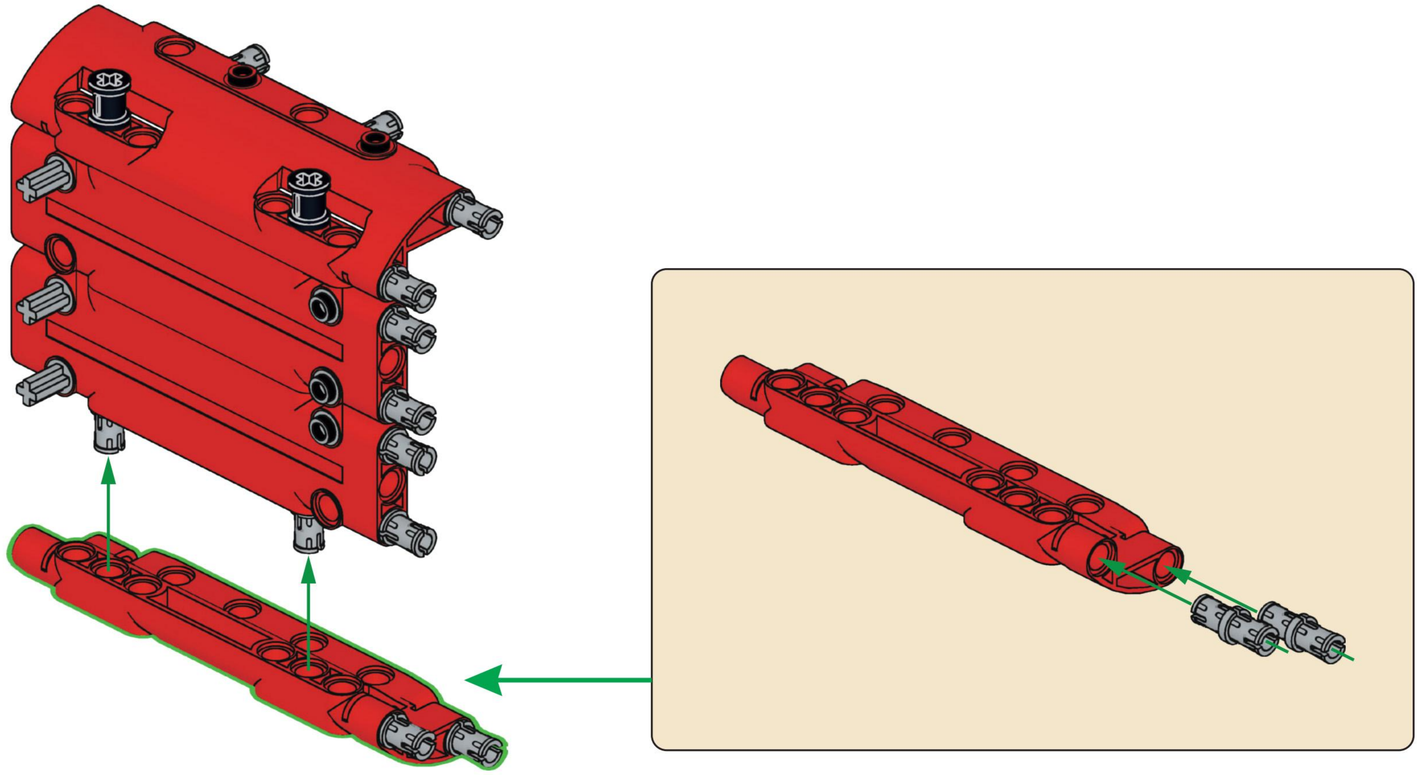

x2

M48

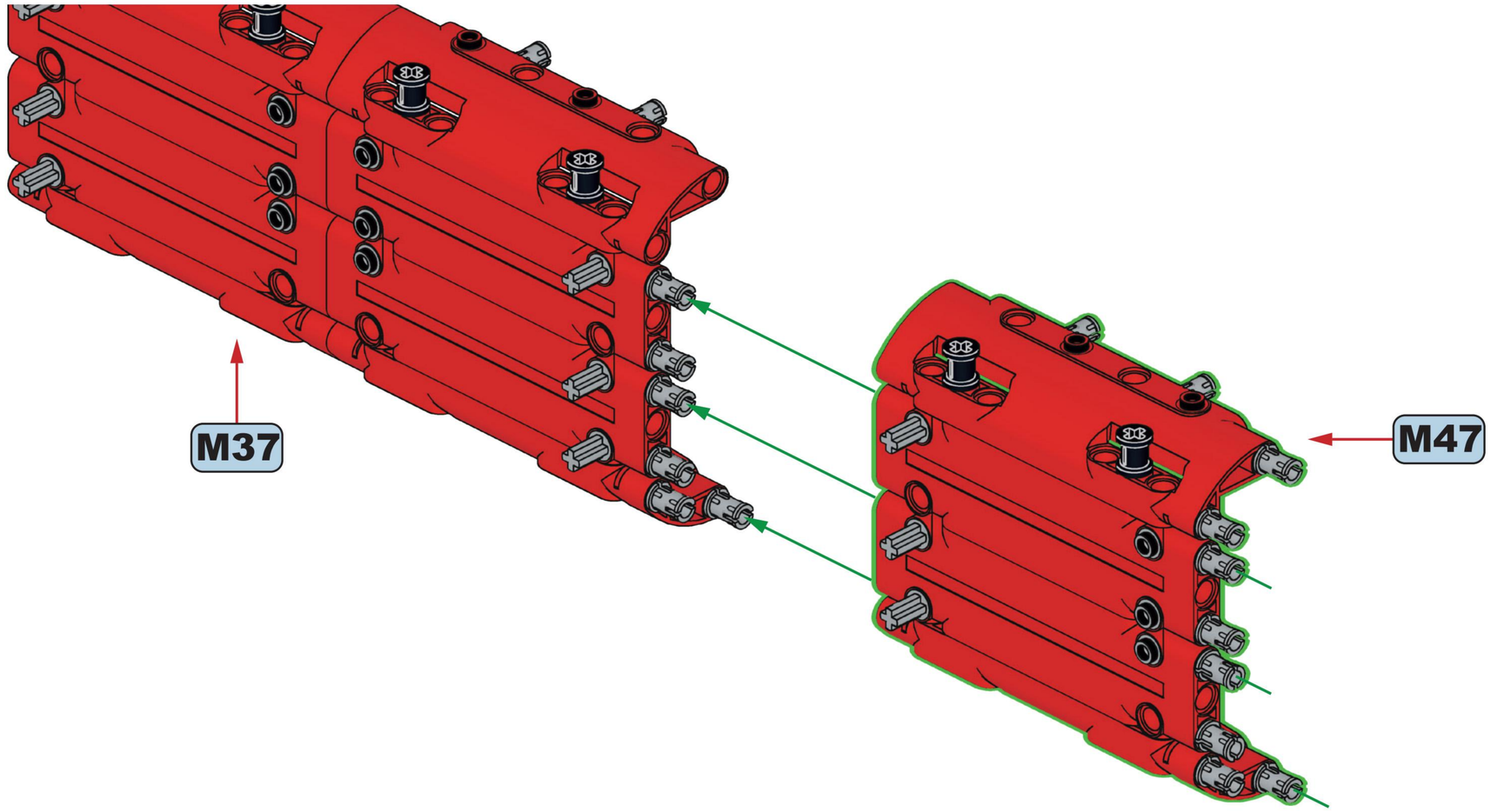

x2

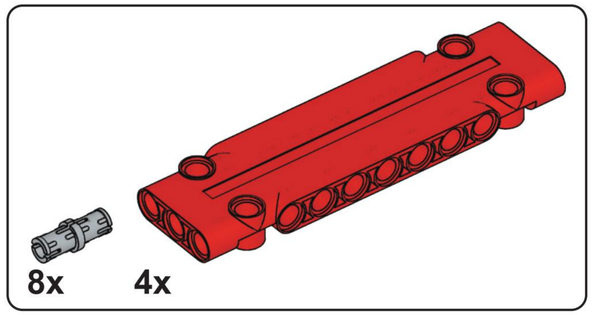

M49

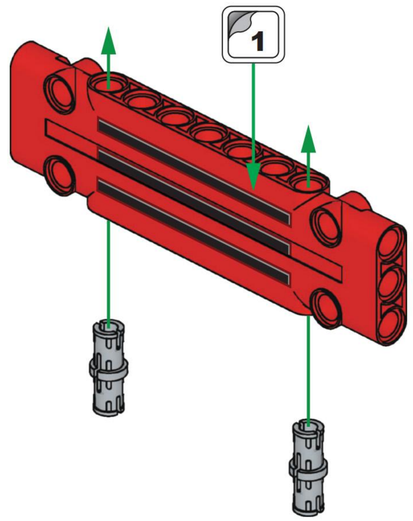

x4

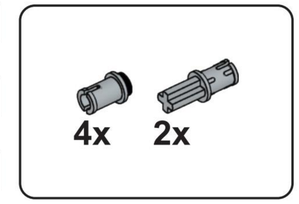

M50

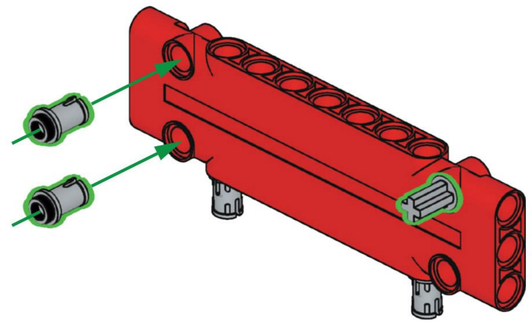

x2

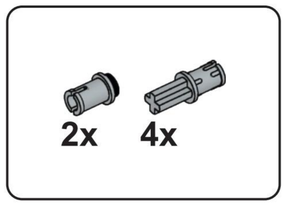

M51

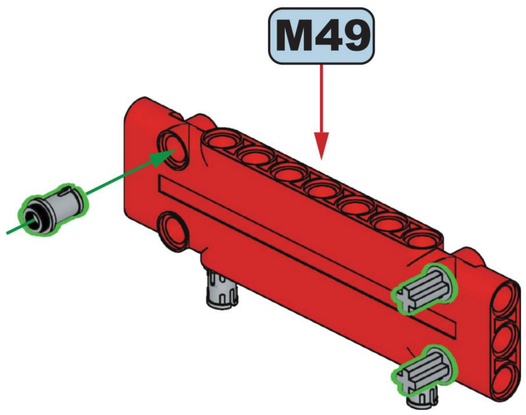

x2

M52

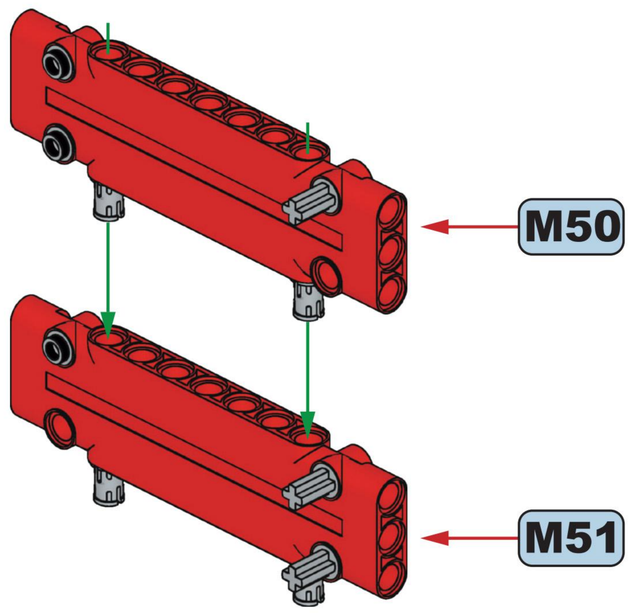

x2

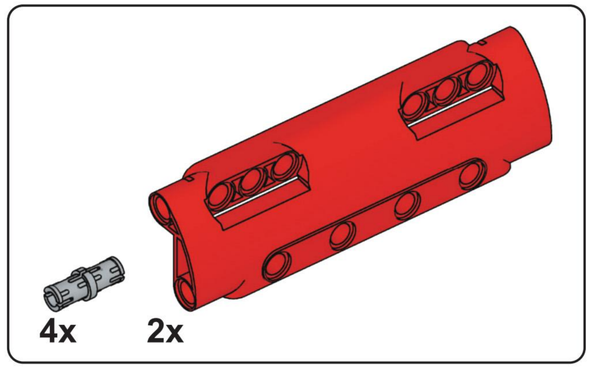

M53

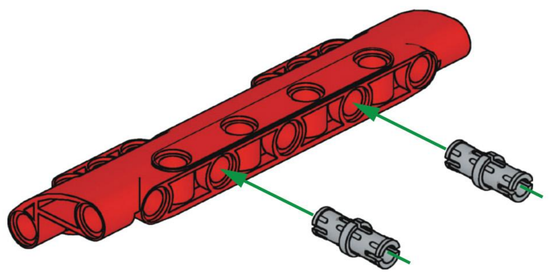

x2

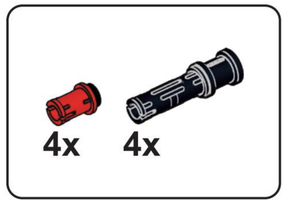

M54

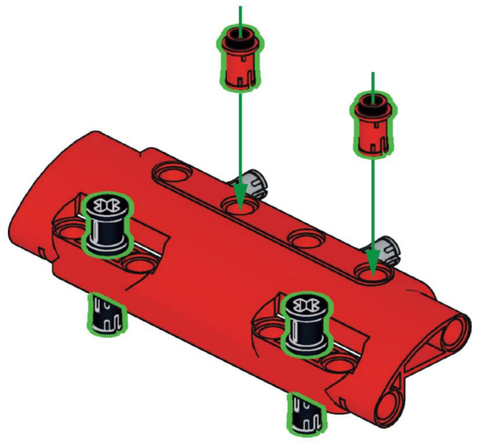

x2

M55

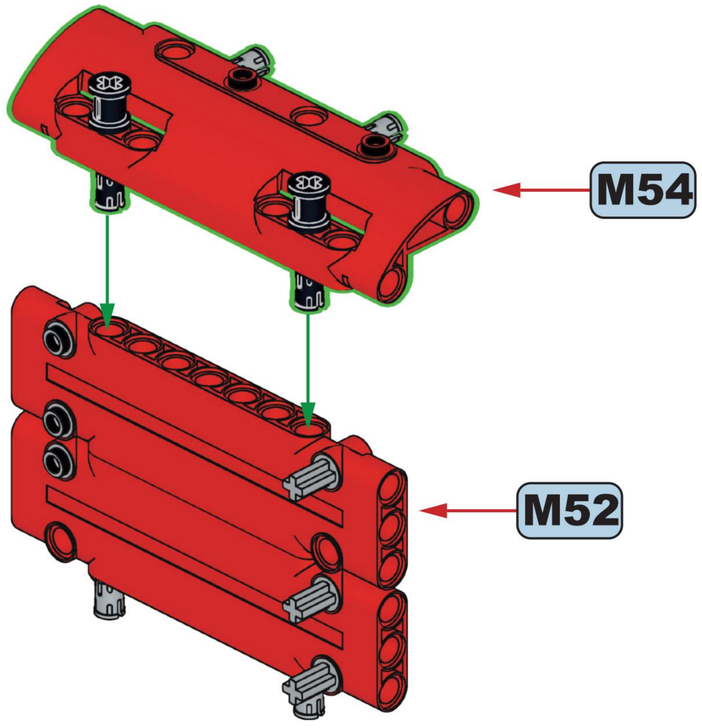

x2

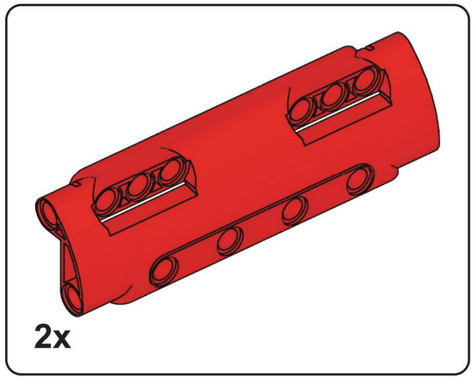

M56

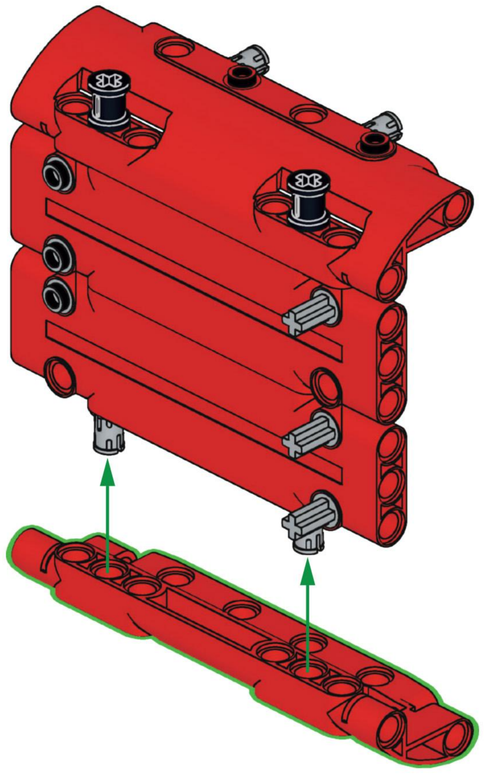

x2

M57

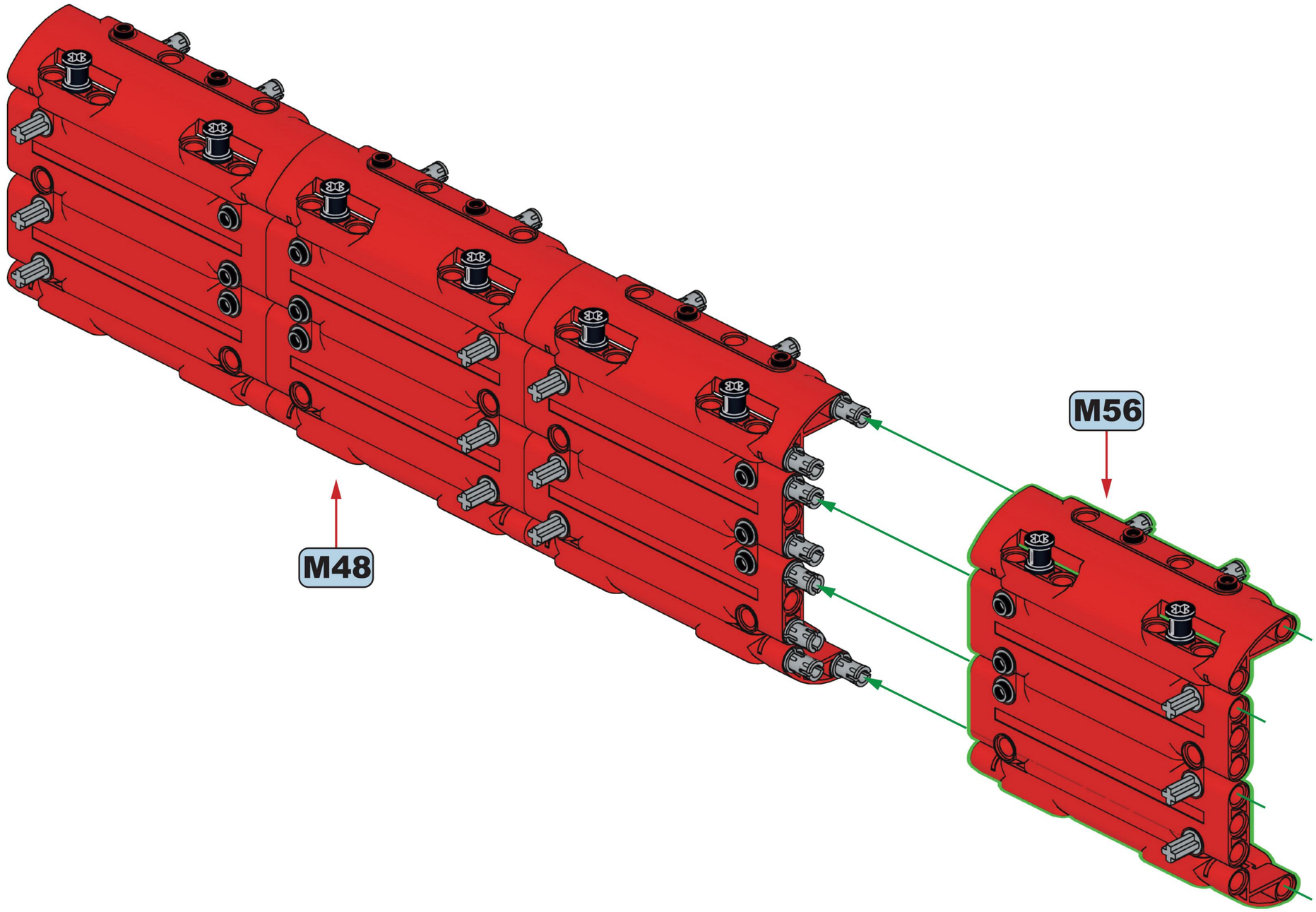

x2

M58

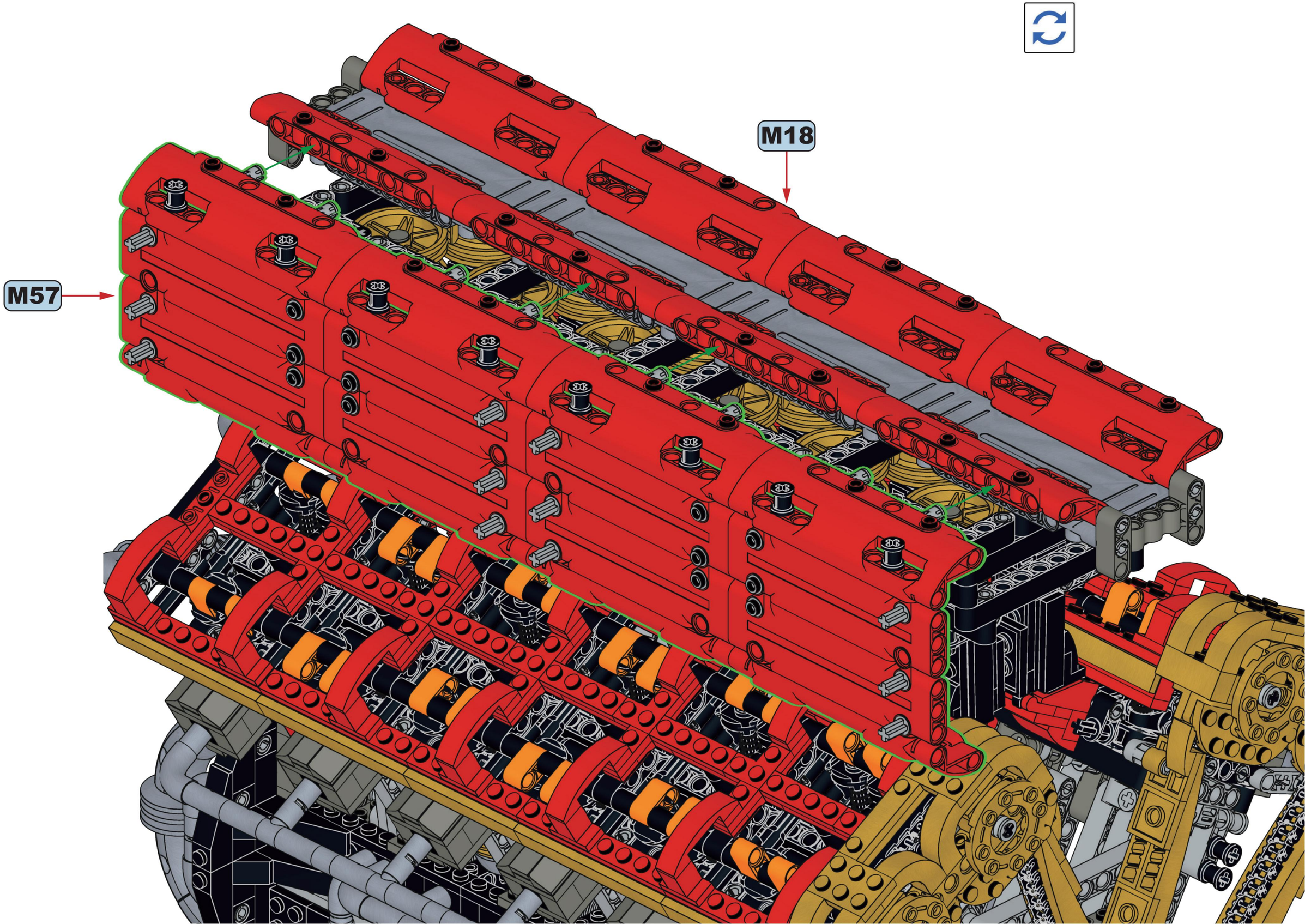

M59

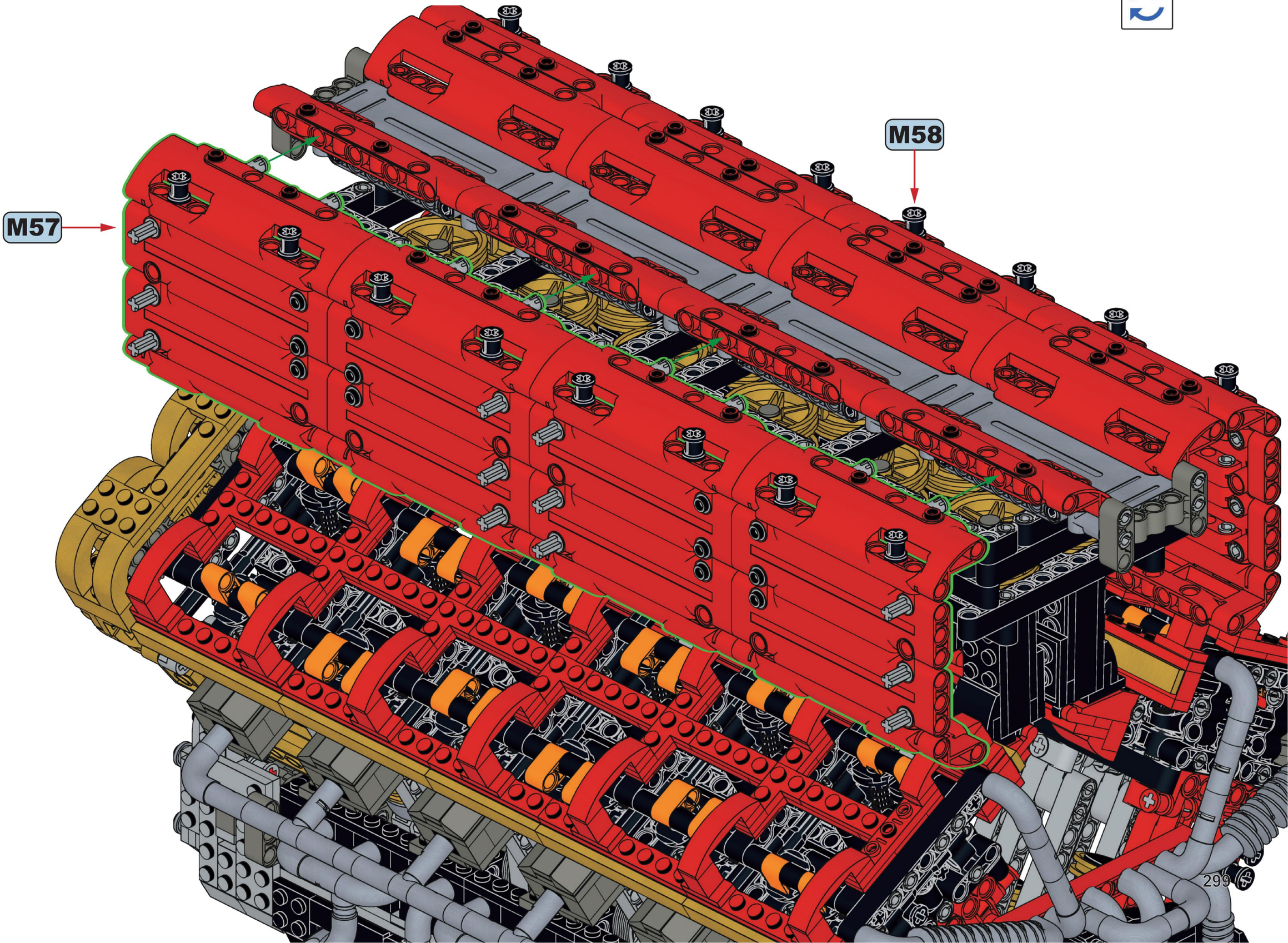

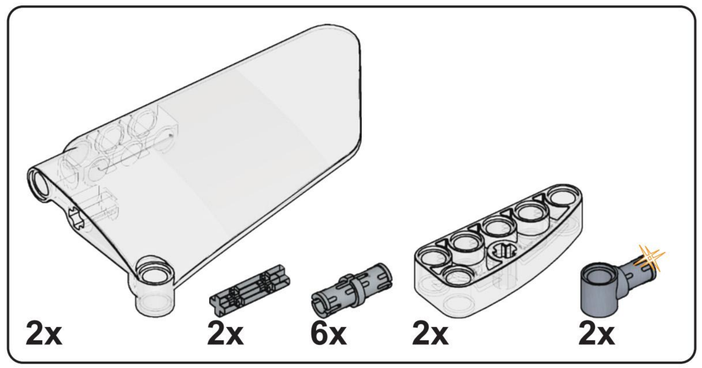

M60

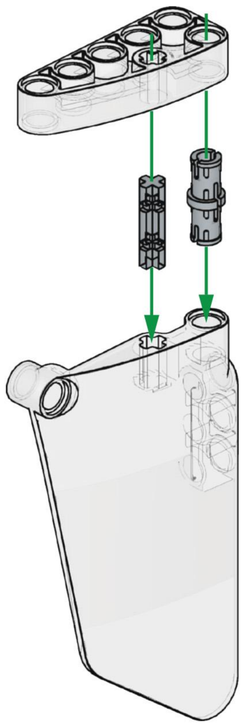

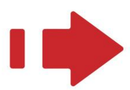

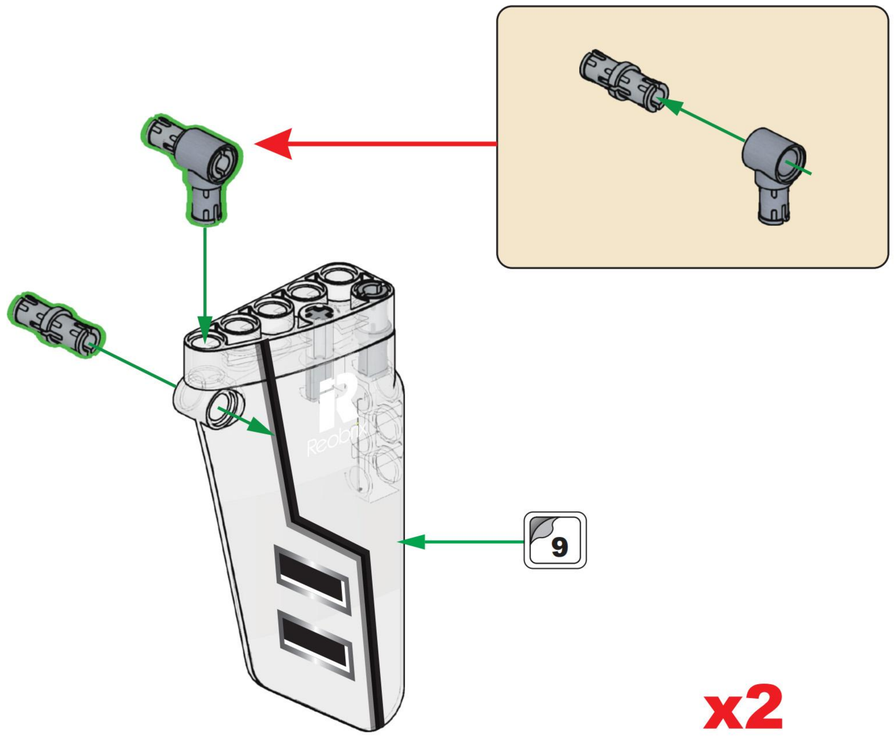

x2

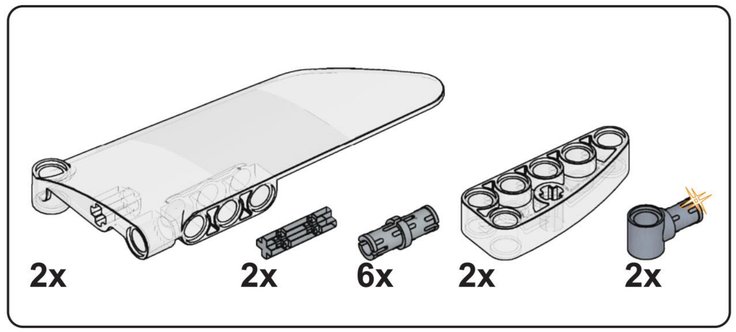

M61

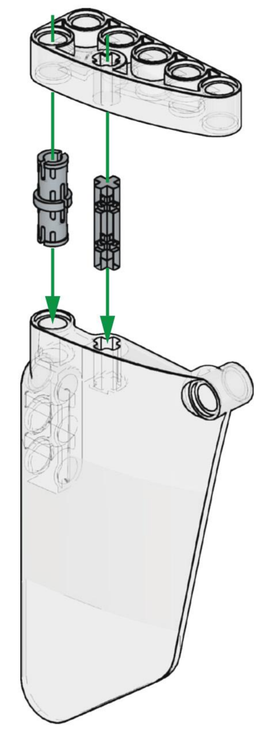

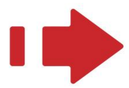

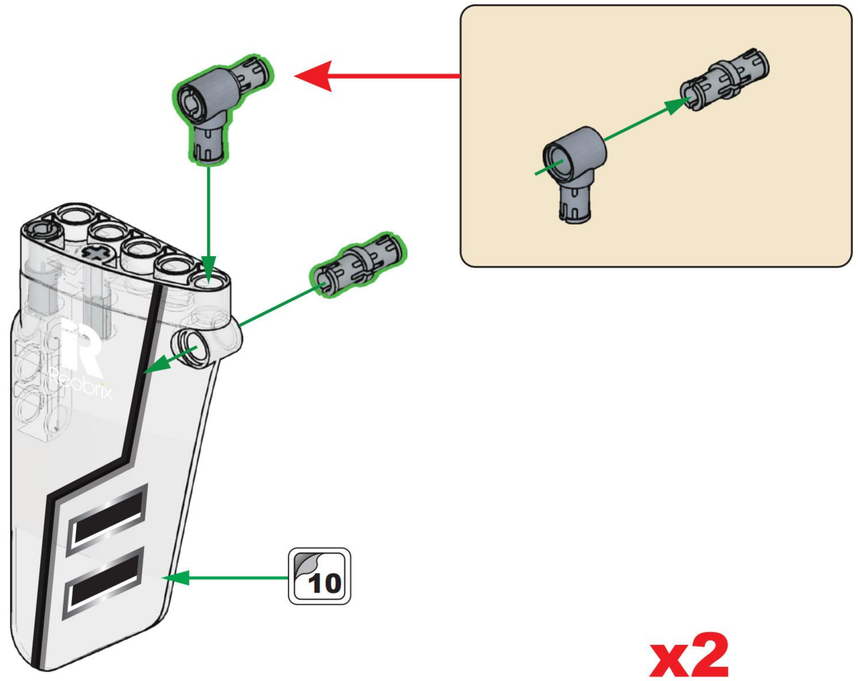

x2

M62

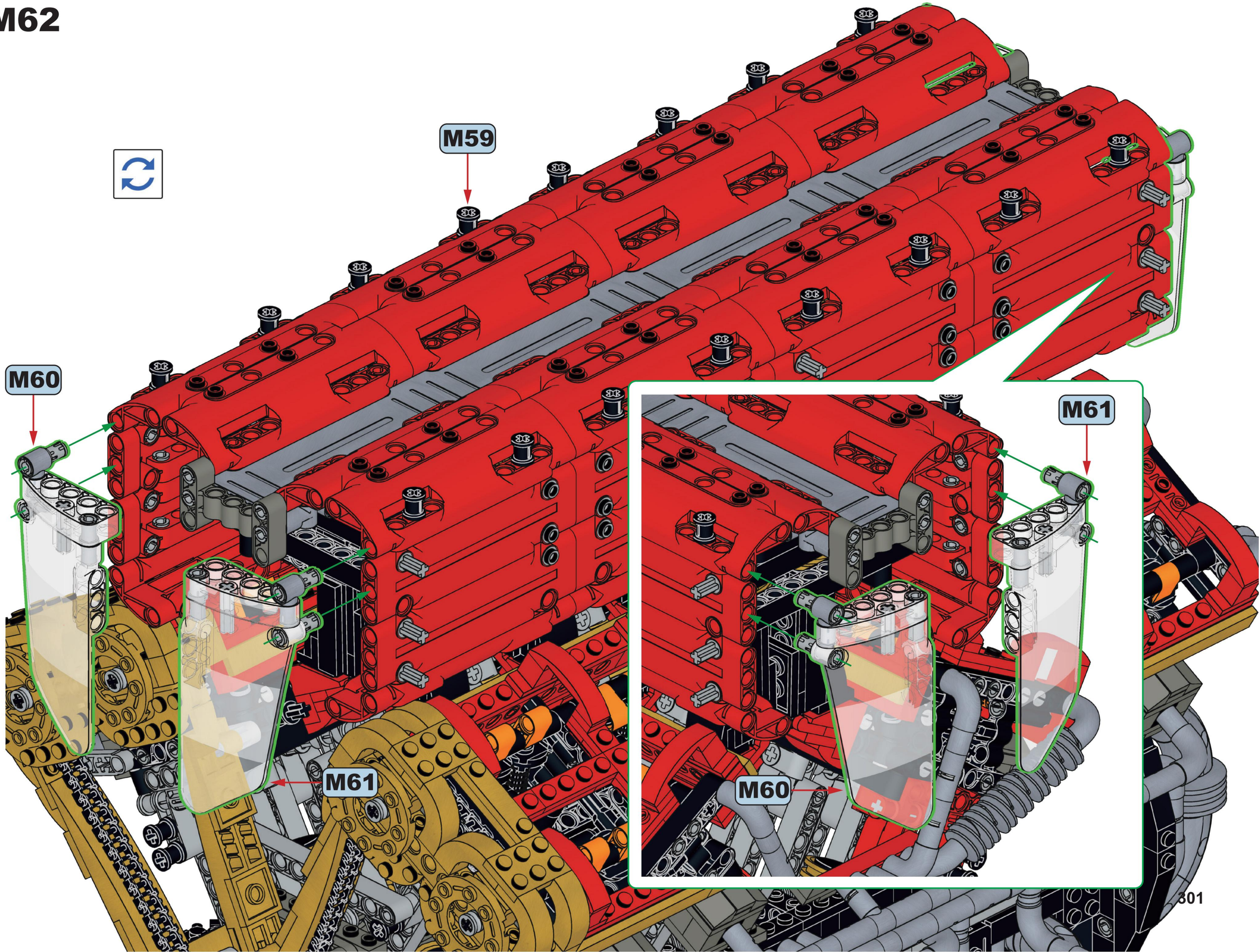

14

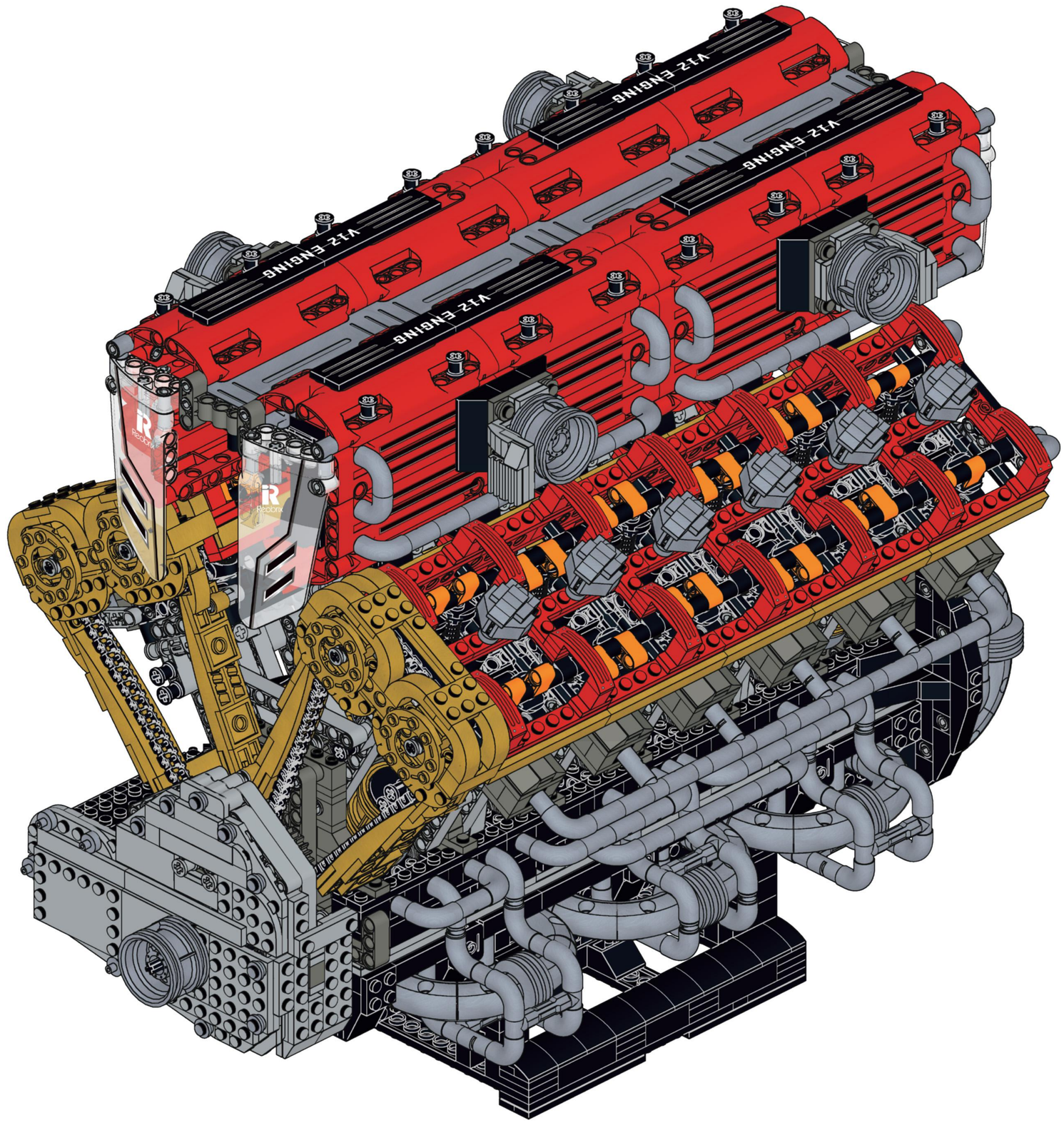

N

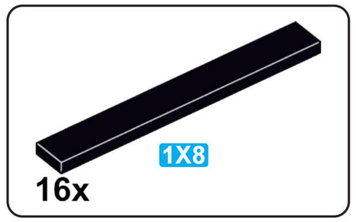

N1

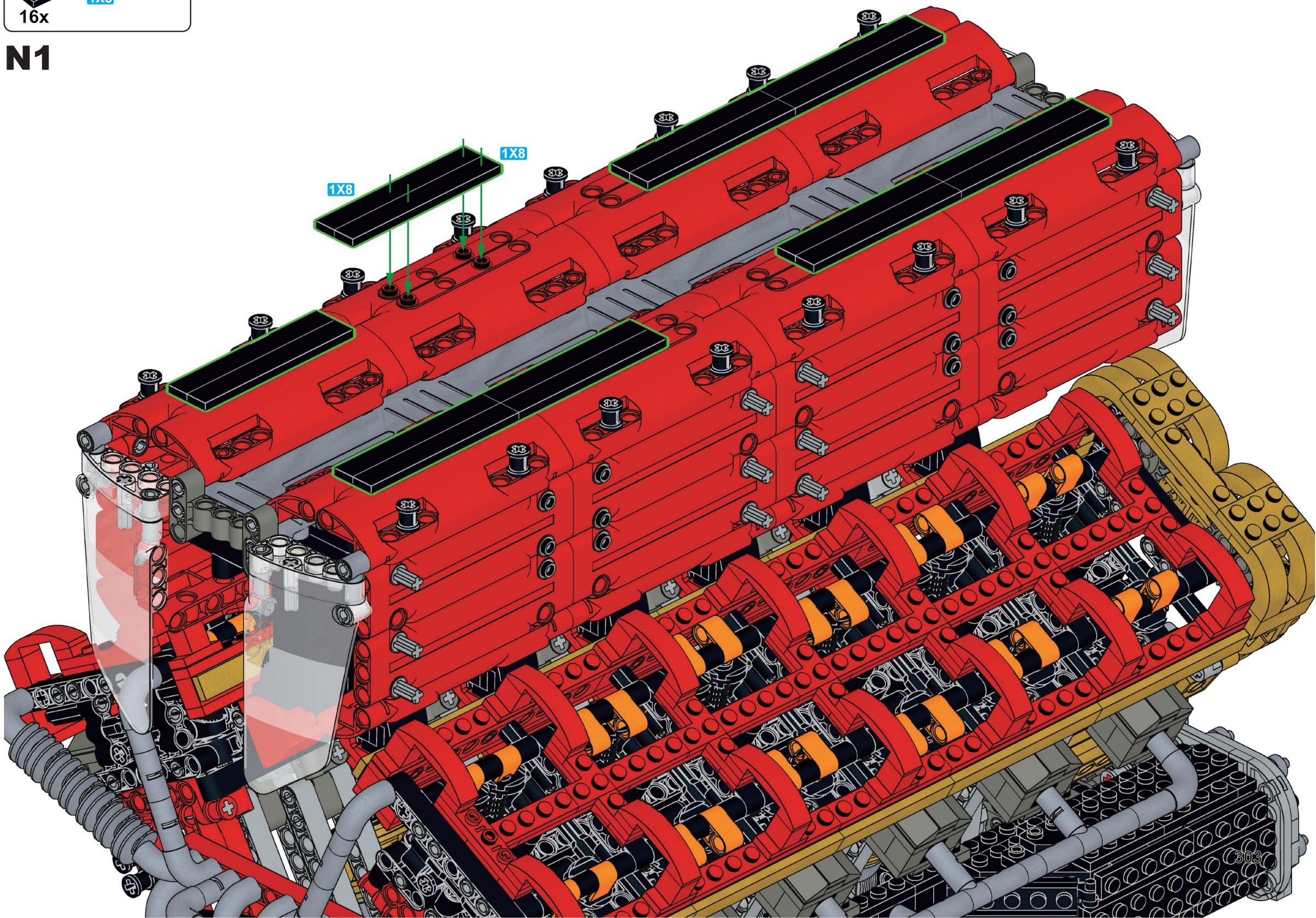

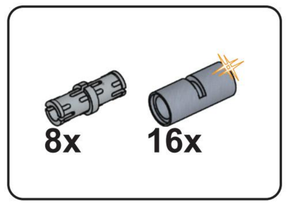

N2

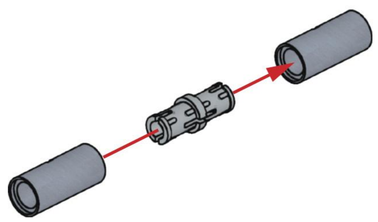

x8

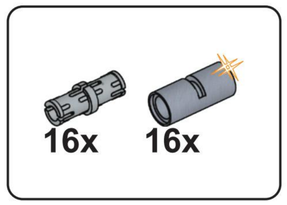

N3

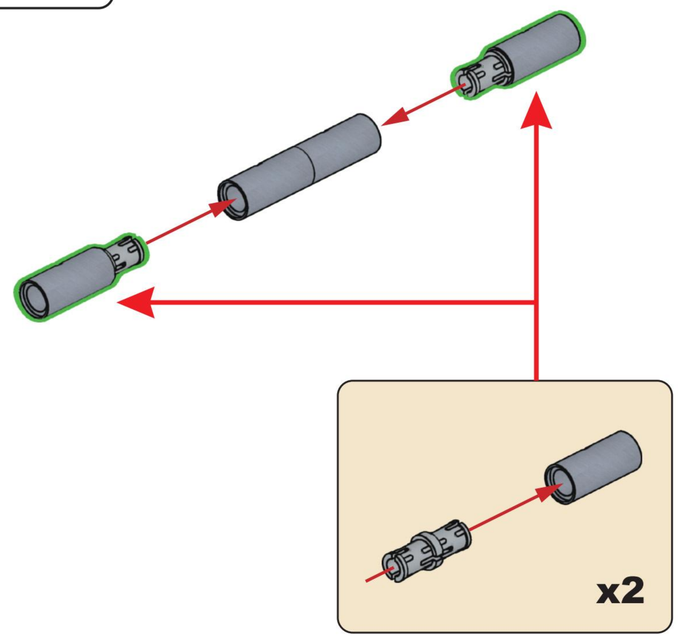

x8

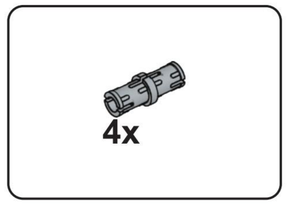

N4

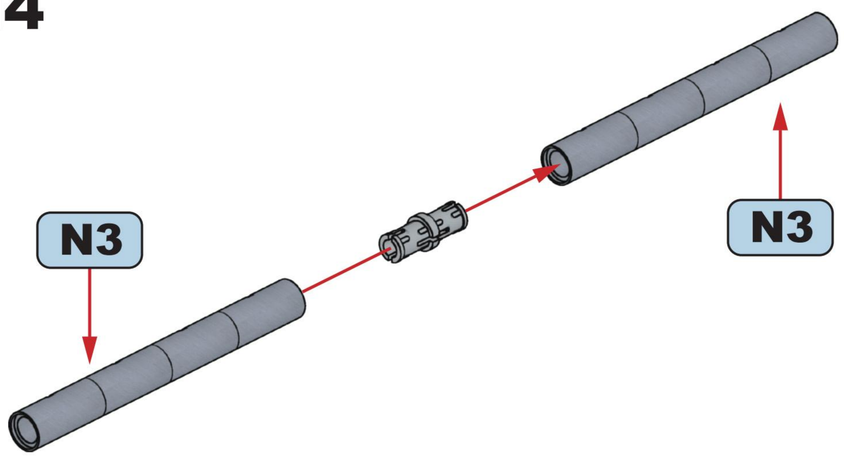

x4

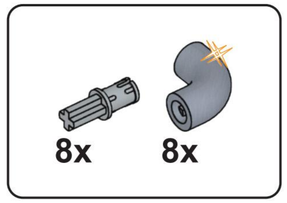

N5

x4

N6

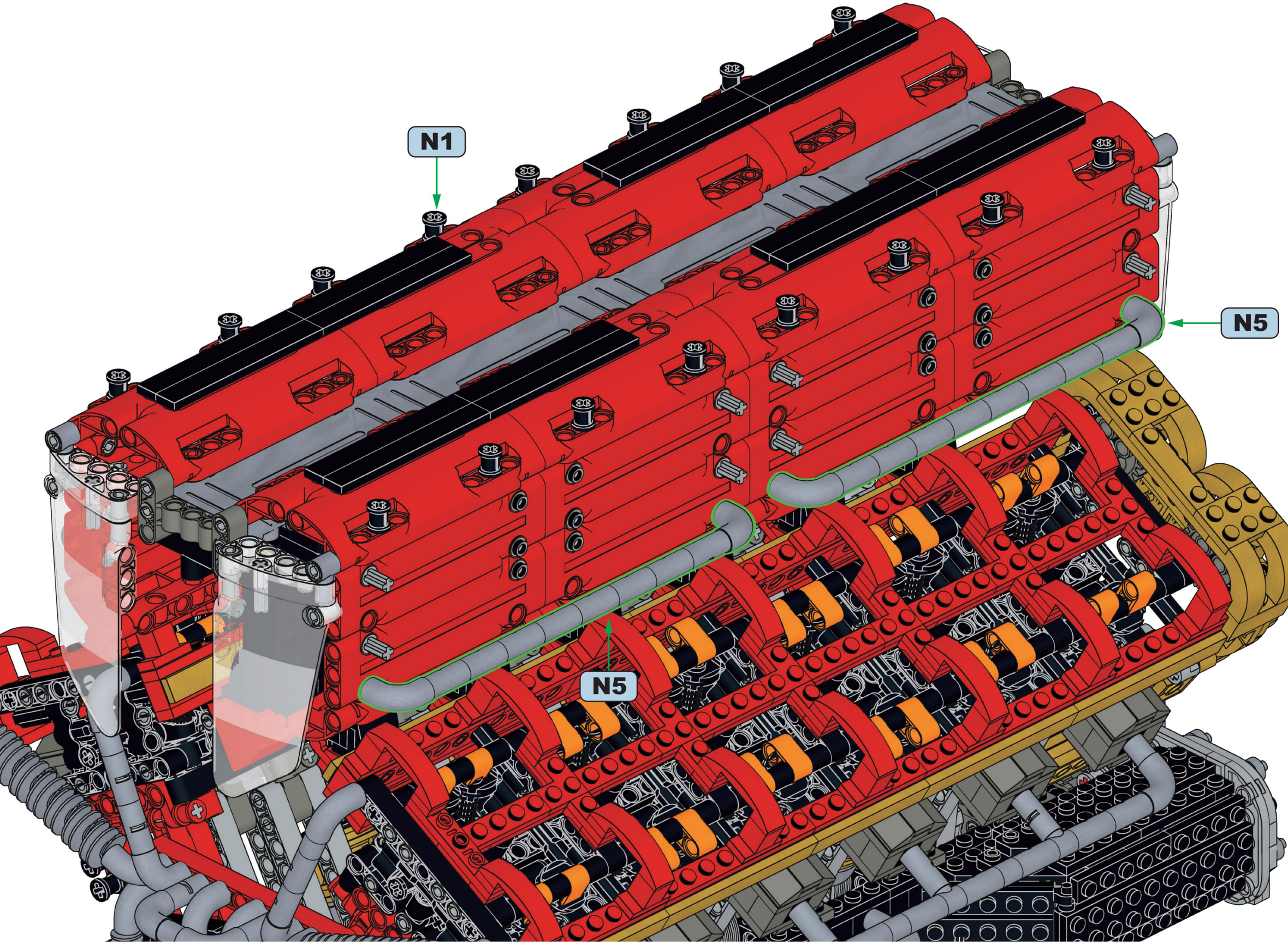

N7

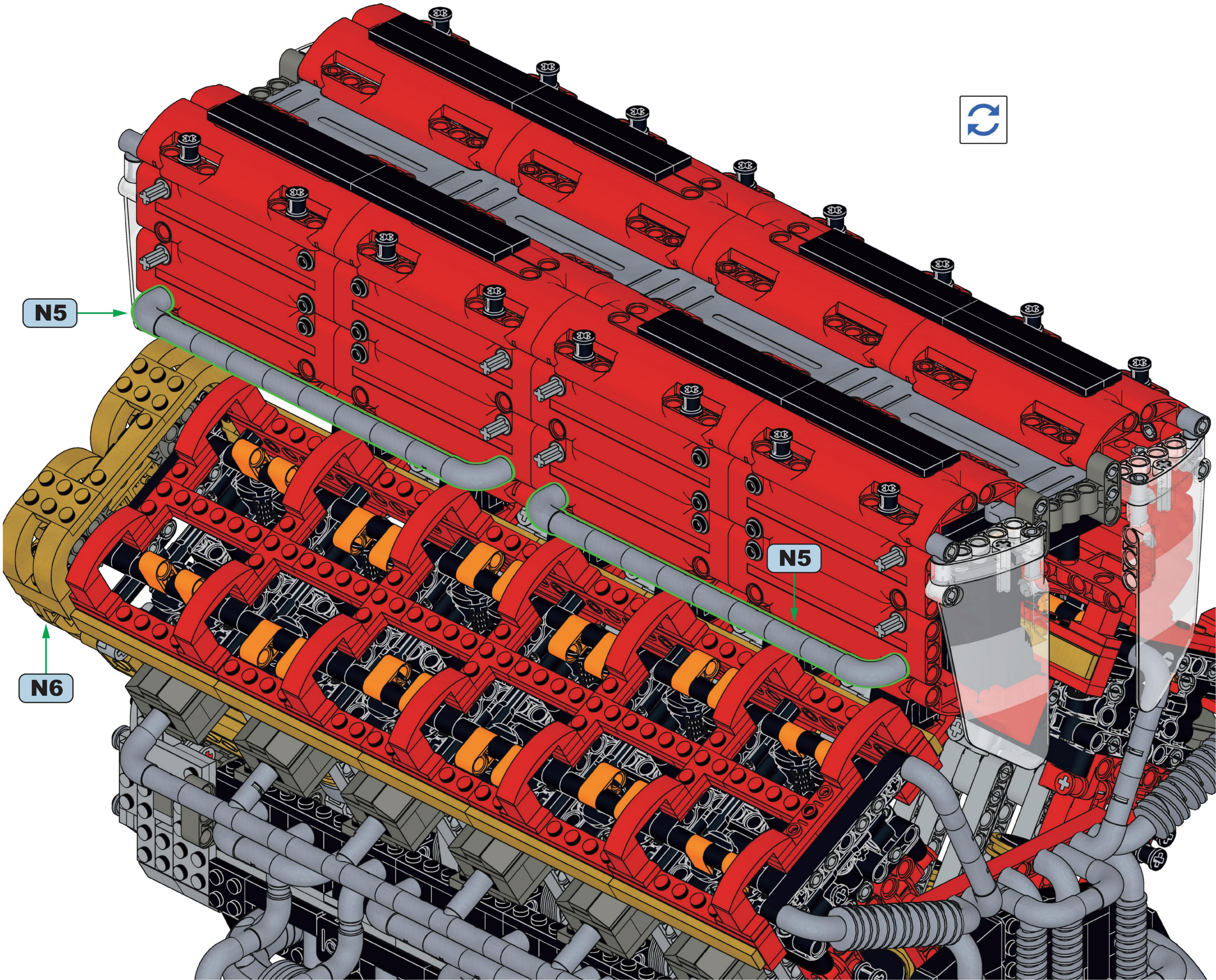

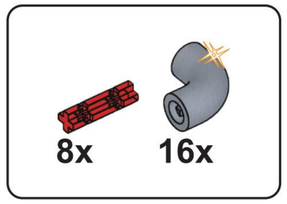

N8

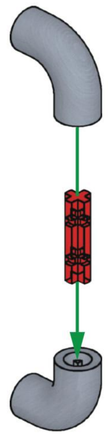

x8

N9

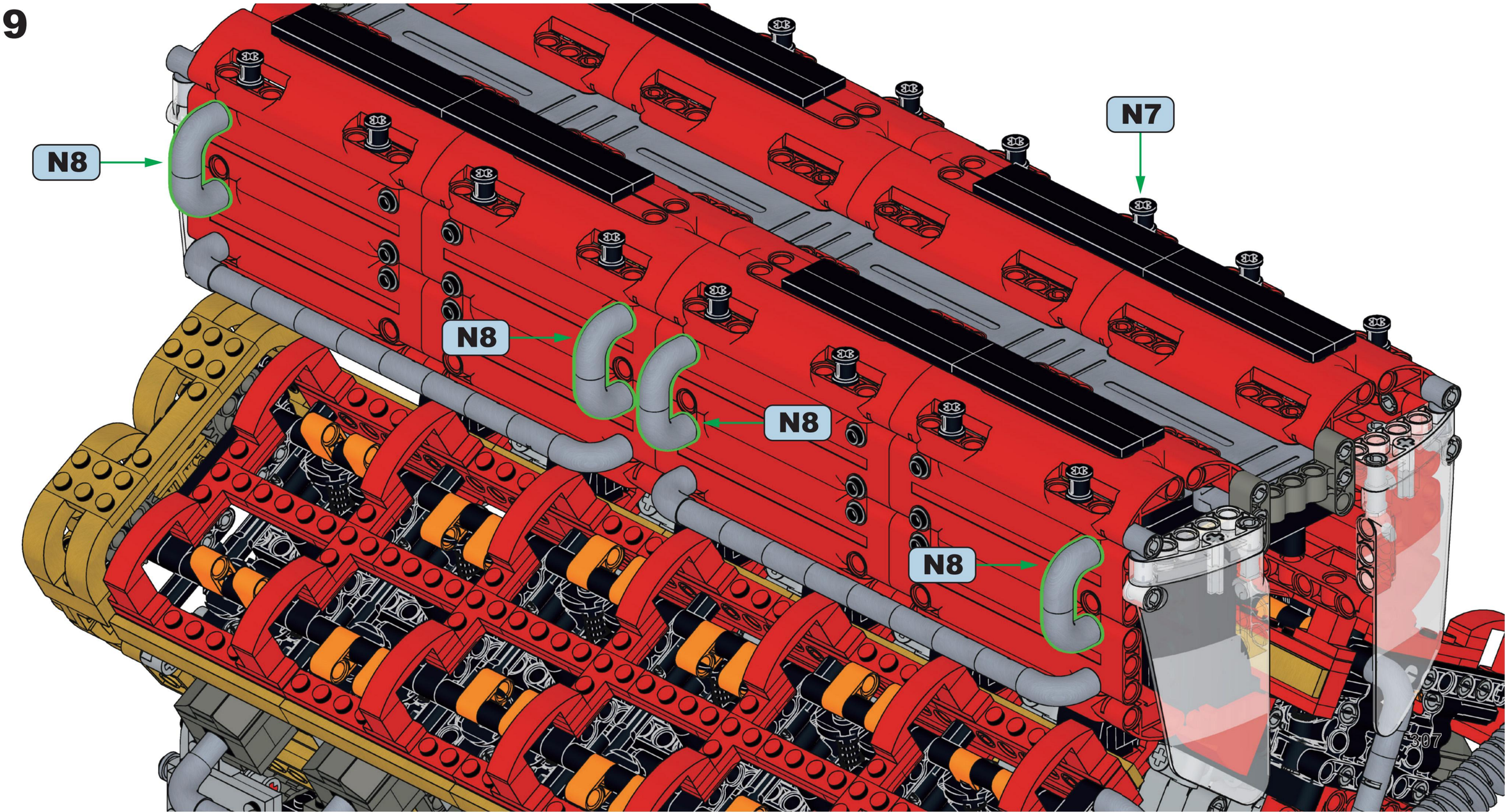

N10

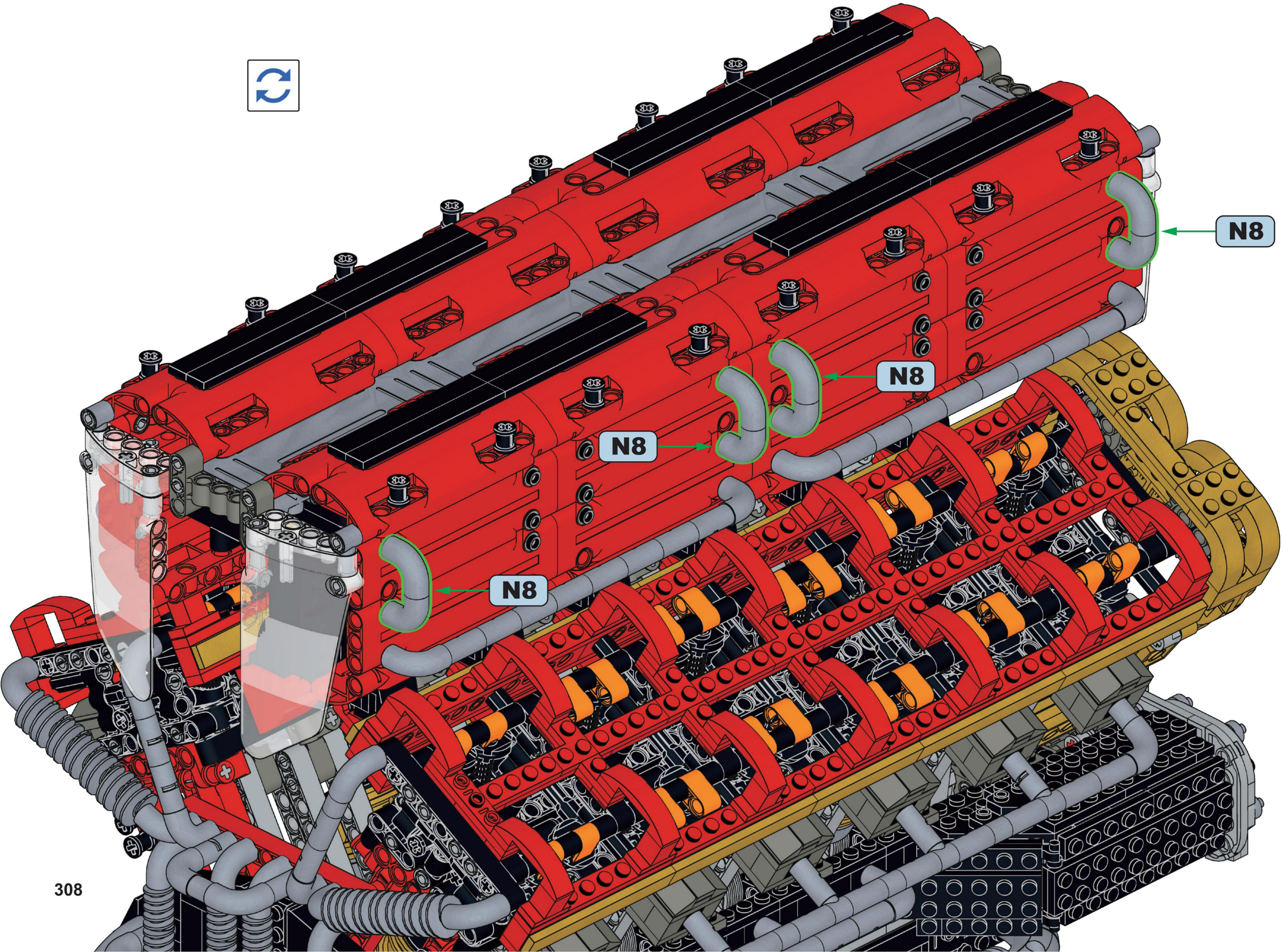

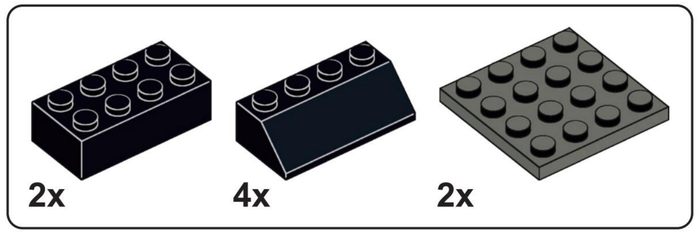

N11

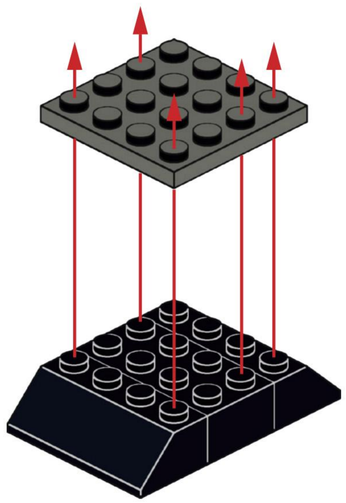

x2

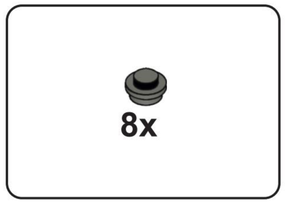

N12

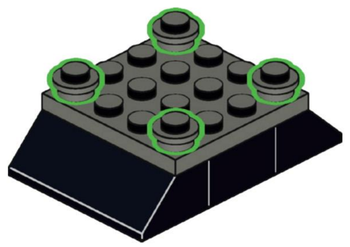

x2

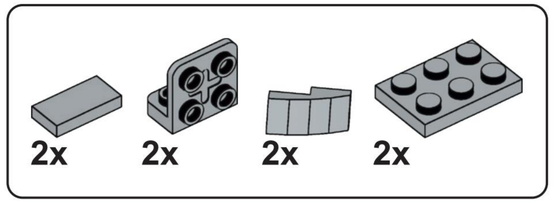

N13

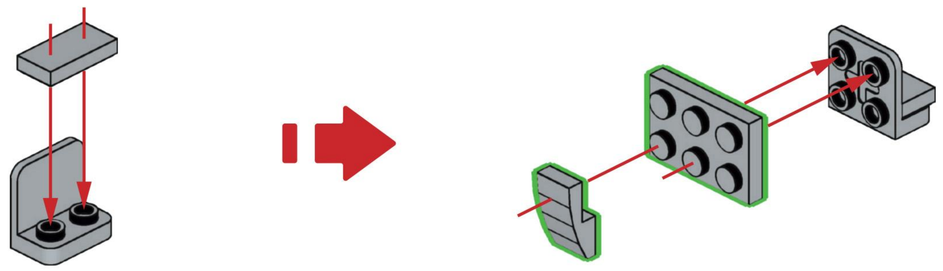

x2

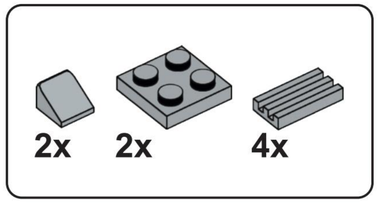

N14

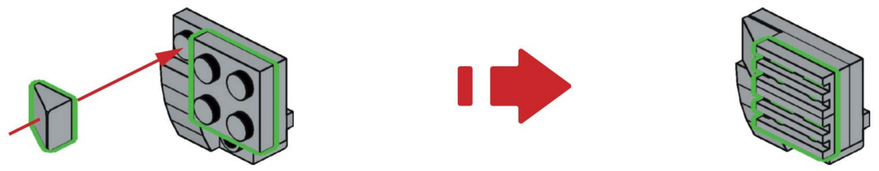

x2

N15

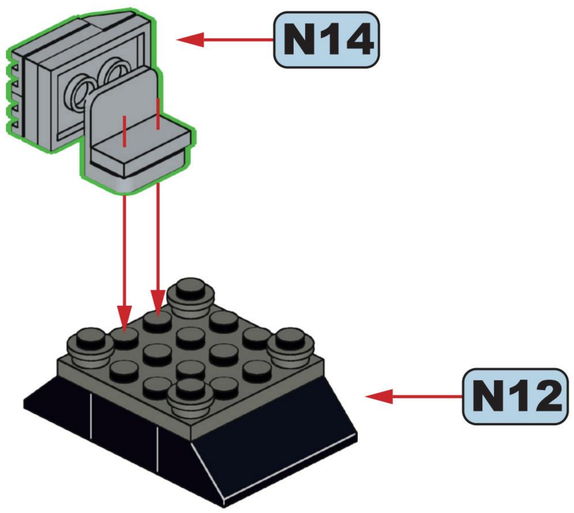

x2

N16

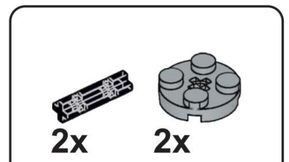

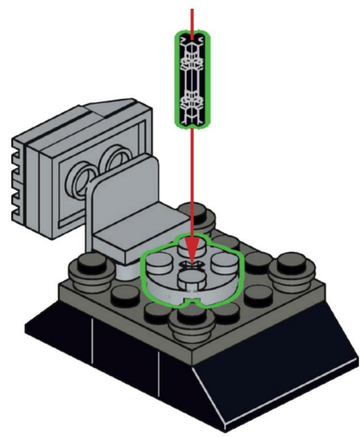

x2

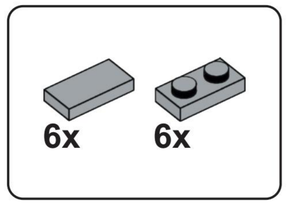

N17

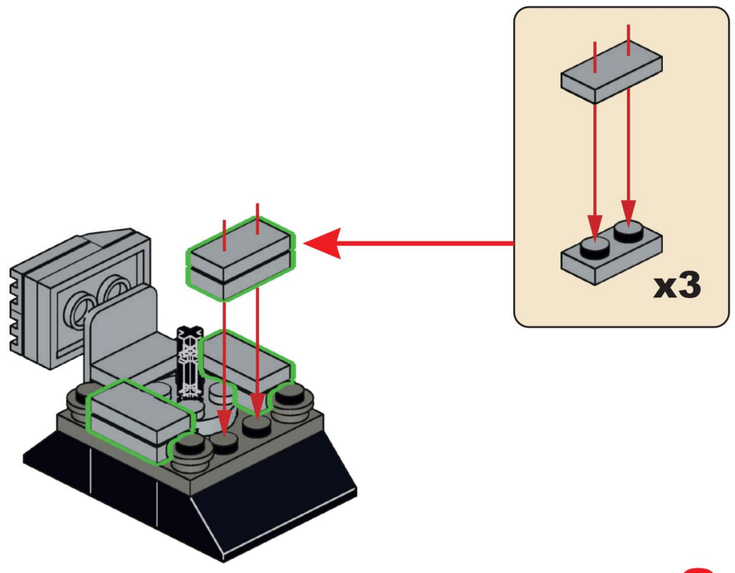

x2

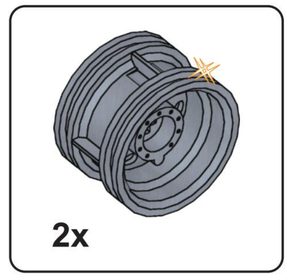

N18

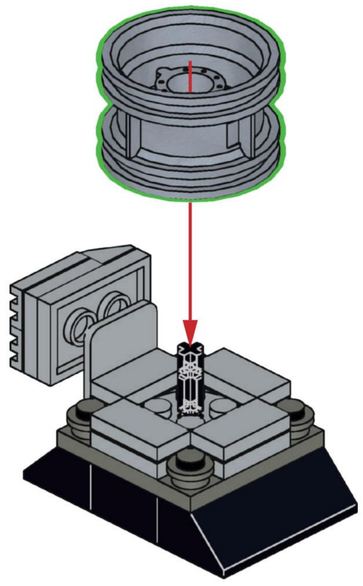

x2

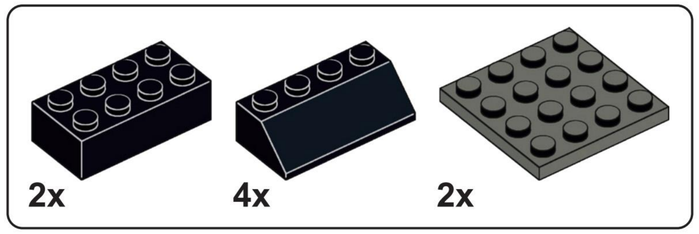

N19

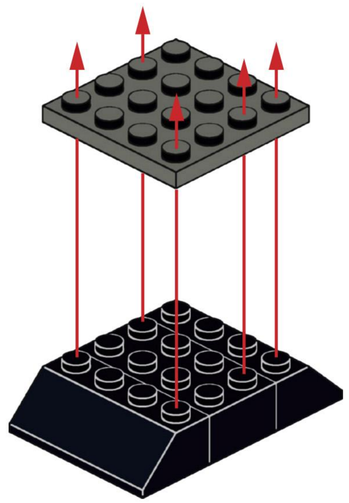

x2

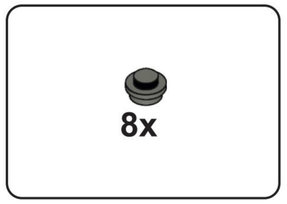

N20

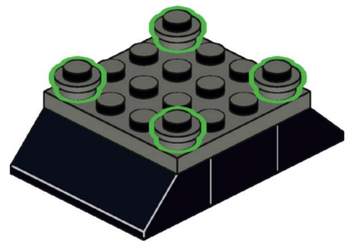

x2

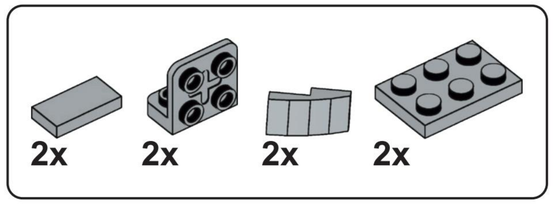

N21

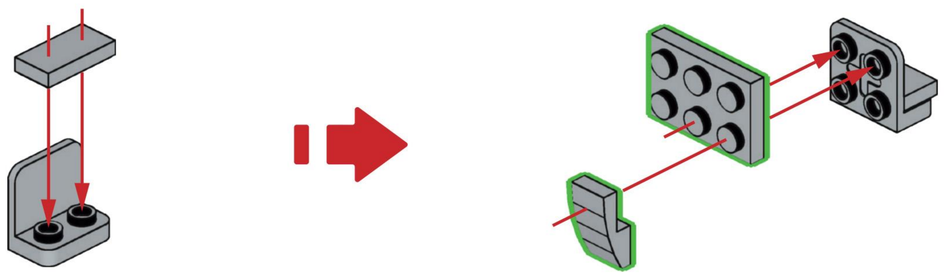

x2

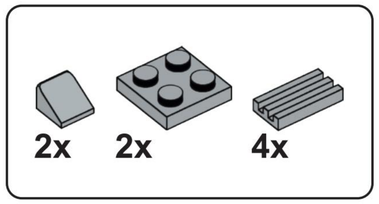

N22

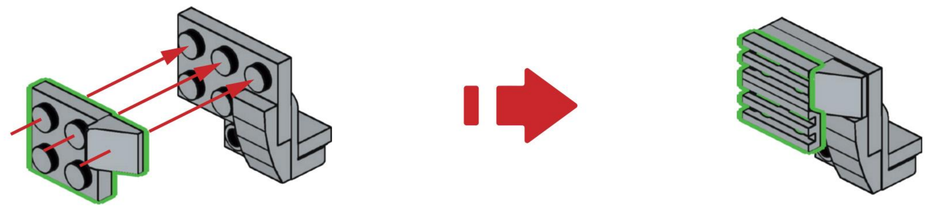

x2

N23

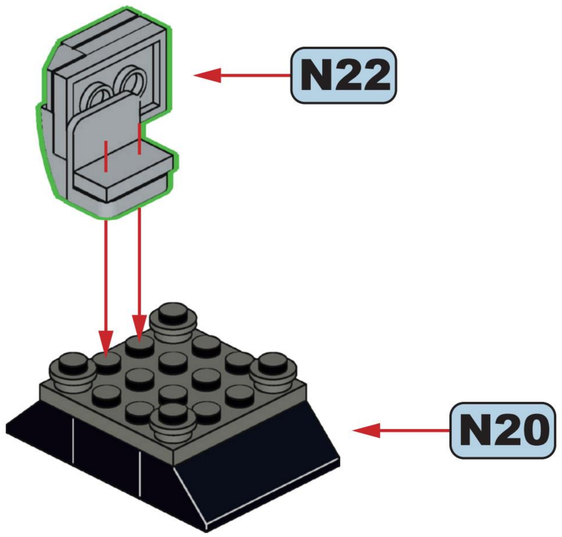

x2

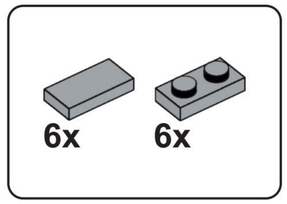

N25

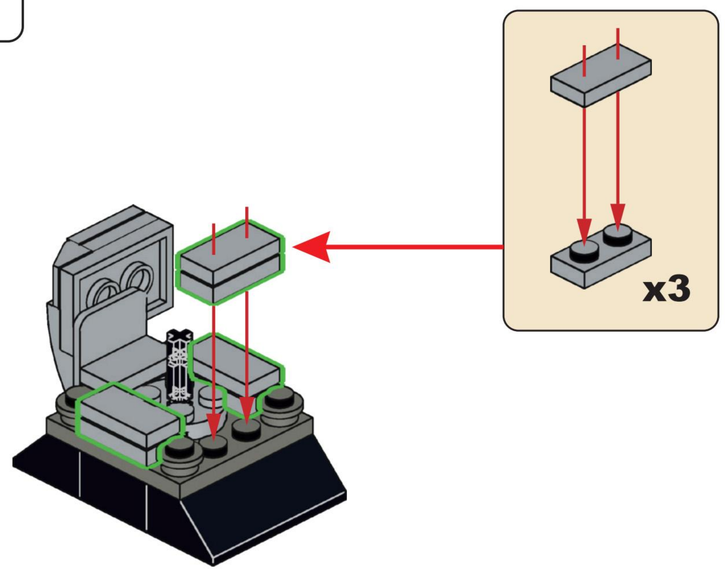

x2

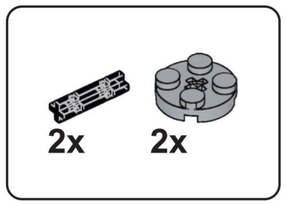

N24

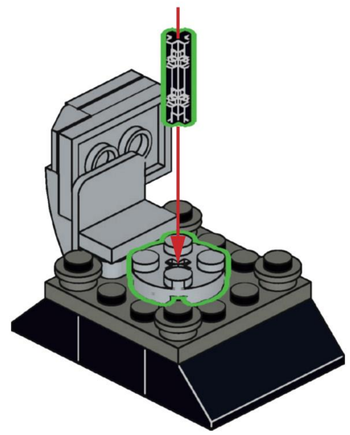

x2

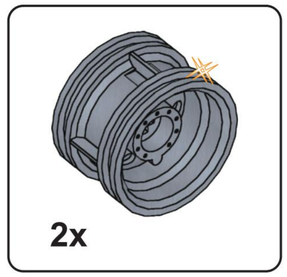

N26

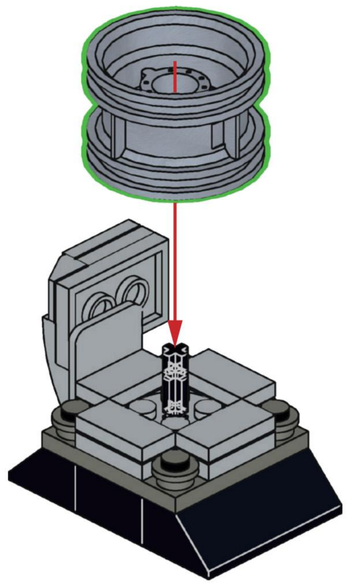

x2

N27

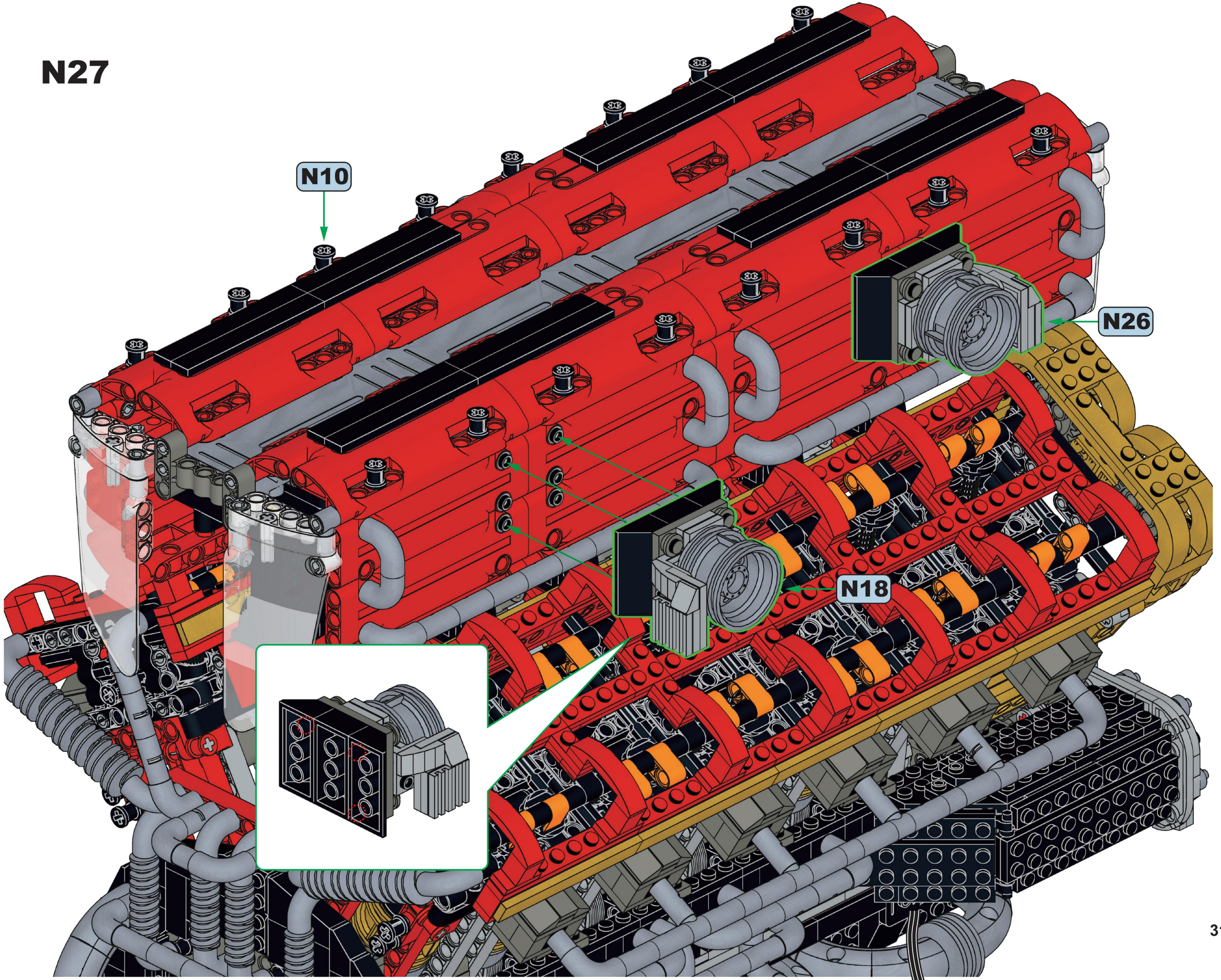

N28

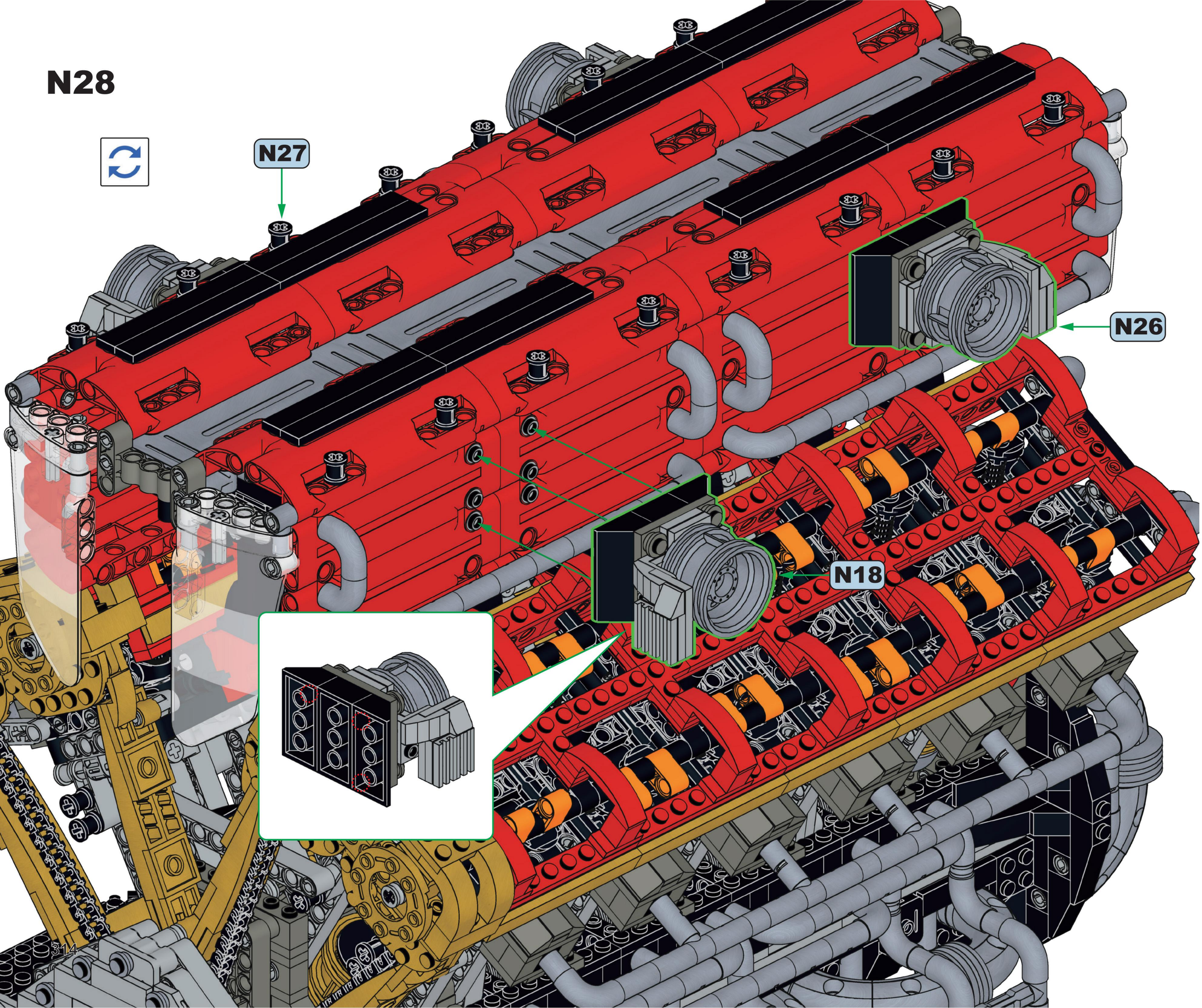

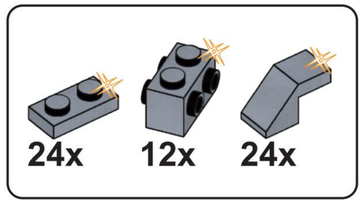

N29

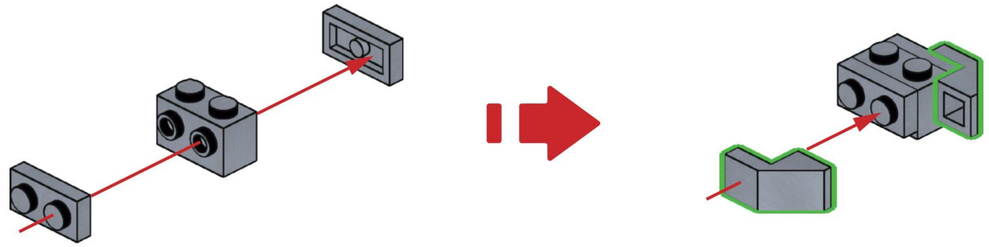

x12

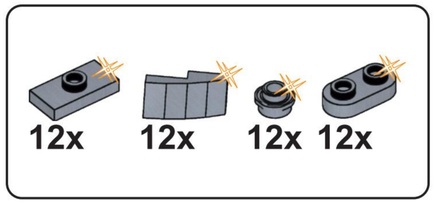

N30

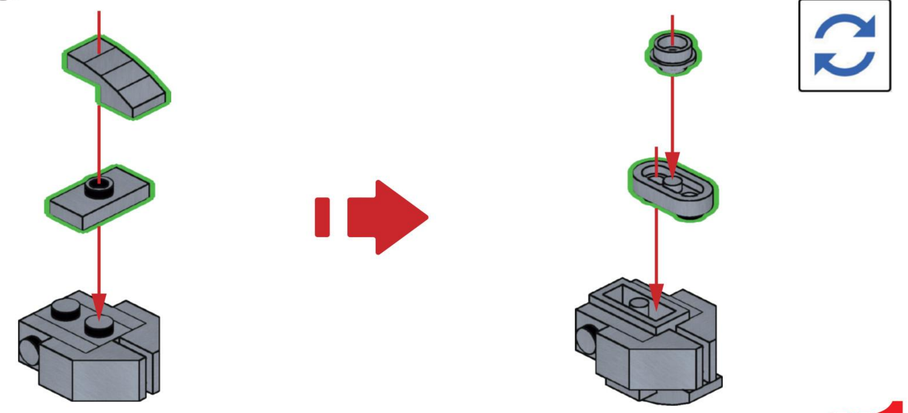

x12

N31

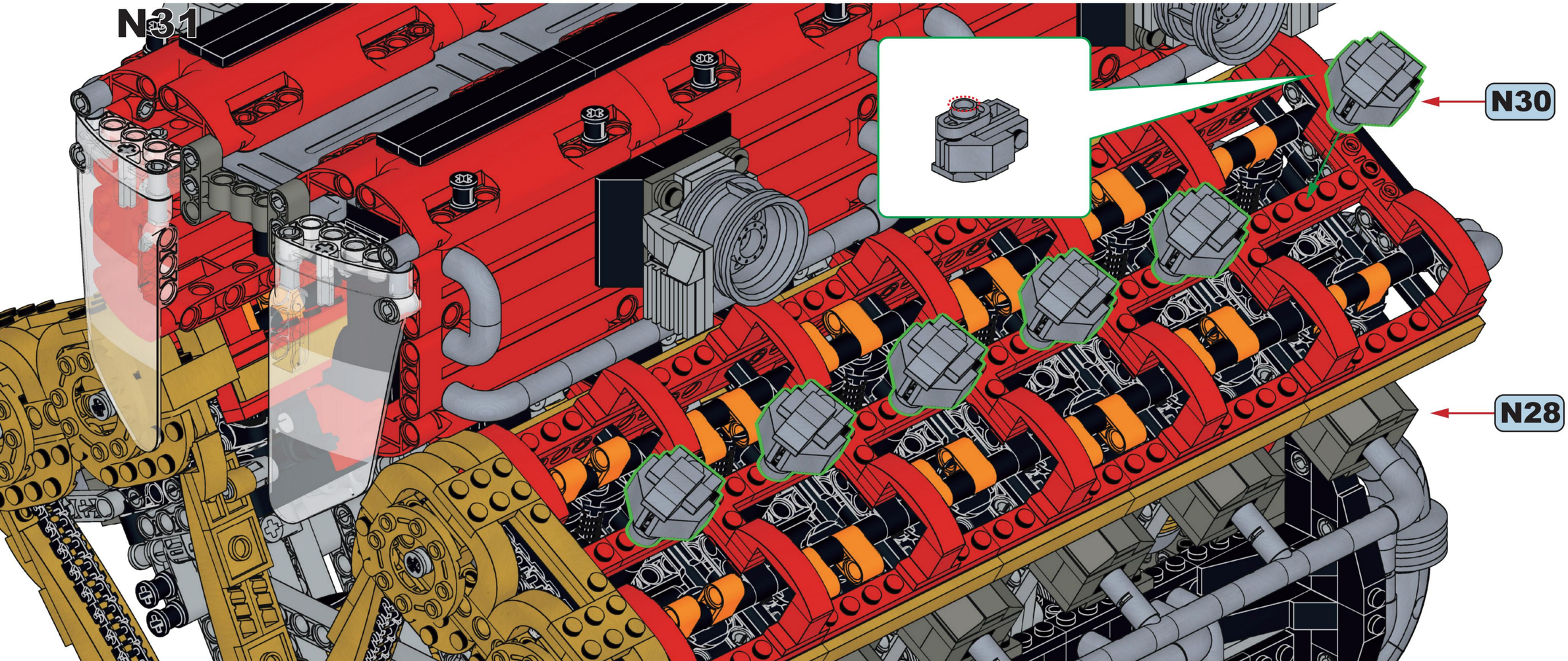

N32

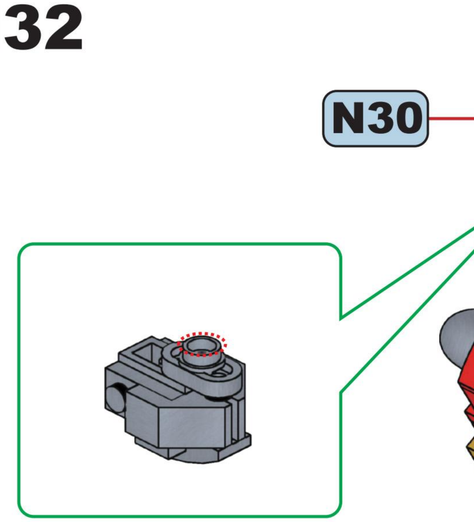



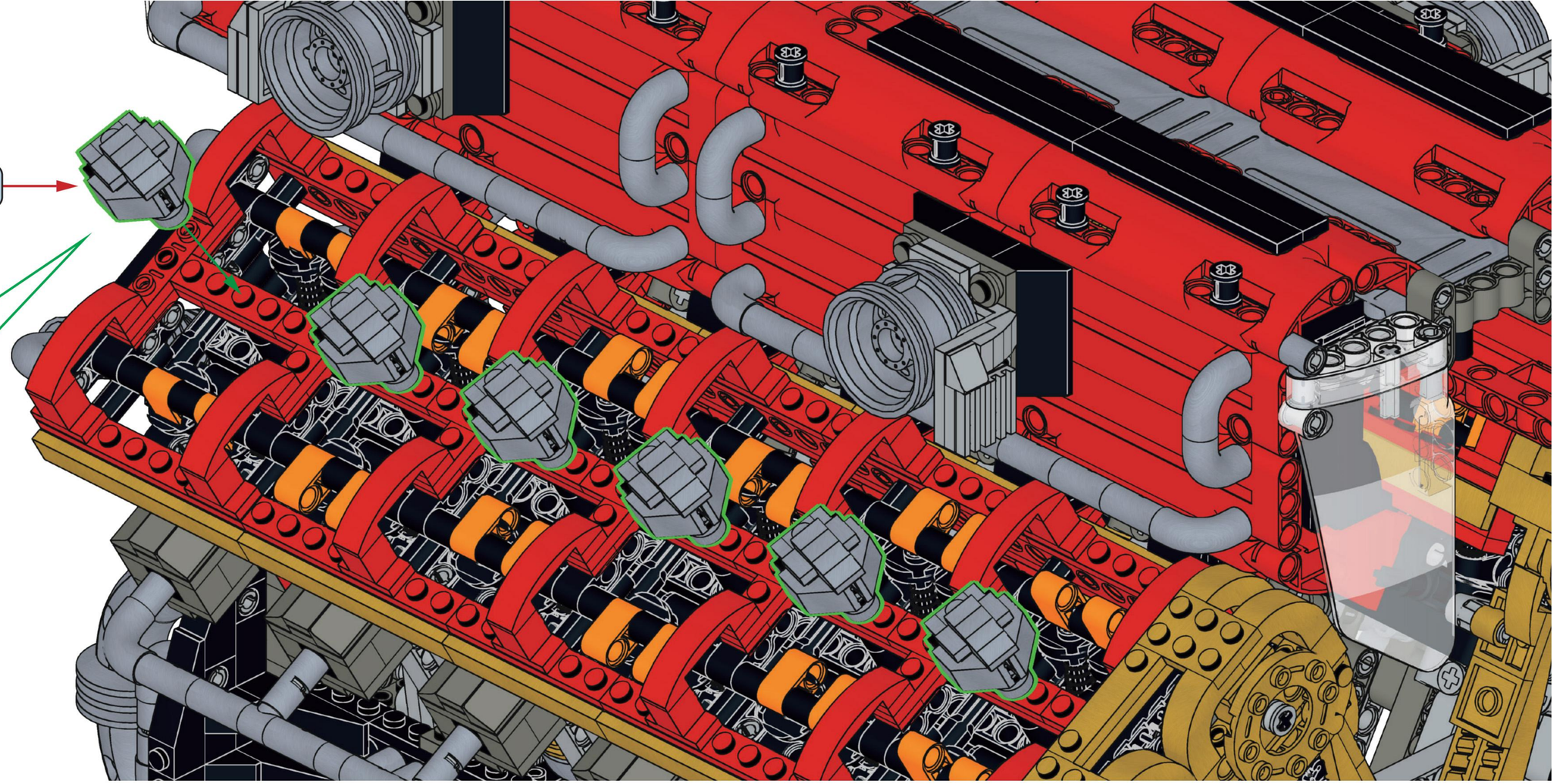

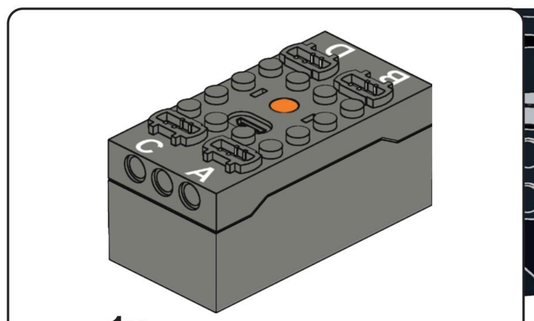

N33

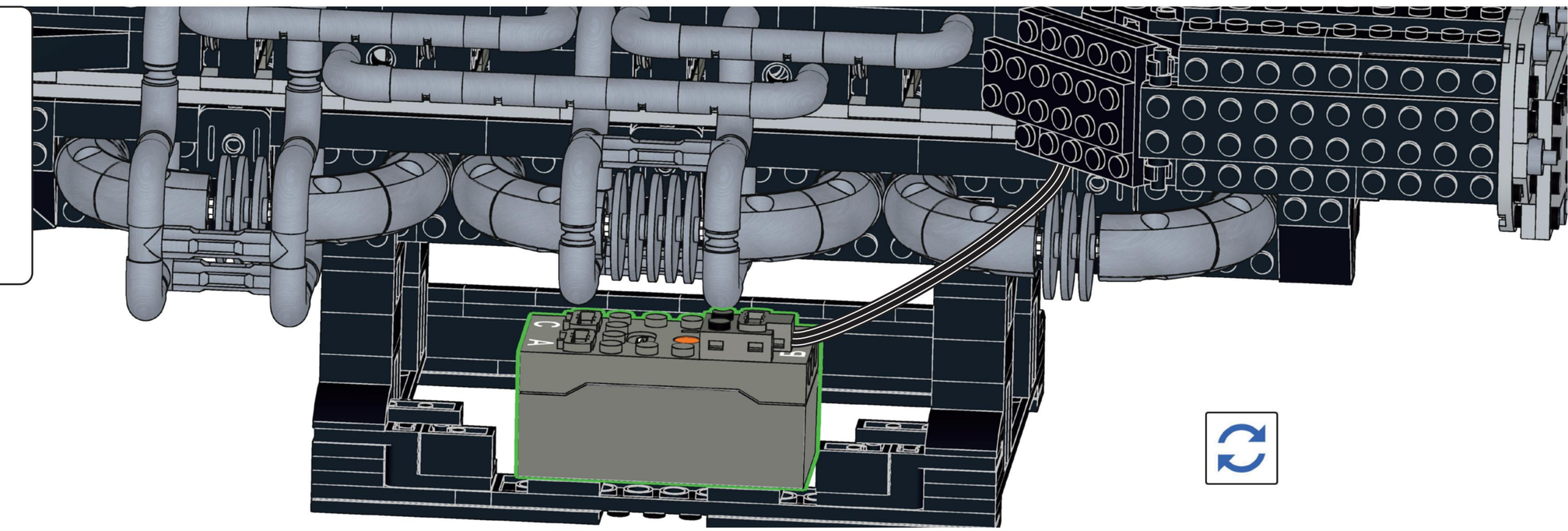

1

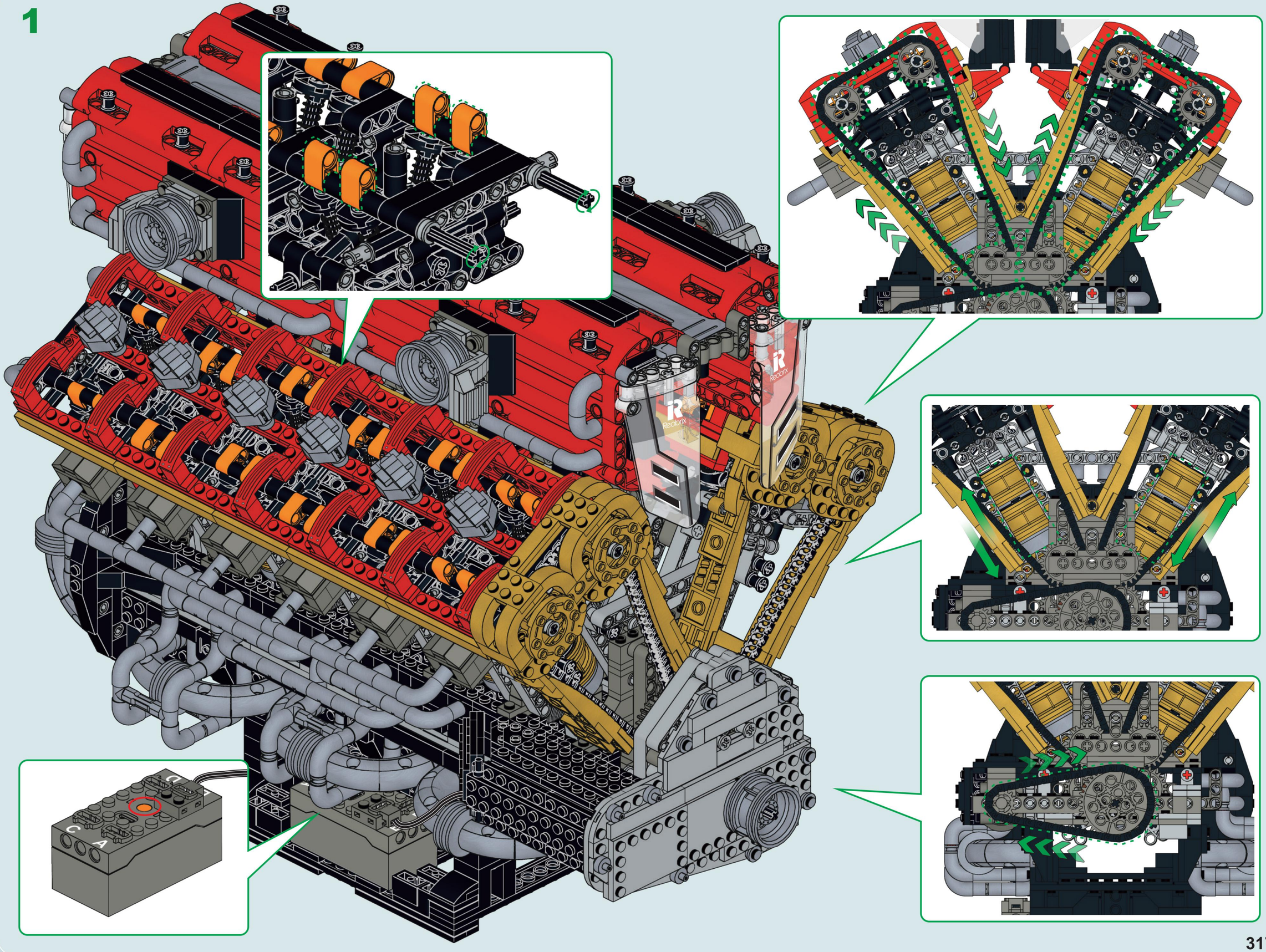

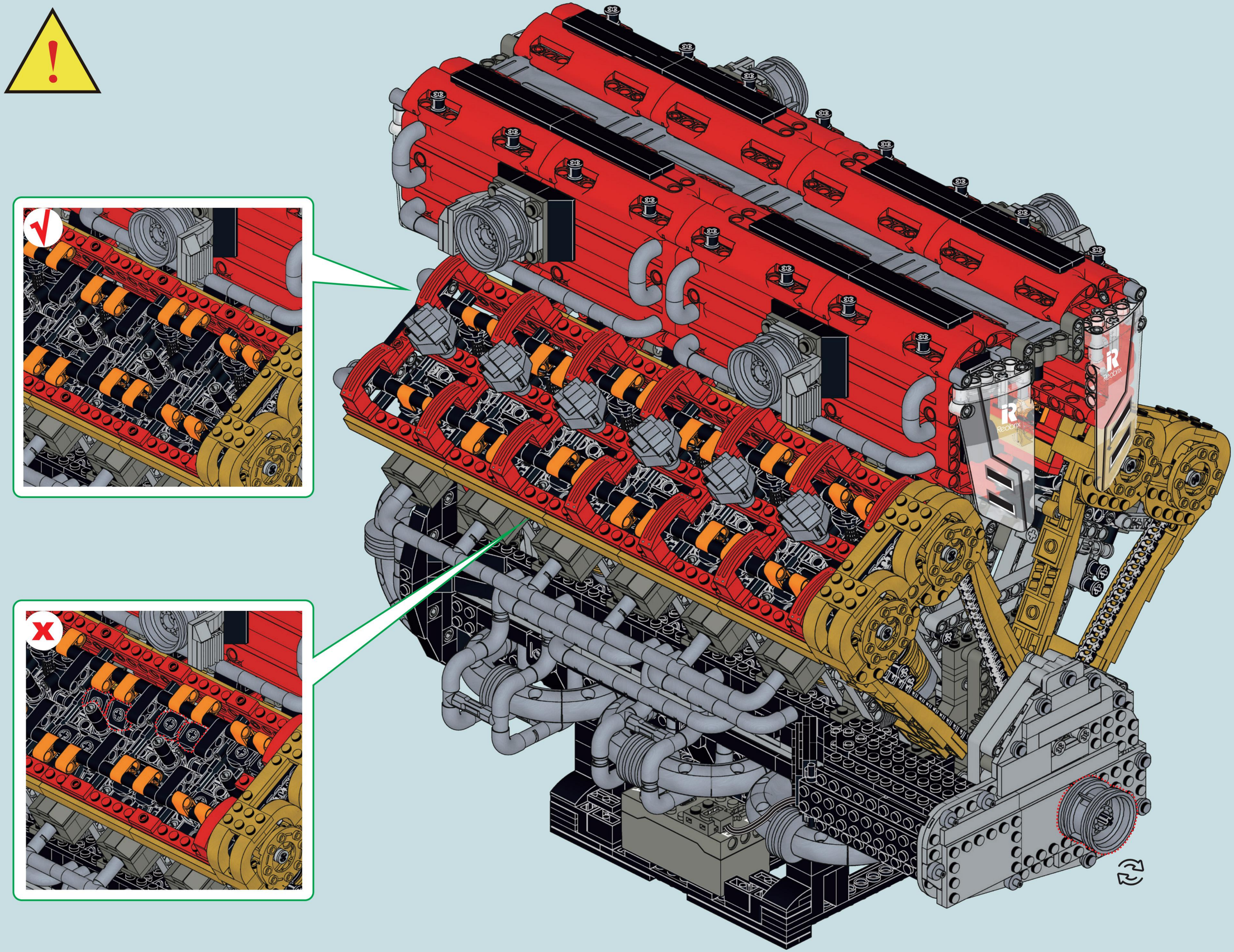

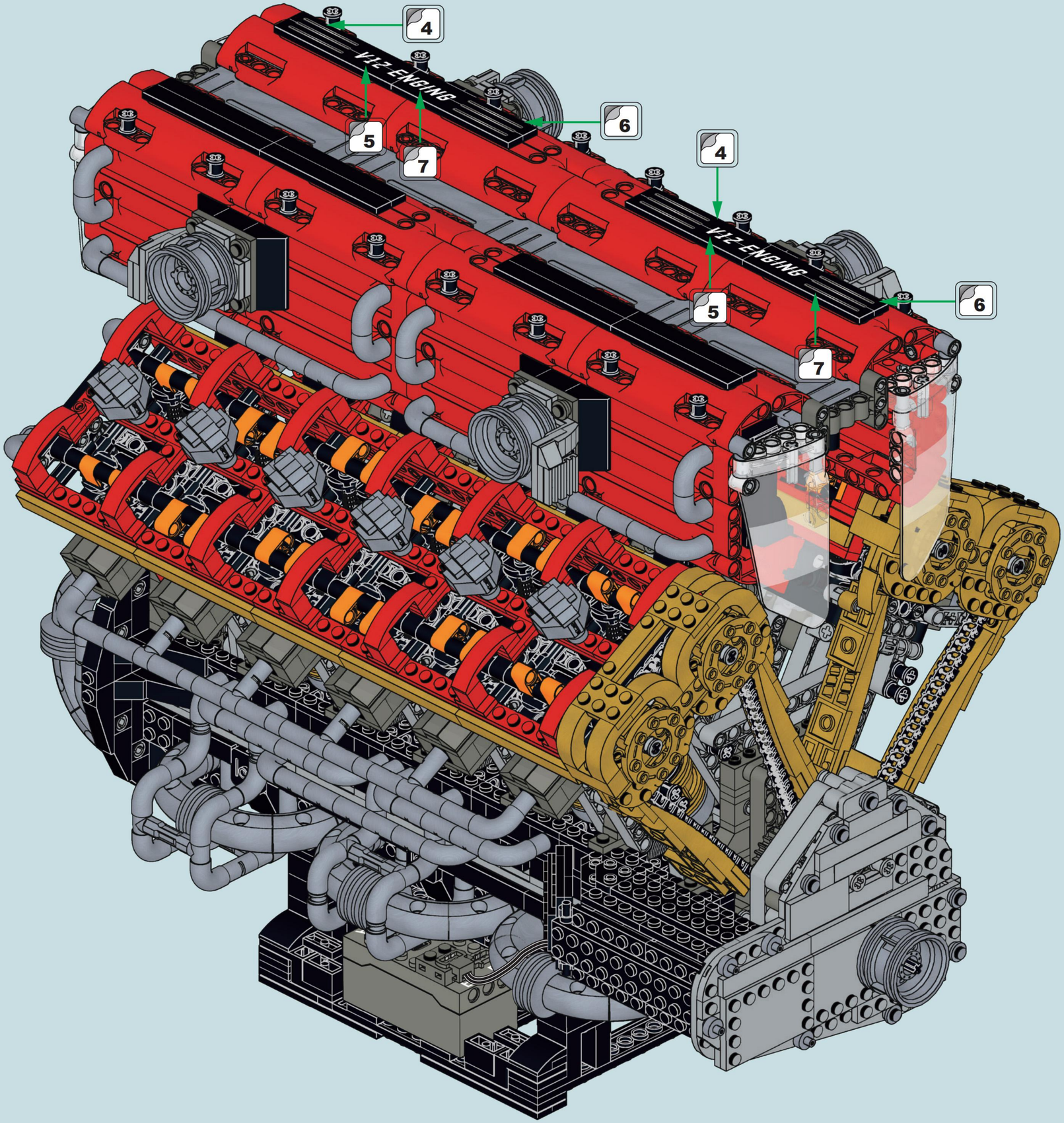
4
V12 ENGINE
5
7
6
4
V12 ENGINE
5
7
6

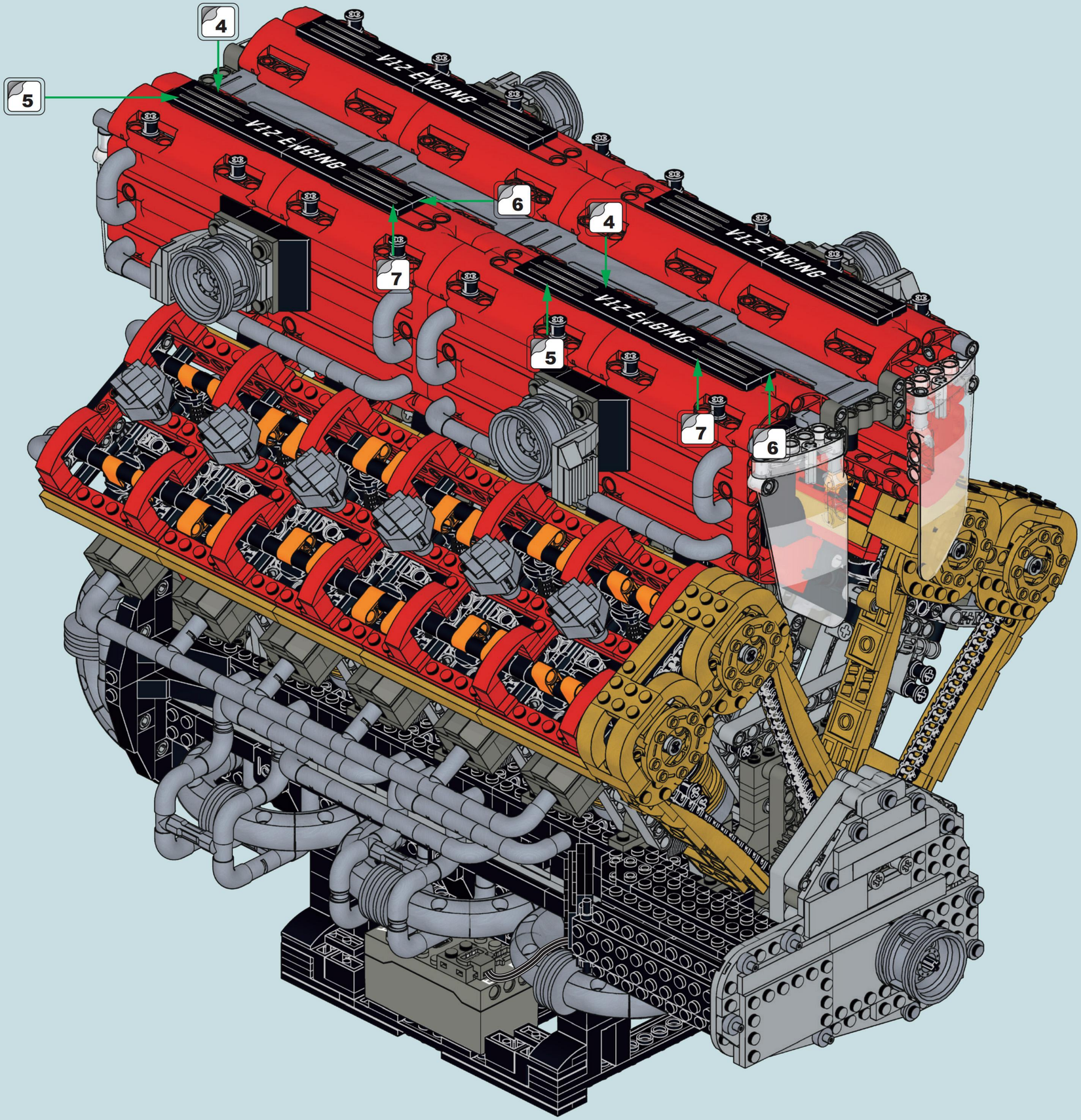
4
5
V12 ENGINE
V12 ENGINE
6
4
V12 ENGINE
7
V12 ENGINE
5
7
6

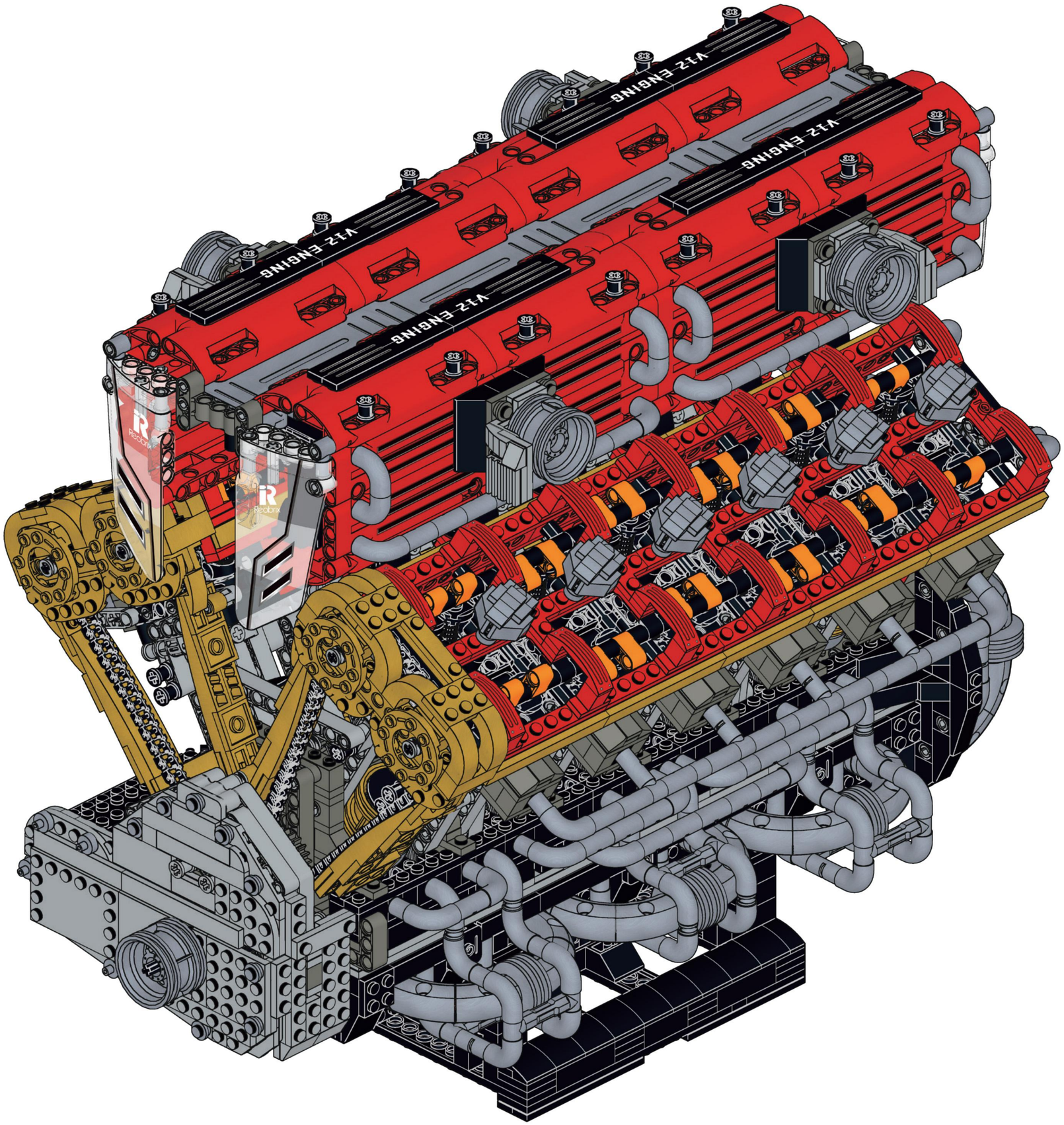
V12 ENGINE
V12 ENGINE
V12 ENGINE
V12 ENGINE

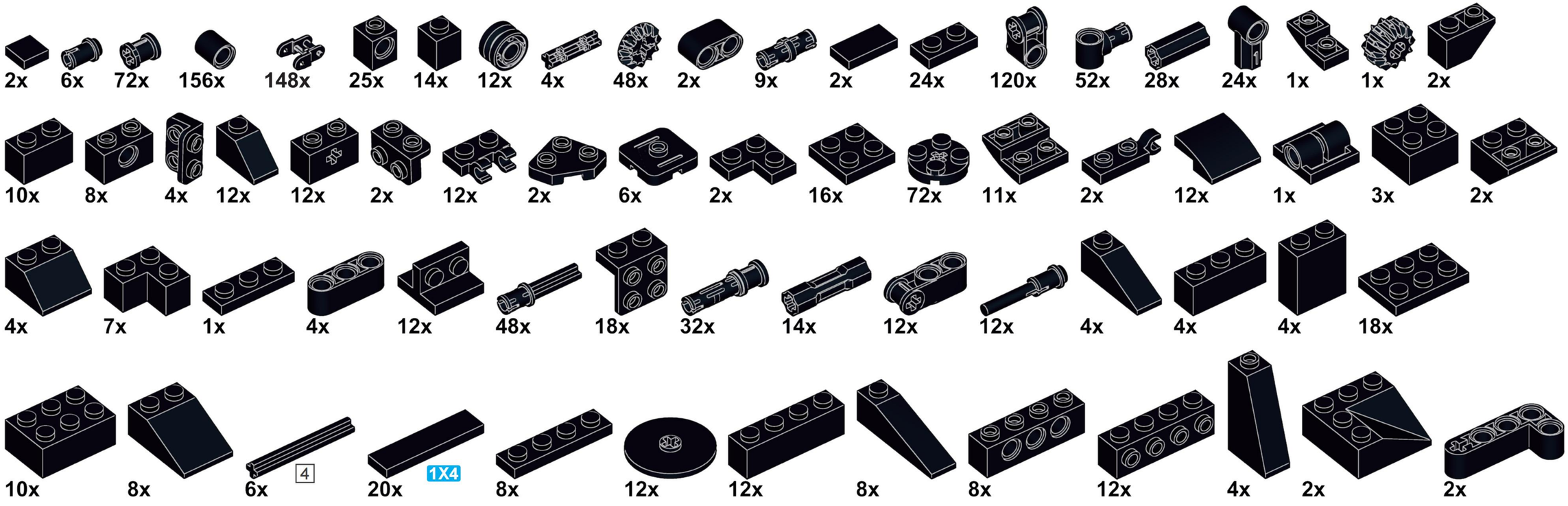
2x
6x
72x
156x
148x
25x
14x
12x
4x
48x
2x
9x
2x
24x
120x
52x
28x
24x
1x
1x
2x
10x
8x
4x
12x
12x
2x
12x
2x
6x
2x
16x
72x
11x
2x
12x
1x
3x
2x
4x
7x
1x
4x
12x
48x
18x
32x
14x
12x
12x
4x
4x
4x
18x
10x
8x
6x
4
20x
1X4
8x
12x
12x
8x
8x
12x
4x
2x
2x

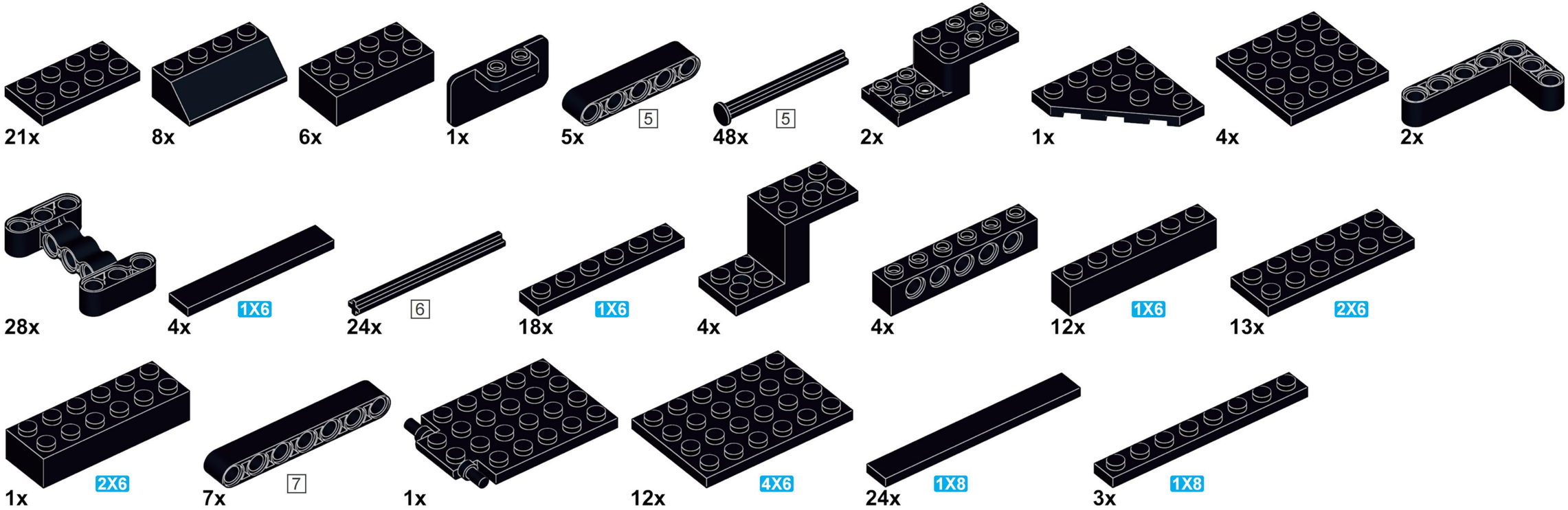
21x
8x
6x
1x
5x
5
48x
5
2x
1x
4x
2x
28x
4x
1X6
24x
6
18x
1X6
4x
4x
12x
1X6
13x
2X6
1x
2X6
7x
7
1x
12x
4X6
24x
1X8
3x
1X8



1x 2X8



12x

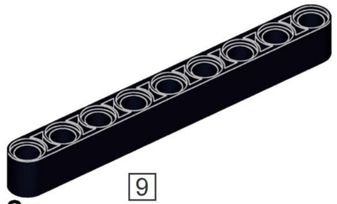

2x 9



4x 1X10



9x 2X10

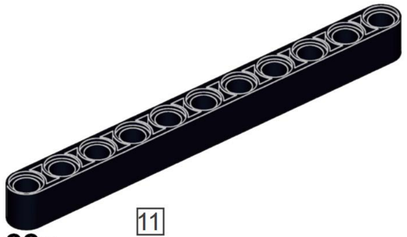

22x 11

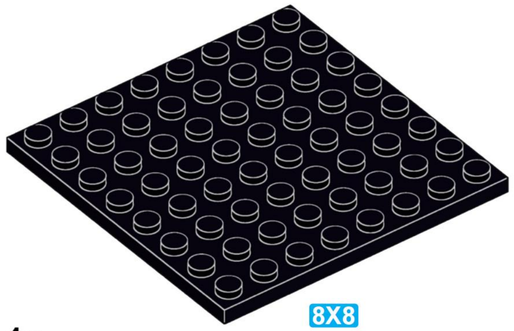

4x 8X8

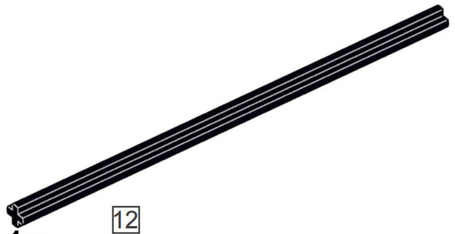

1x 12

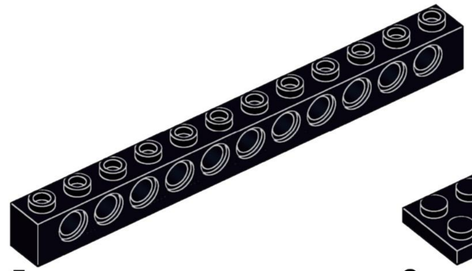

5x

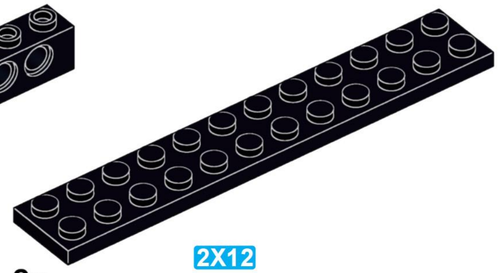

2x 2X12

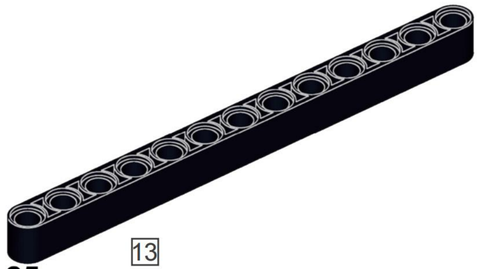

25x 13

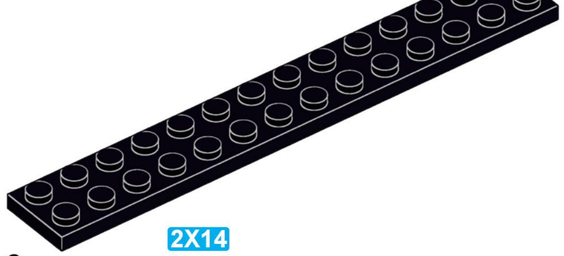

6x 2X14

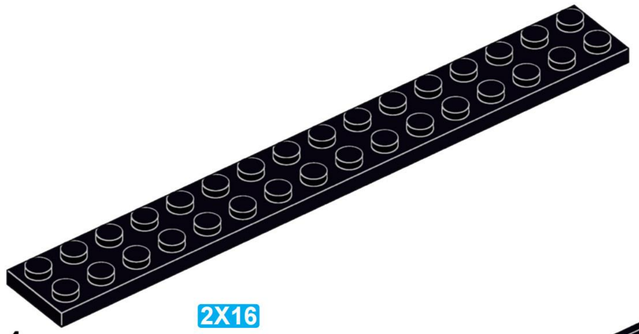

4x 2X16

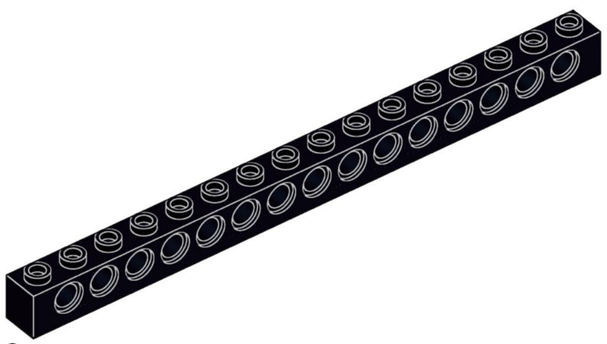

8x

4x 42

1x

1x

12x

16x

27x

14x

32x

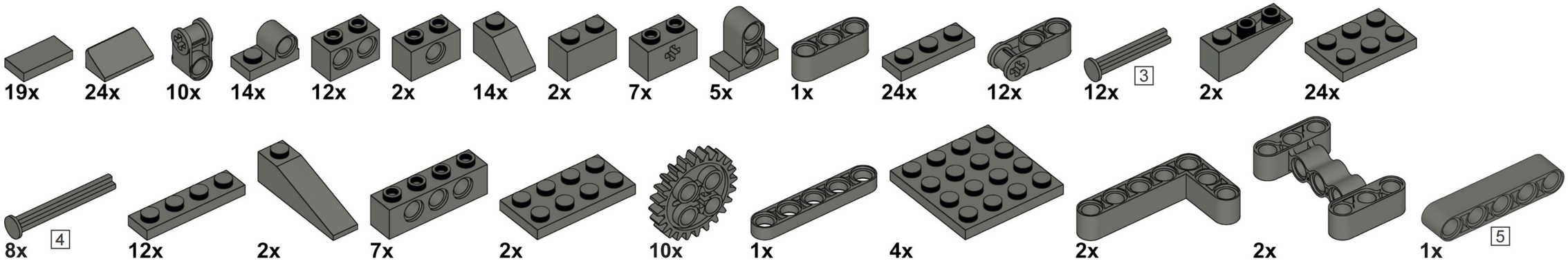
19x
24x
10x
14x
12x
2x
14x
2x
7x
5x
1x
24x
12x
12x
3
2x
24x
8x
4
12x
2x
7x
2x
10x
1x
4x
2x
2x
1x
5
12x
1X6
2x
1x
2X6
1x
7
7x
1X8
1x
8
1x
2X8

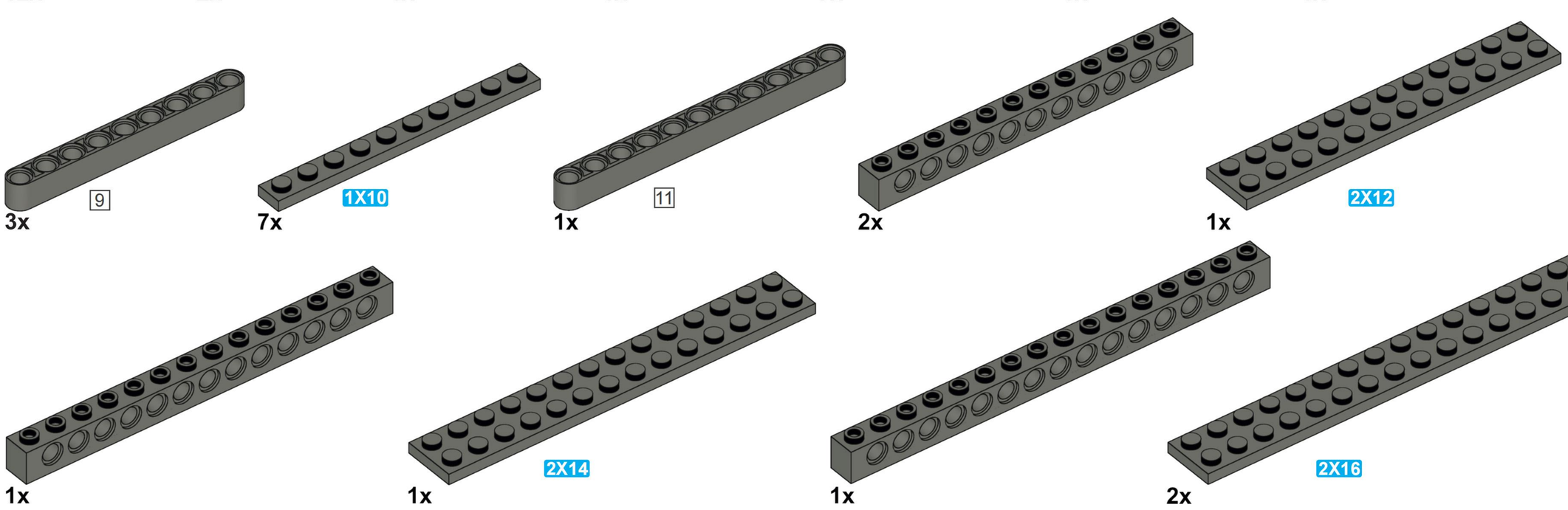
9
3x
1X10
7x
11
1x
2x
2X12
1x
1x
2X14
1x
1x
2X16
2x

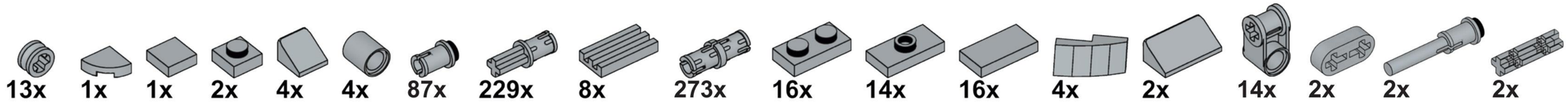
13x
1x
1x
2x
4x
4x
87x
229x
8x
273x
16x
14x
16x
4x
2x
14x
2x
2x
2x

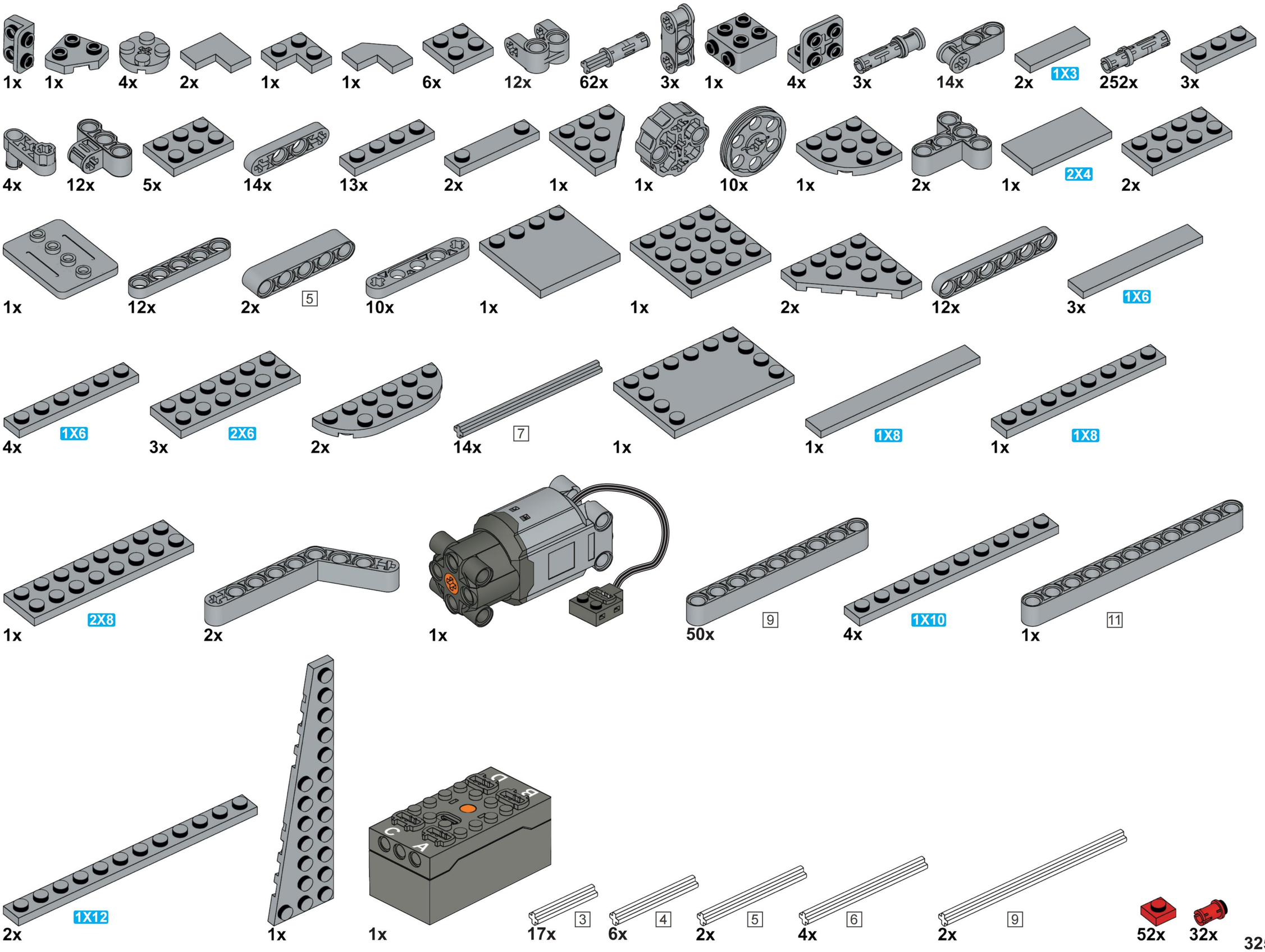
1x
1x
4x
2x
1x
1x
6x
12x
62x
3x
1x
4x
3x
14x
2x
1X3
252x
3x
4x
12x
5x
14x
13x
2x
1x
1x
10x
1x
2x
1x
2X4
2x
1x
12x
2x
5
10x
1x
1x
2x
12x
3x
1X6
4x
1X6
3x
2X6
2x
14x
7
1x
1x
1X8
1x
1X8
1x
2X8
2x
1x
50x
9
4x
1X10
1x
11
2x
1X12
1x
1x
C
B
A
17x
3
6x
4
2x
5
4x
6
2x
9
52x
32x
325

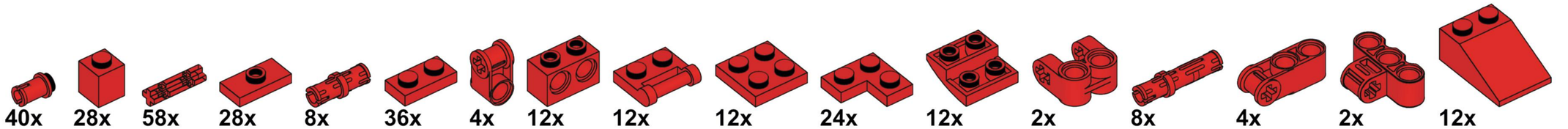
40x
28x
58x
28x
8x
36x
4x
12x
12x
12x
24x
12x
2x
8x
4x
2x
12x

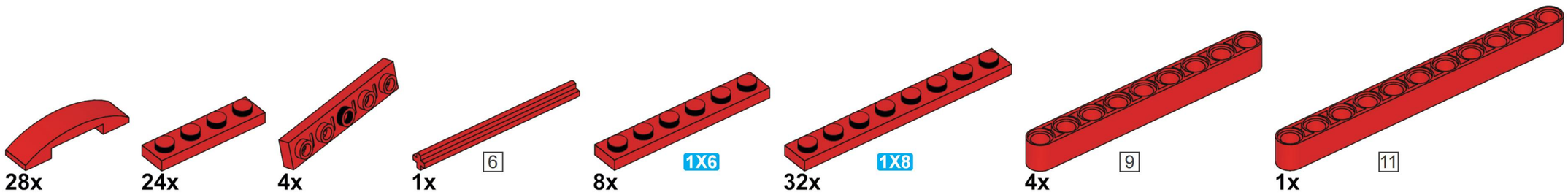
28x
24x
4x
1x
6
8x
1X6
32x
1X8
4x
9
1x
11

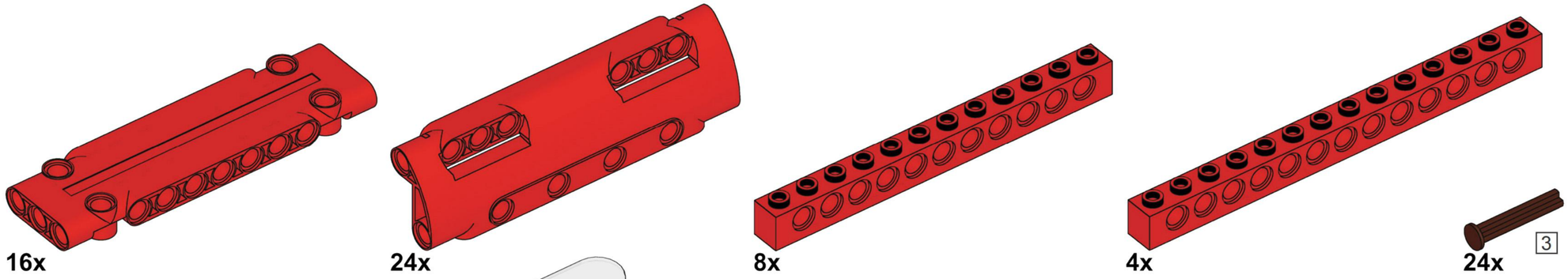
16x
24x
8x
4x
24x
3

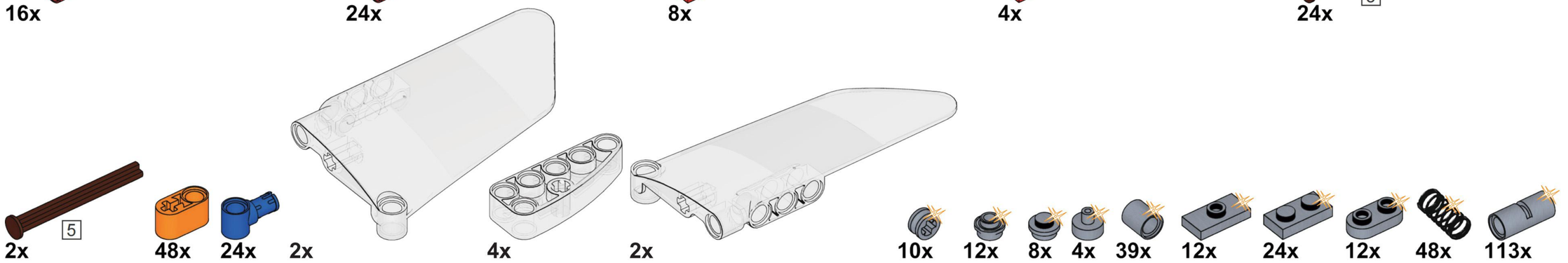
2x
5
48x
24x
2x
4x
2x
10x
12x
8x
4x
39x
12x
24x
12x
48x
113x

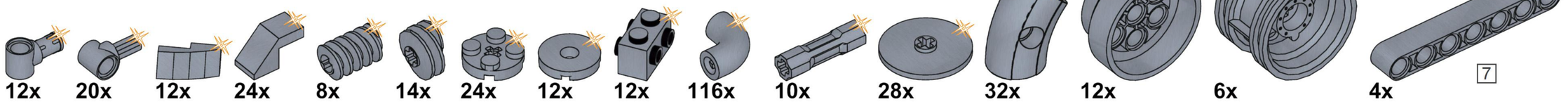
12x
20x
12x
24x
8x
14x
24x
12x
12x
116x
10x
28x
32x
12x
6x
4x
7

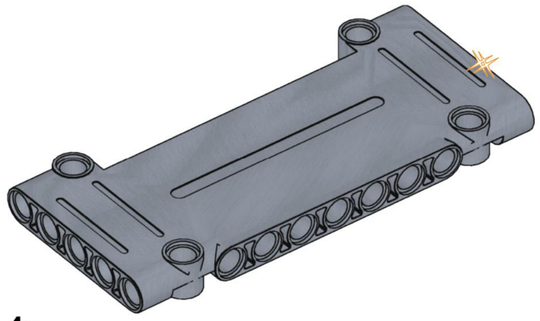

4x

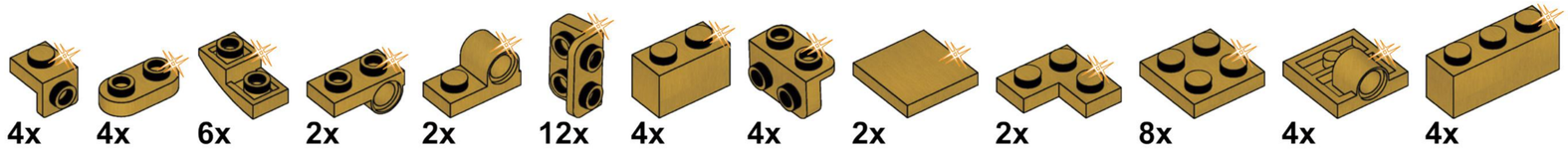

4x 4x 6x 2x 2x 12x 4x 4x 2x 2x 8x 4x 4x

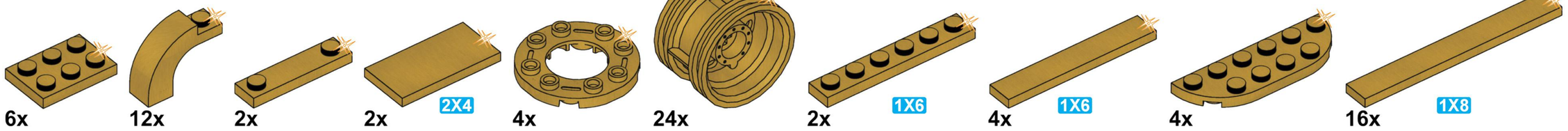

6x 12x 2x 2x 2X4 4x 24x 2x 1X6 4x 1X6 4x 16x 1X8

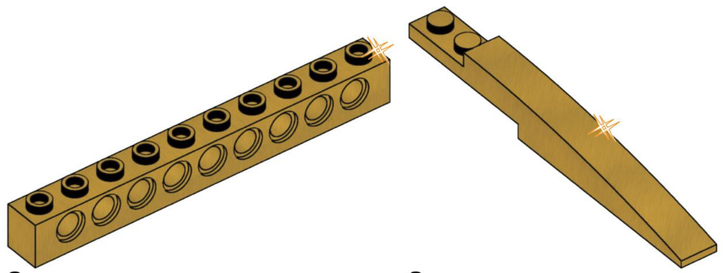

2x

8x

Reobrix

NO.33017

V12

ENGINE