Reobrix

NO.22008

# MECHANICAL

## Fire Truck

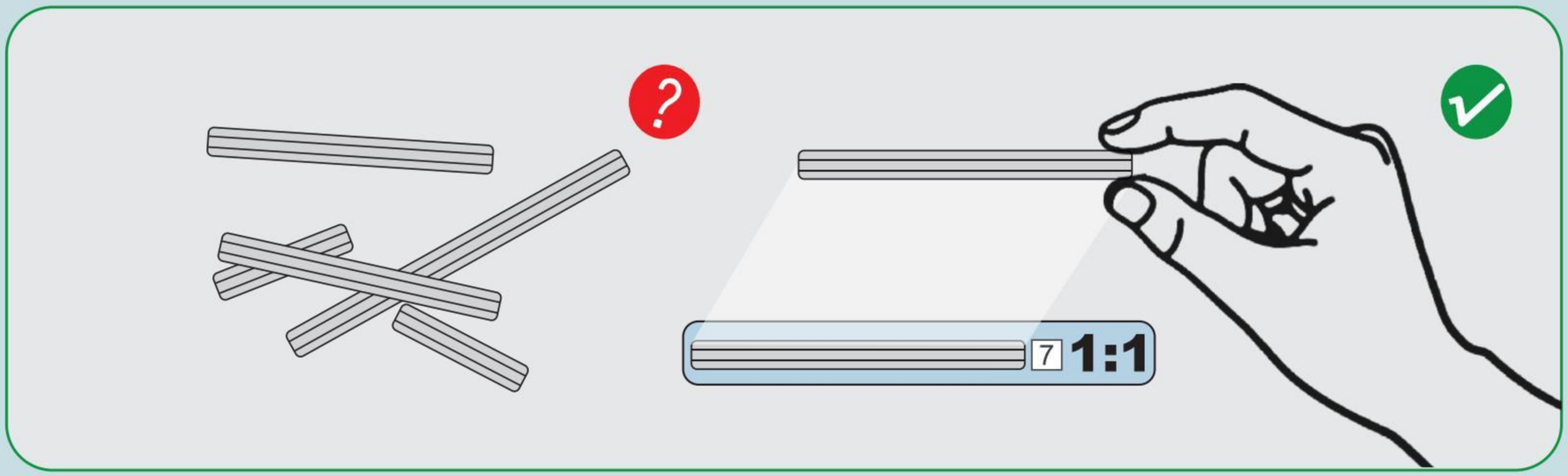
?
7
1:1

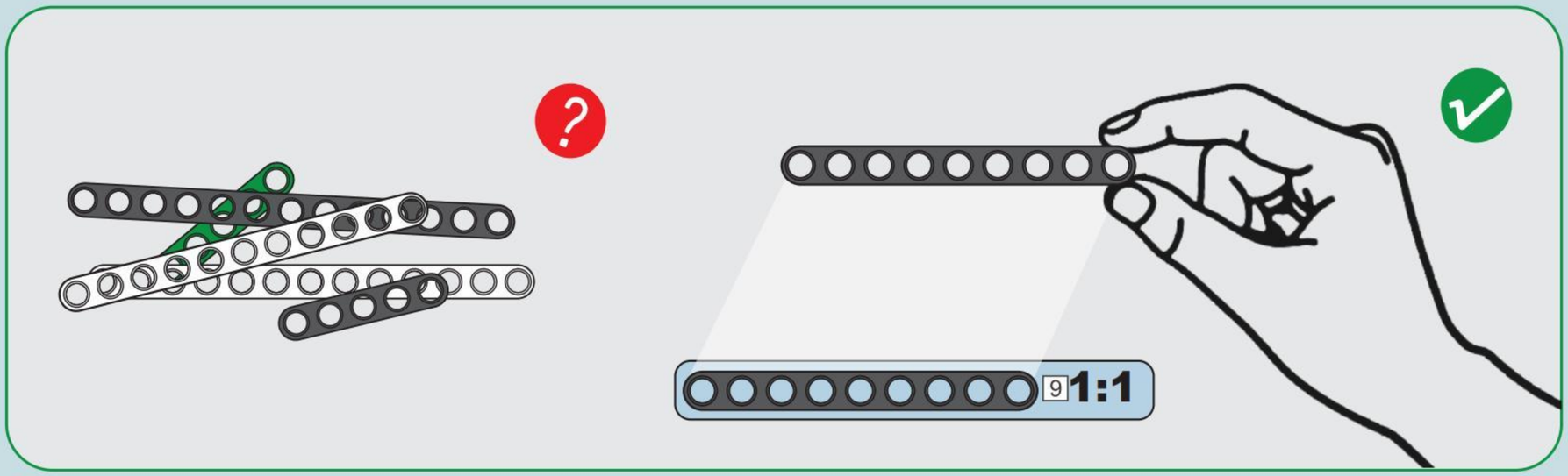
?
9
1:1

1

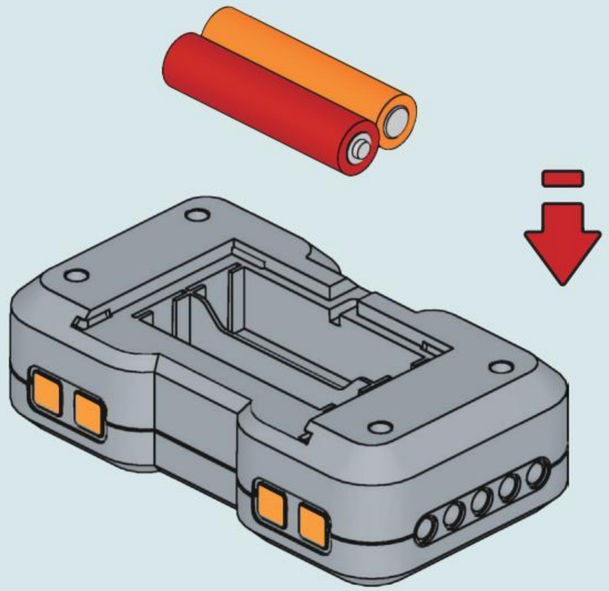

2

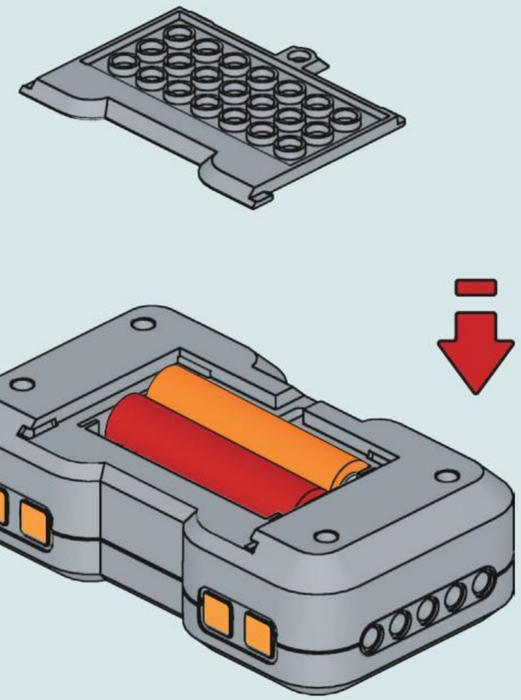

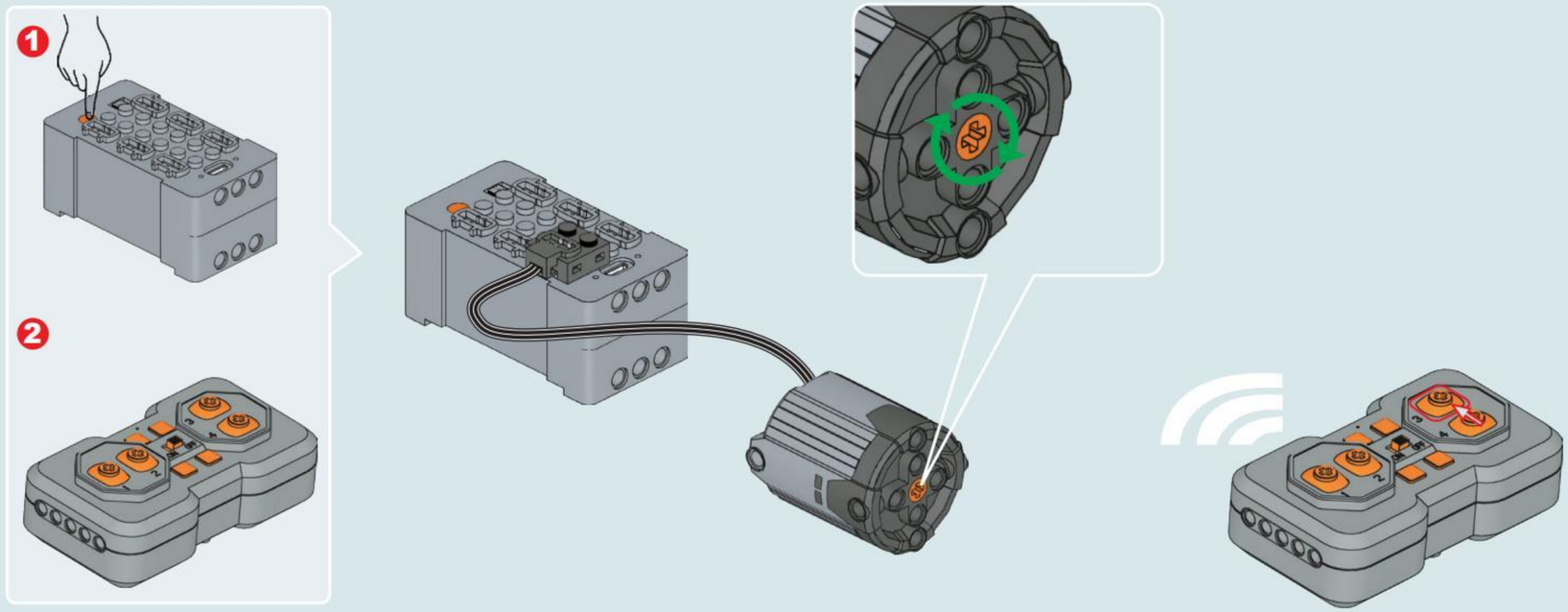
1
2

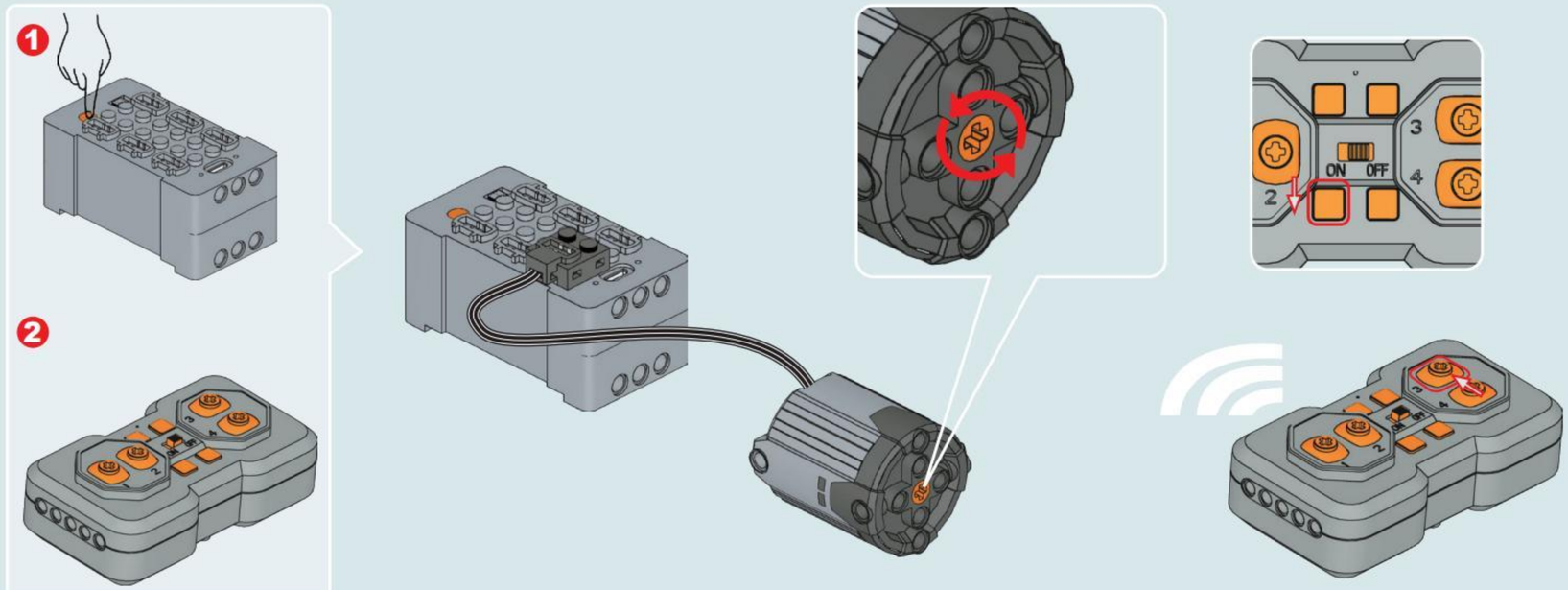
1
2
ON OFF
3
4
2

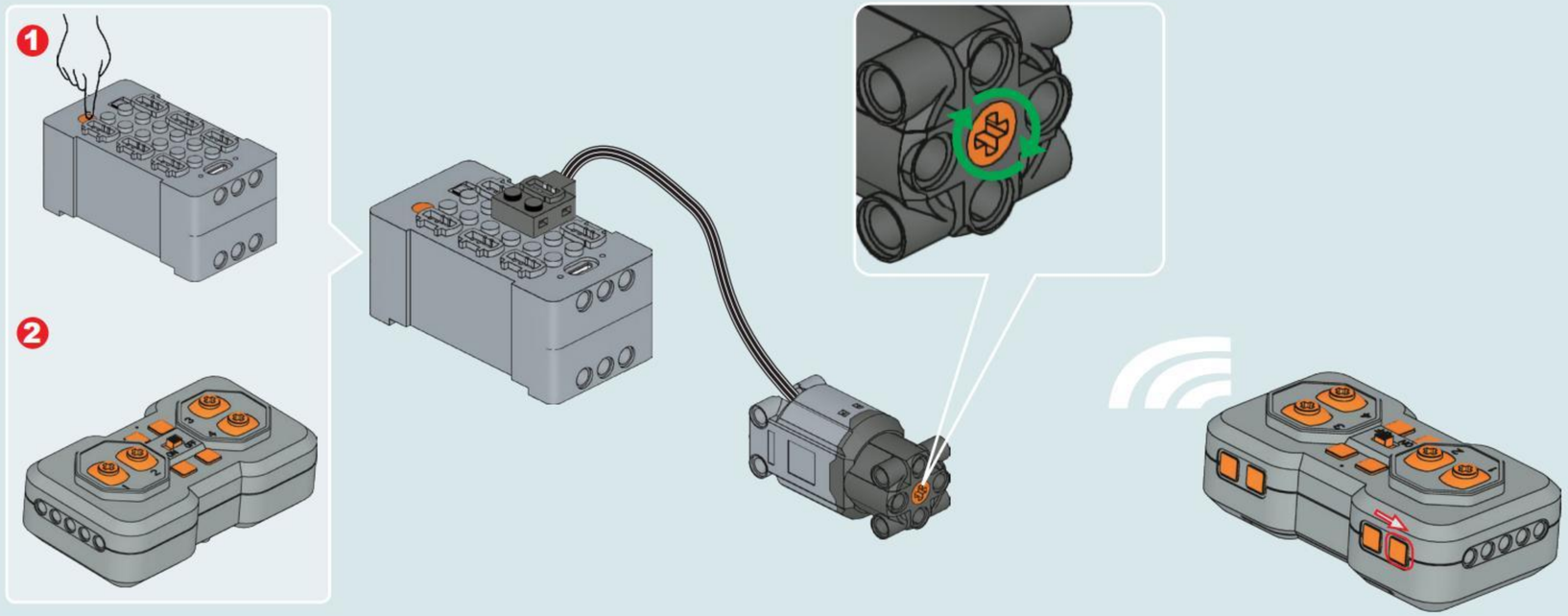
1
2

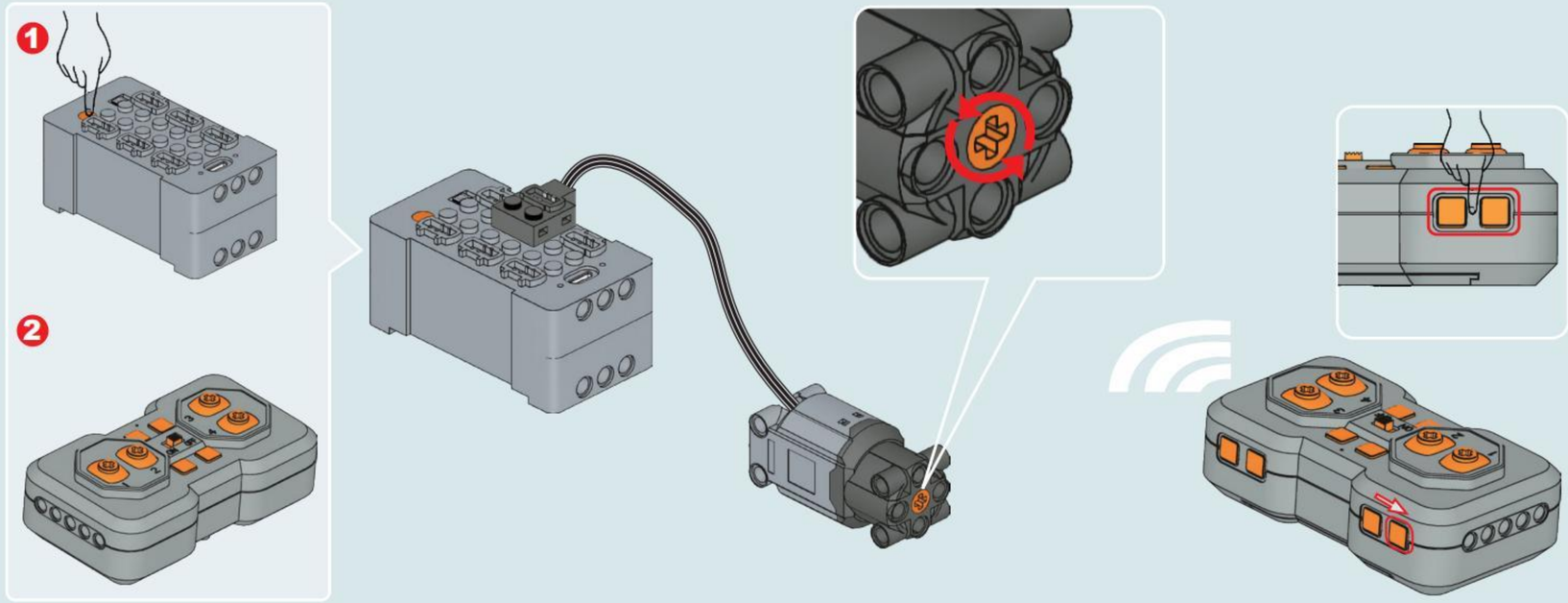
1
2

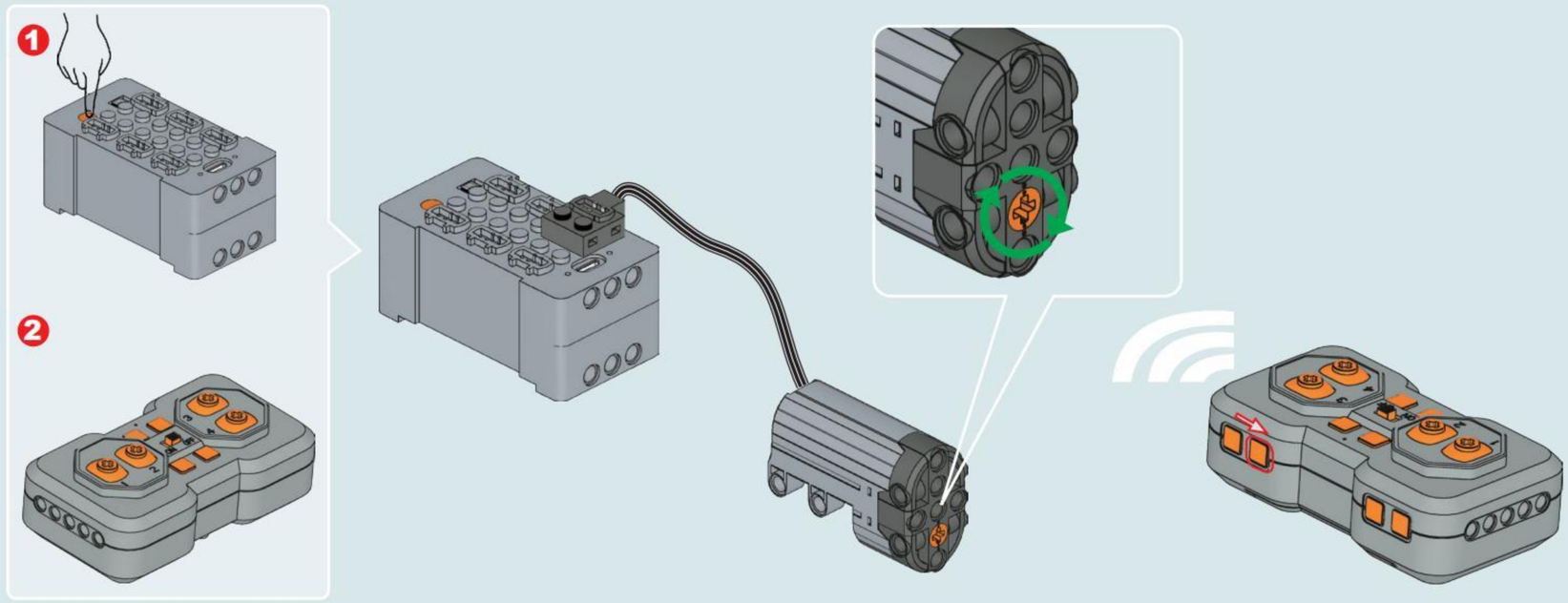
1
2

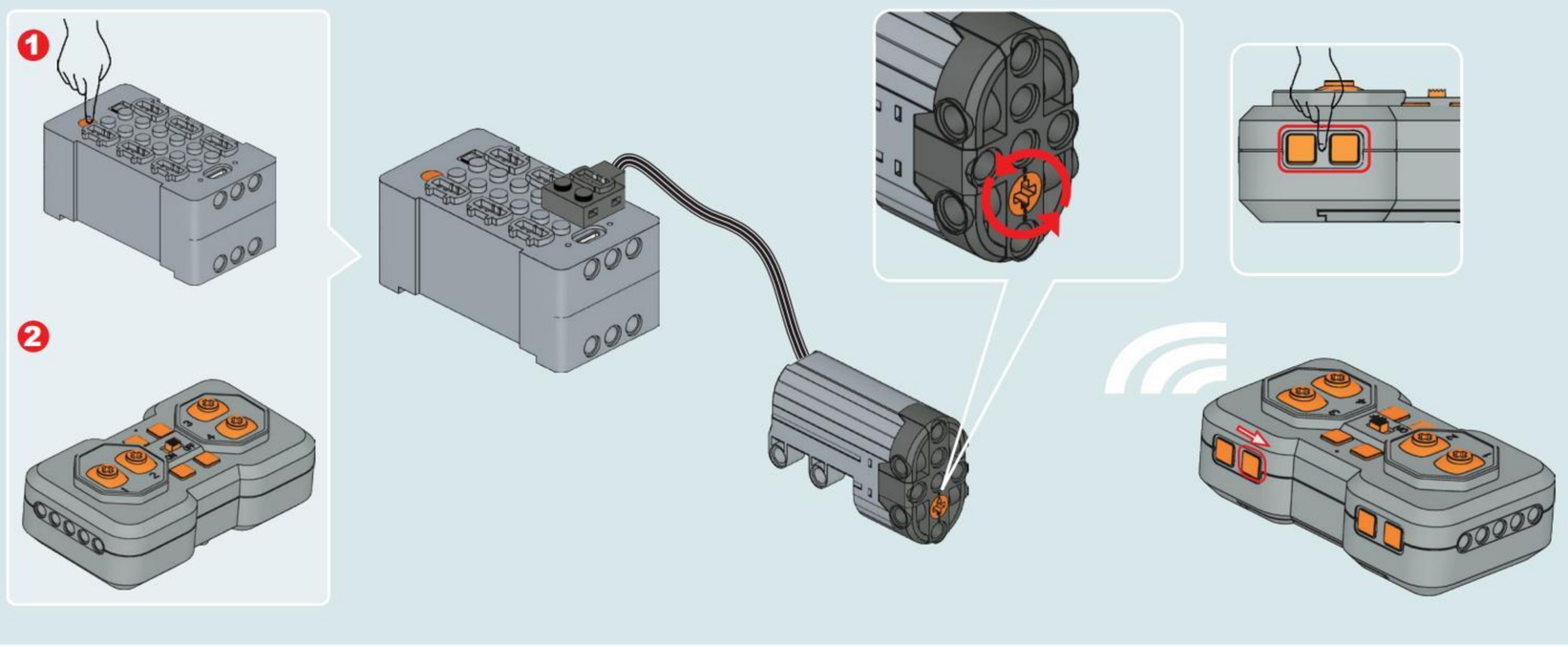
1
2

1

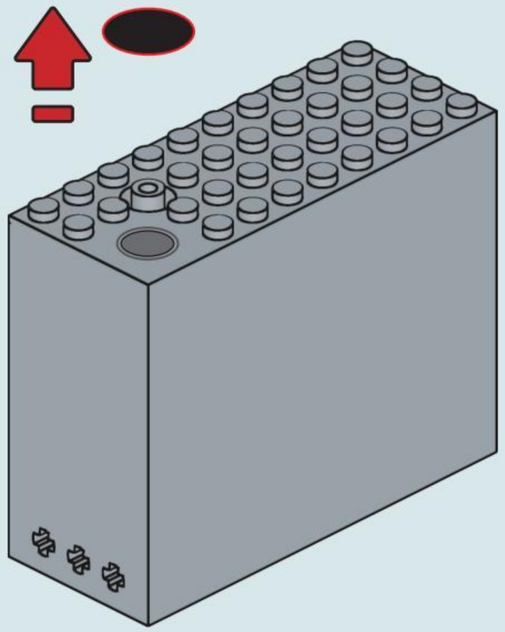

2

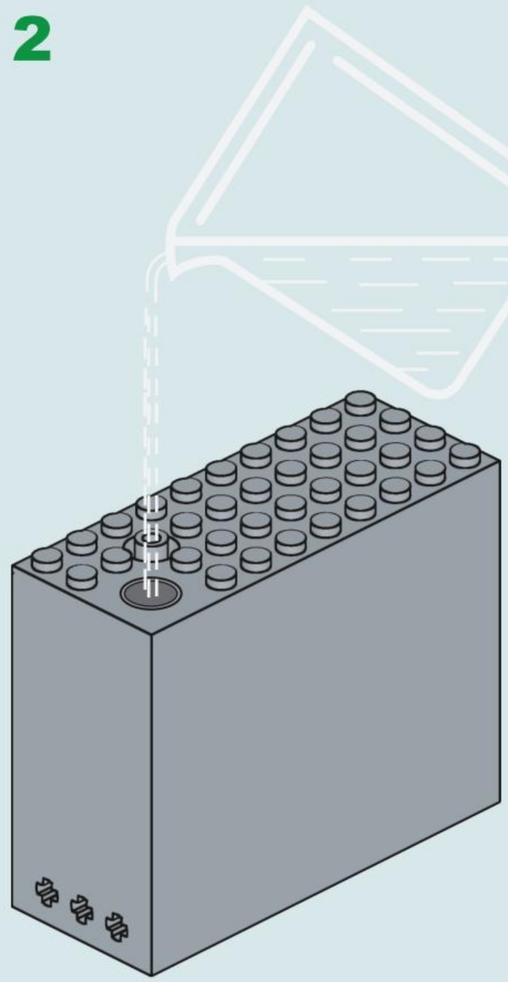

3

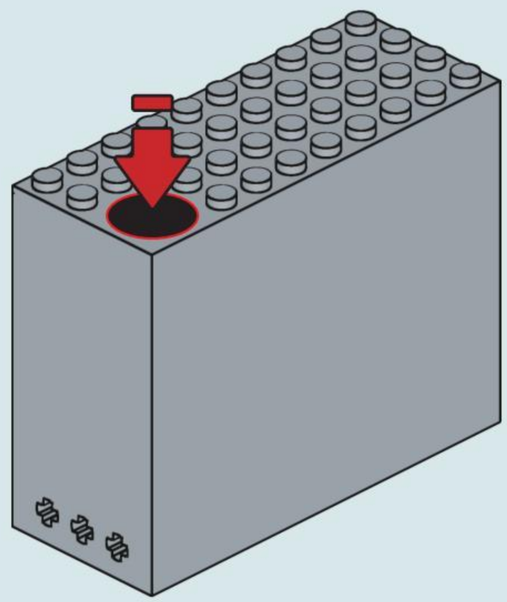

1

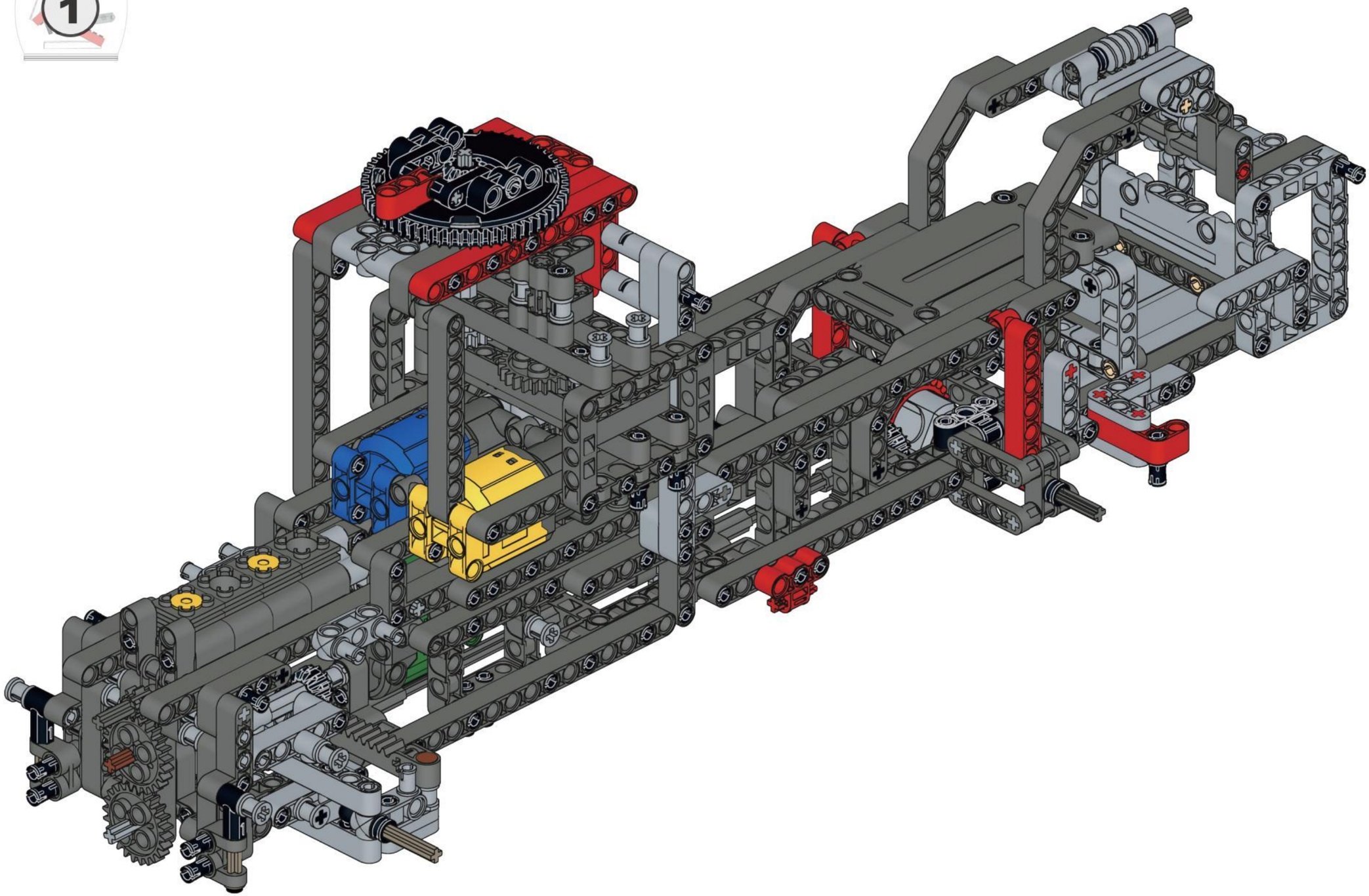

A

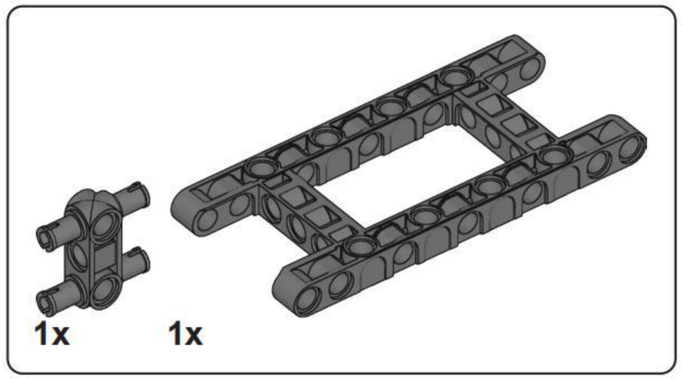


## A1

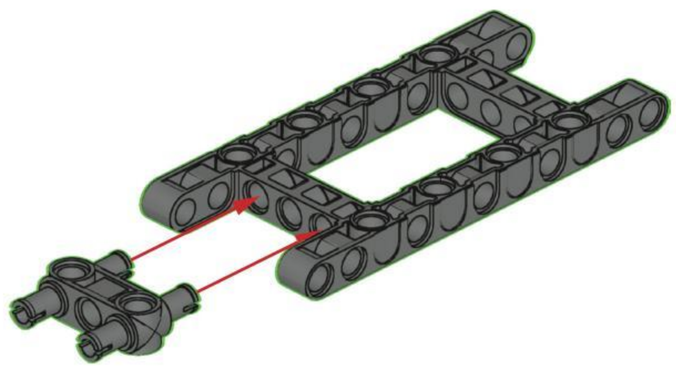

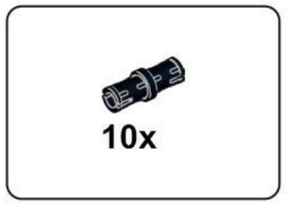


## A2

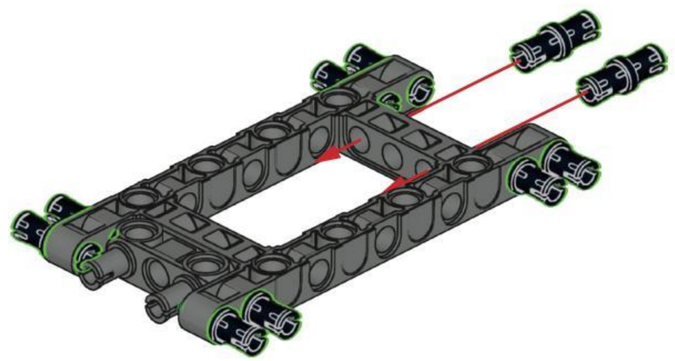

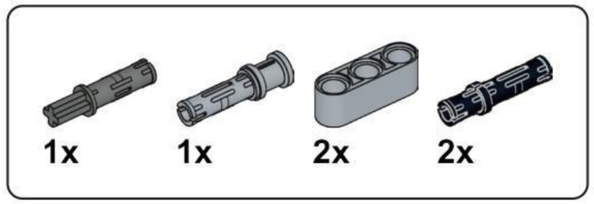


## A3

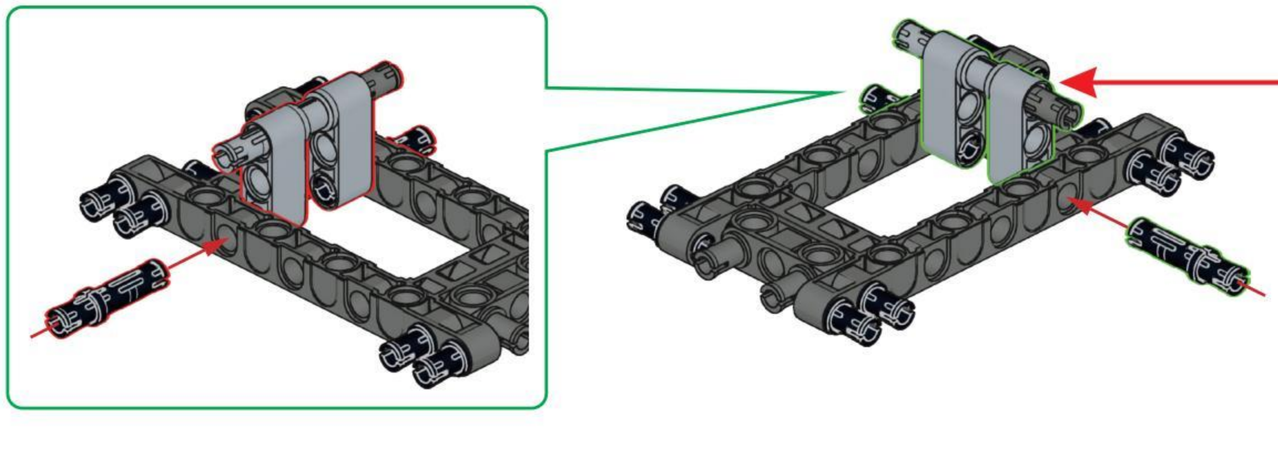

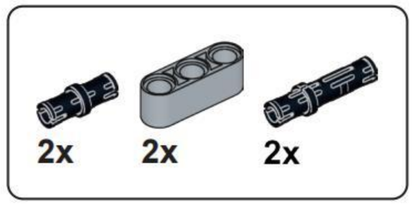


## A4

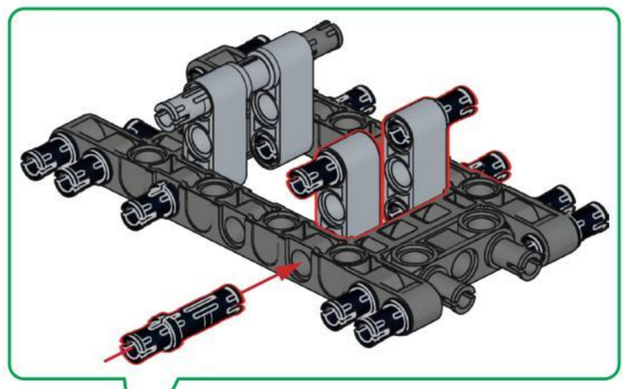

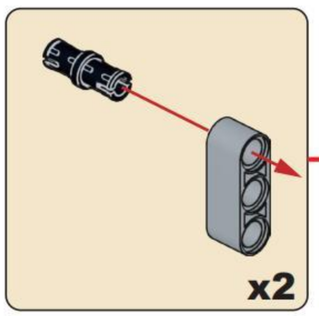


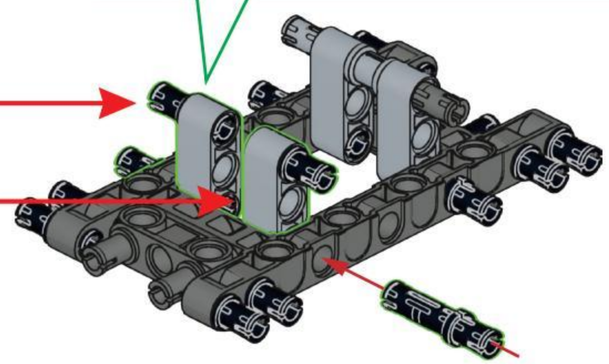

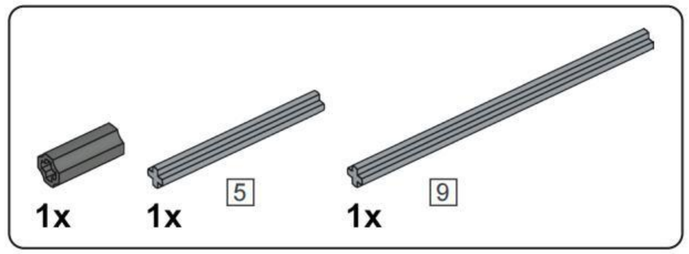


## A5

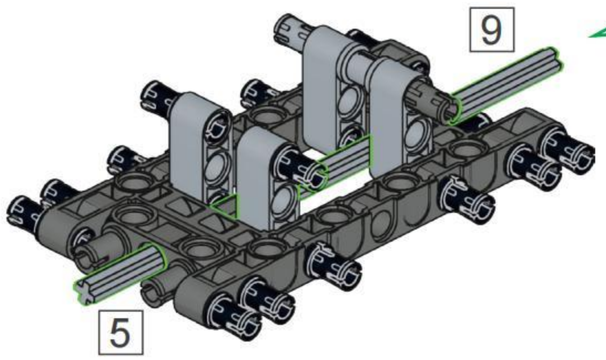


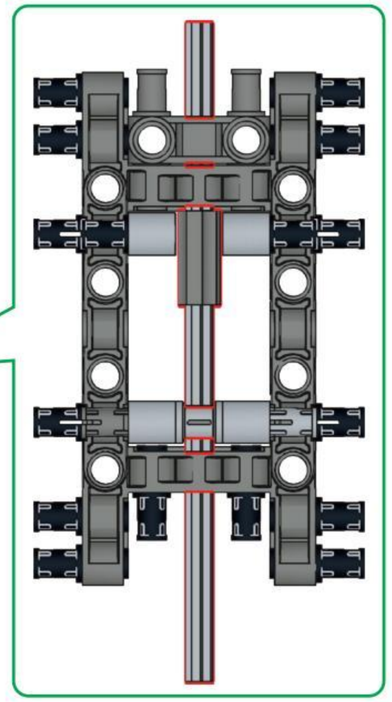

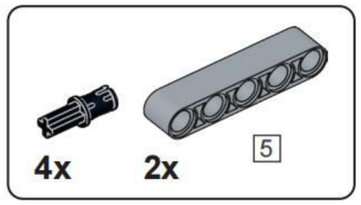


## A6

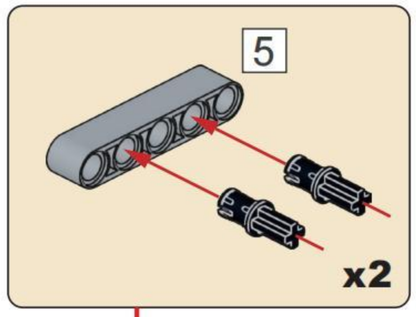


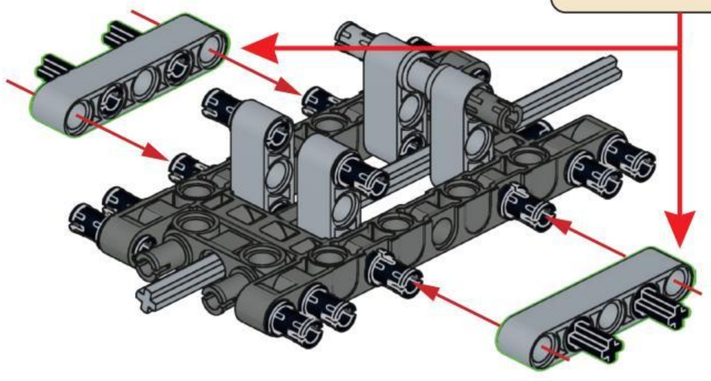

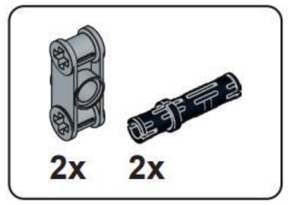


## A7

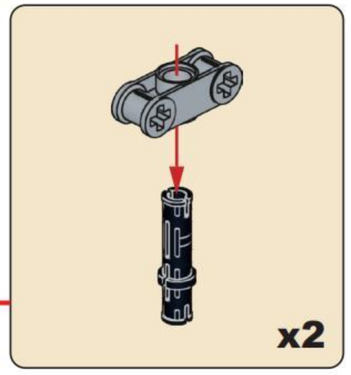


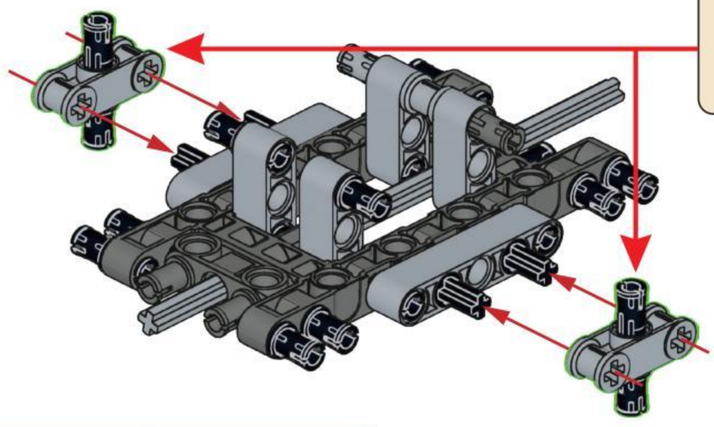

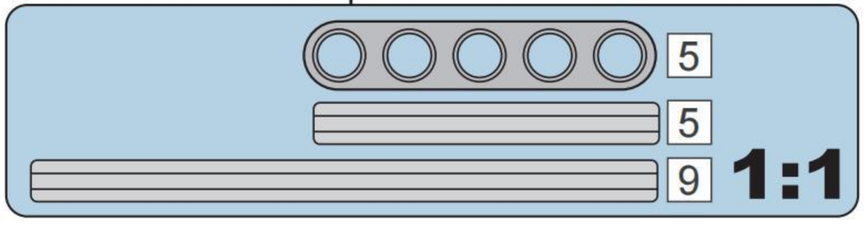

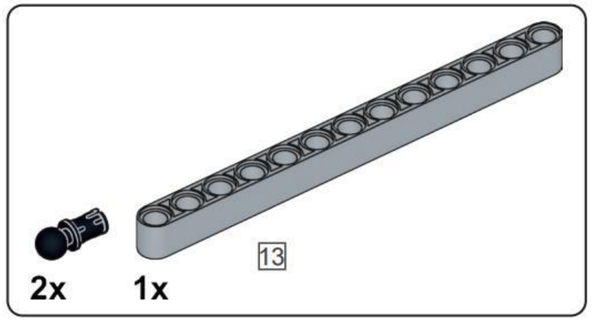


## A8

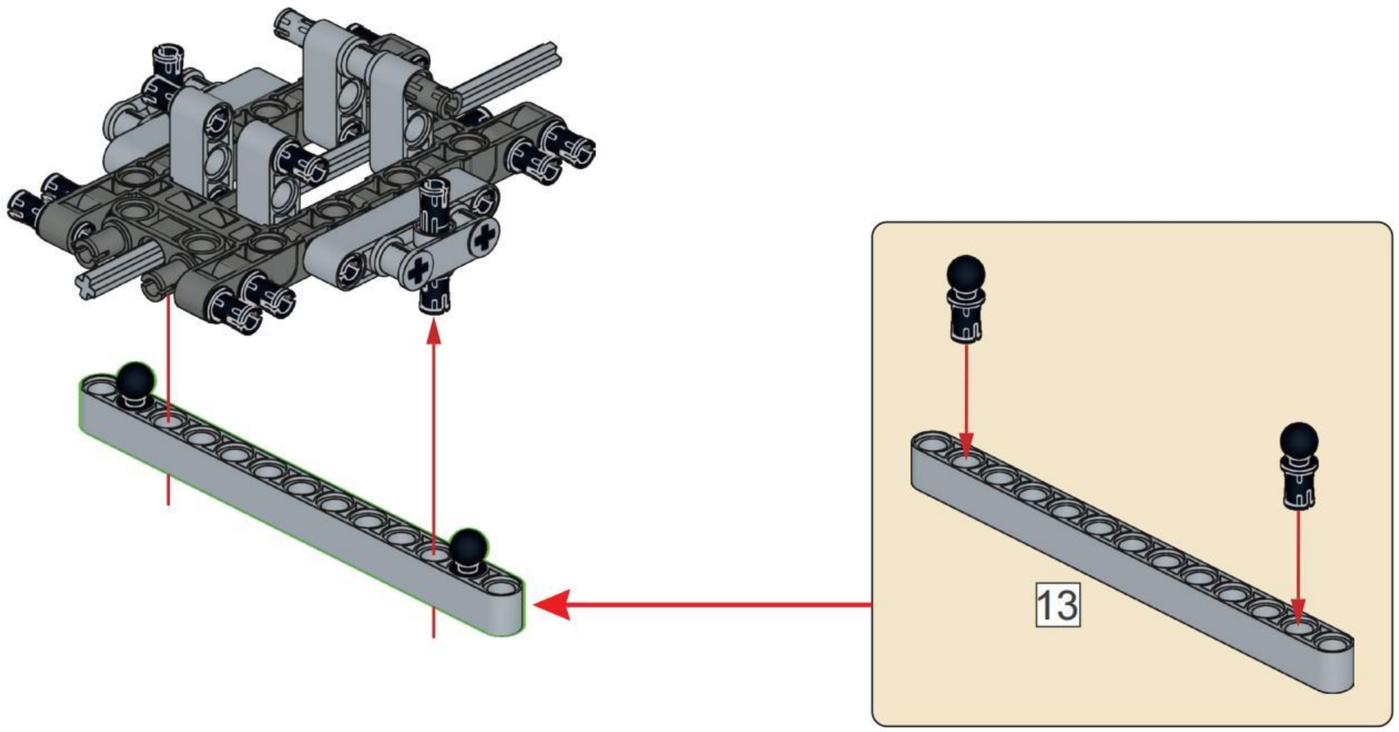


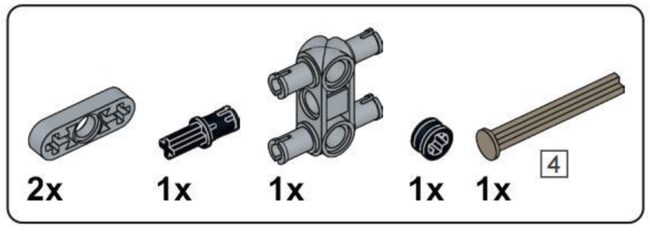


## A9

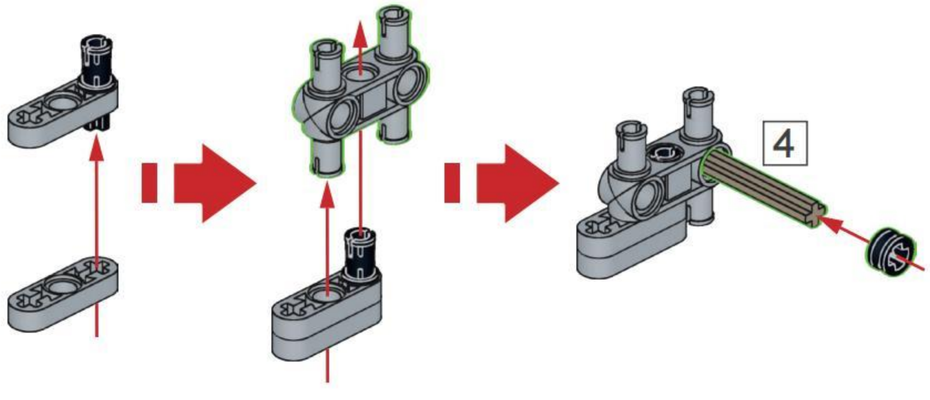


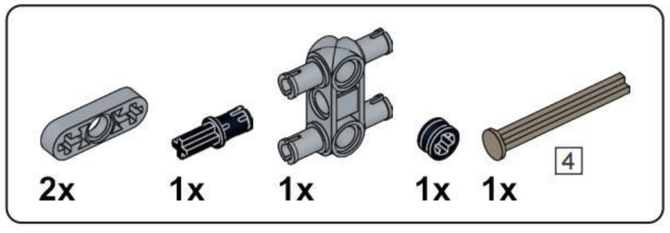


## A10

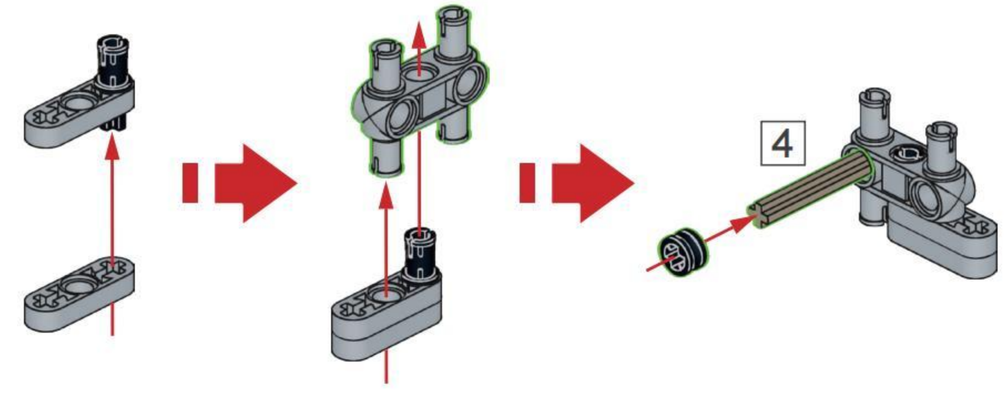


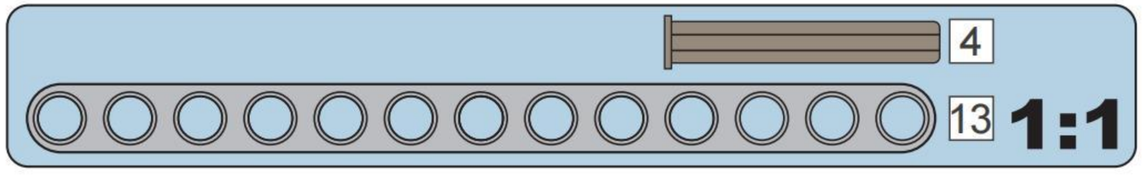

## A11

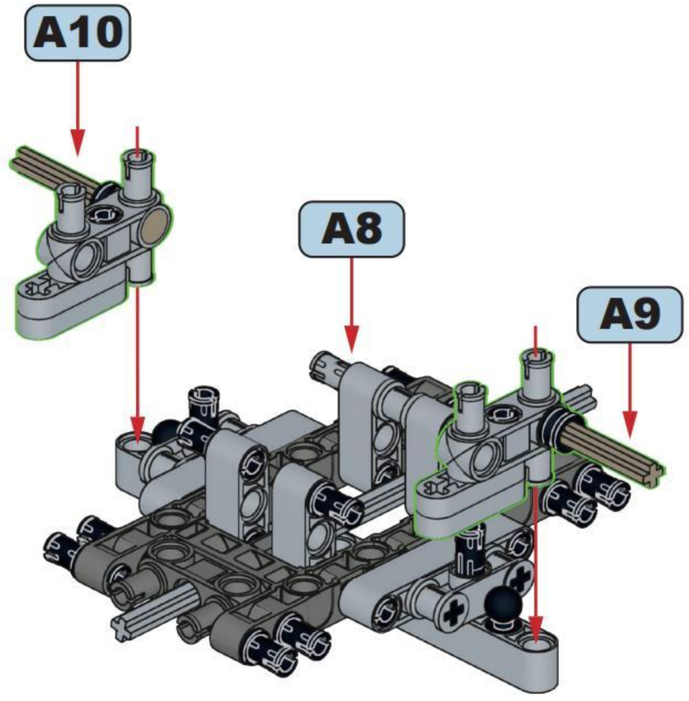


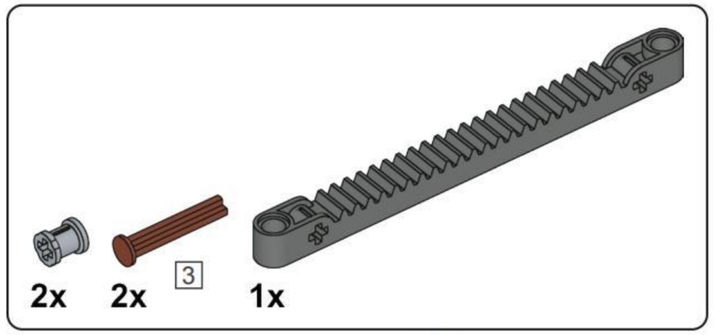


## A12

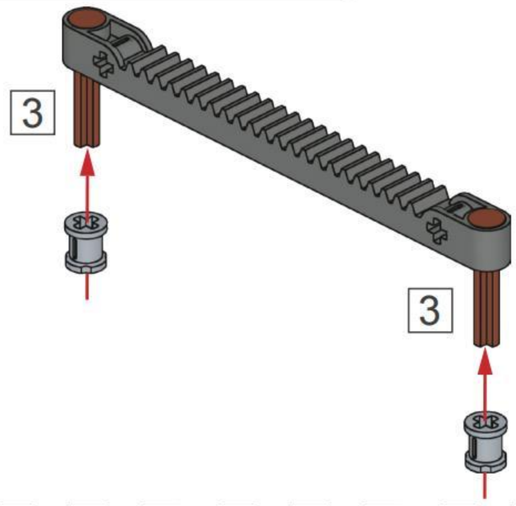


## A13

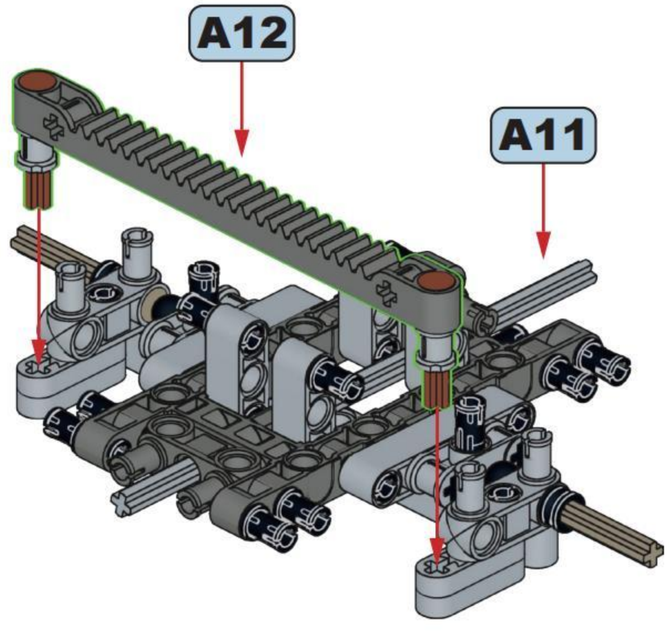


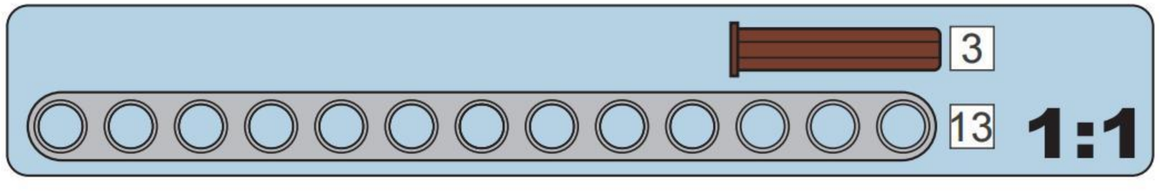


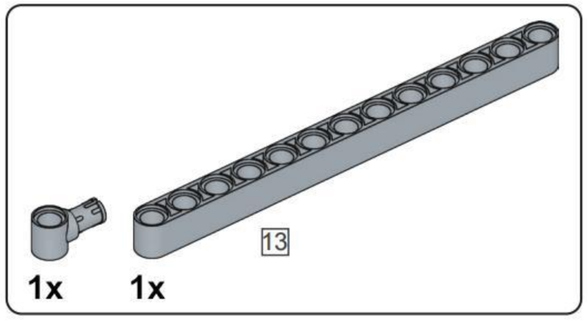


## A14

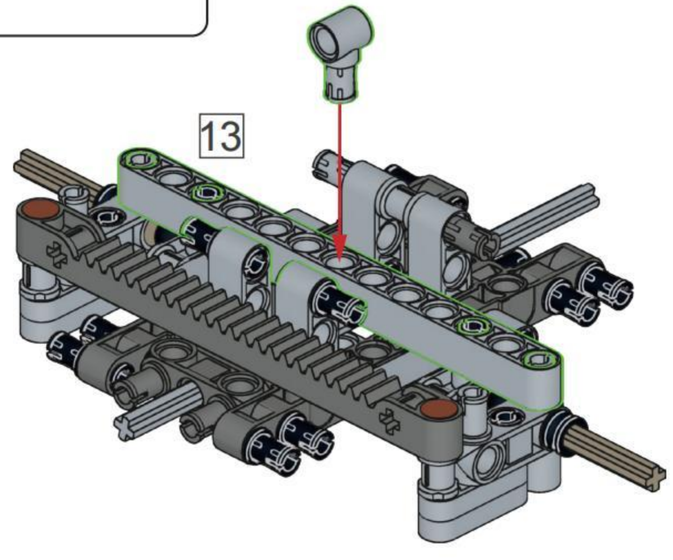

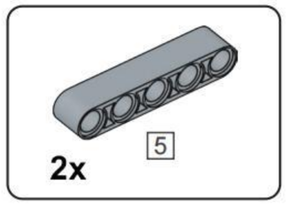


## A15

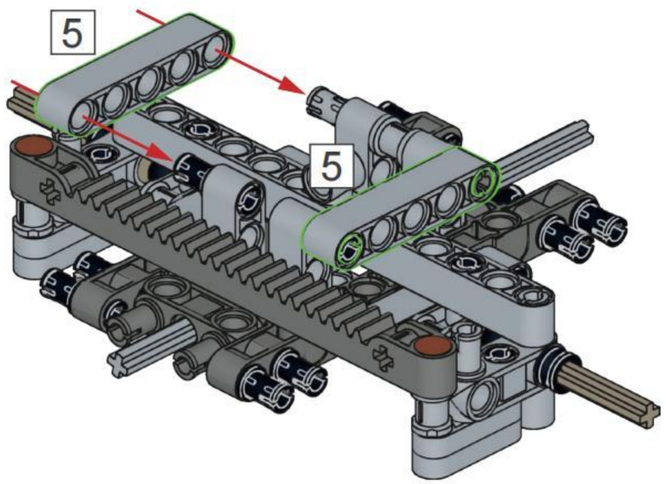


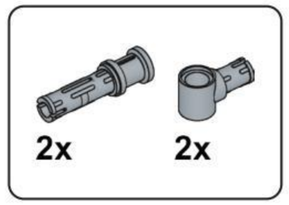


## A16

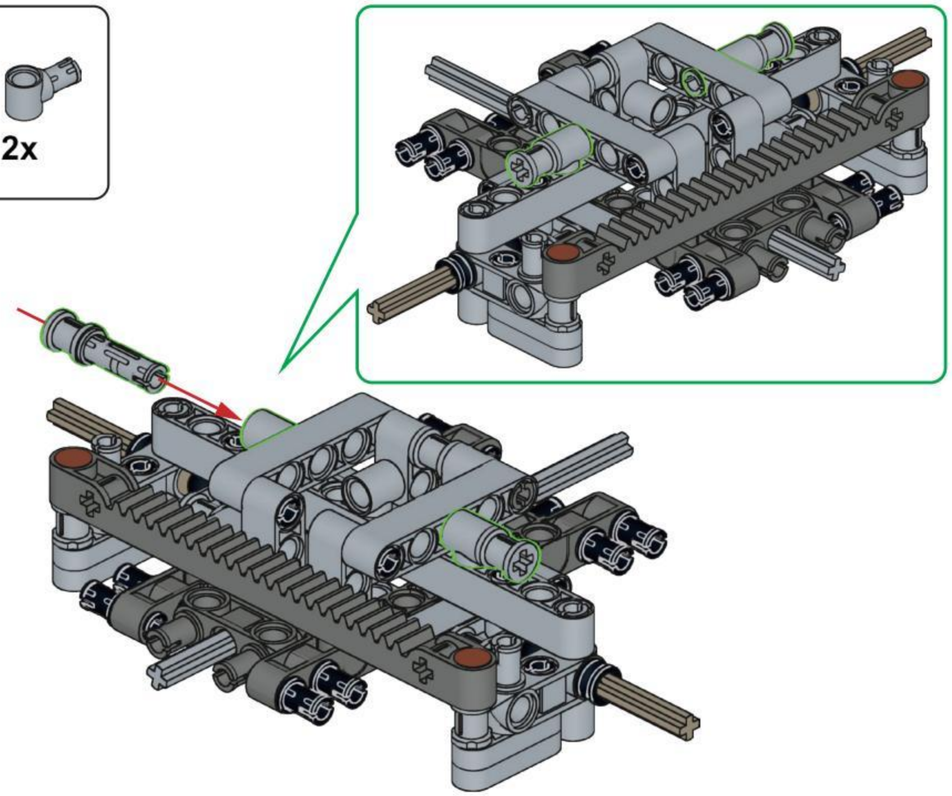

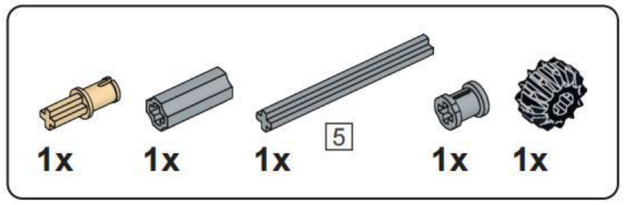


## A17

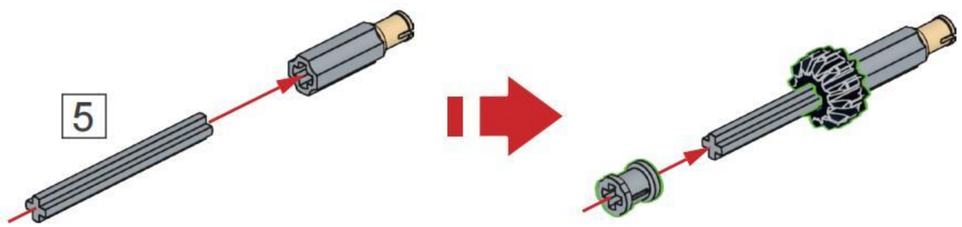


## A18

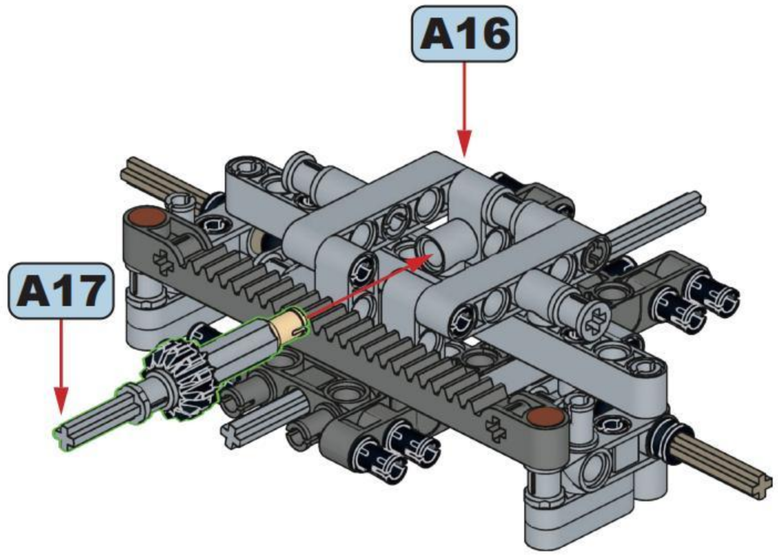


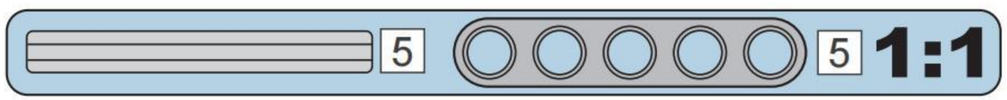

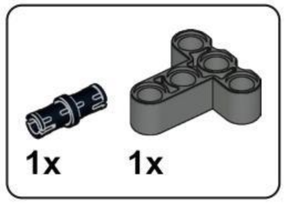


# A19

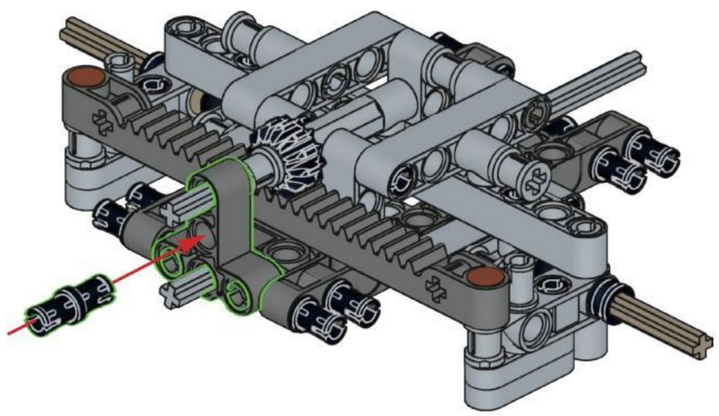

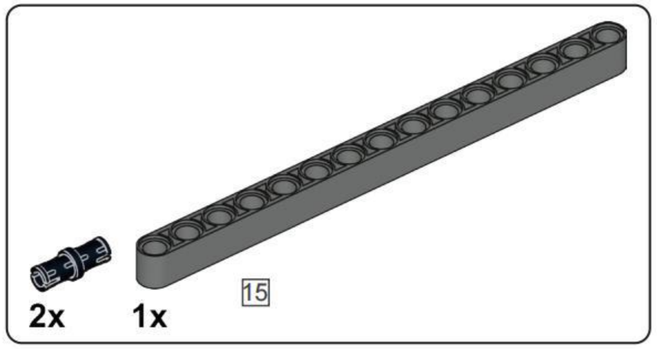


# A20

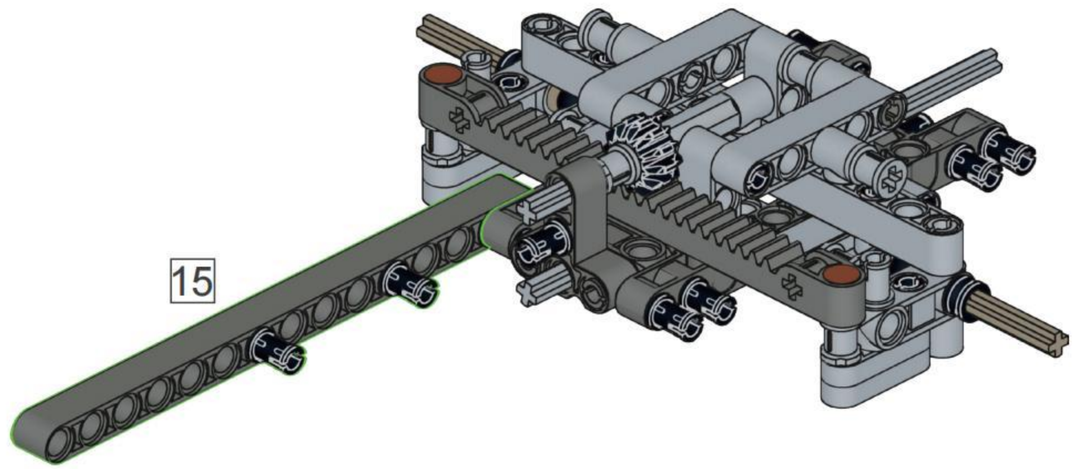


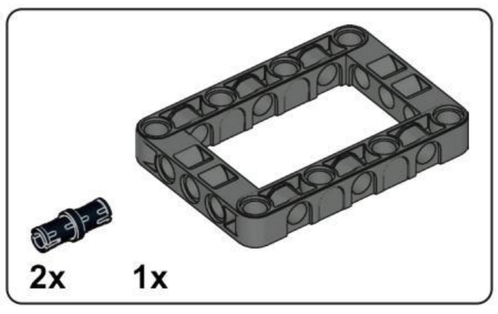


# A21

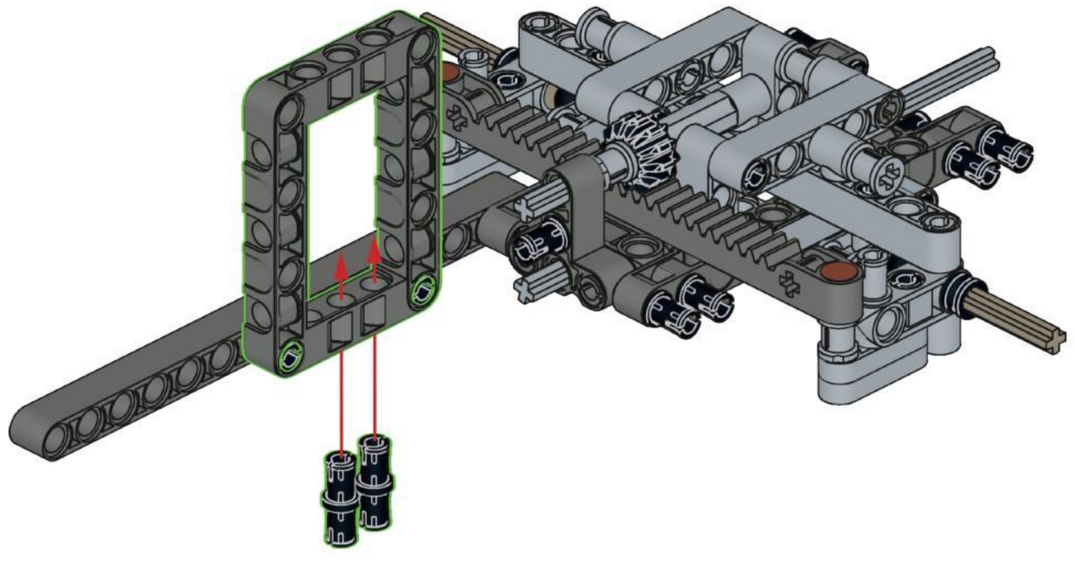

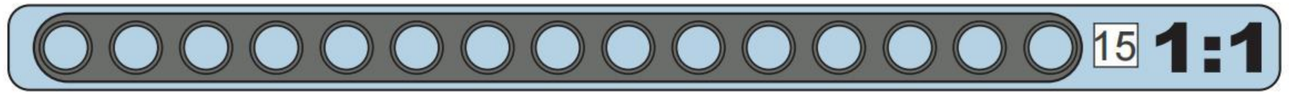

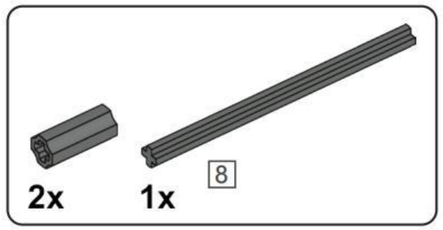


## A22

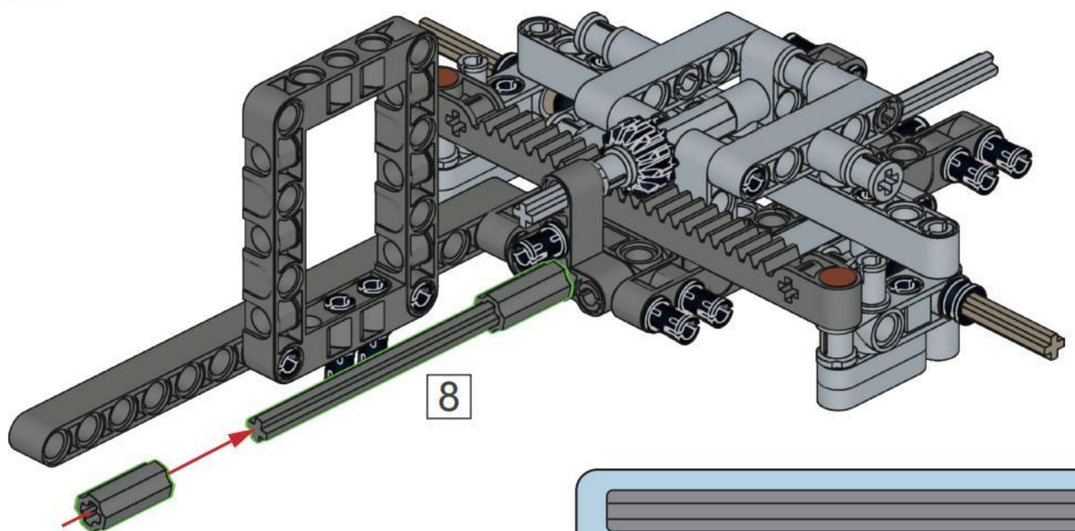


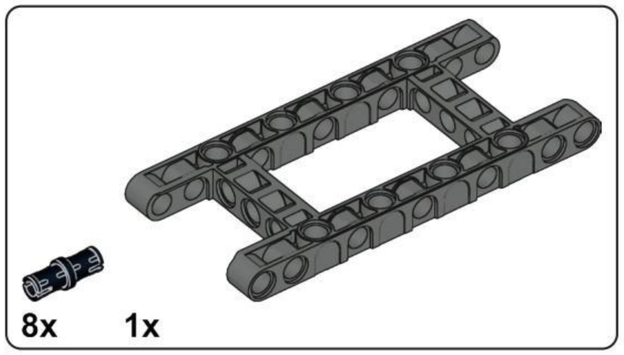


## A23

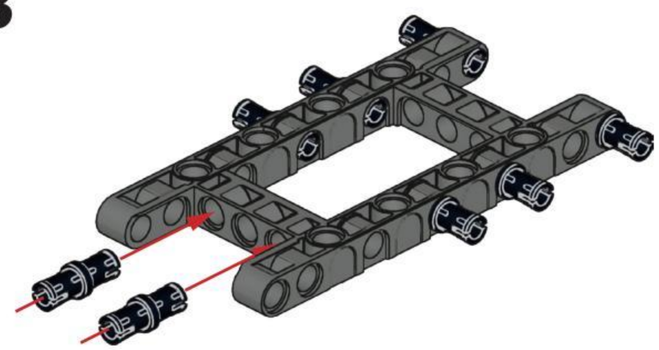

## A24

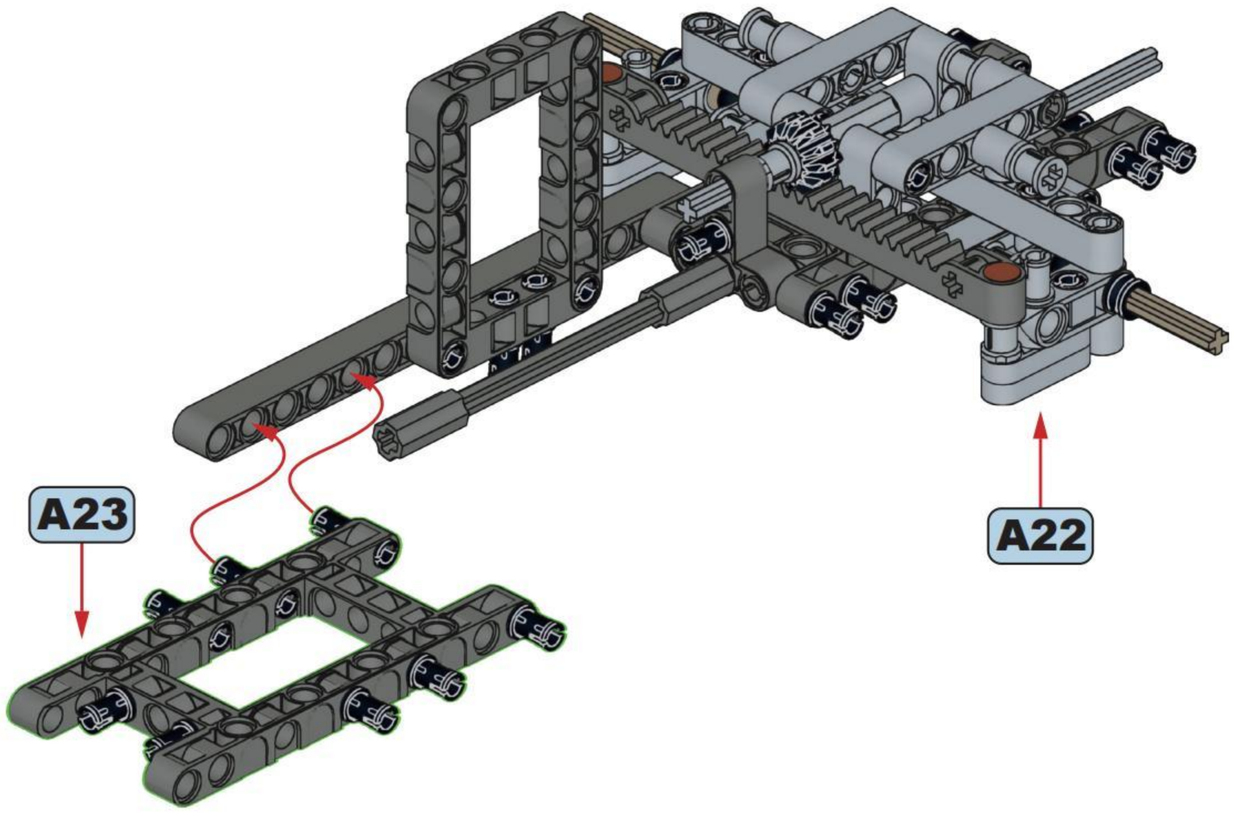

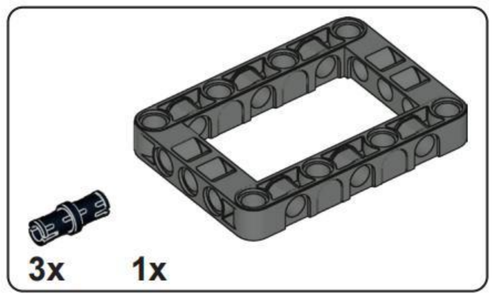


## A25

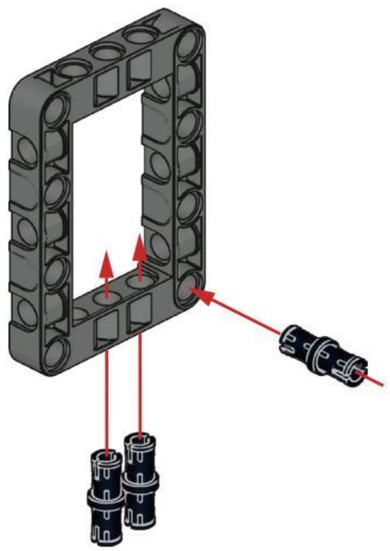

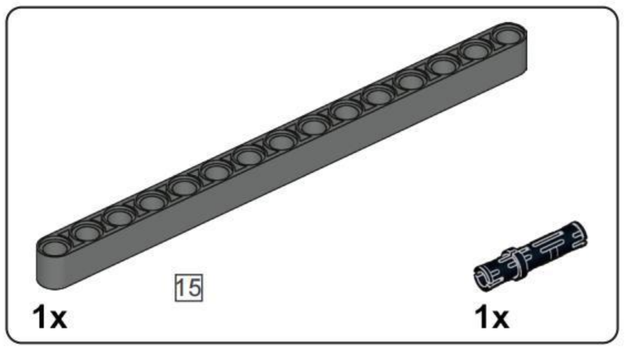


## A26

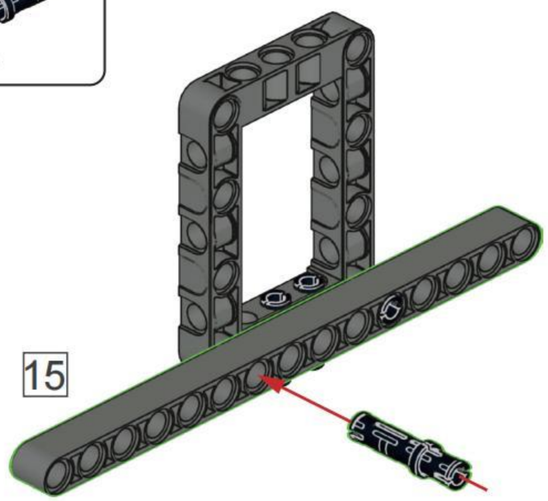


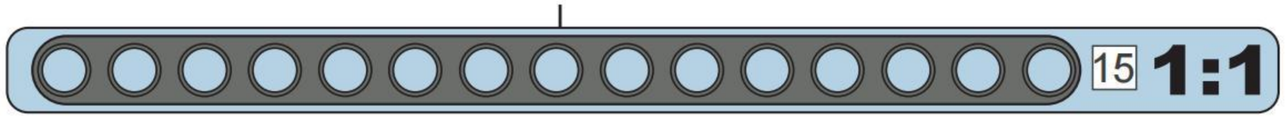


## A27

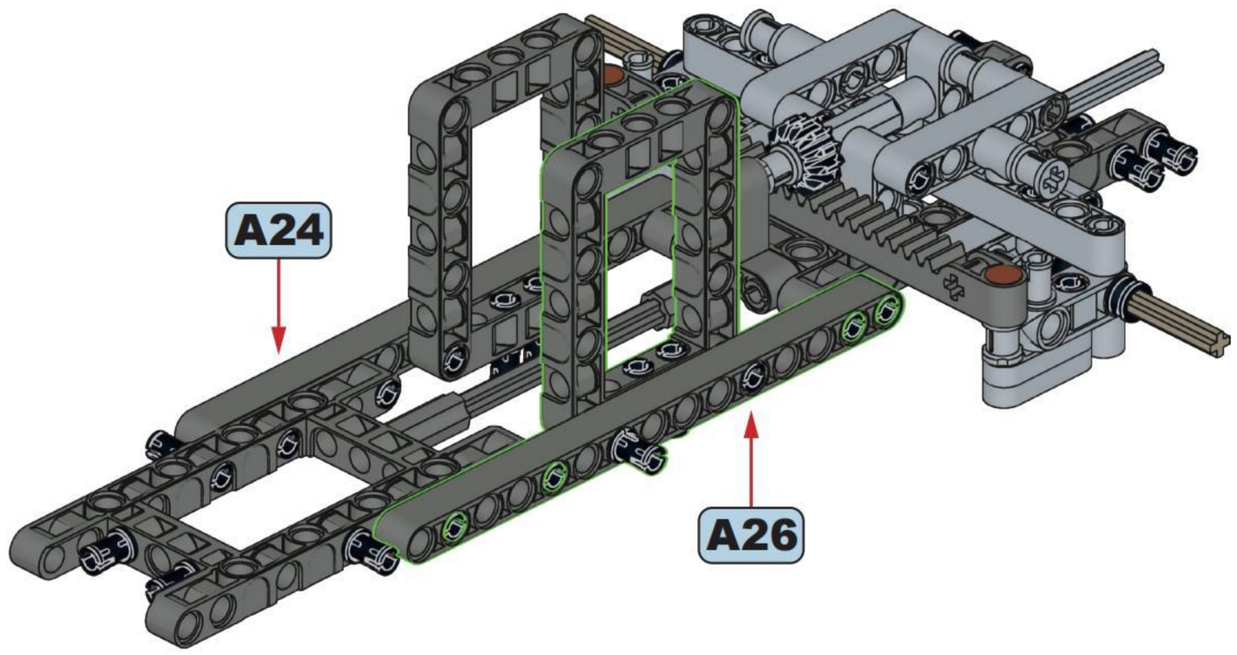

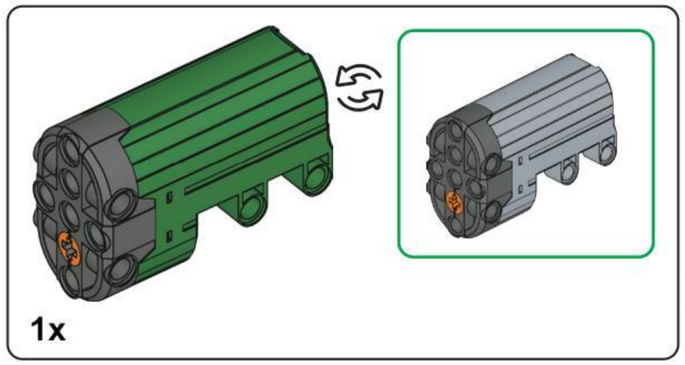


# A28

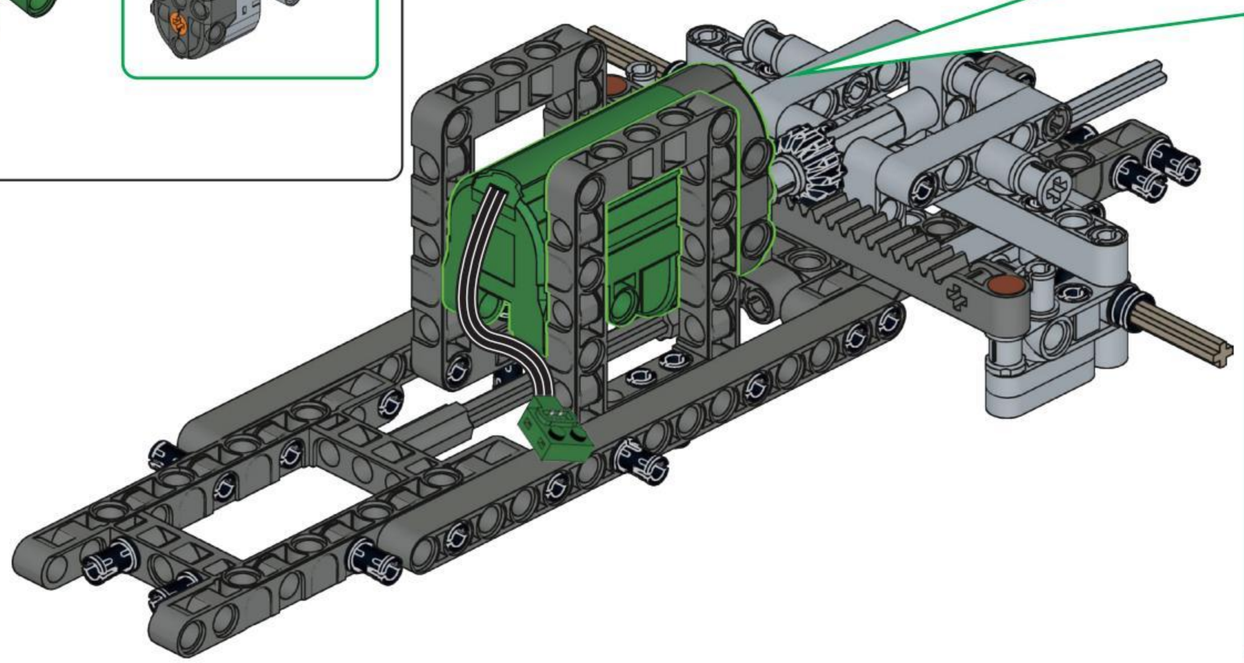

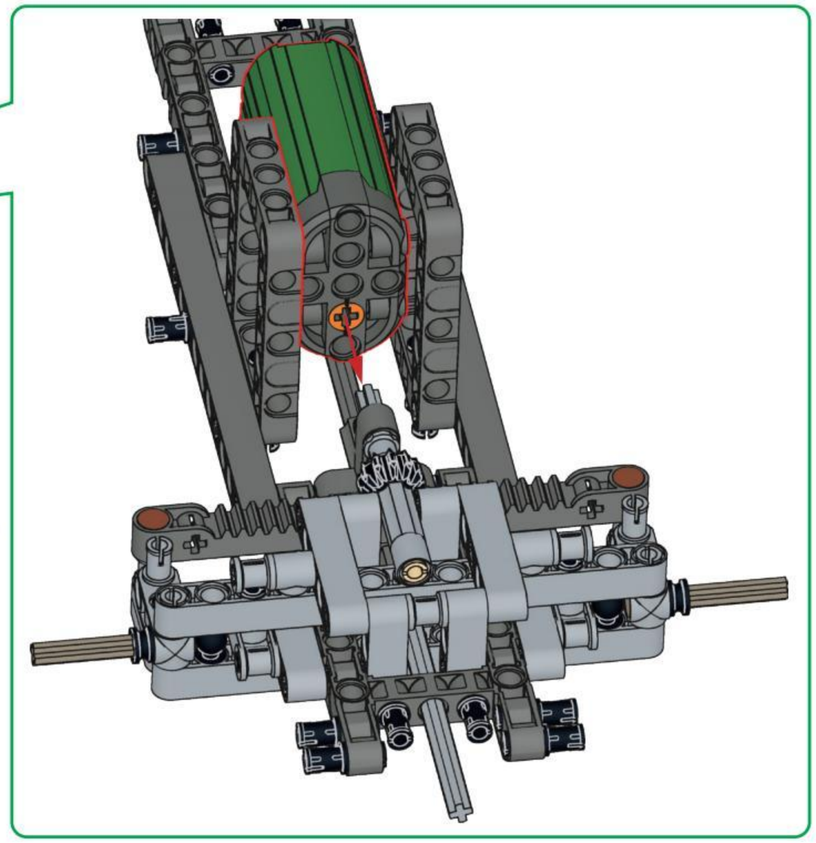

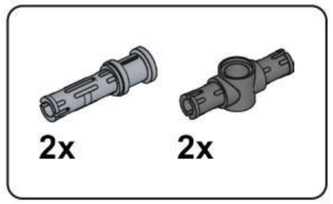


# A29

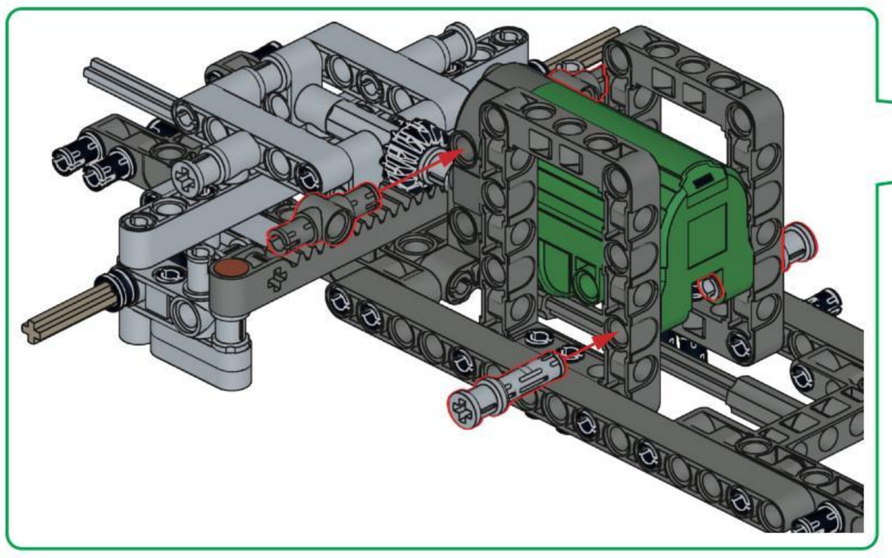

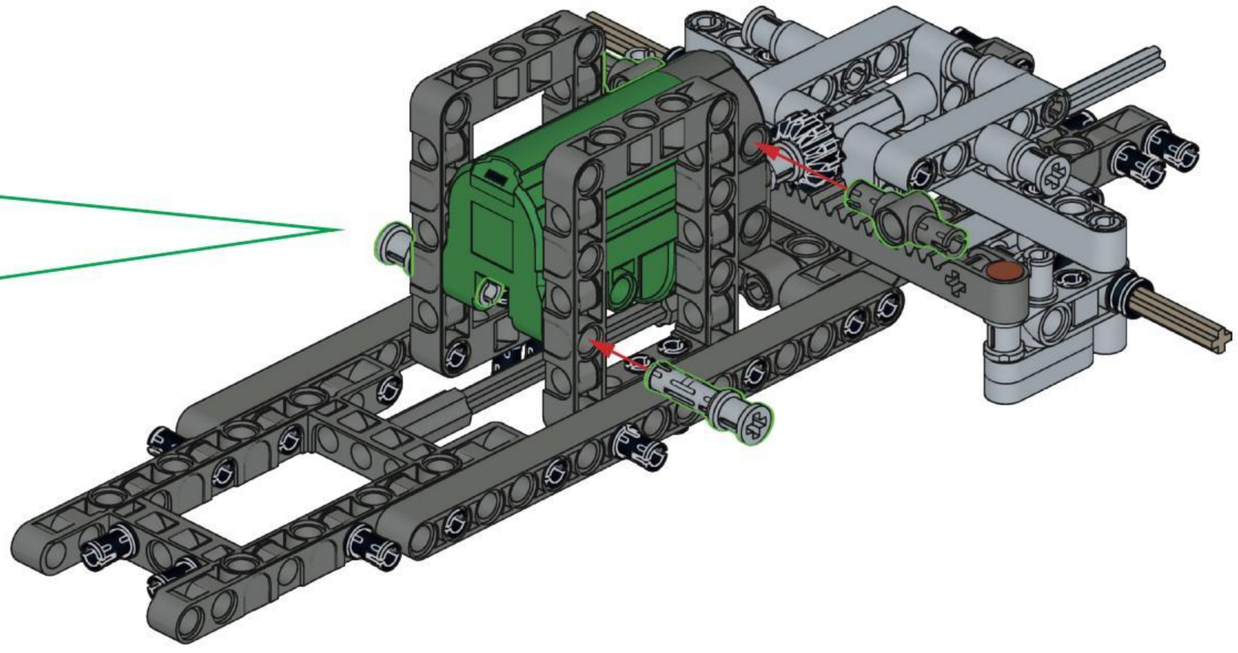

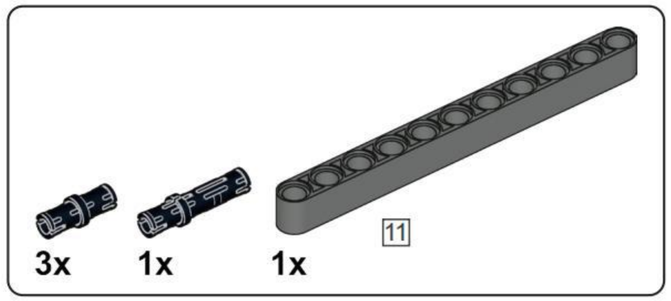


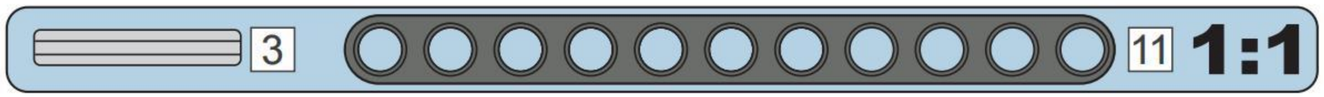


## A30

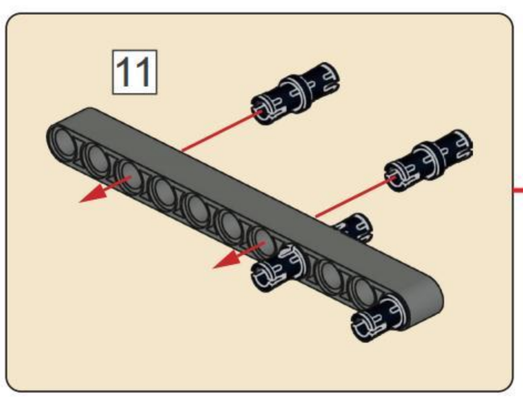


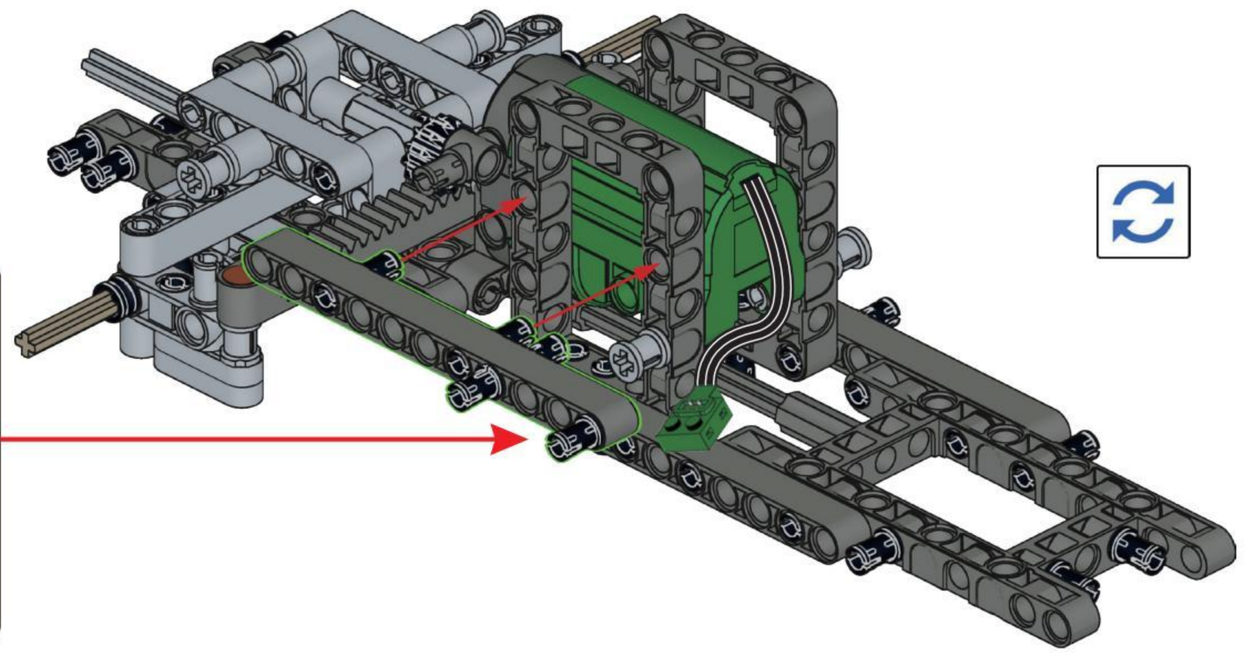

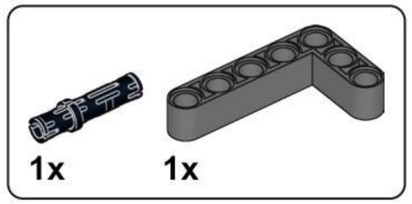


## A31

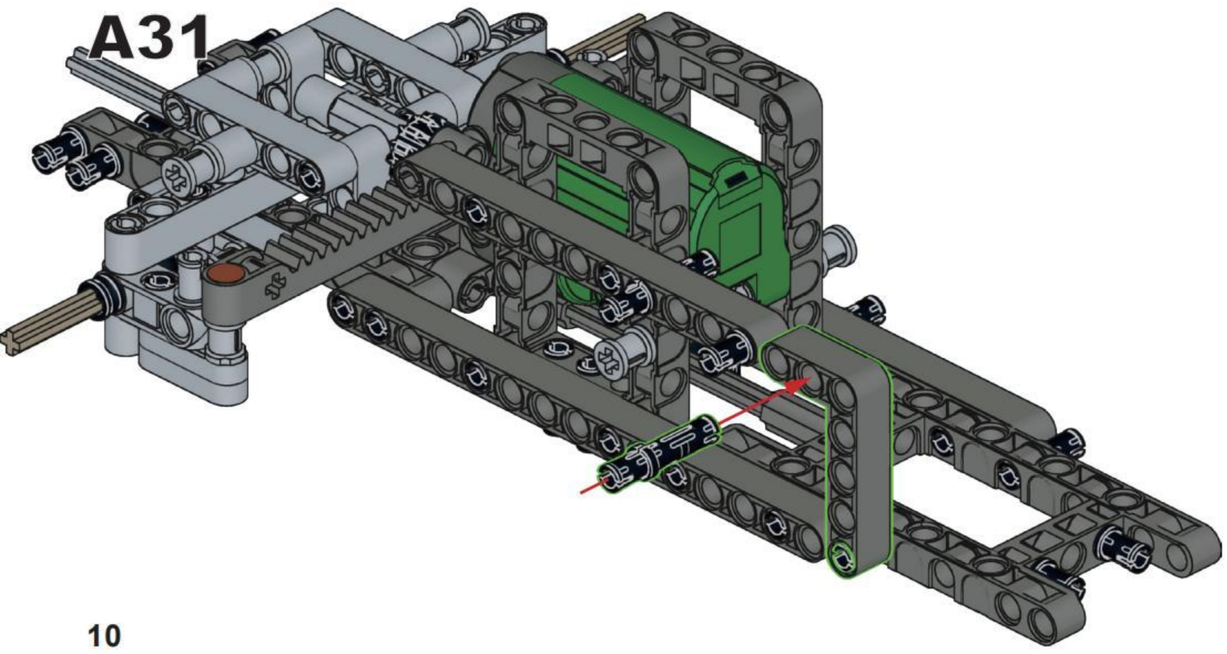

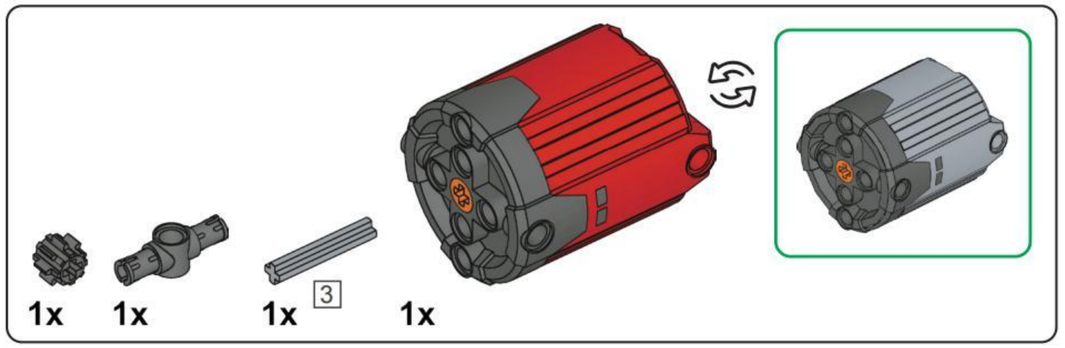


## A32

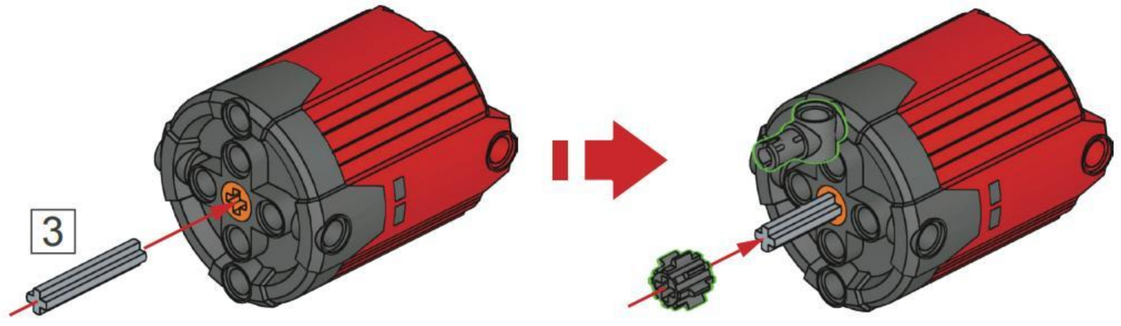

## A33

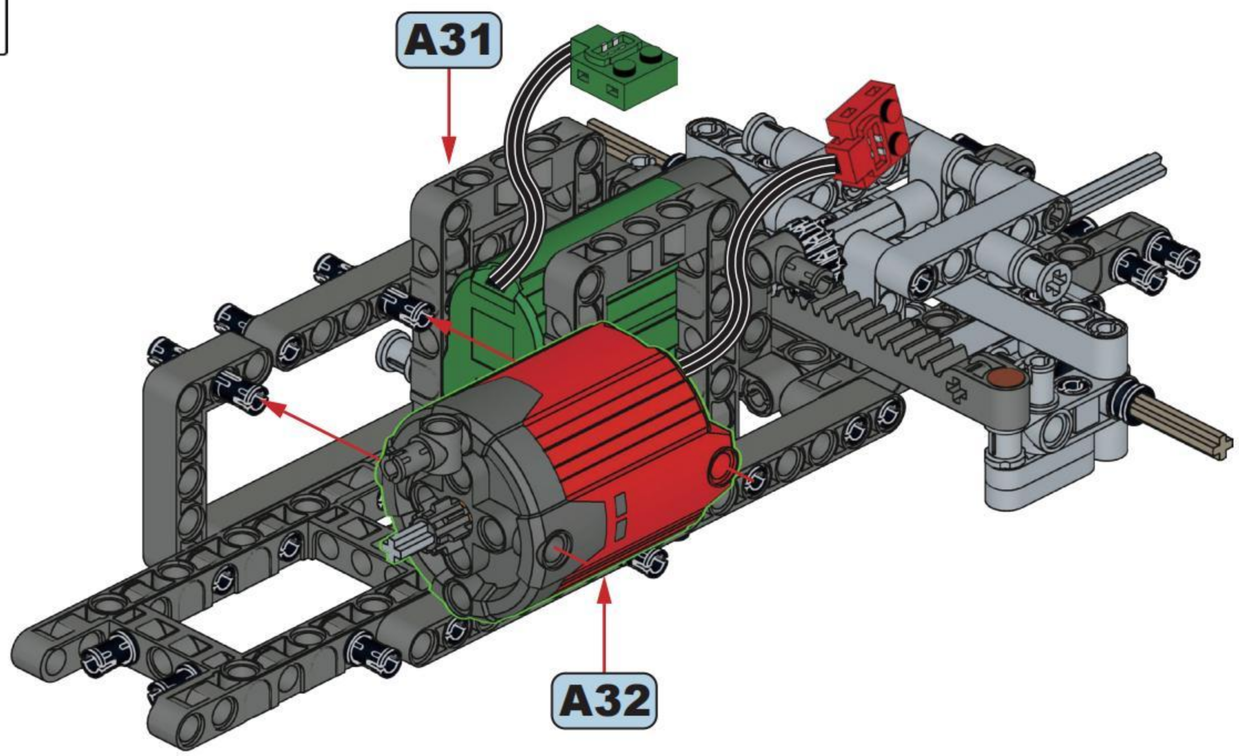


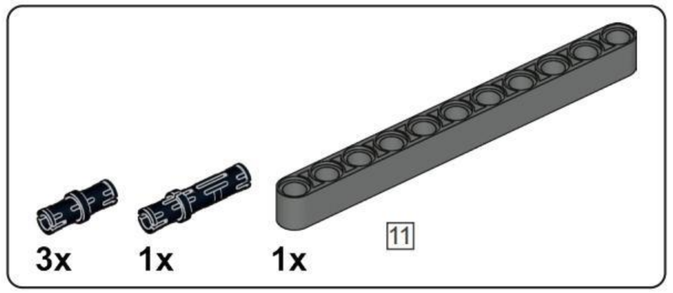


## A34

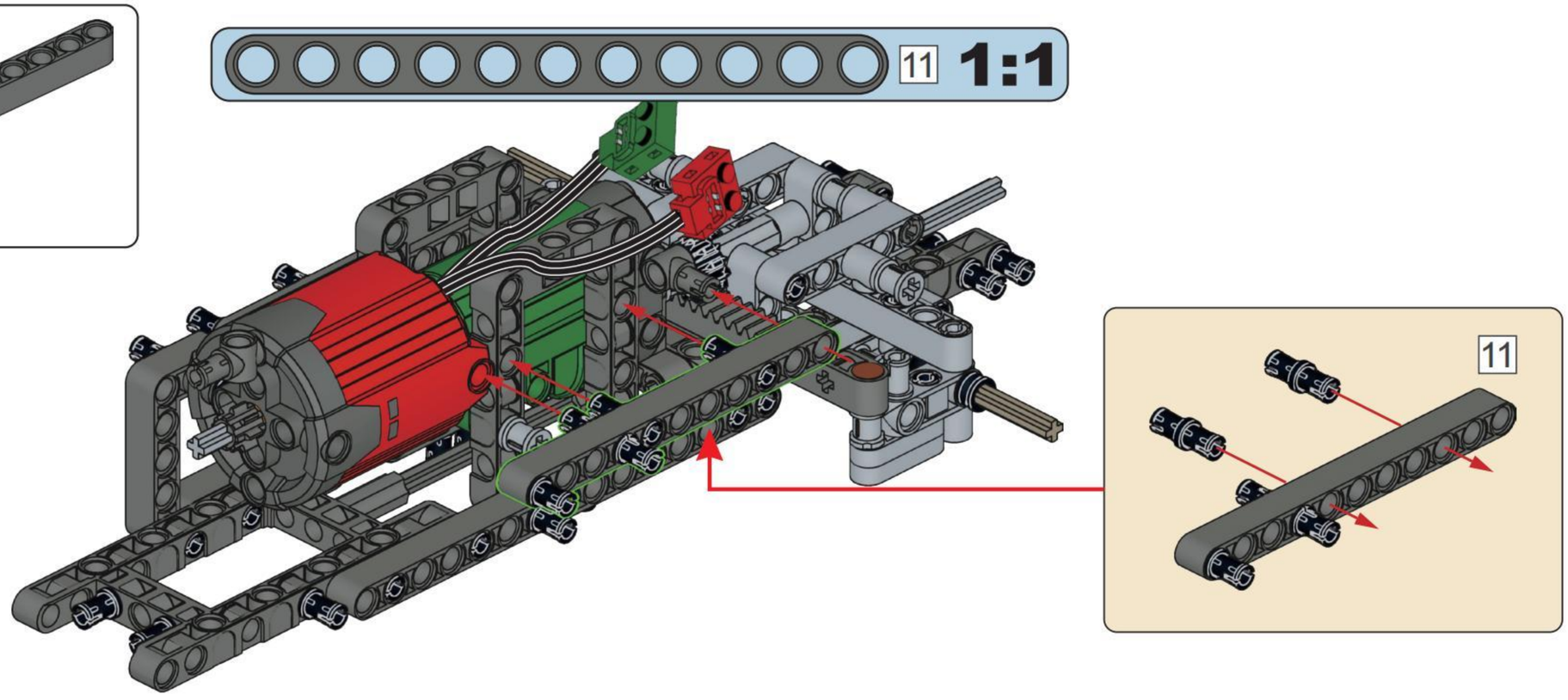

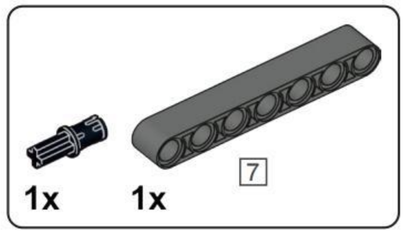


# A35

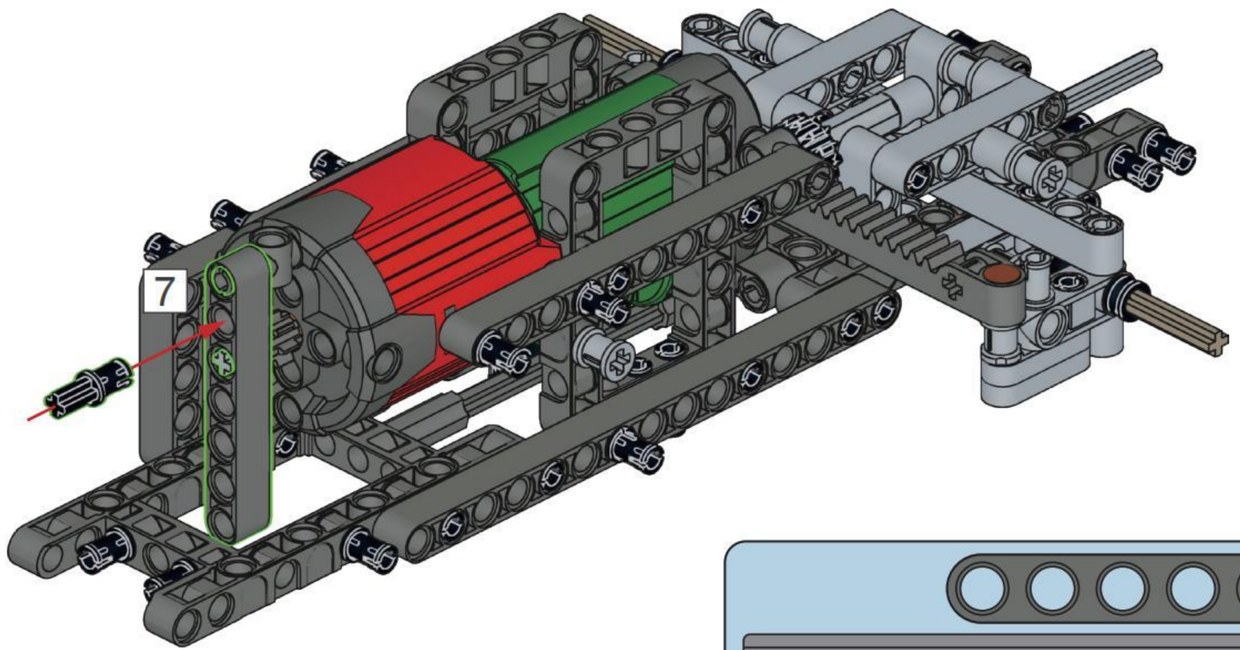


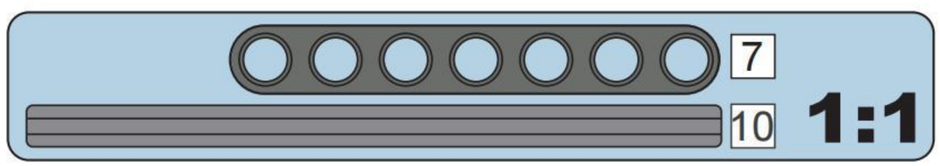


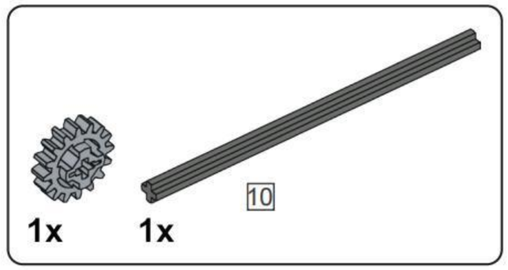


# A36

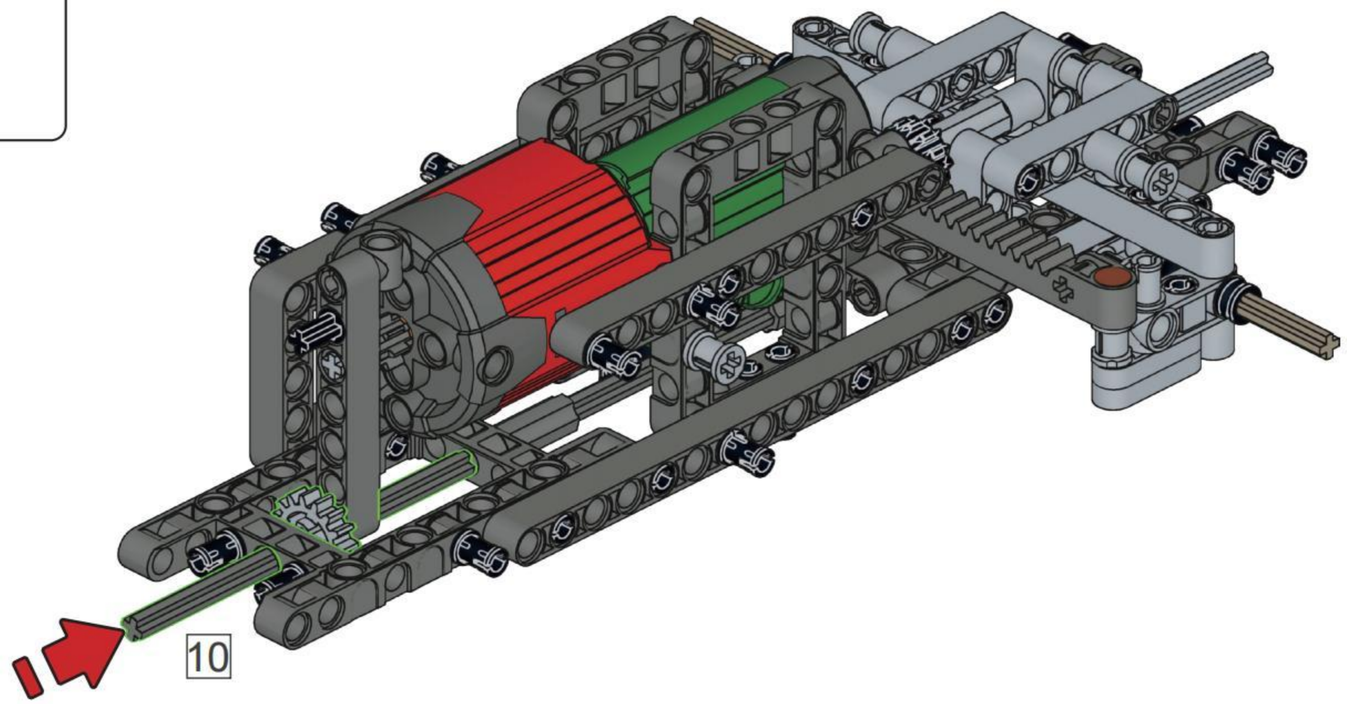

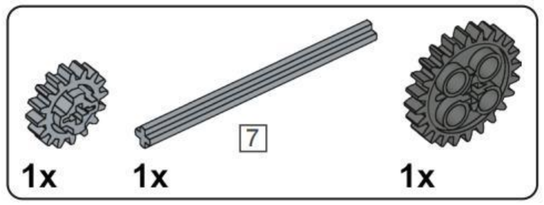


# A37

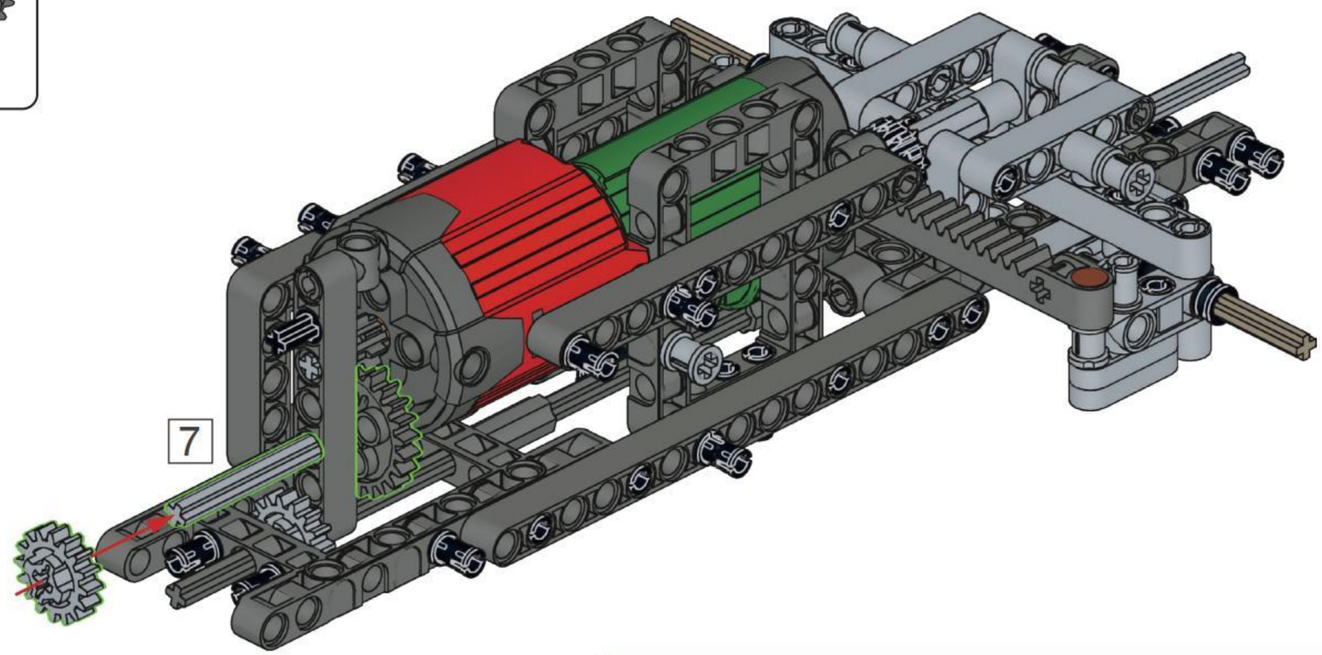


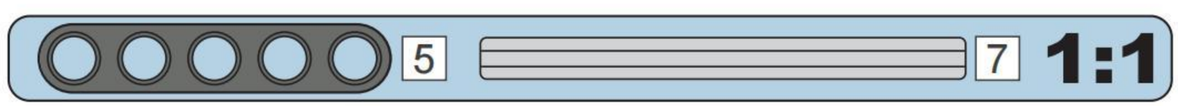


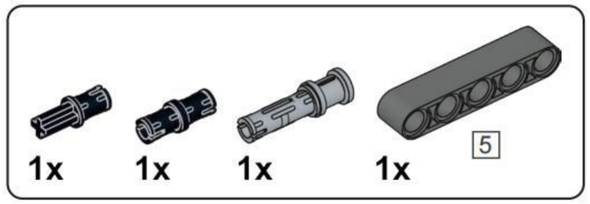


# A38

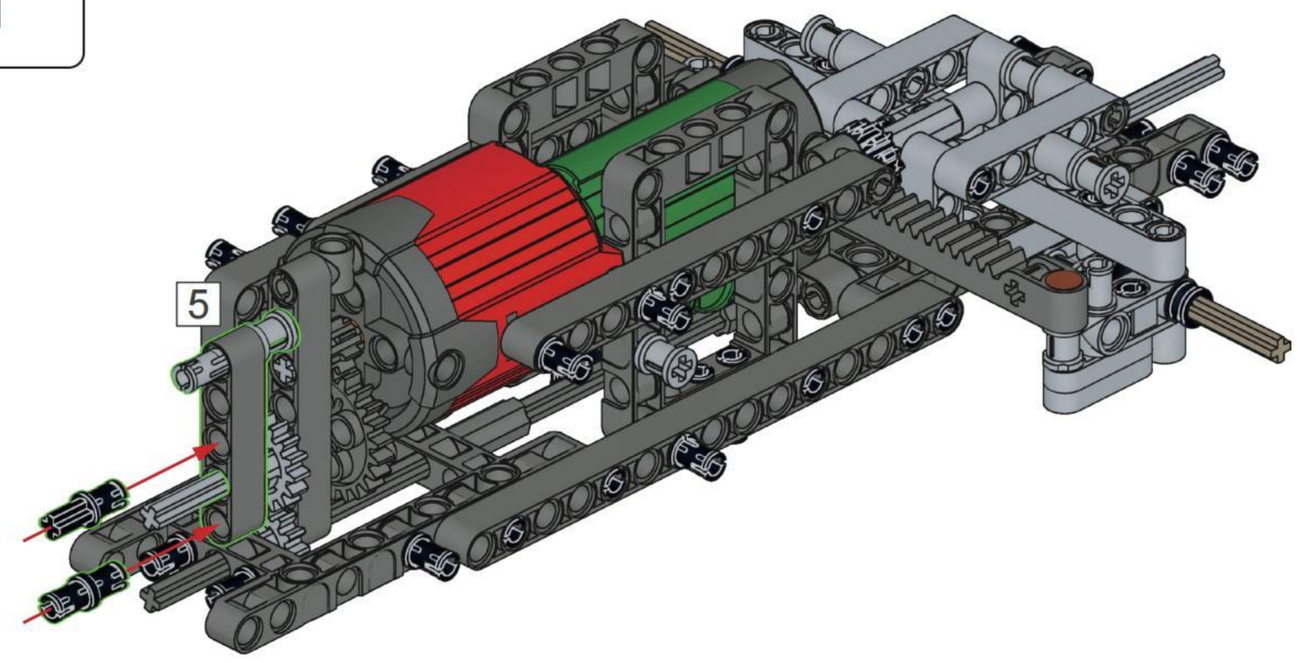

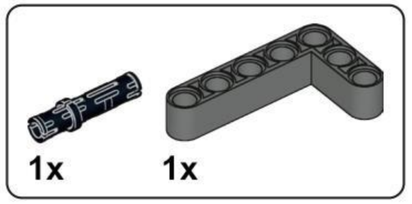


## A39

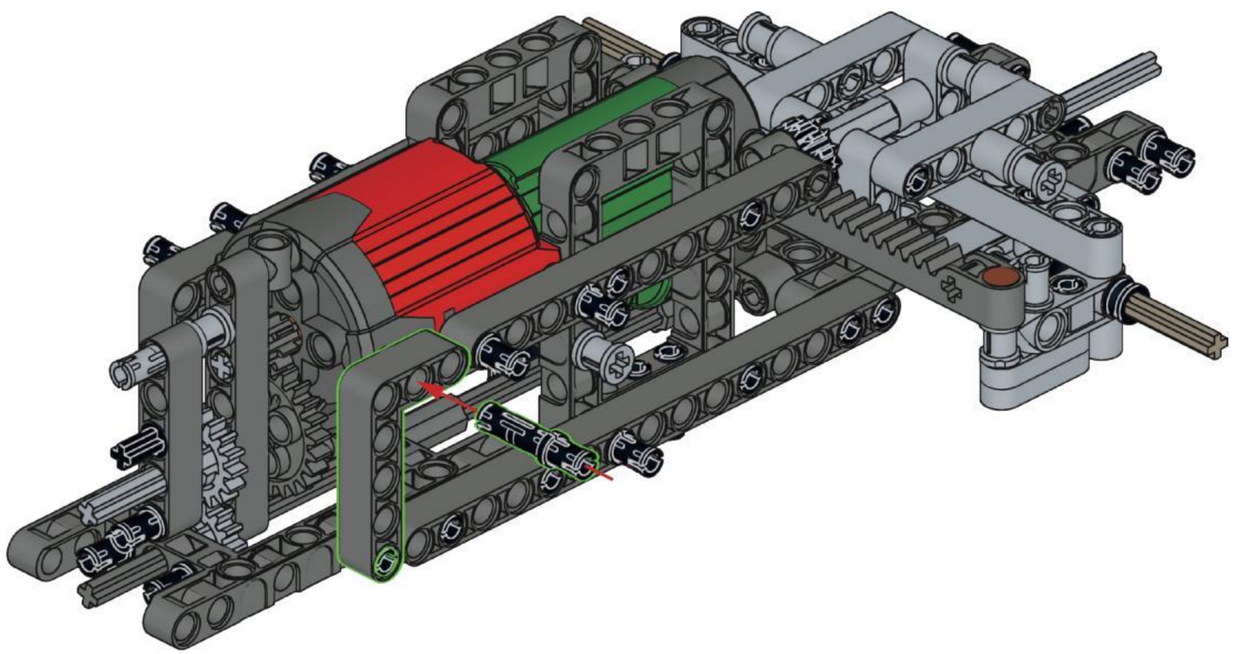

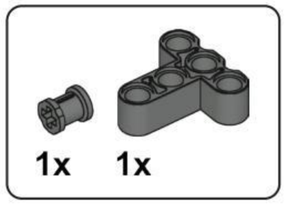


## A40

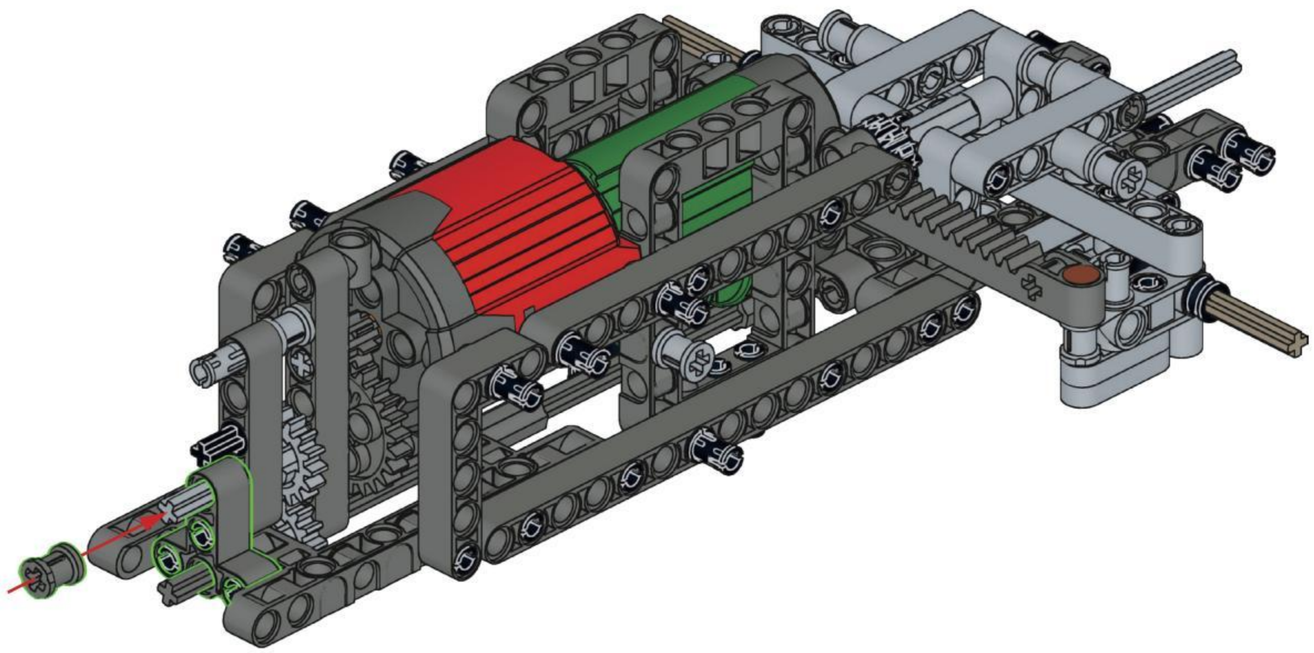

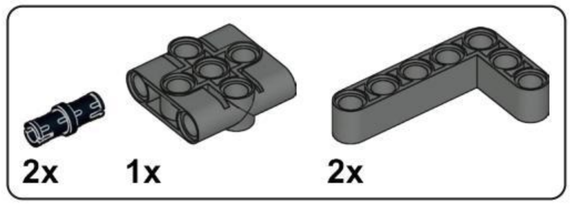


## A41

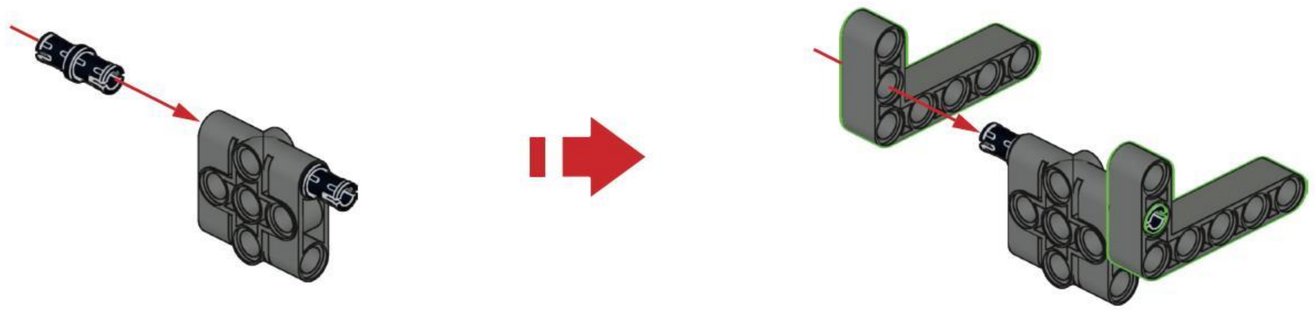

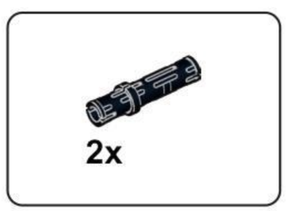


## A42

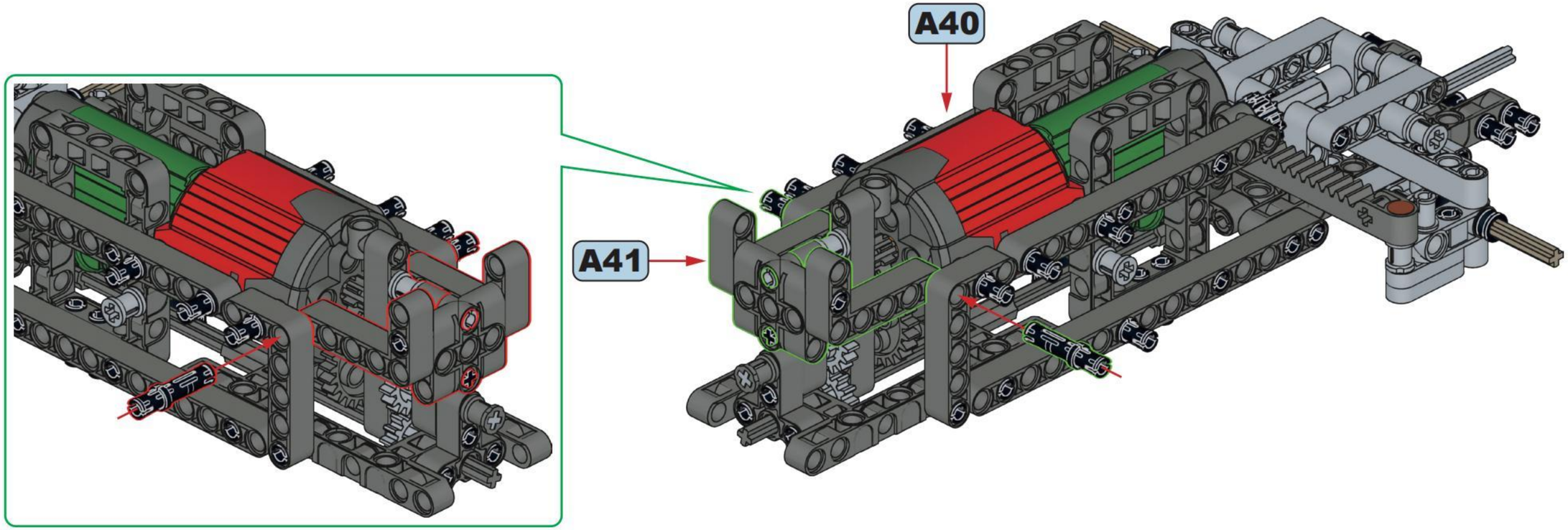

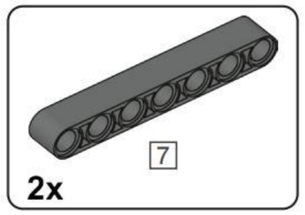


## A43

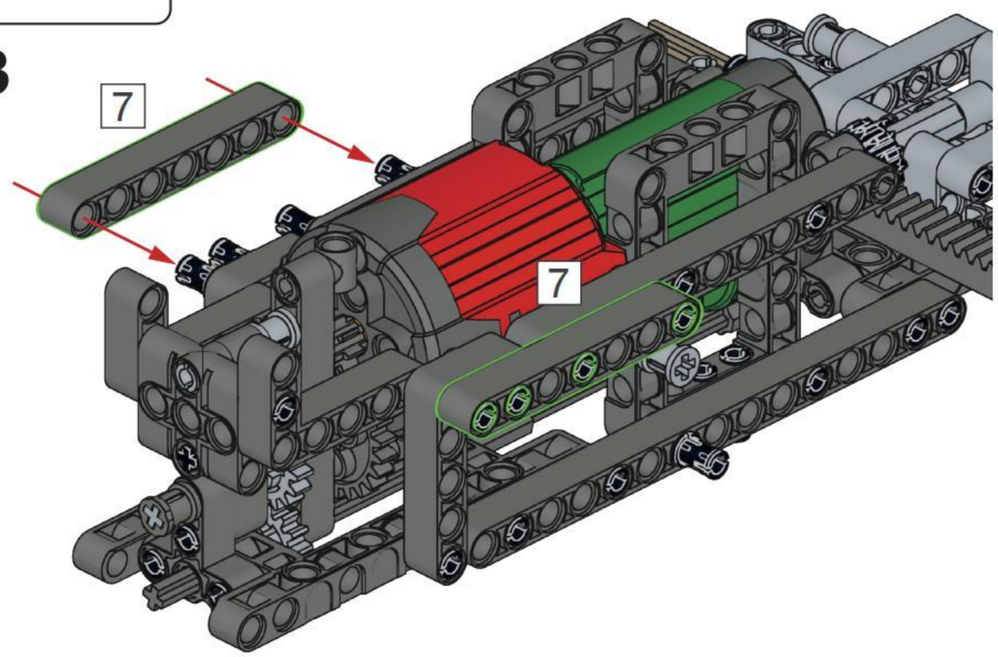


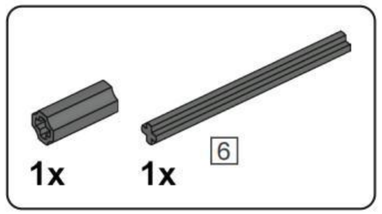


## A44

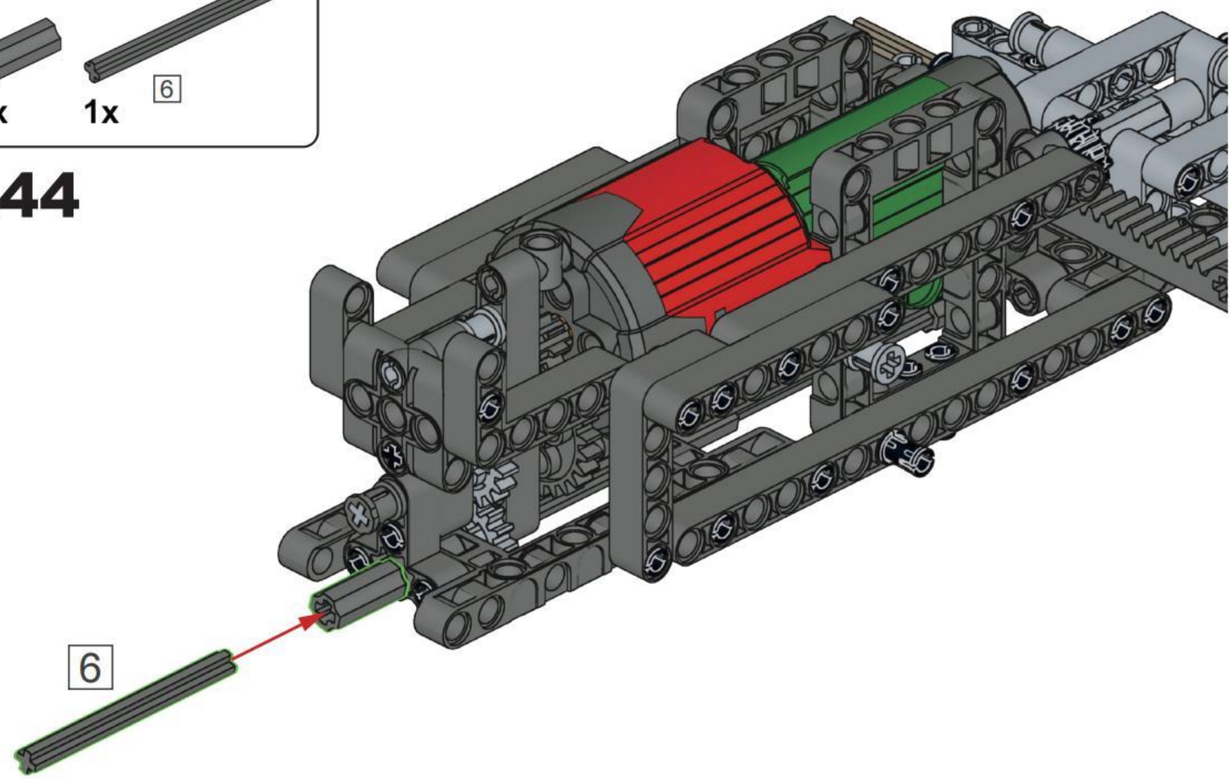


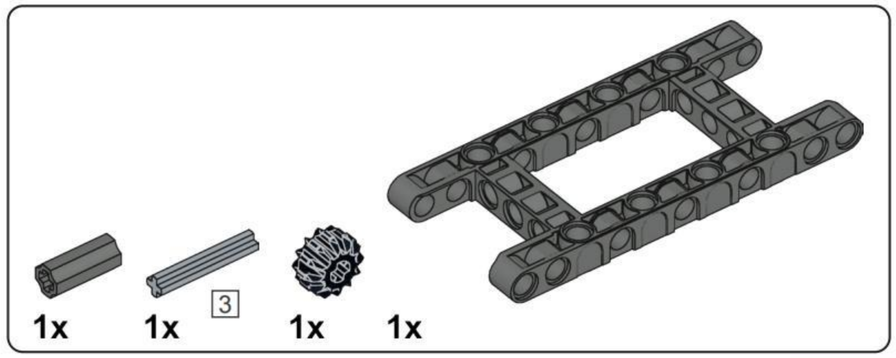


## A45

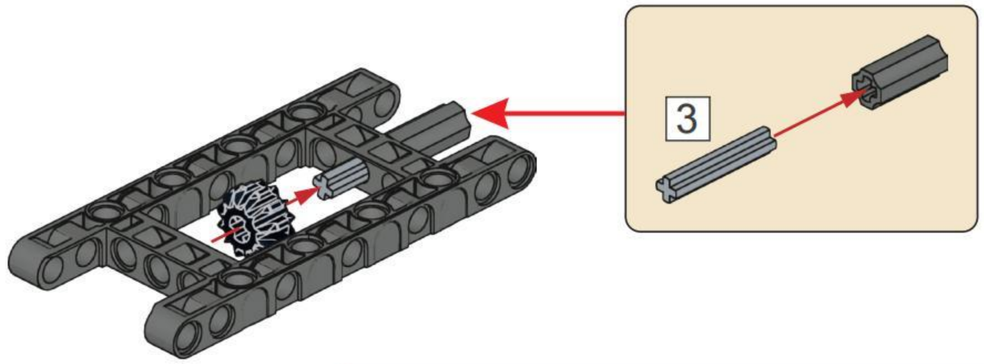


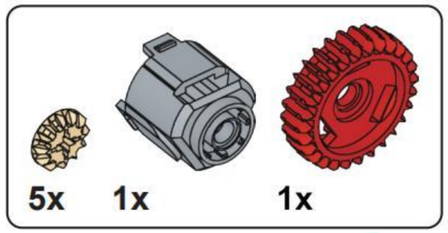


## A46

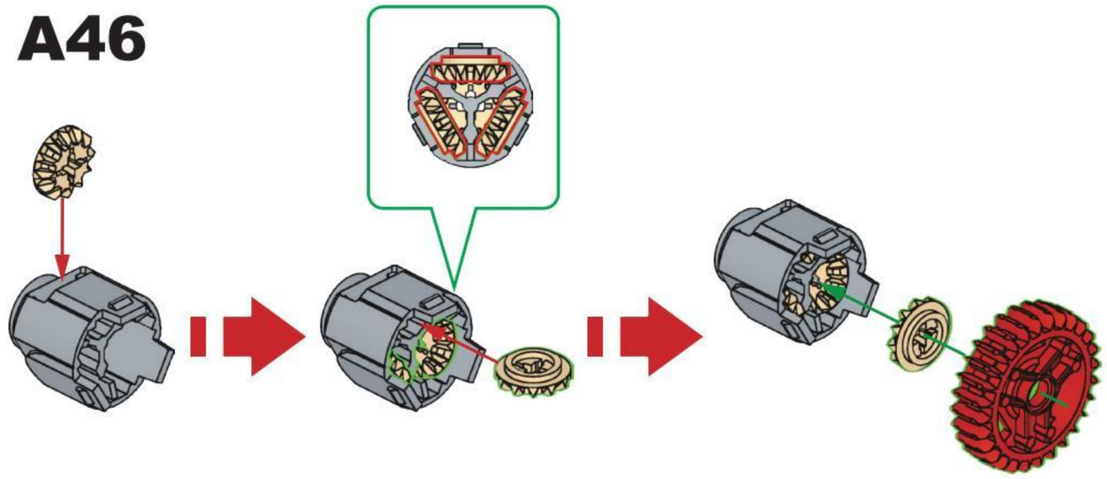

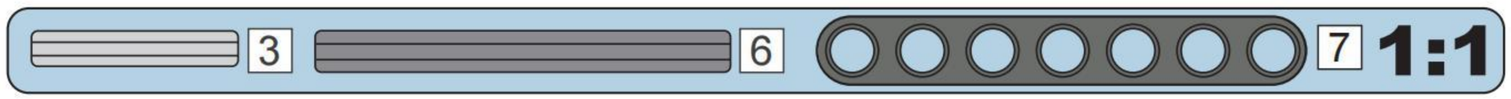

2x 3

# A47

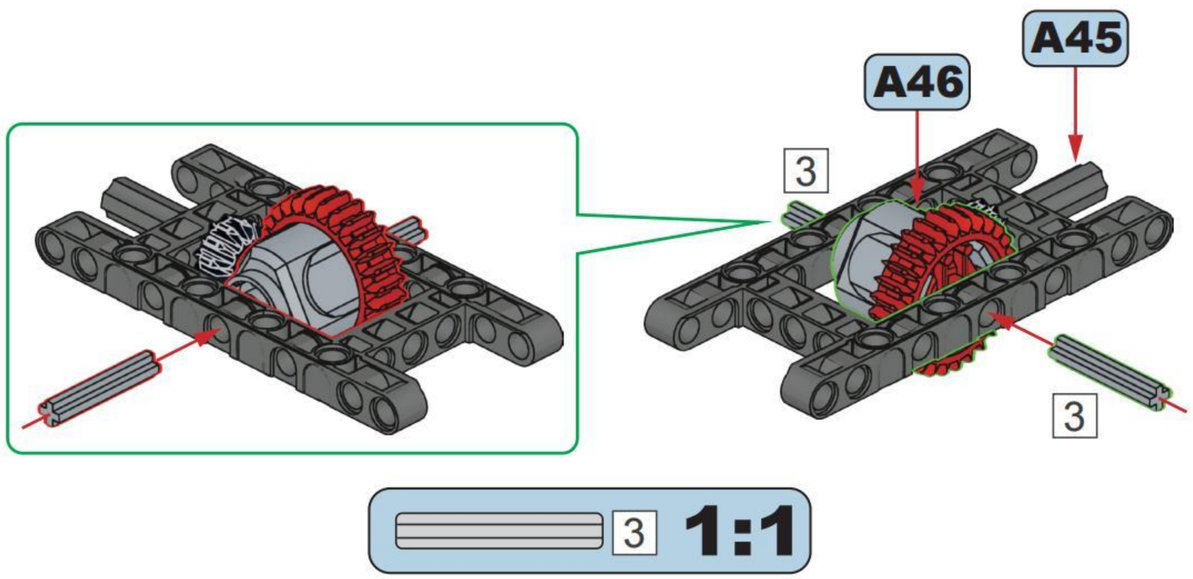


4x

# A48

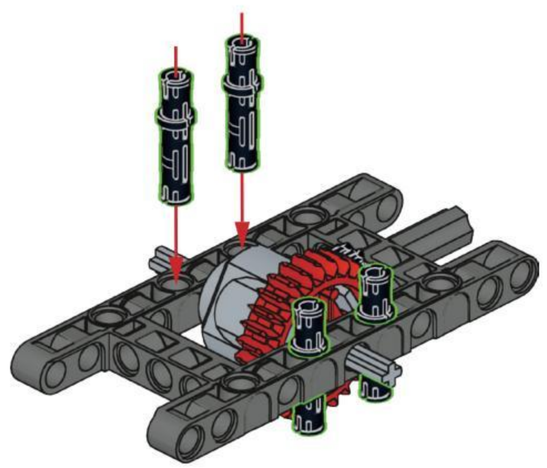

4x 3 4x

# A49

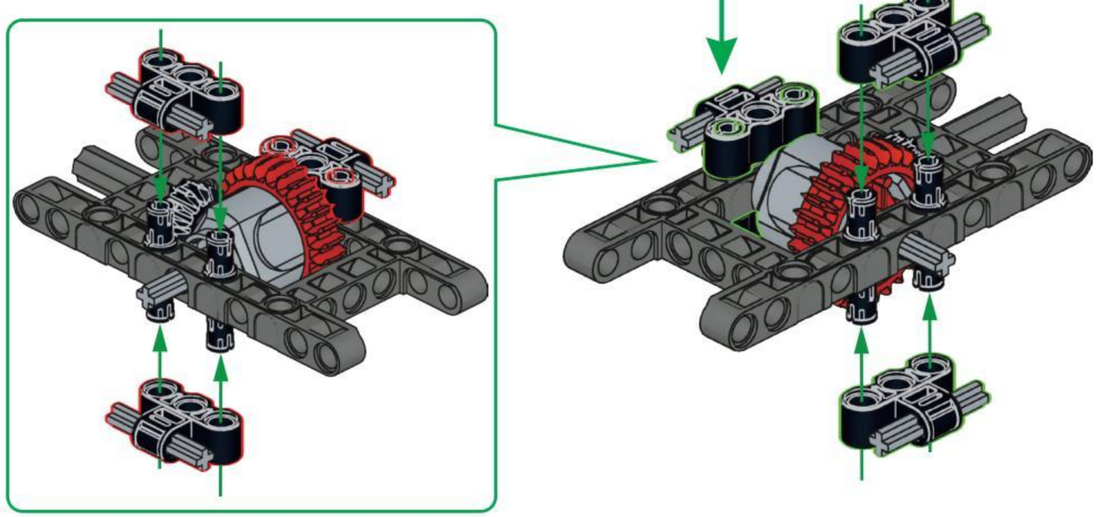


4x

# A50

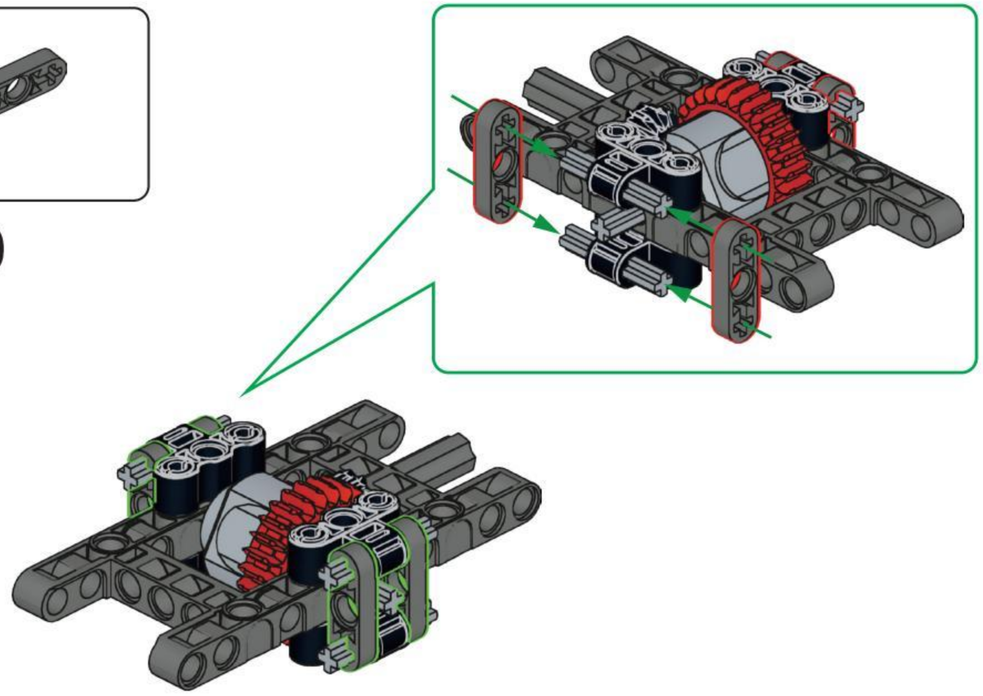

# A51

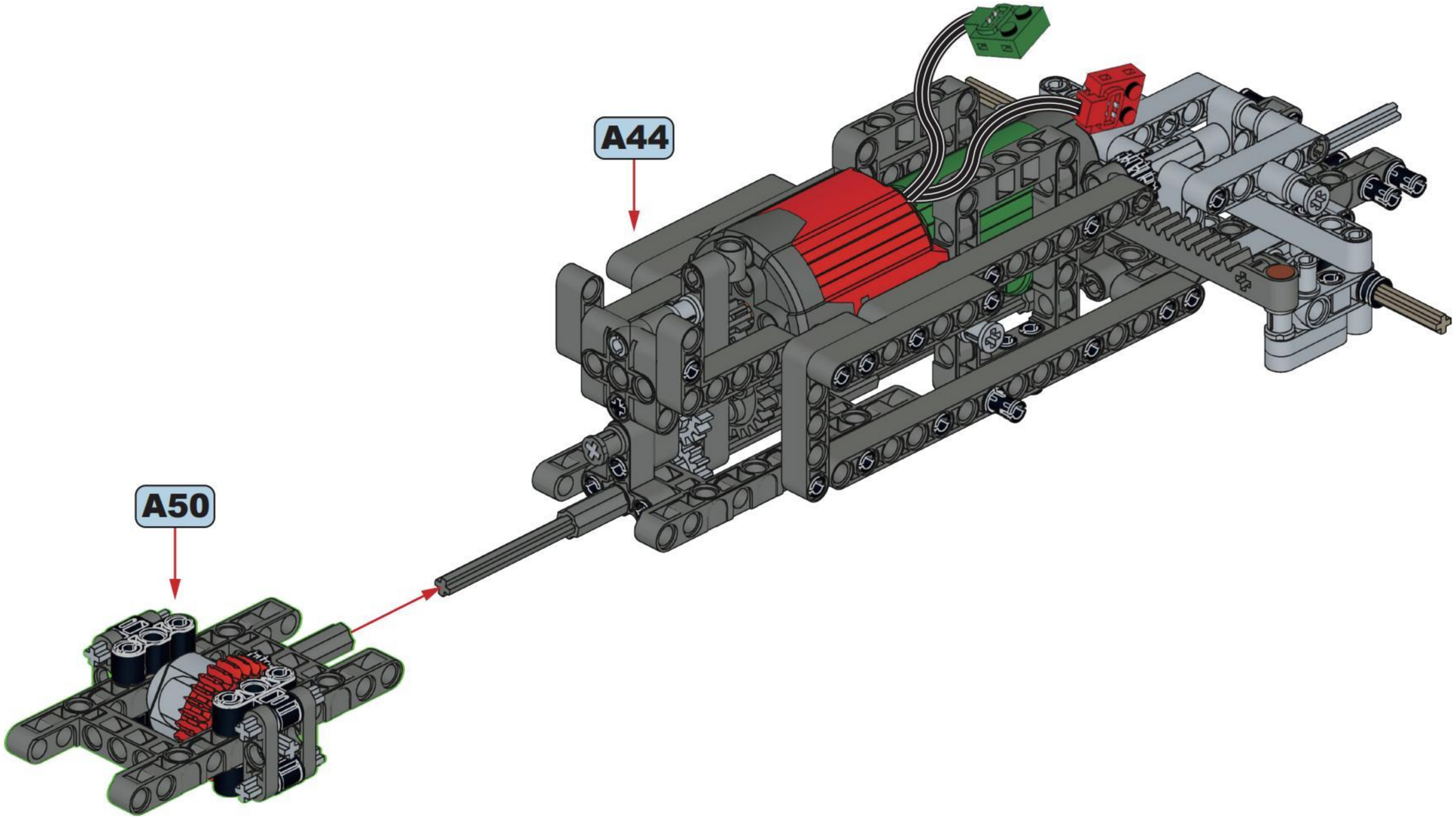


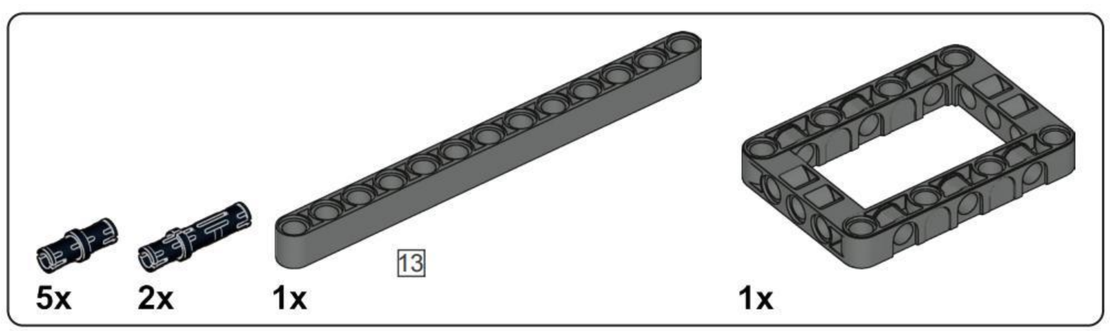


# A52

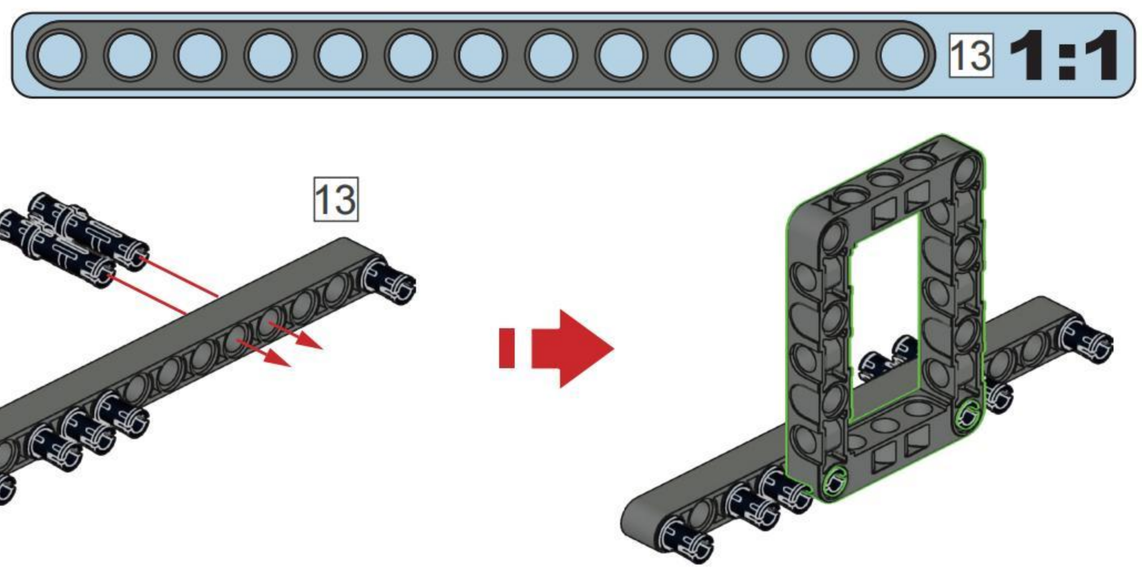

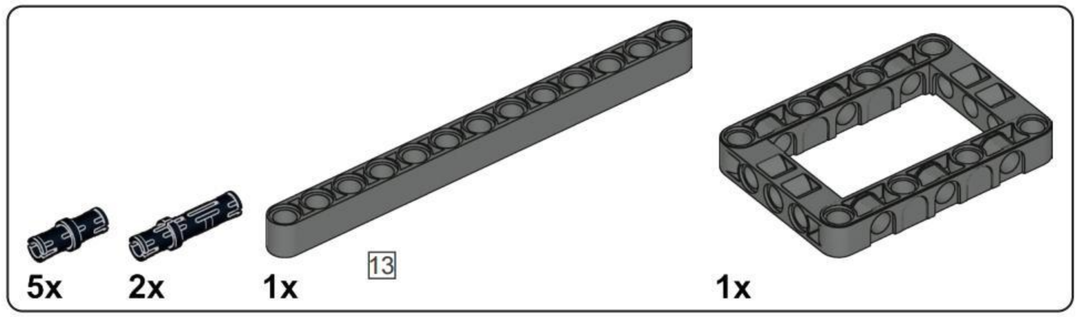


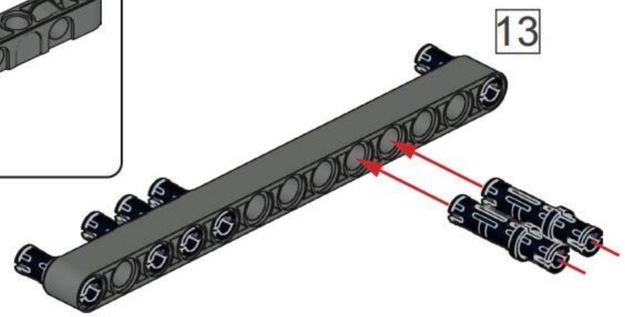


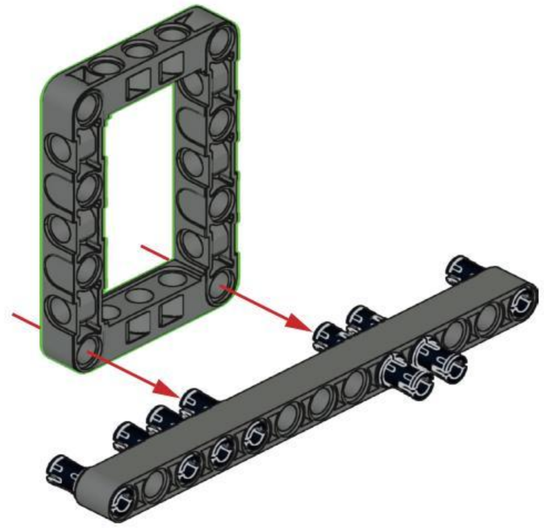

## A53

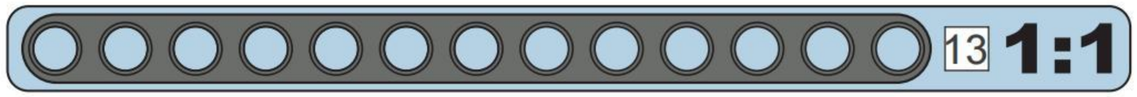


## A54



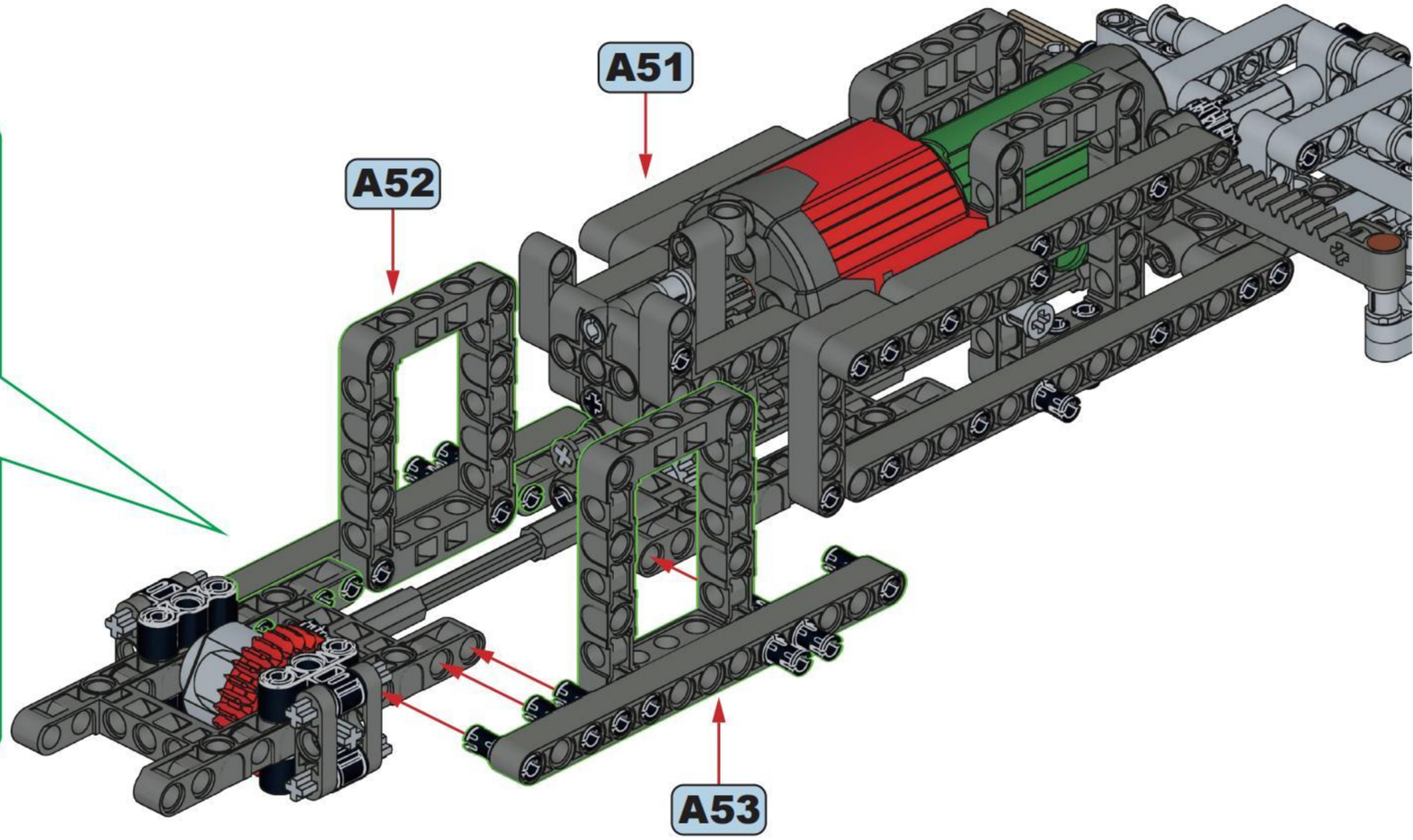

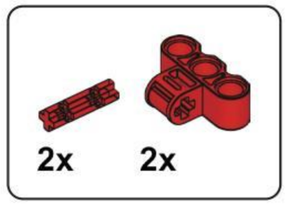


## A55

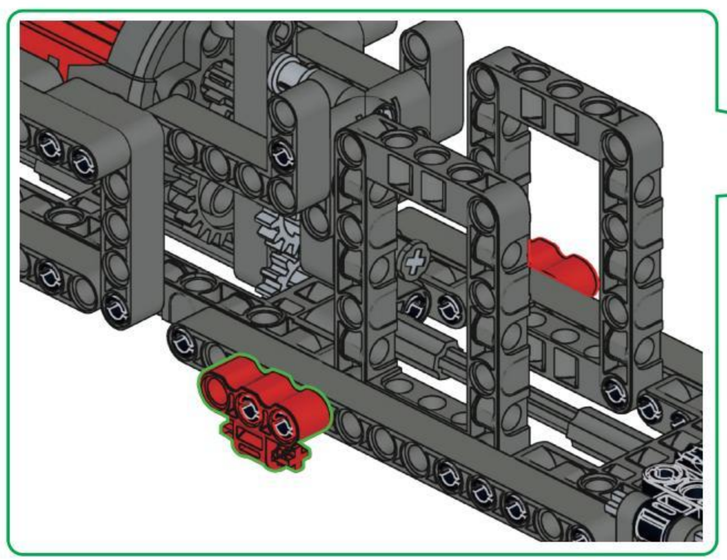

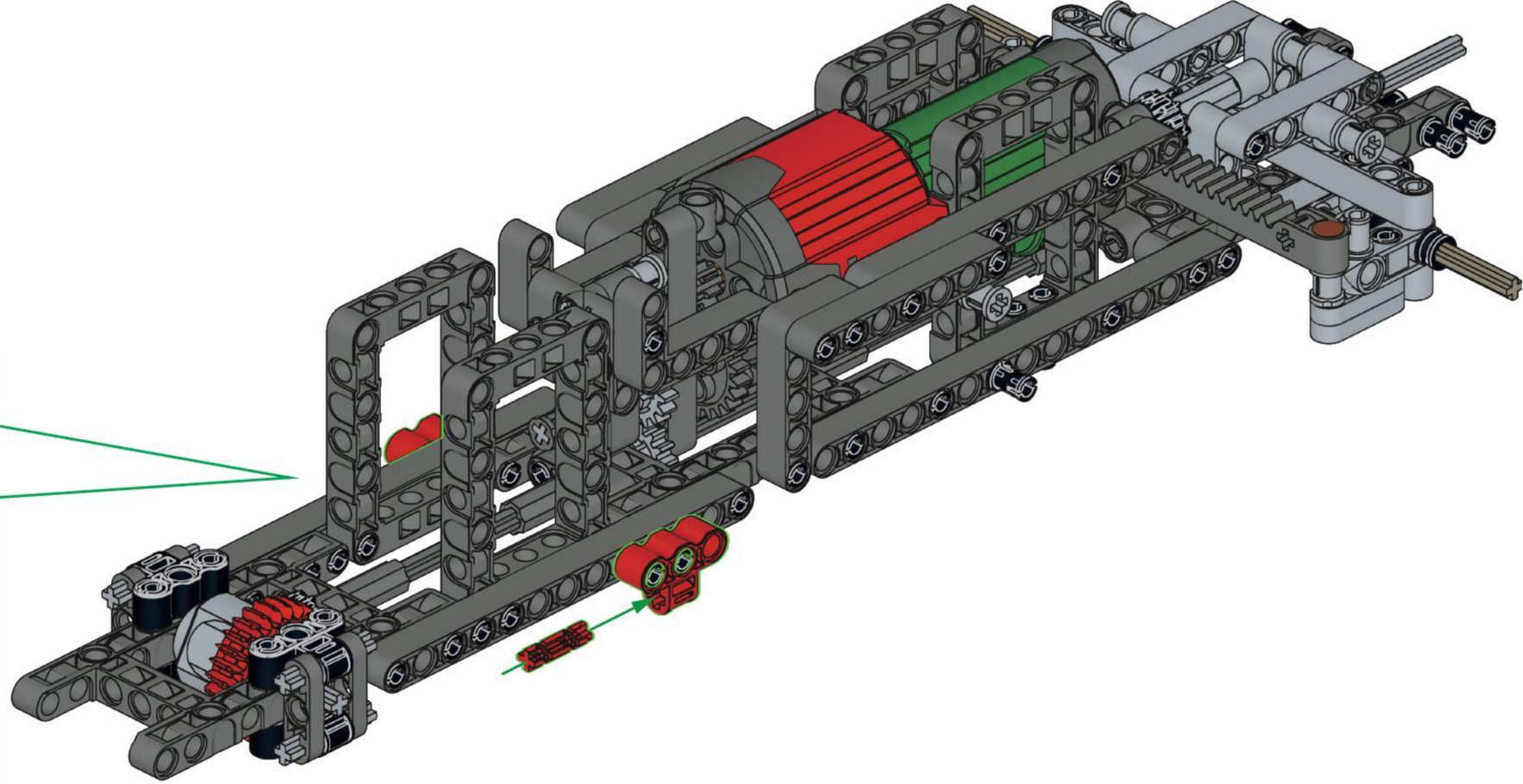

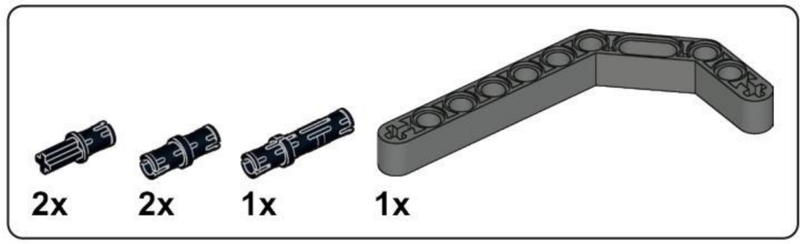


## A56

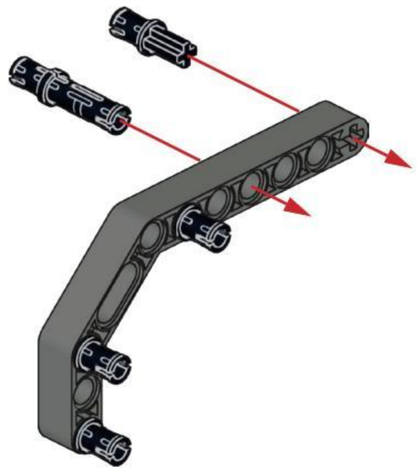

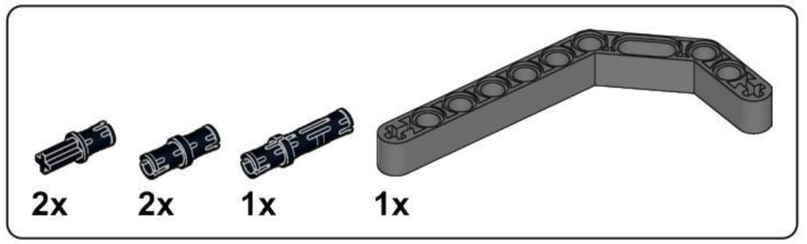


## A57

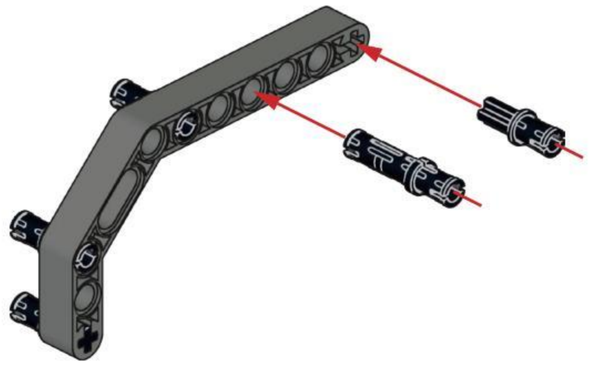

## A58

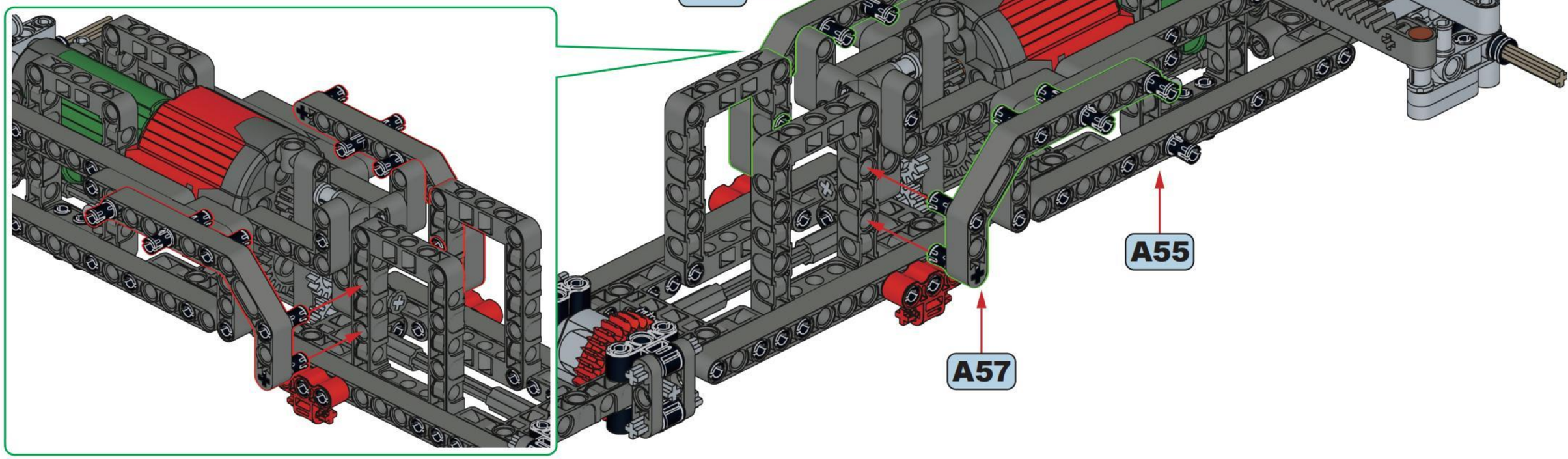

2x

## A59

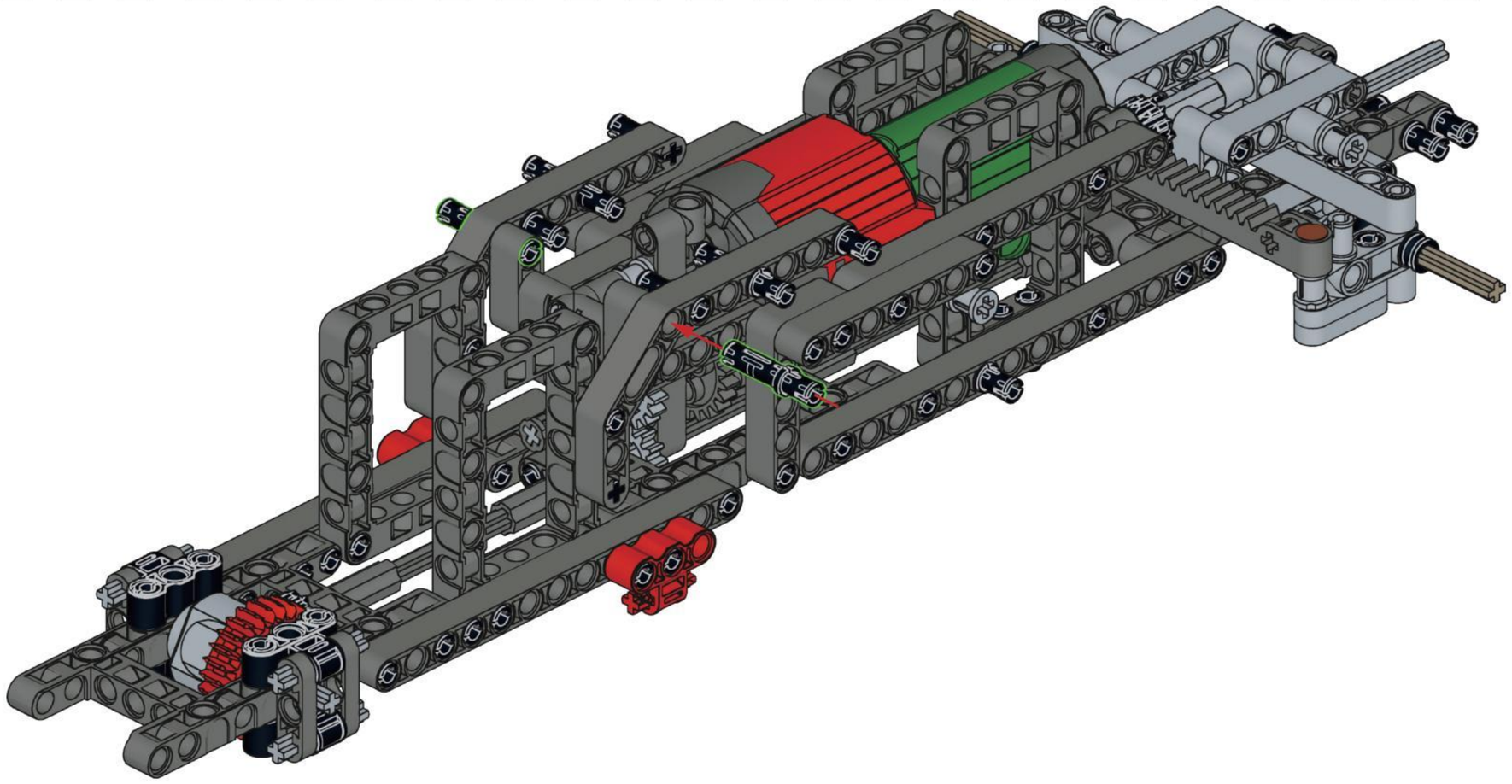

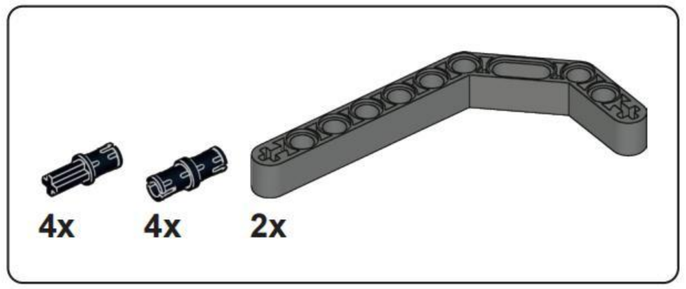


# A60

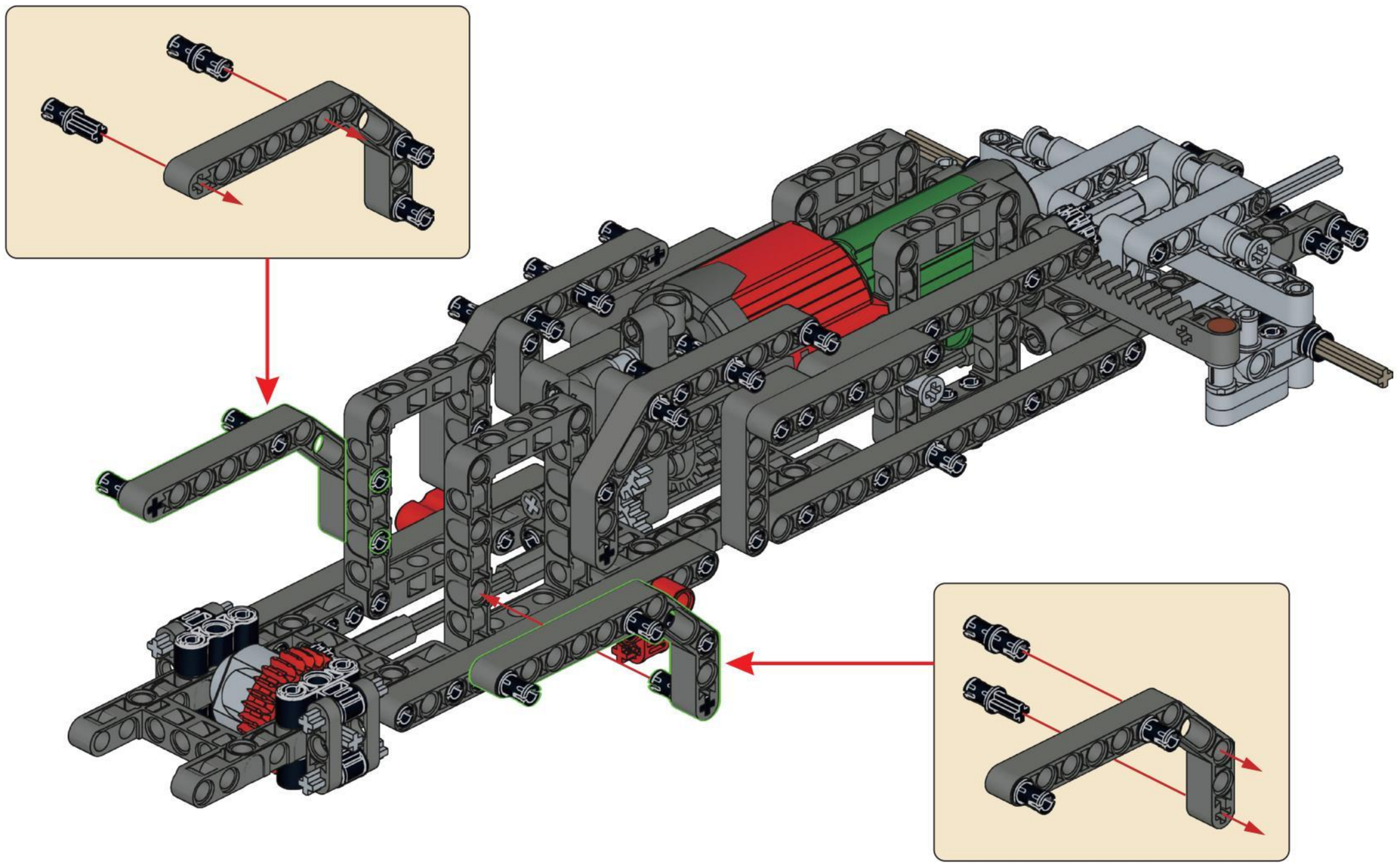

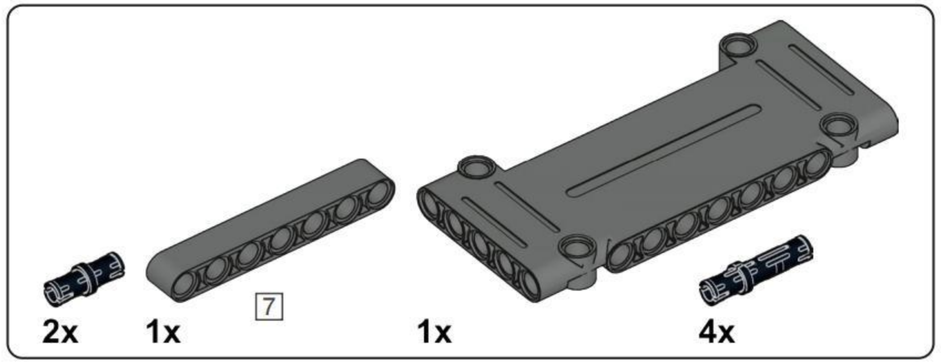


# A61

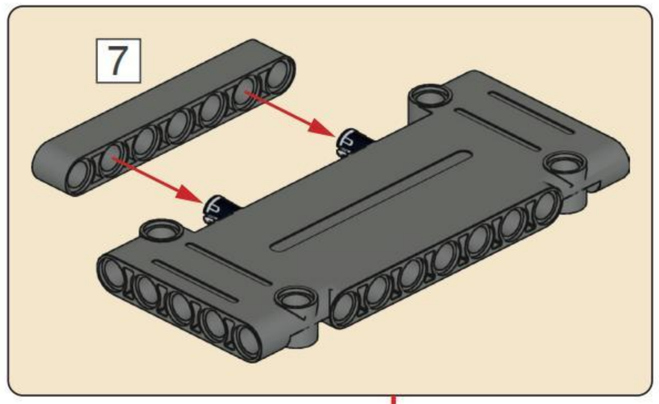


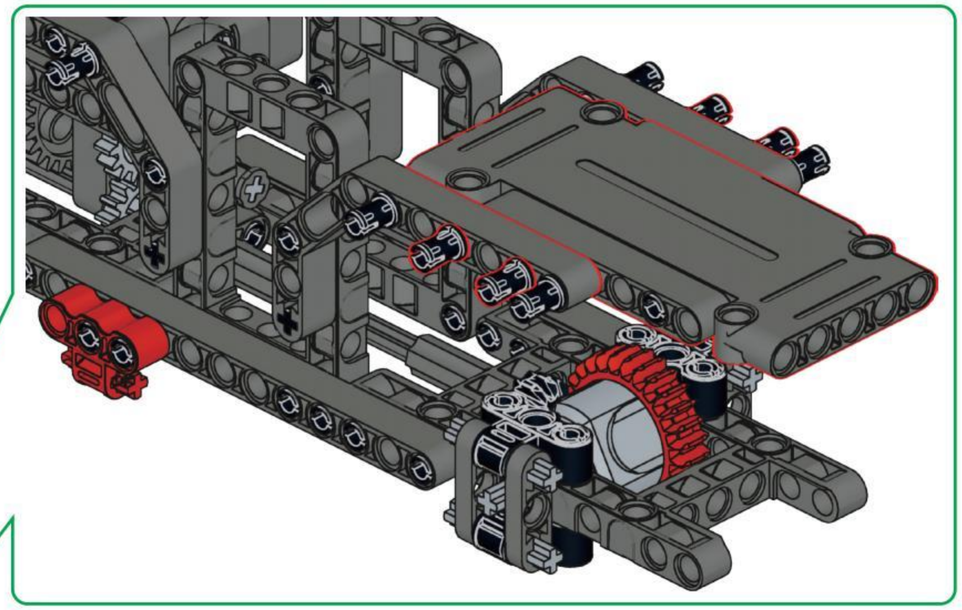

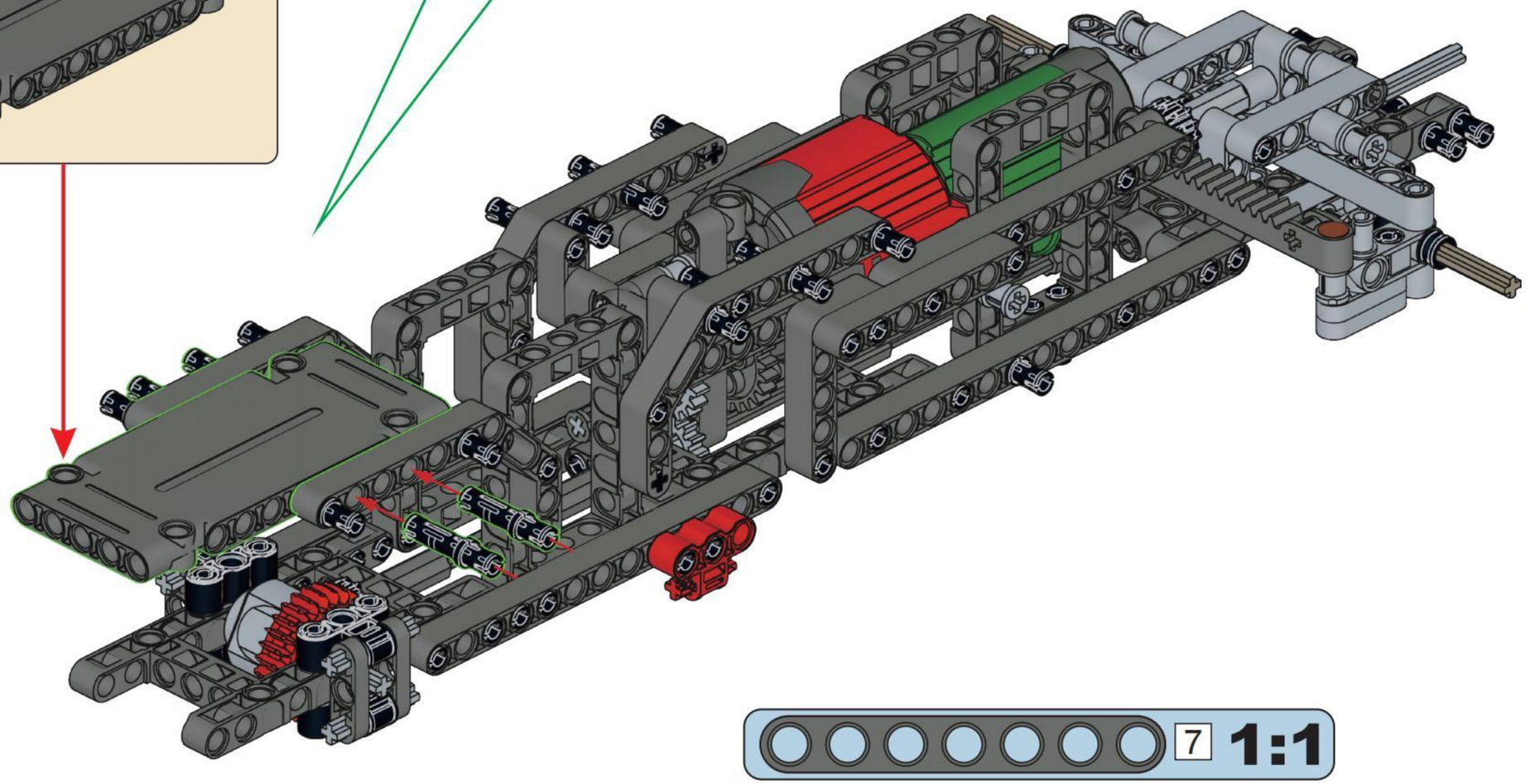

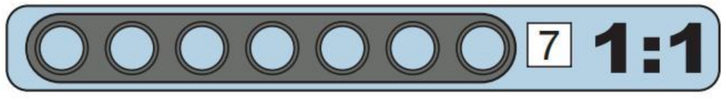

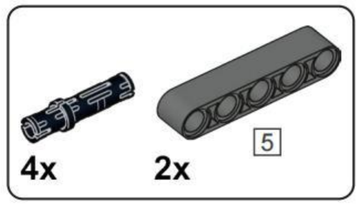


## A62

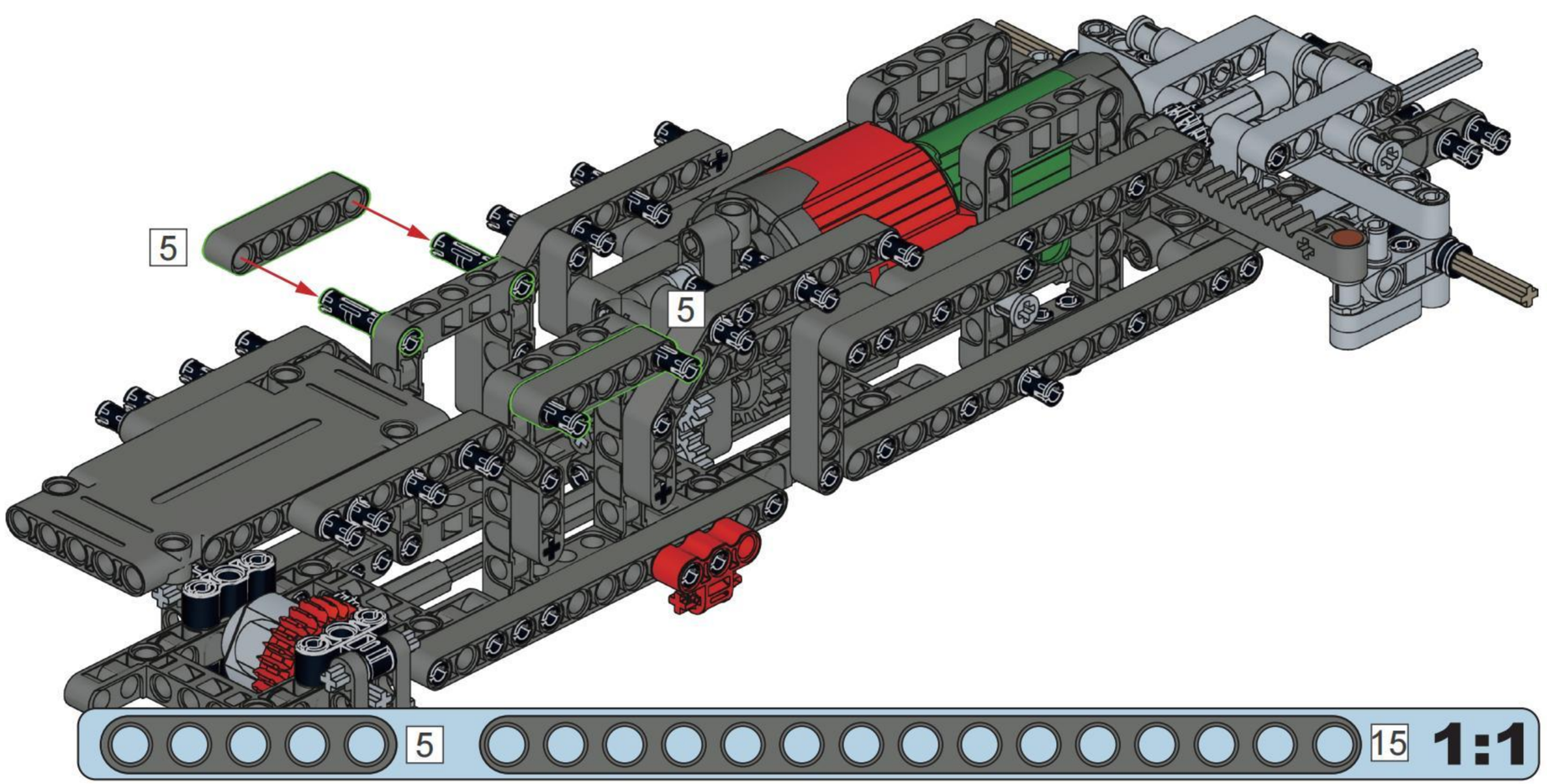


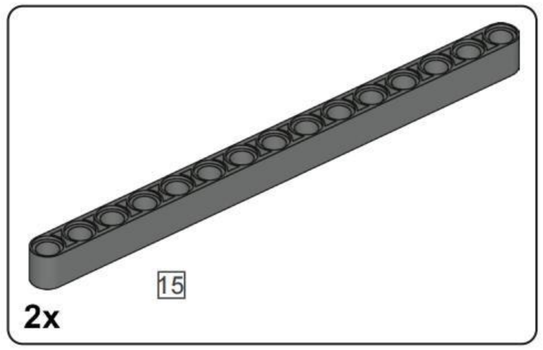


## A63

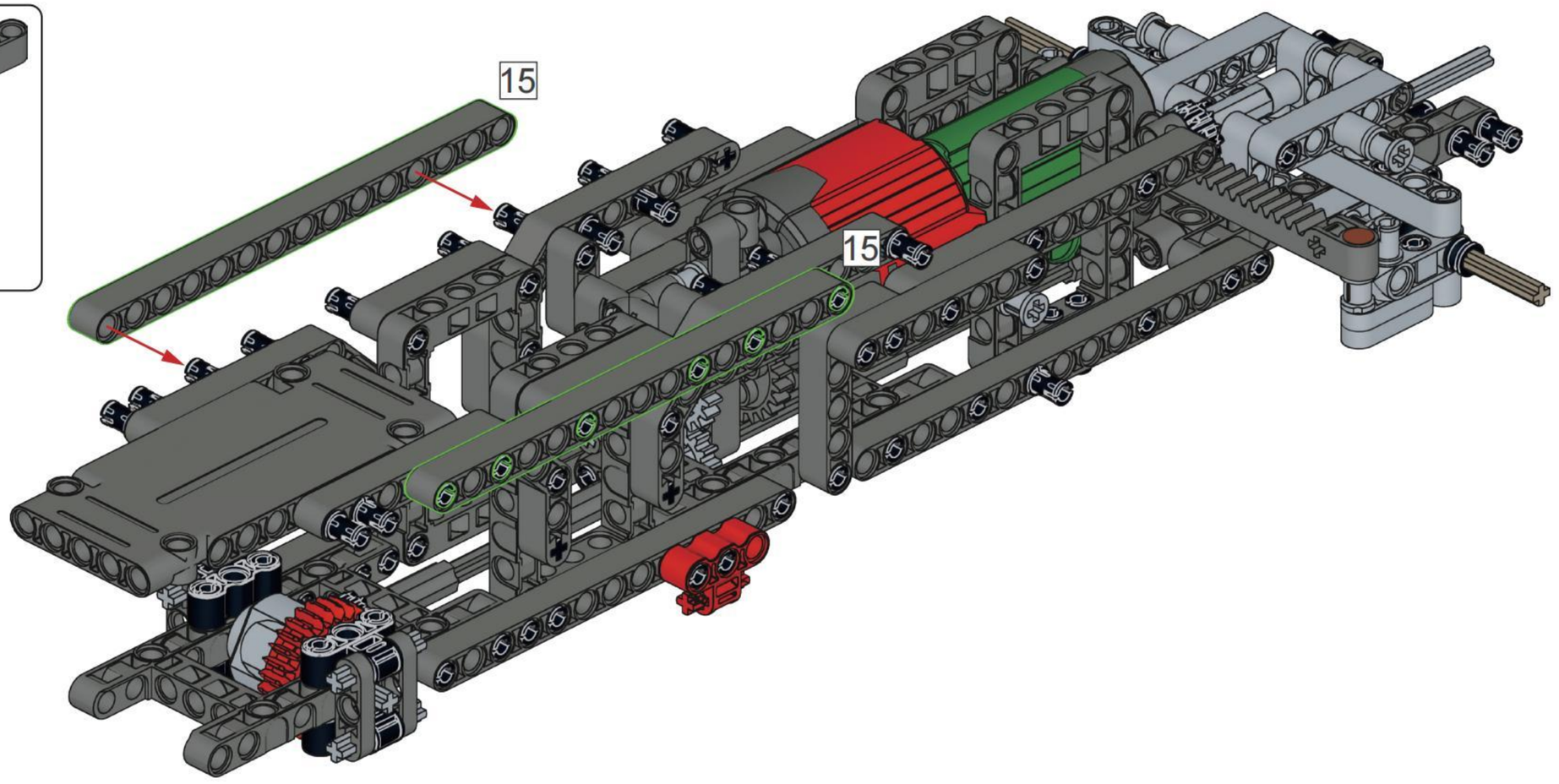

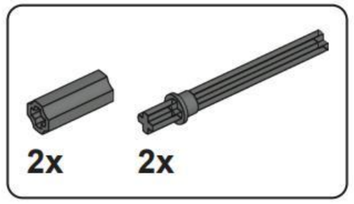


# A64

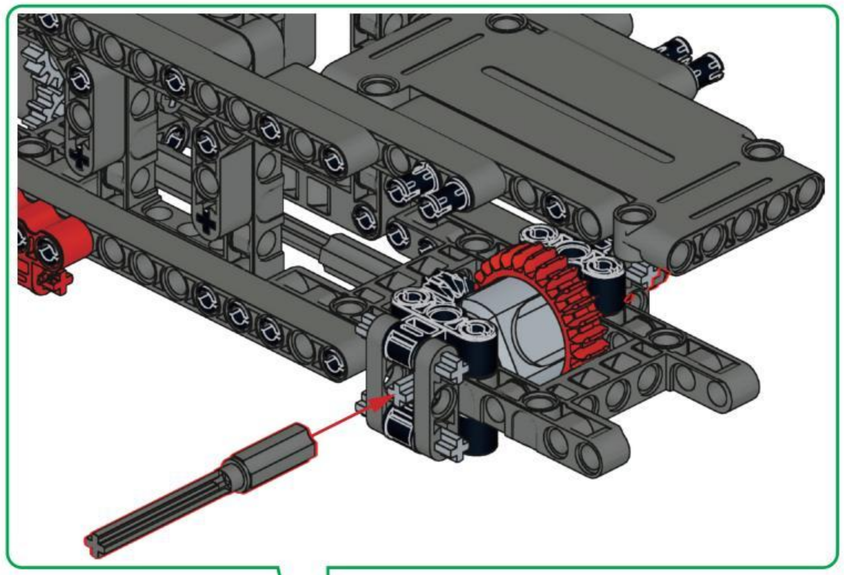

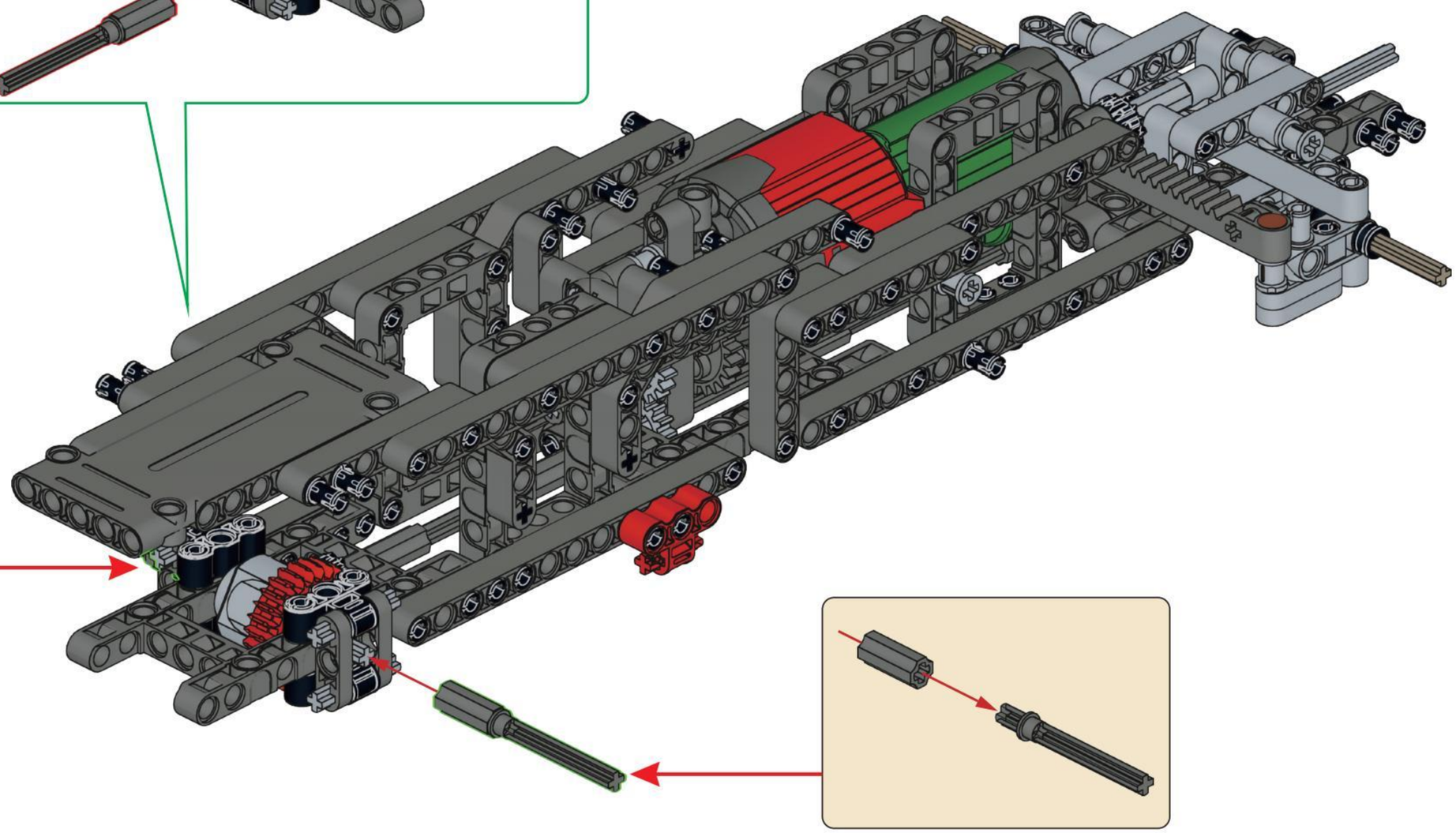

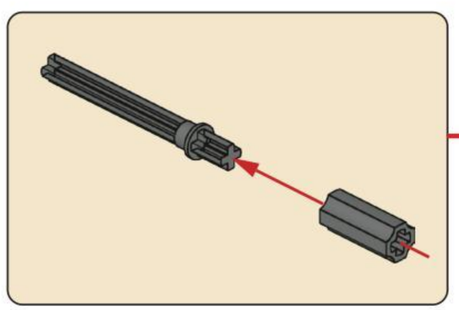

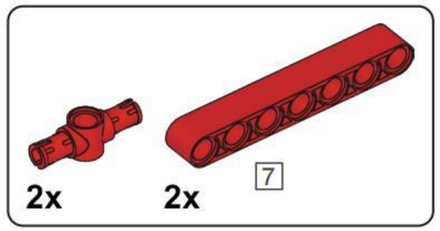


# A65

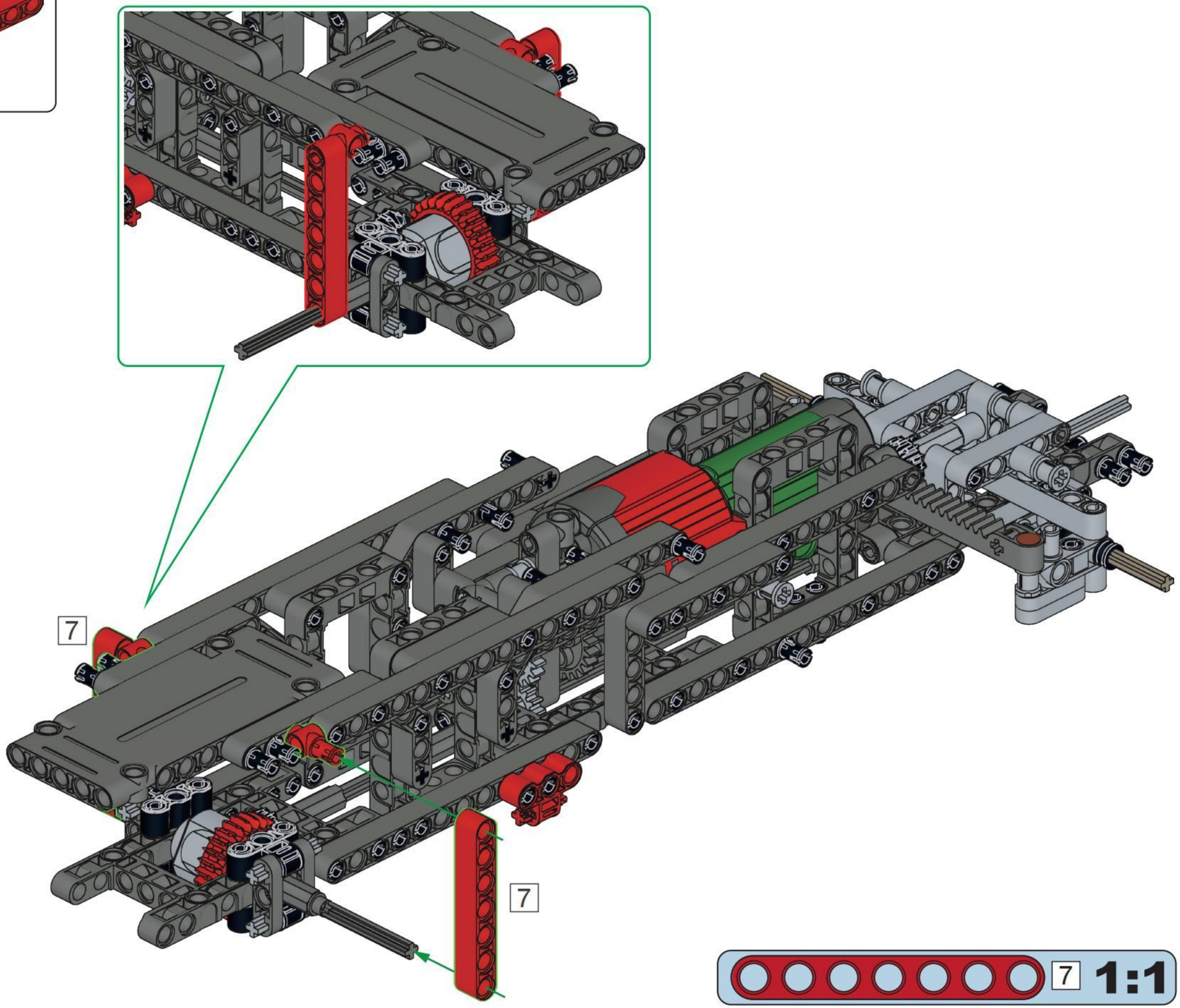

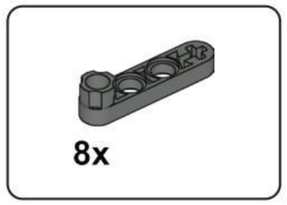


**A66**

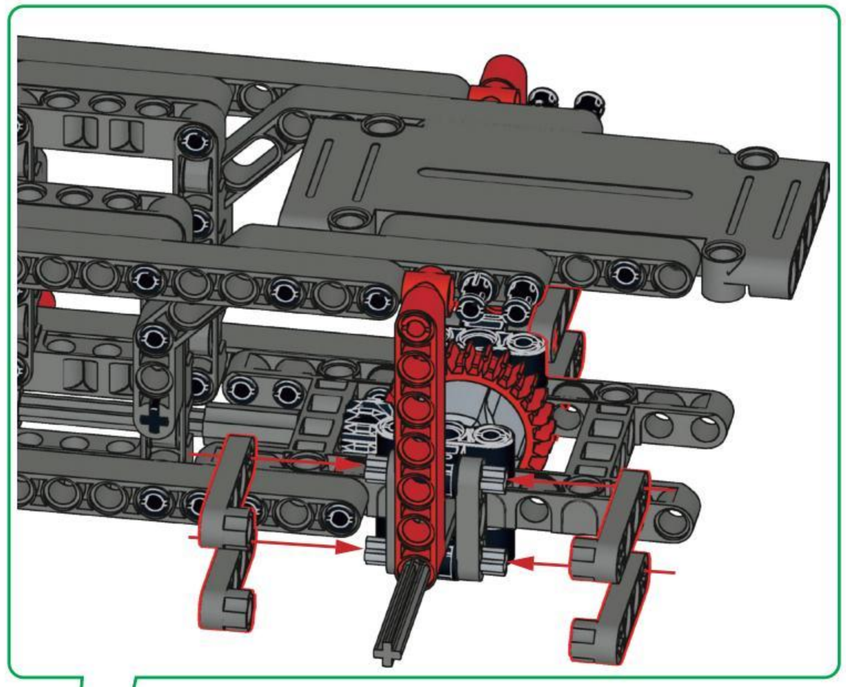

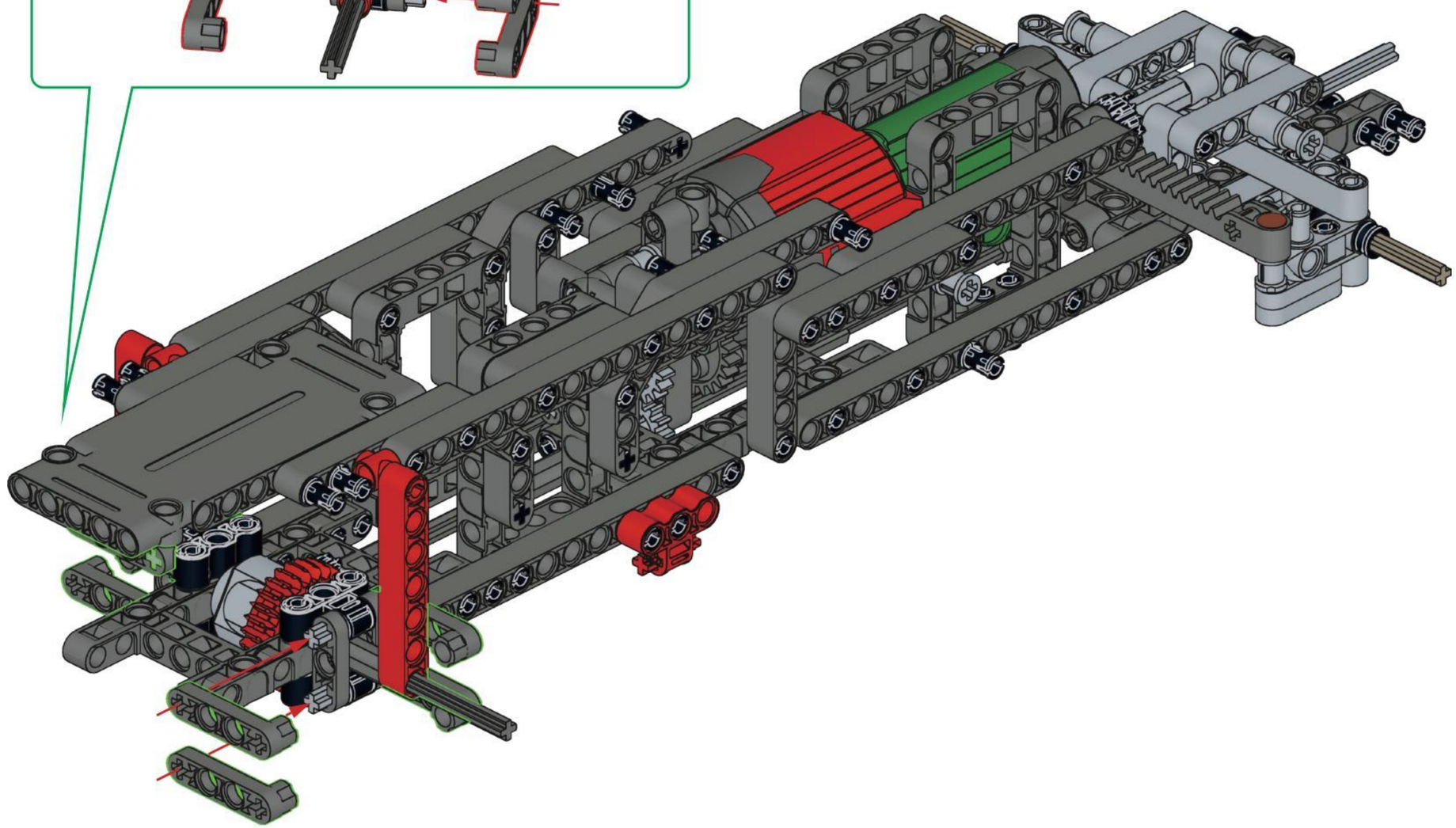

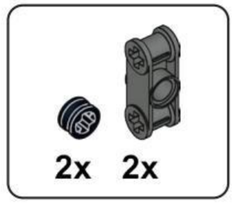


# A67

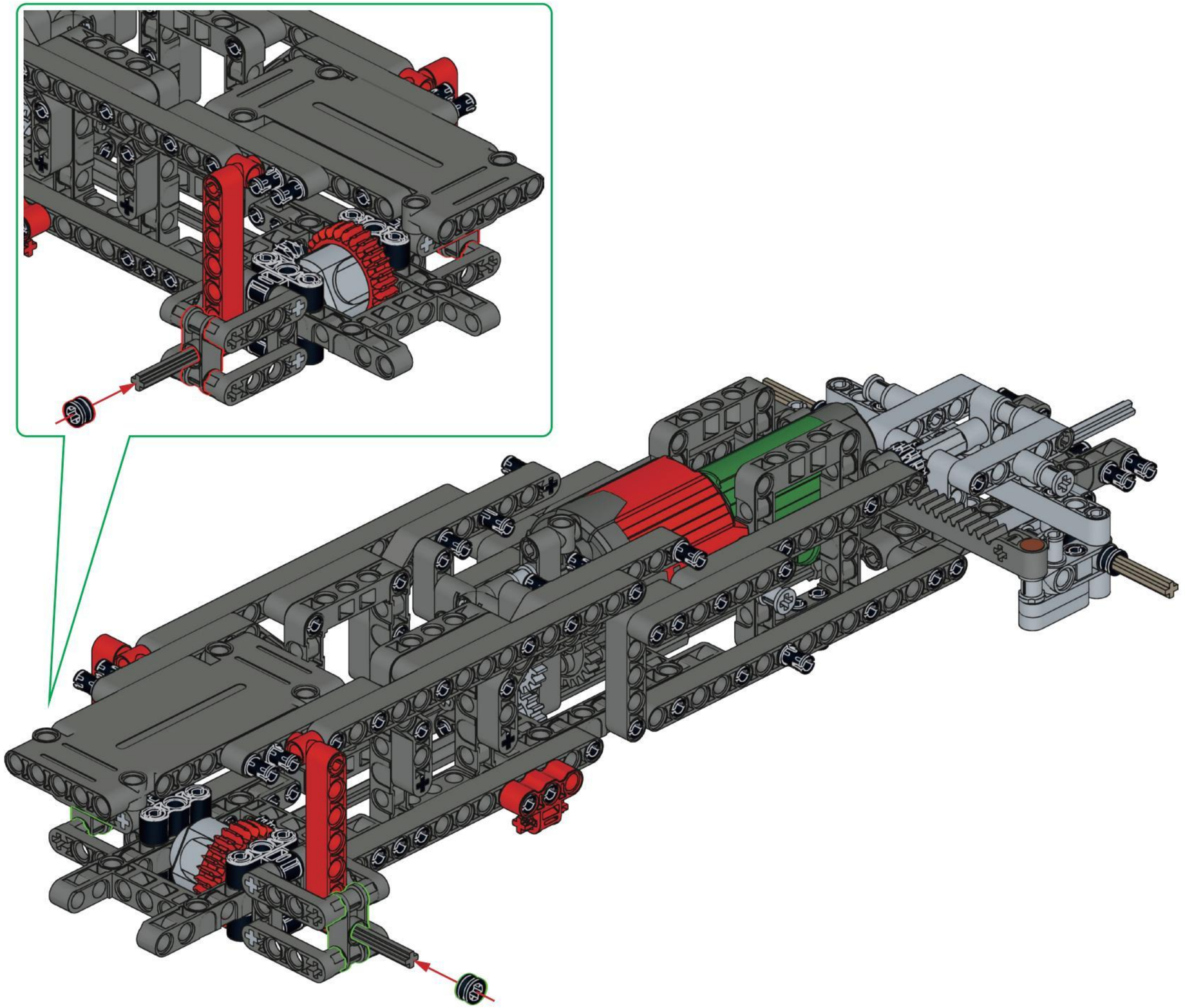

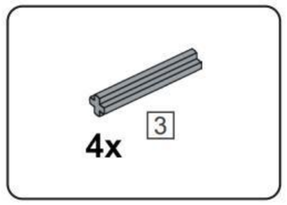


# A68




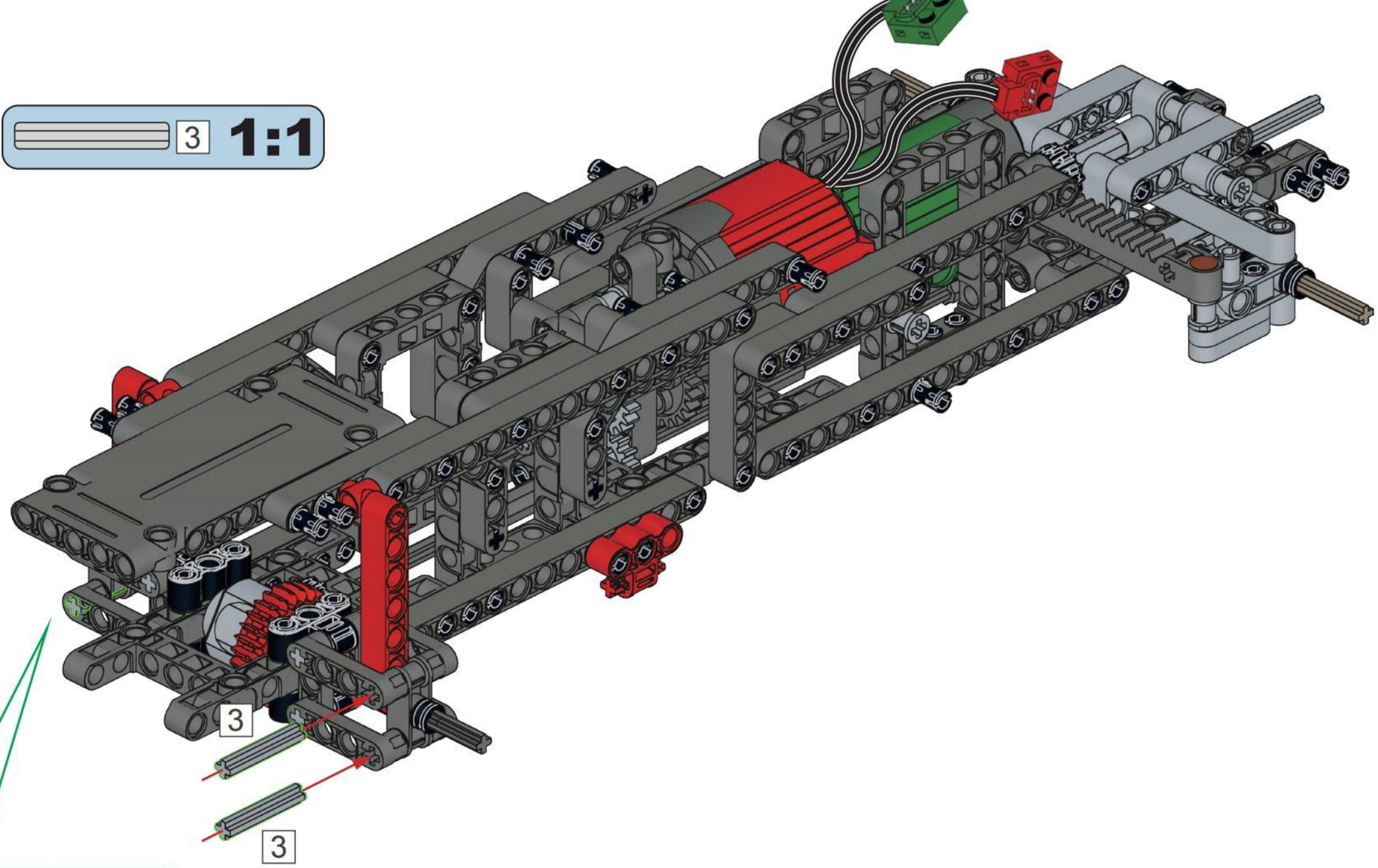


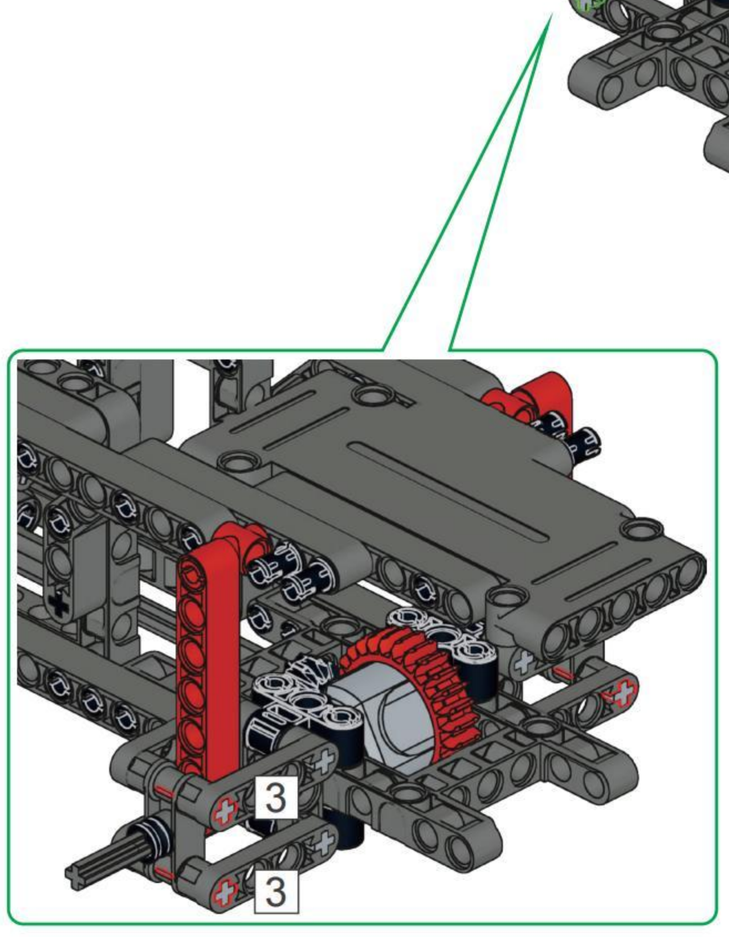

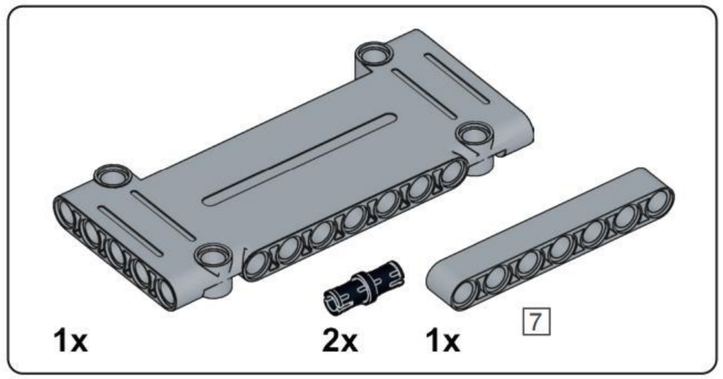


## A69

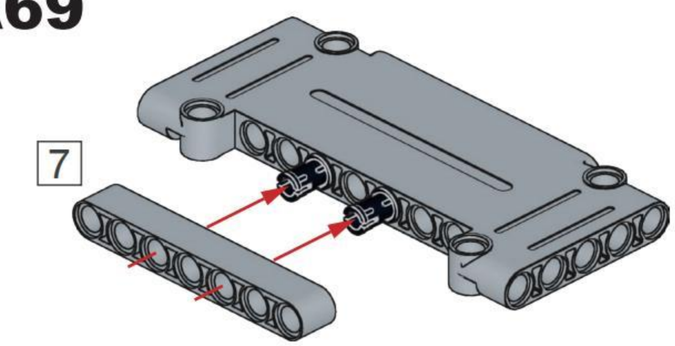


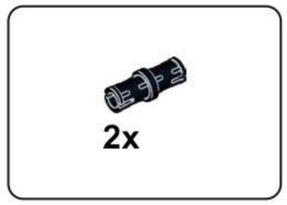


## A70

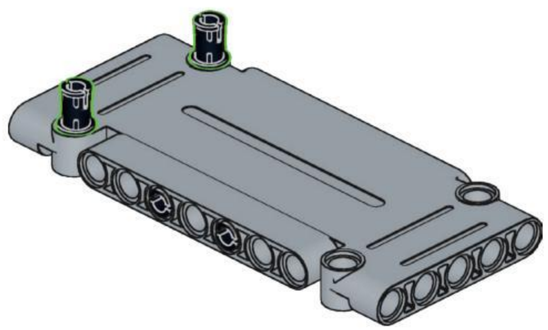

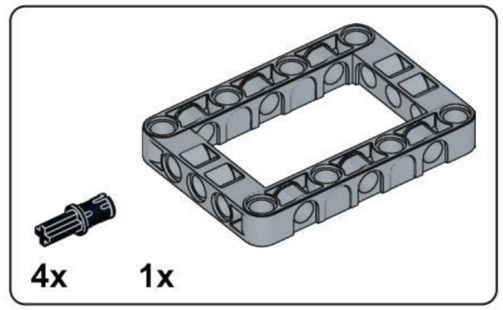


## A71

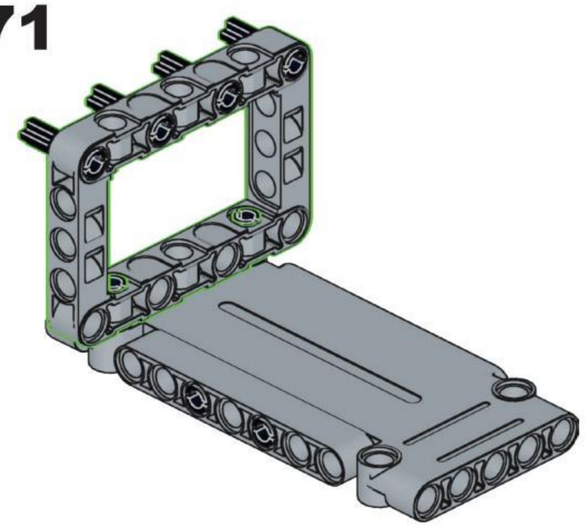

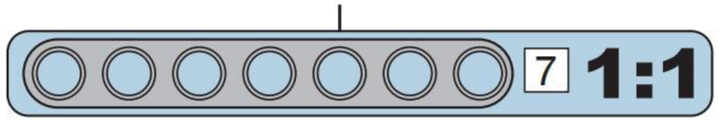


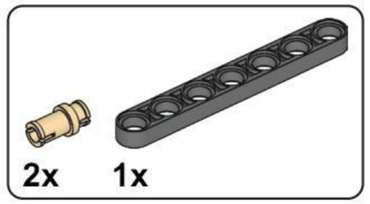


## A72

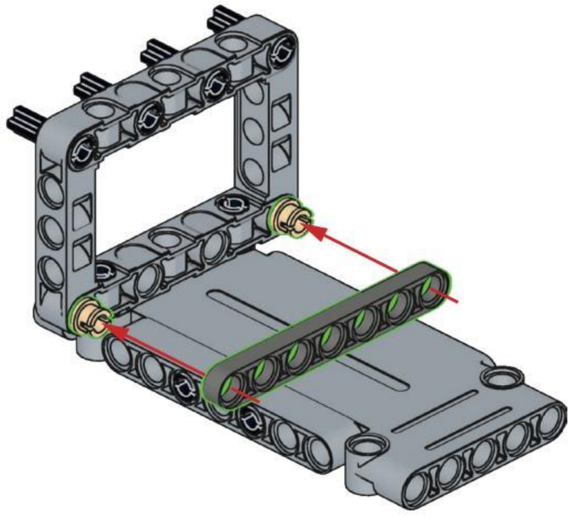

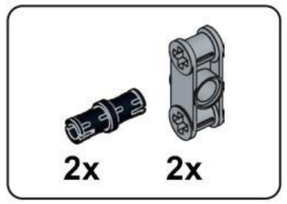


## A73

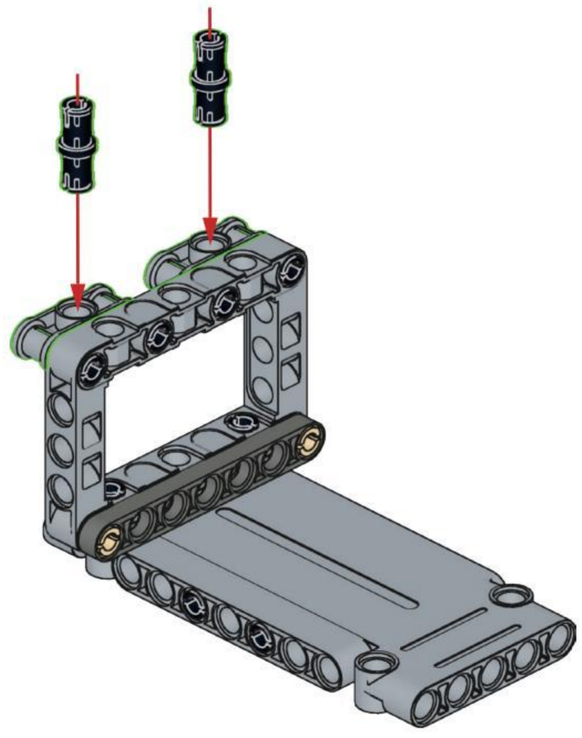

# A74

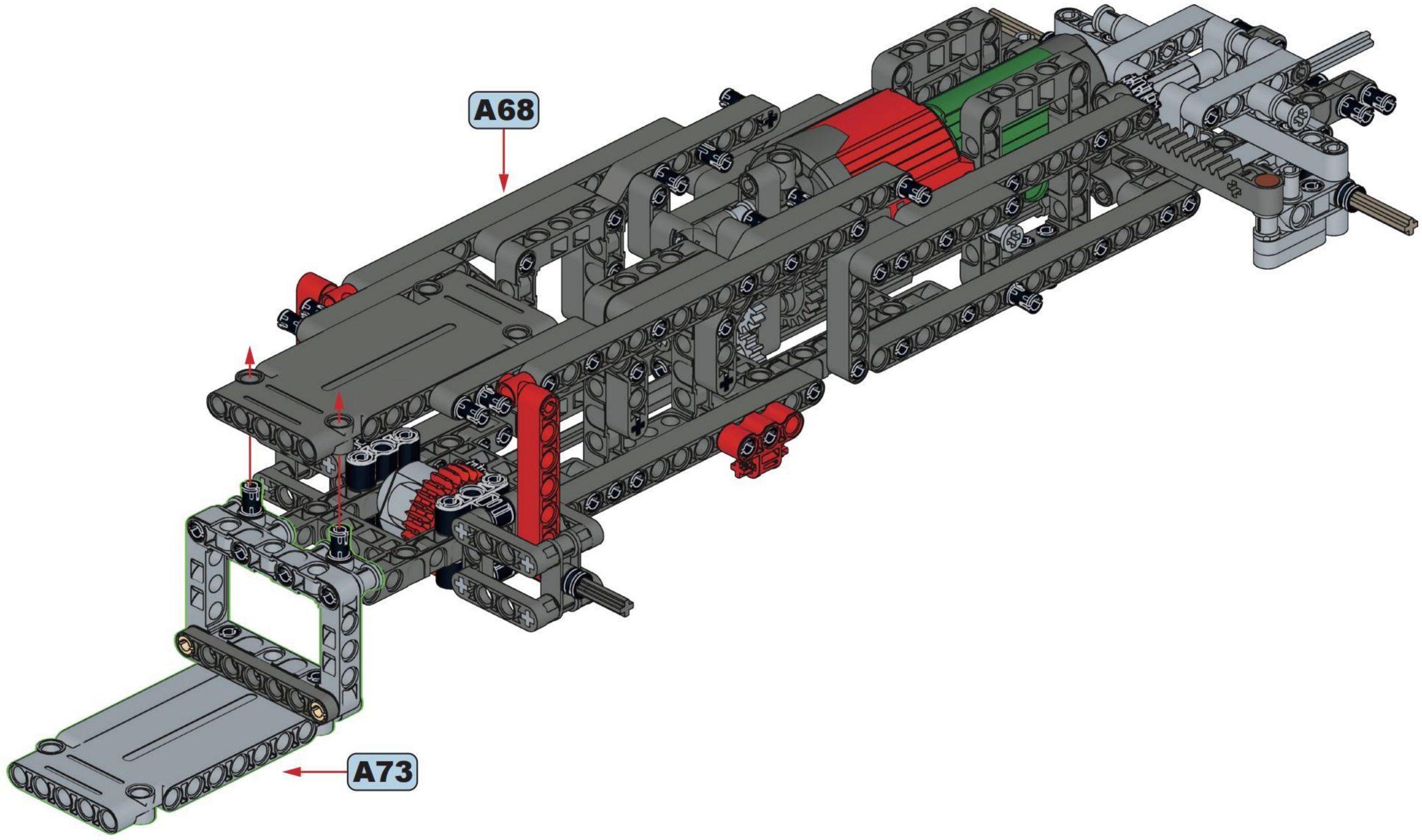

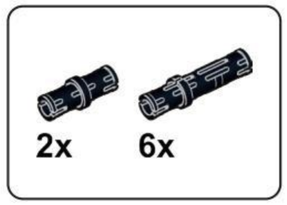


# A75

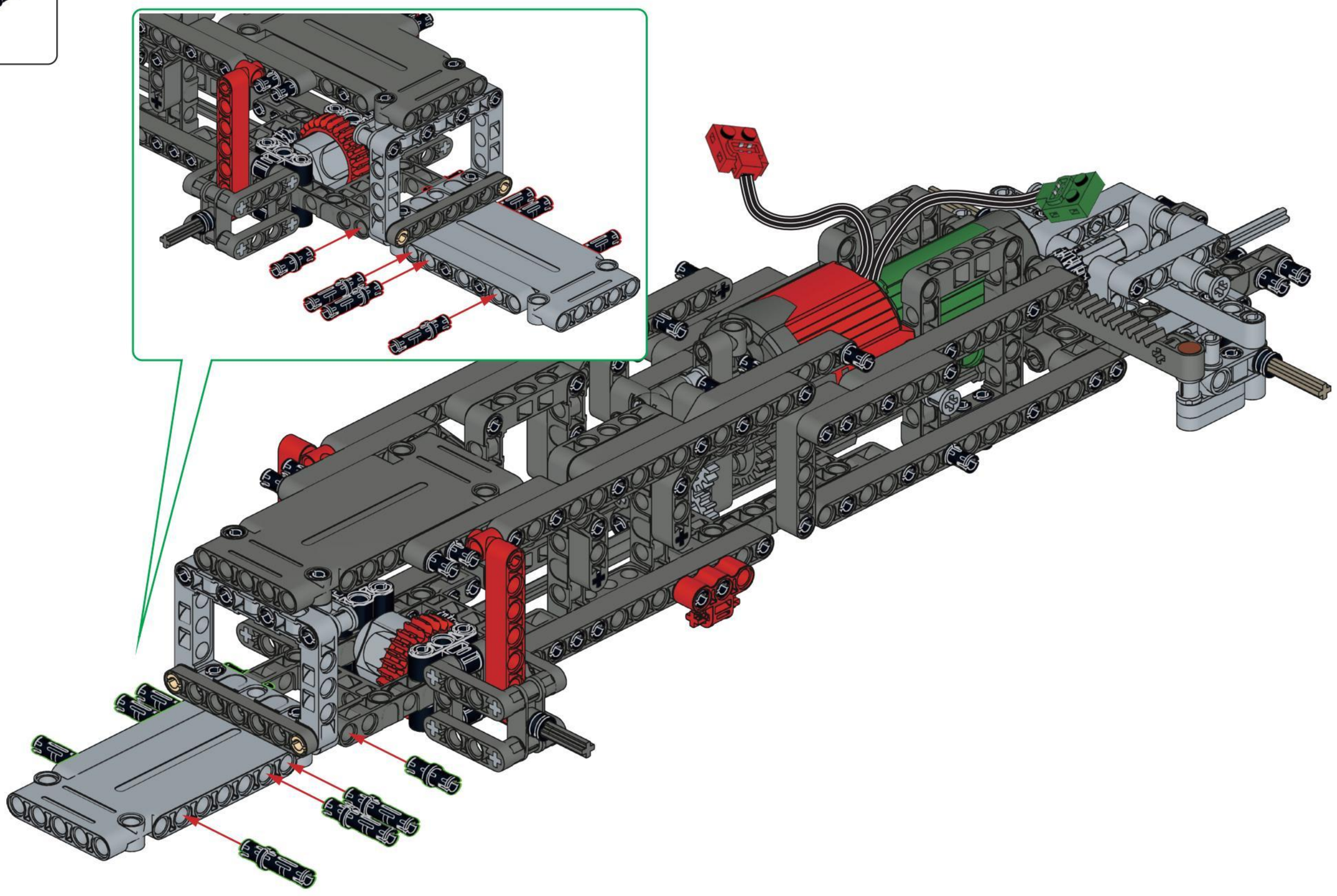

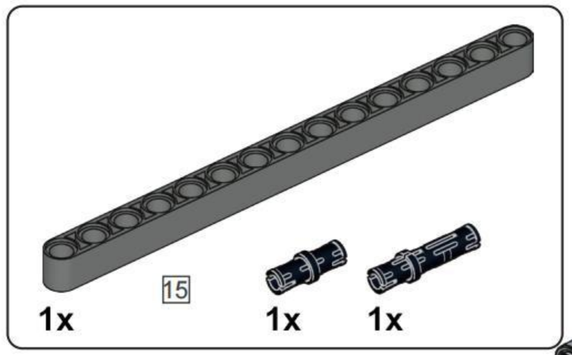


## A76

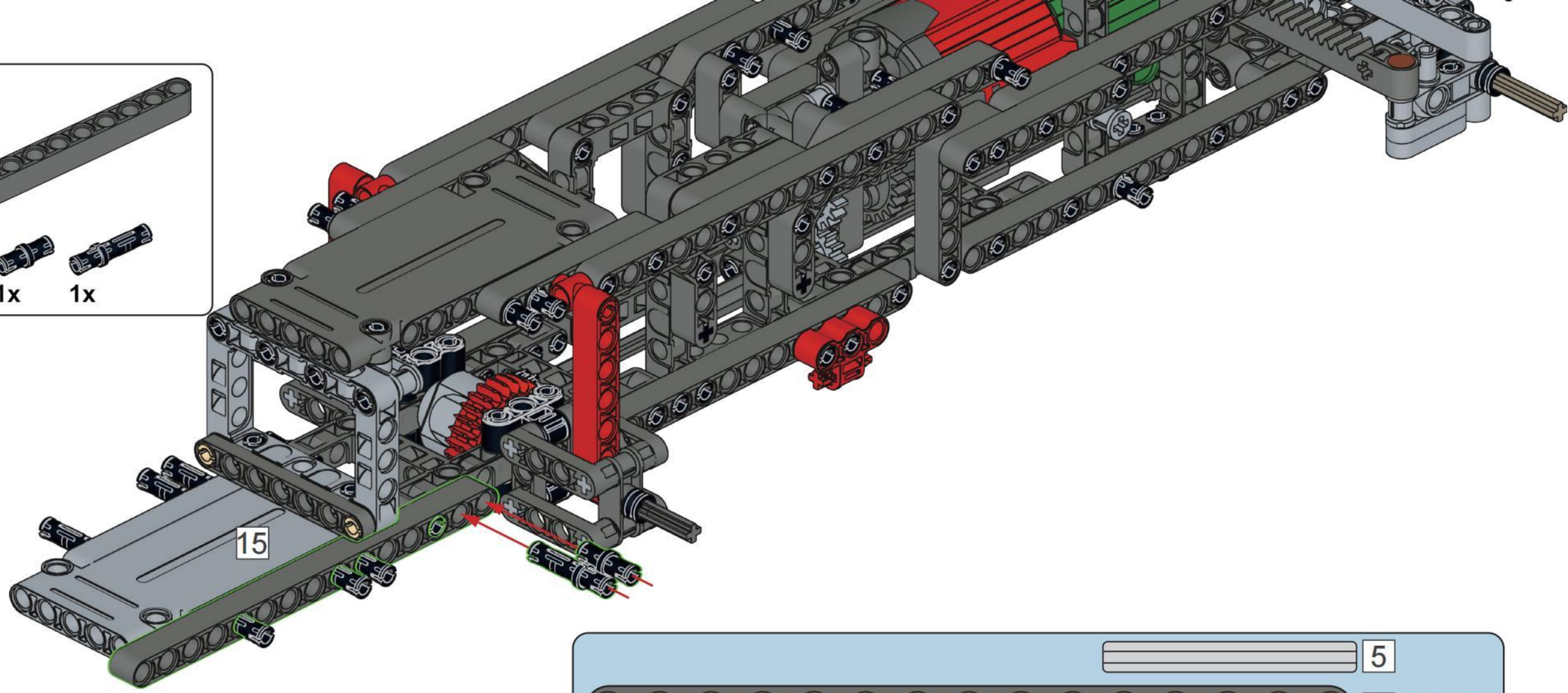


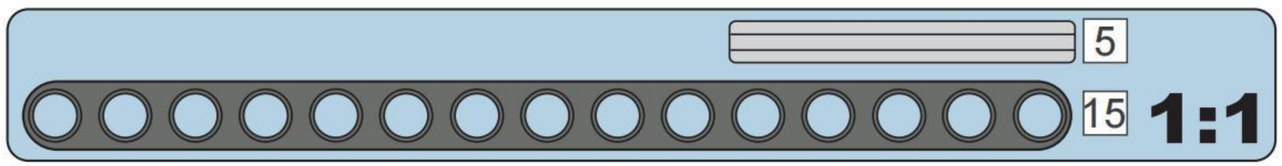


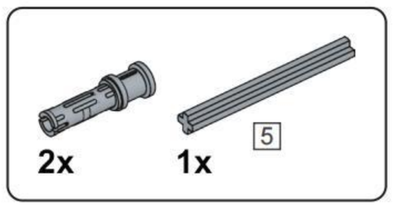


## A77

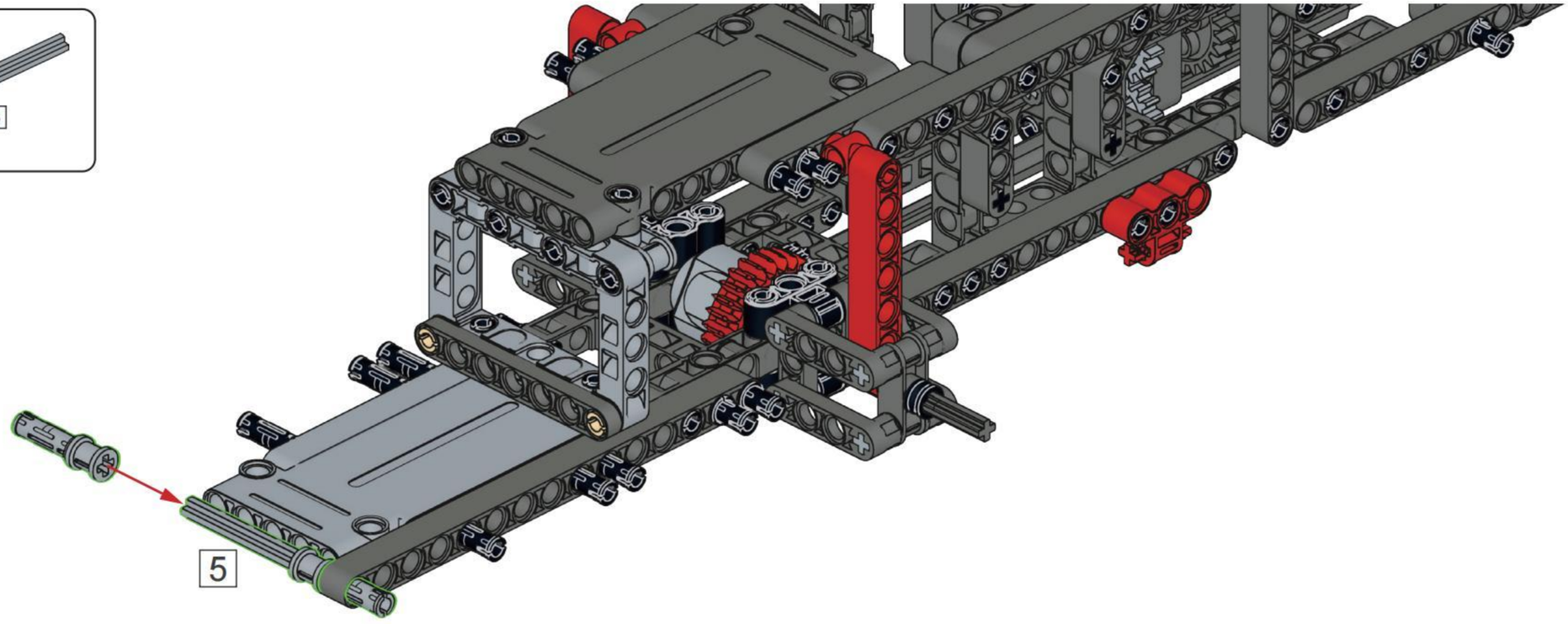

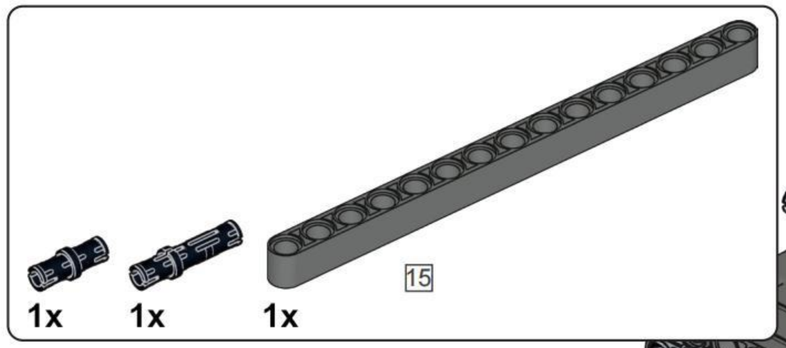


# A78

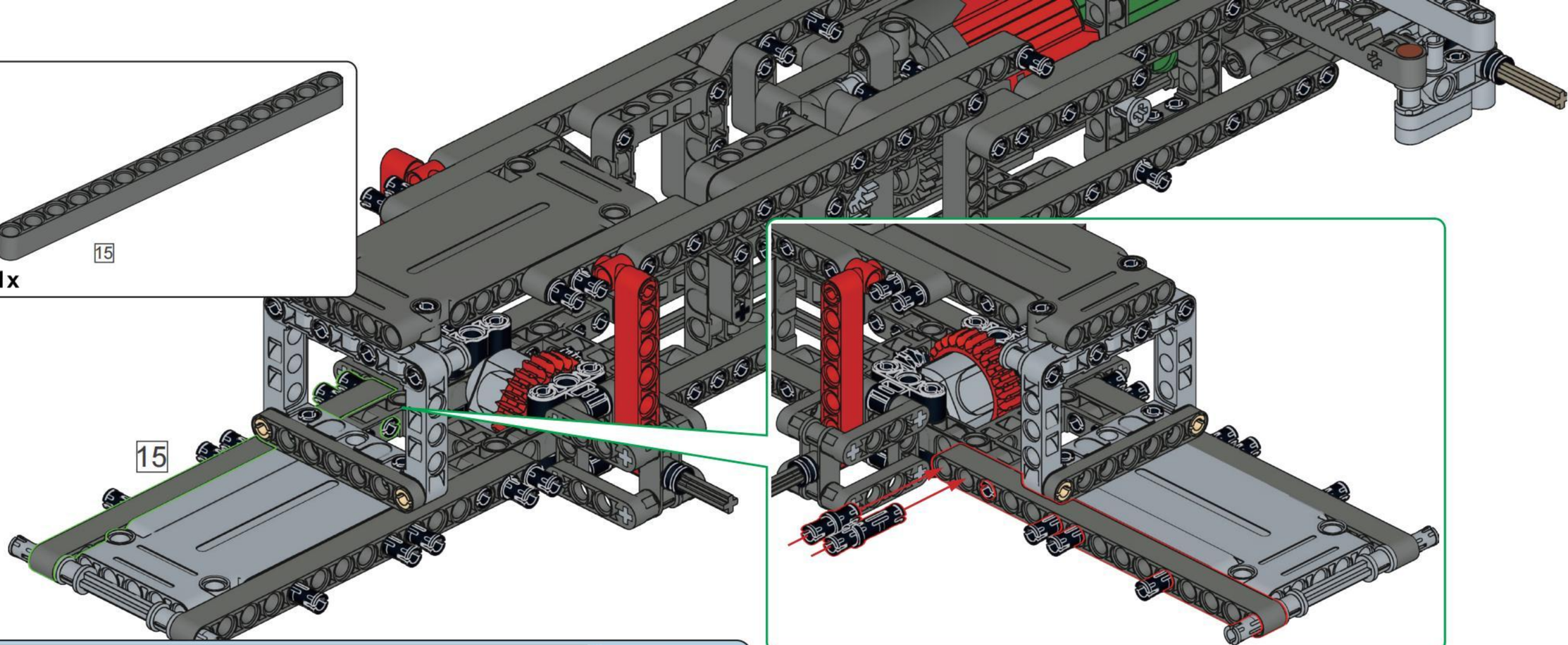


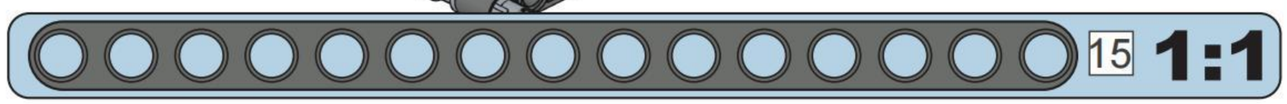


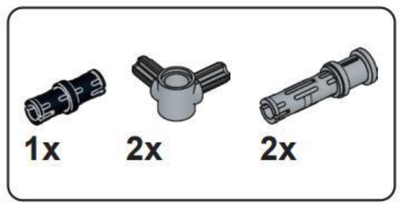


# A79

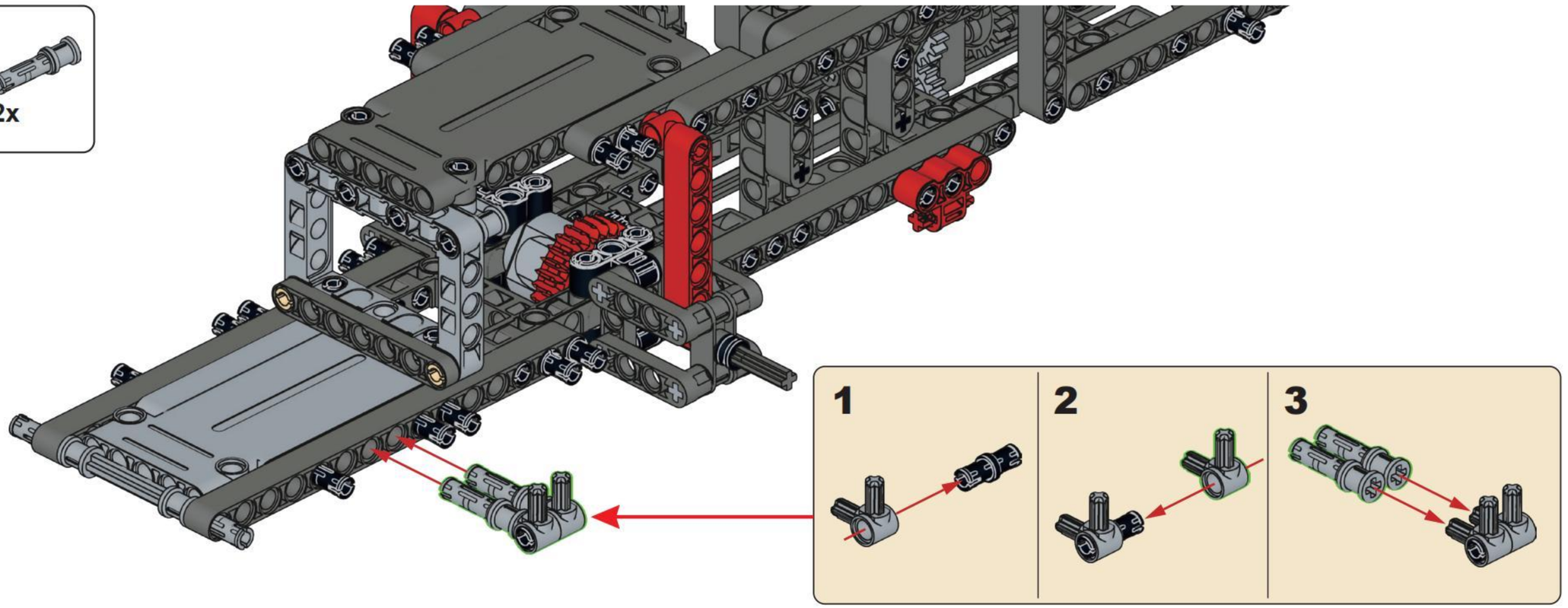

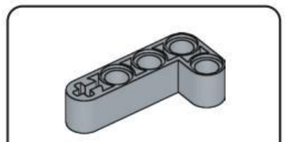


## A80

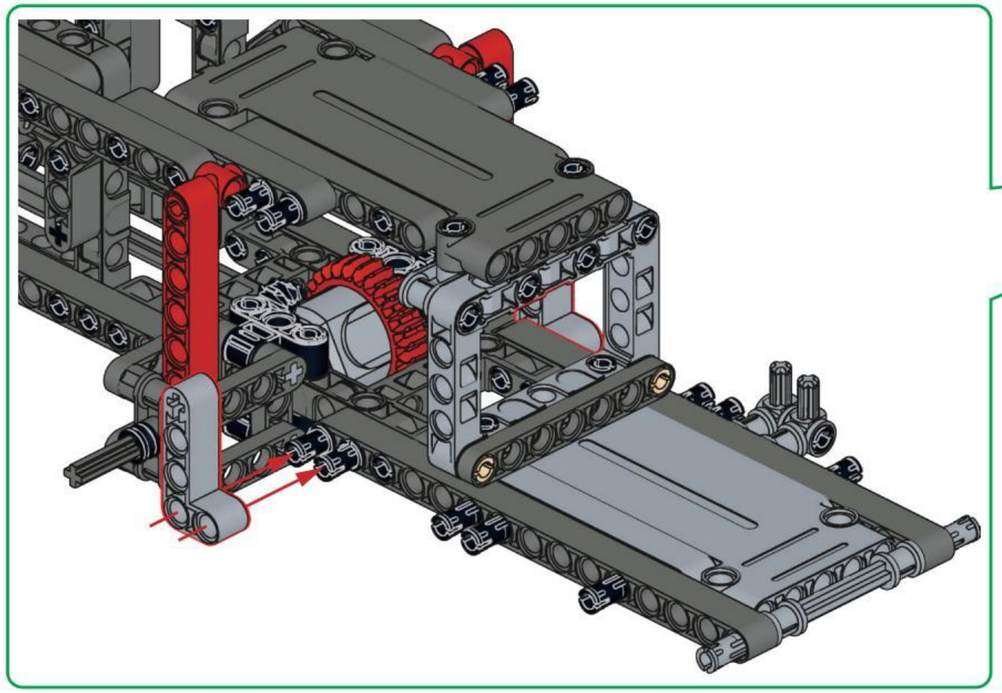

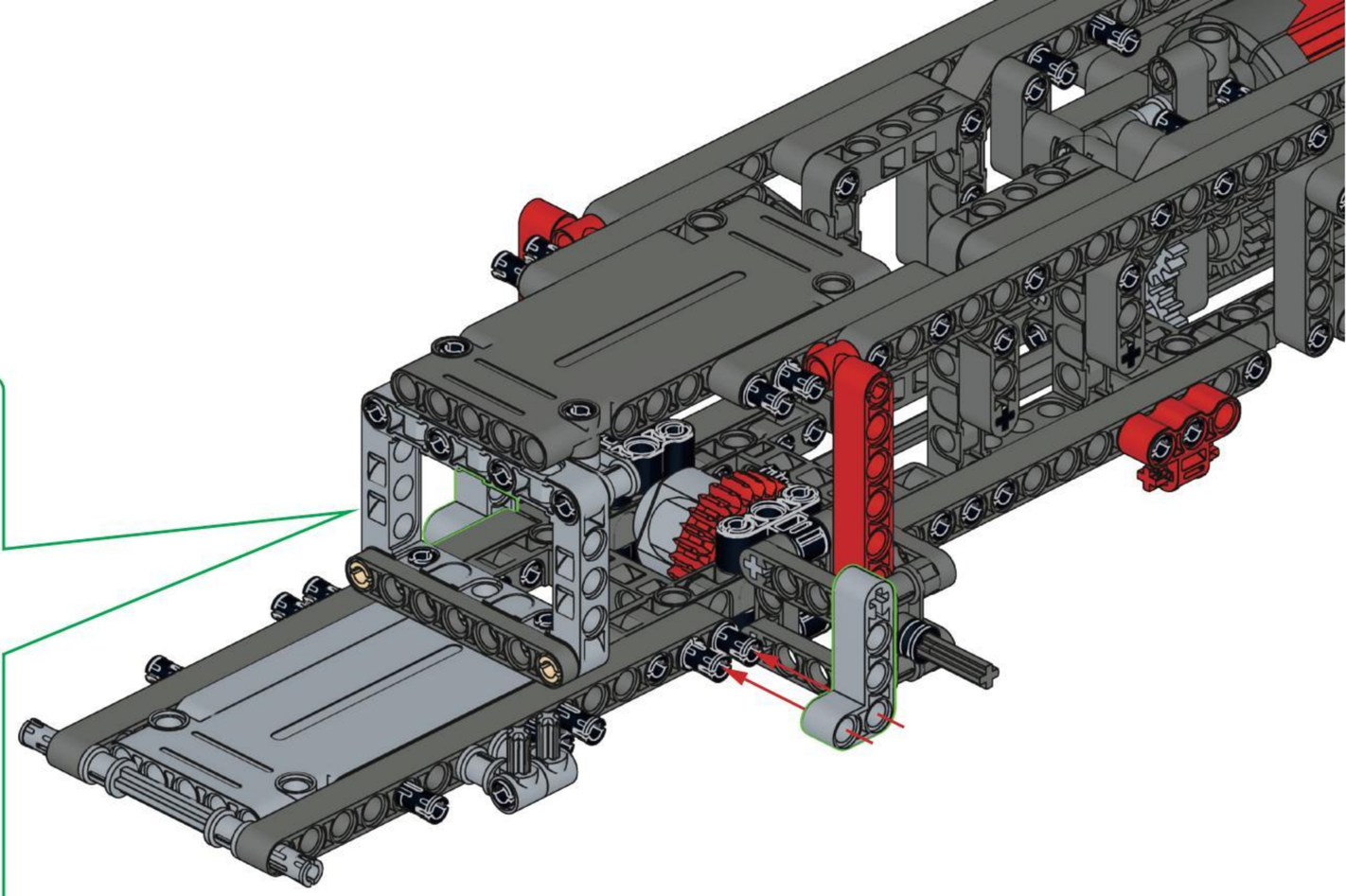

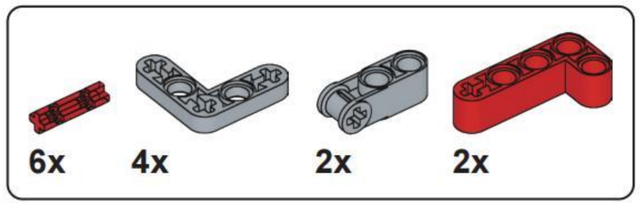


## A81

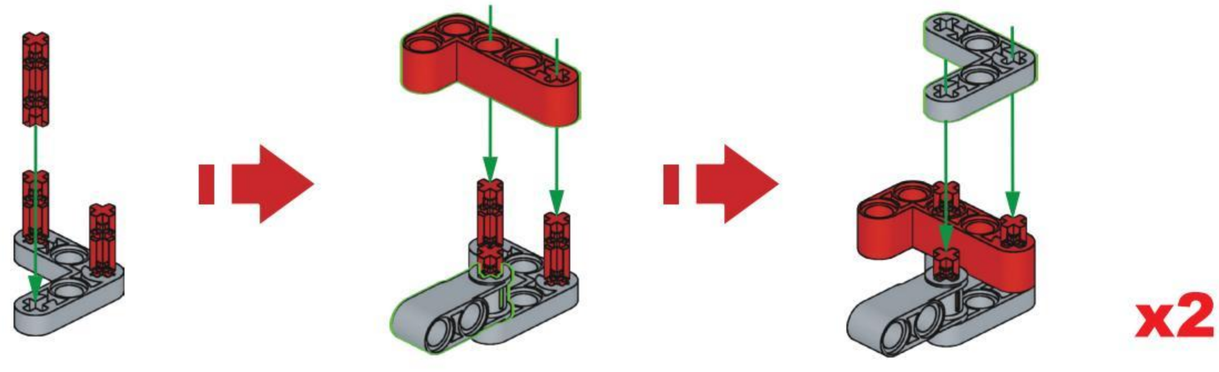

# A82

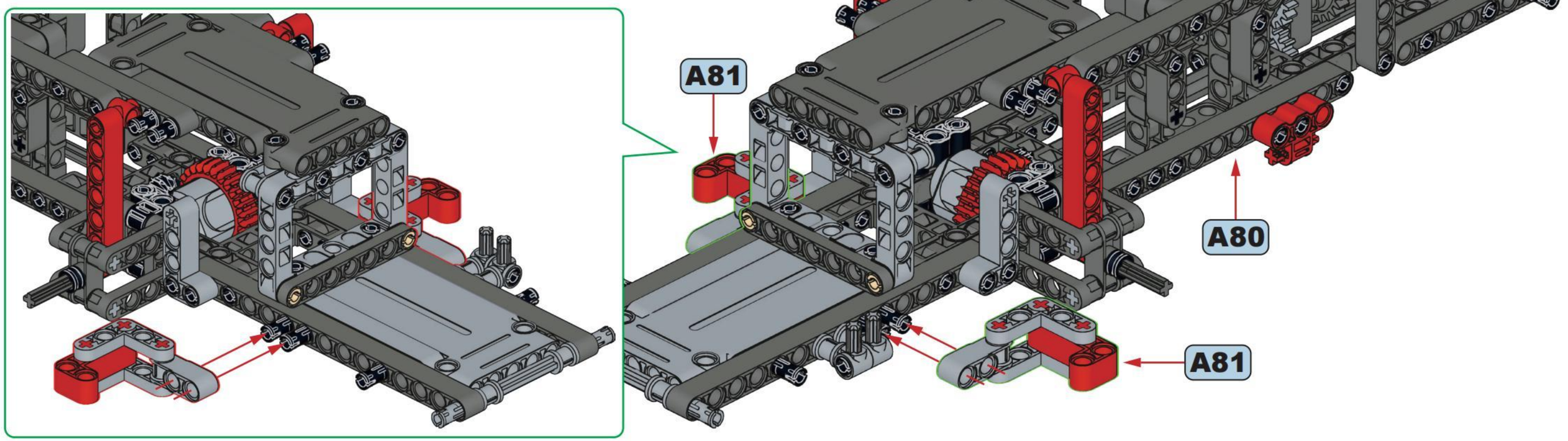

# A83

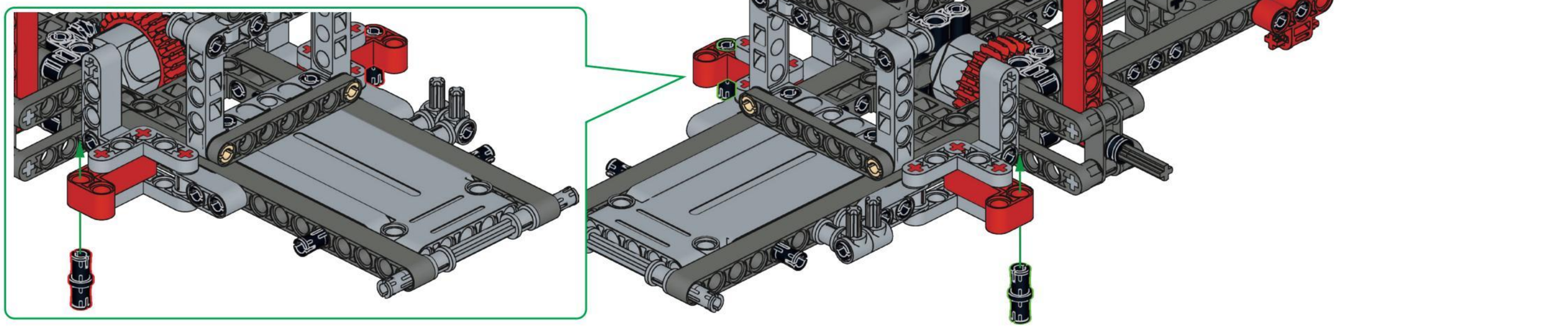

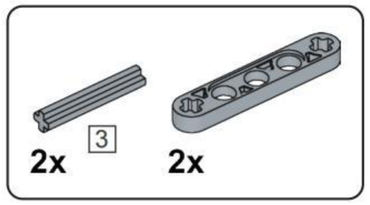


## A84

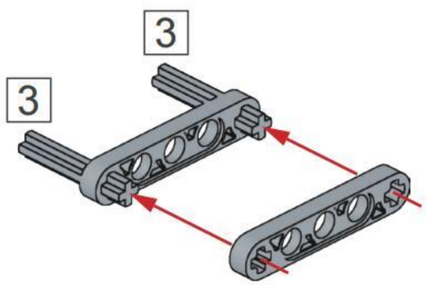


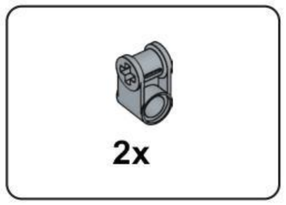


## A85

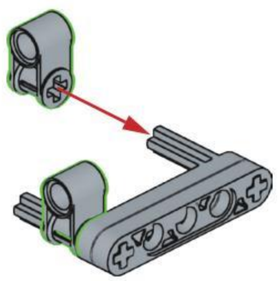

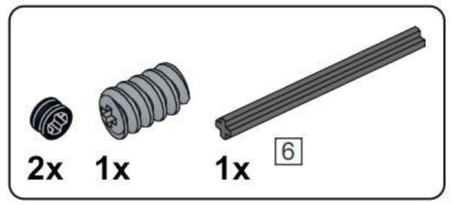


## A86

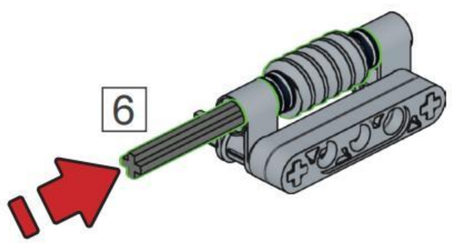

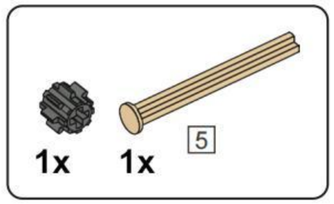


## A87

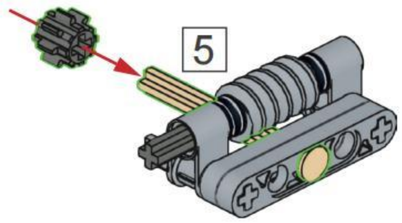


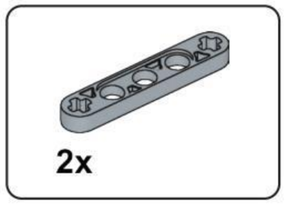


## A88

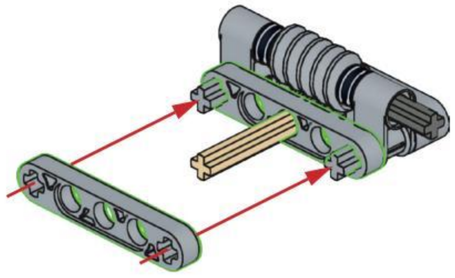

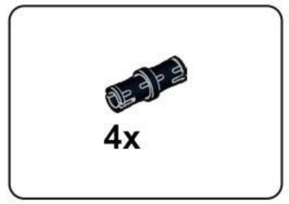


## A89

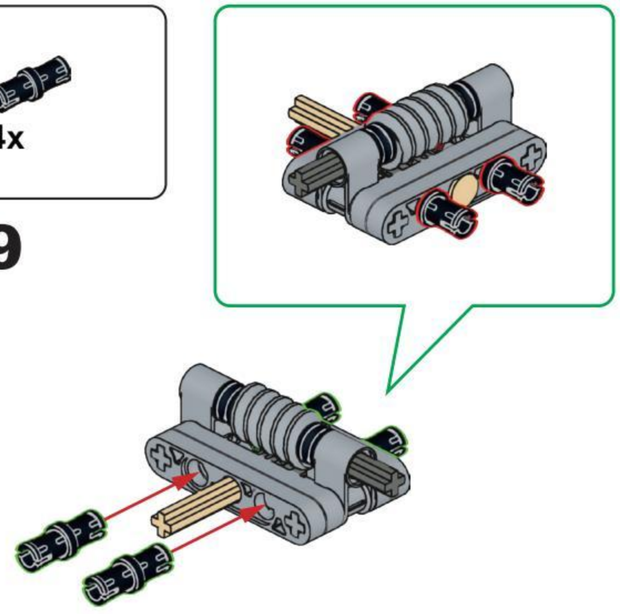

2x 1x 1x 1x

## A90

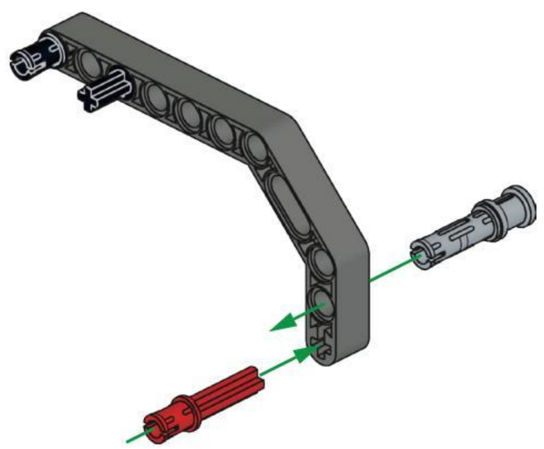

## A91

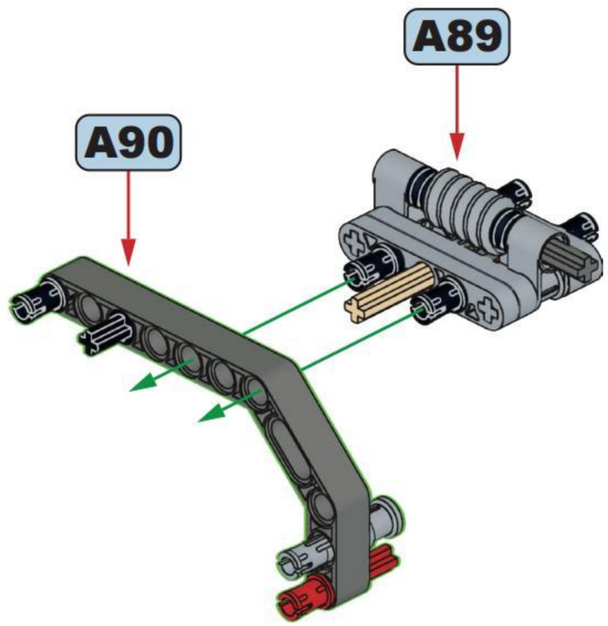


1x

## A92

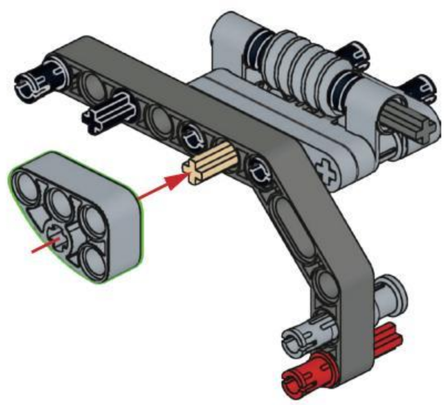

1x 3 1x

## A93

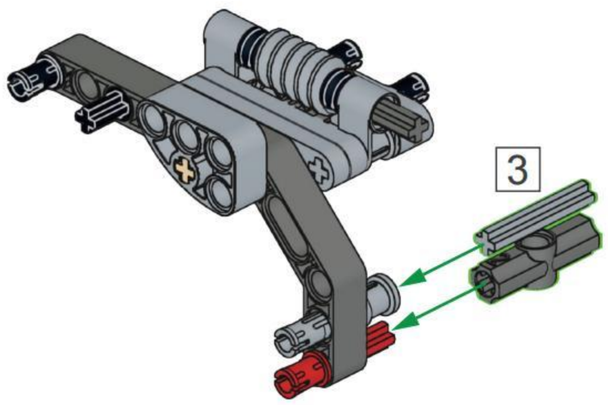


3 1:1

2x 1x 1x 1x

## A94

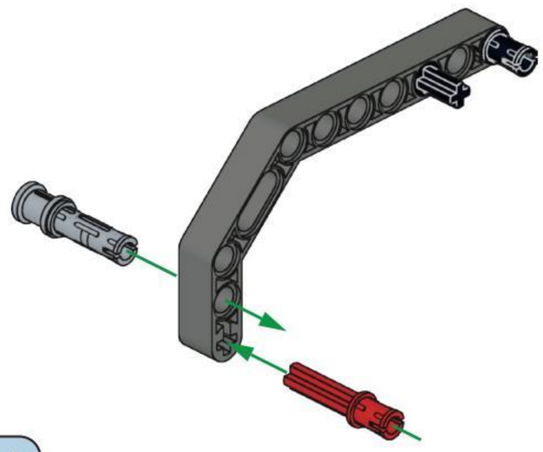

## A95

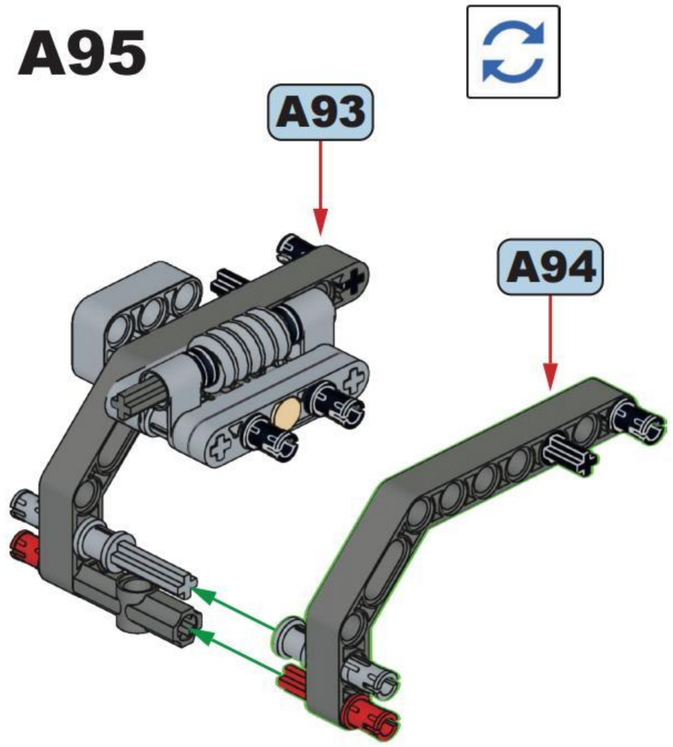

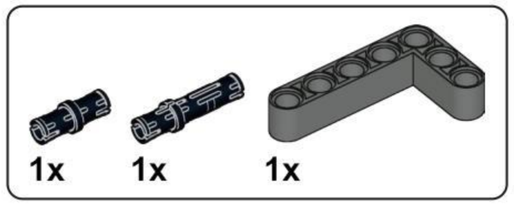


## A96

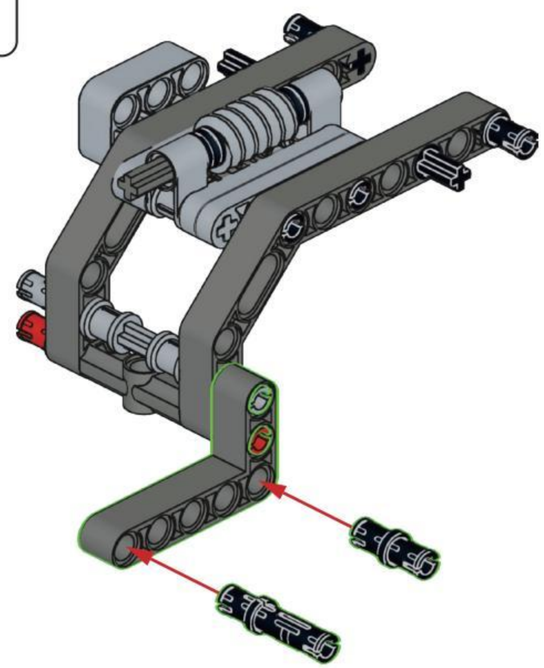

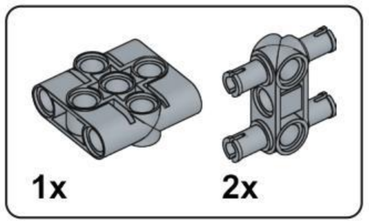


## A97

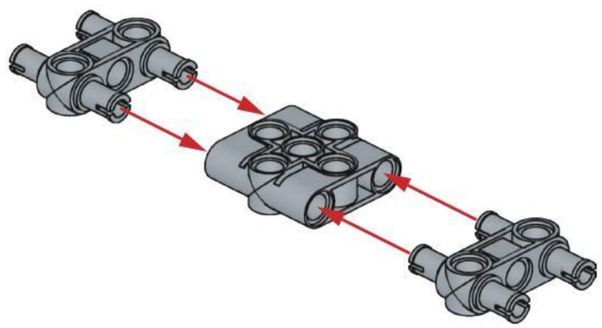

## A98

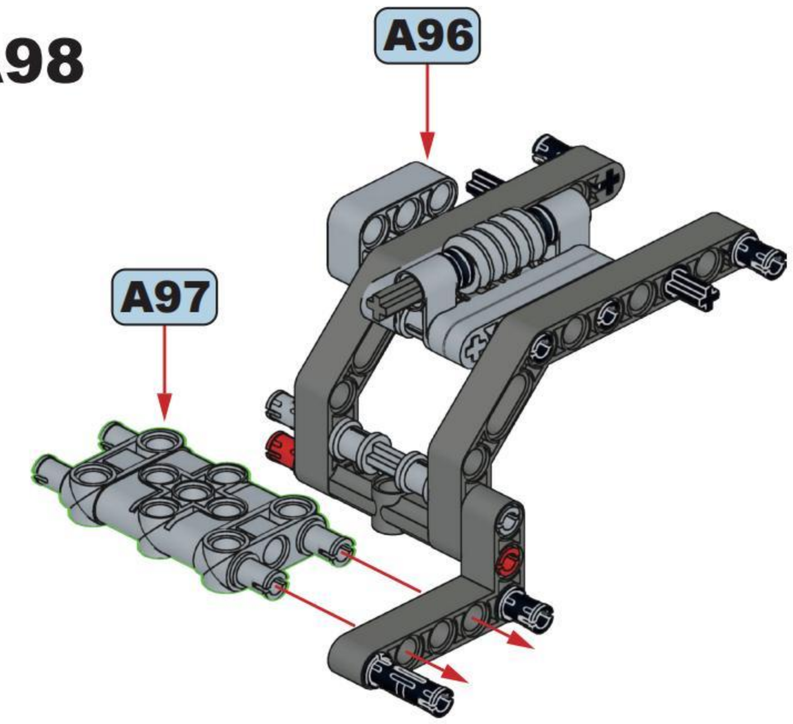


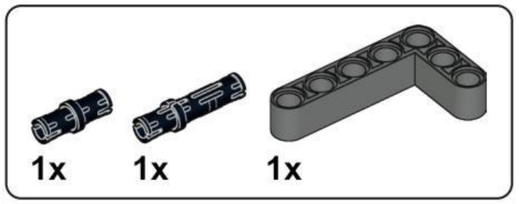


## A99

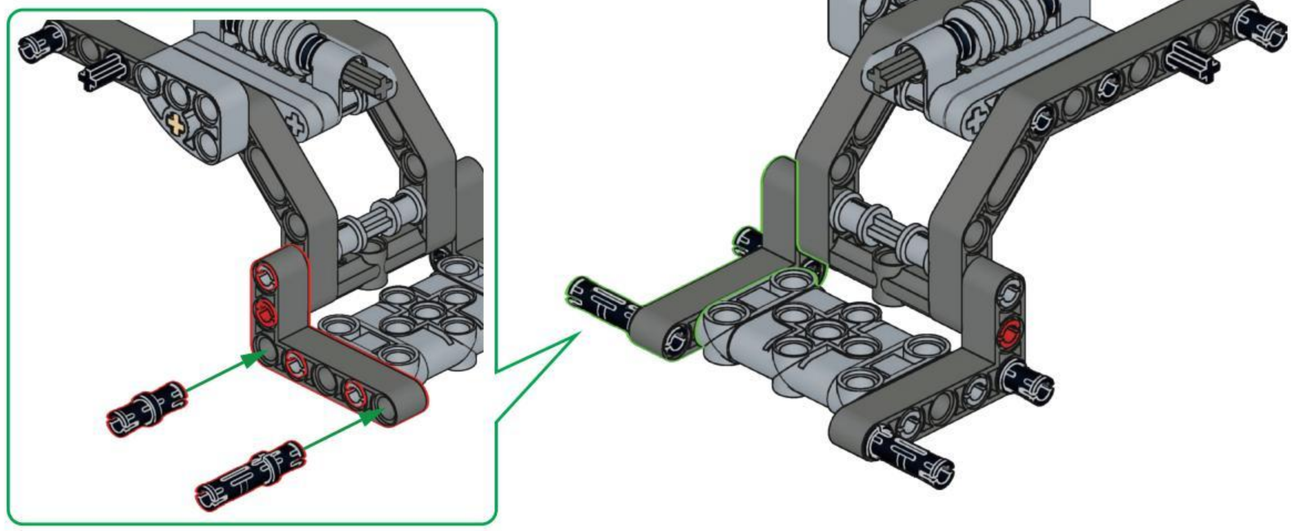

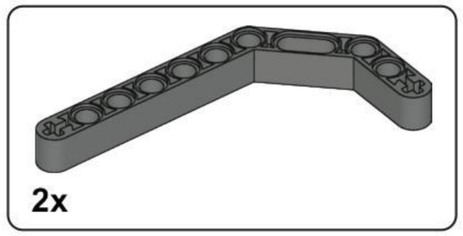


## A100

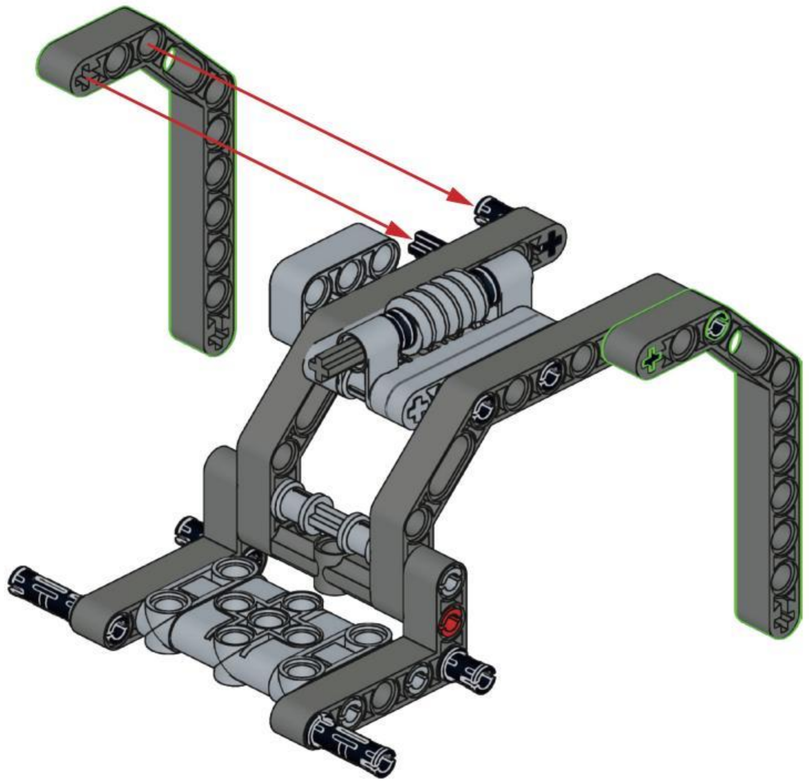




## A101

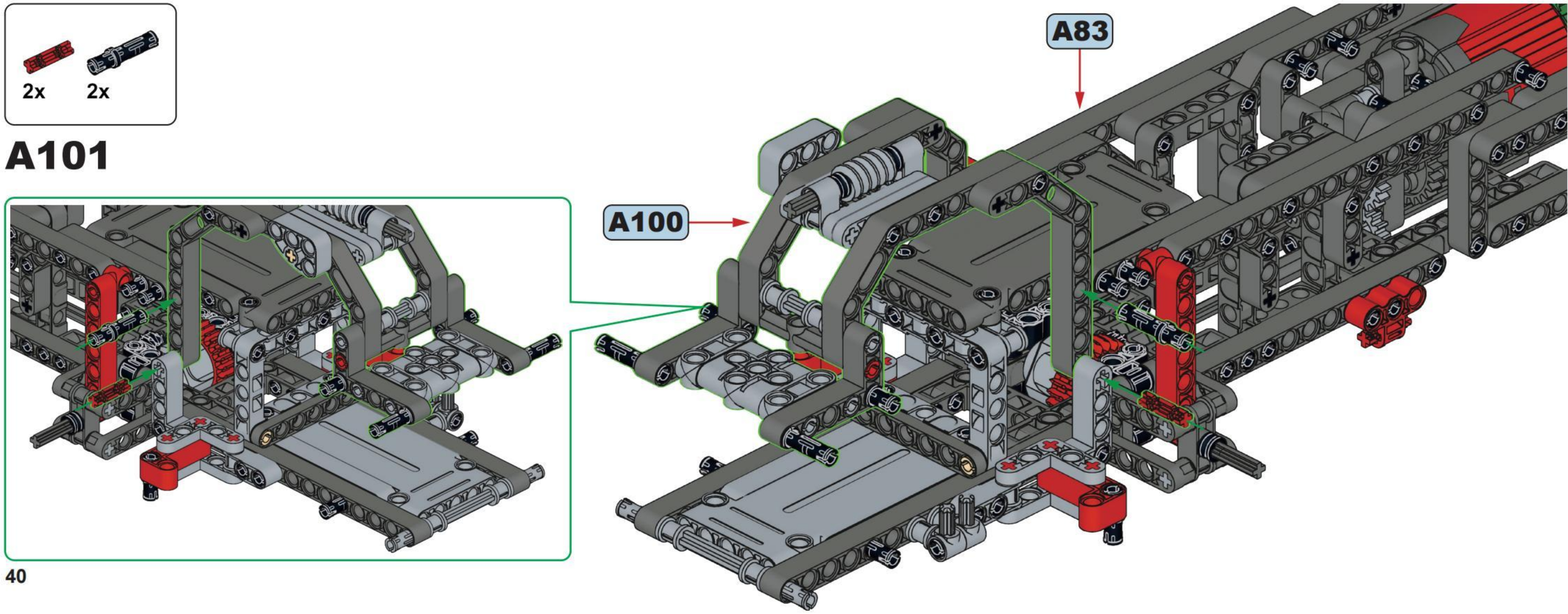

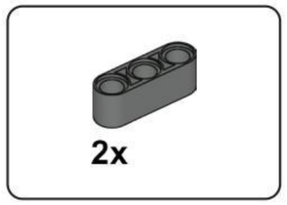


## A102

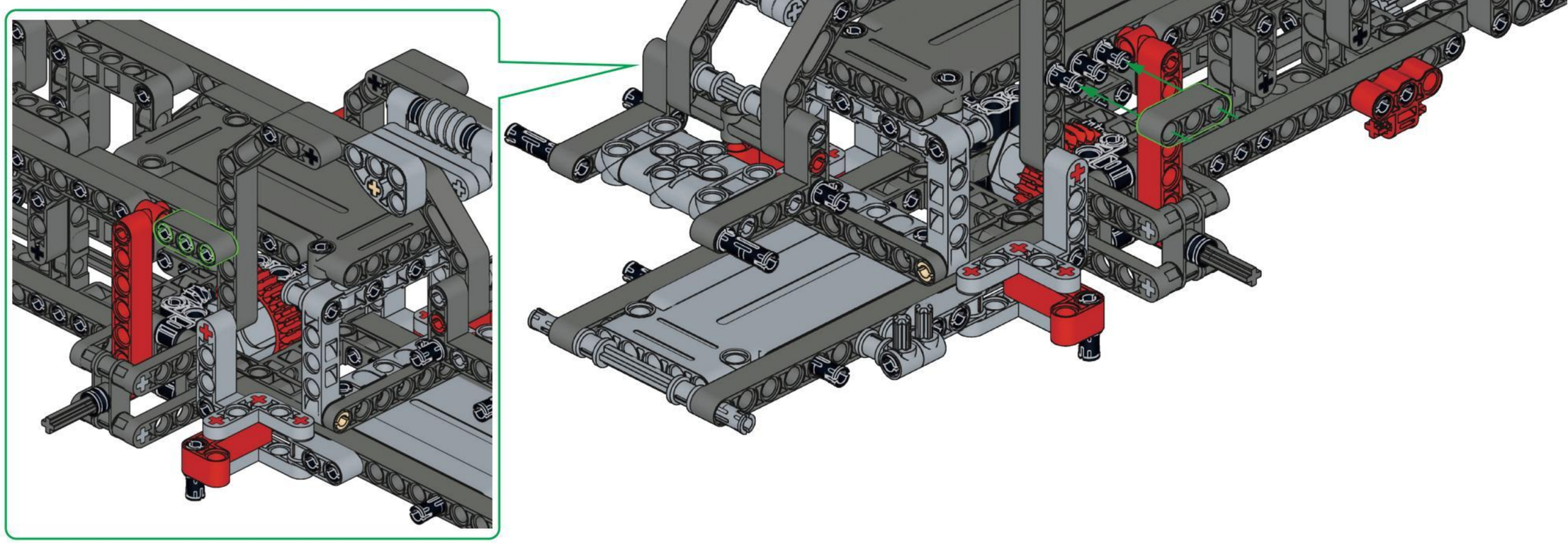

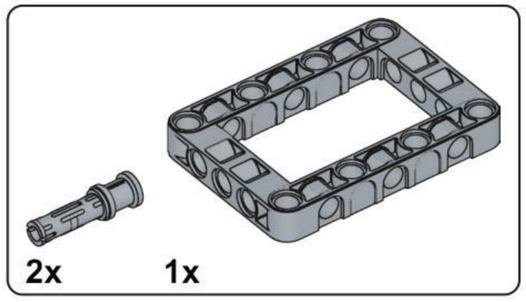


## A103

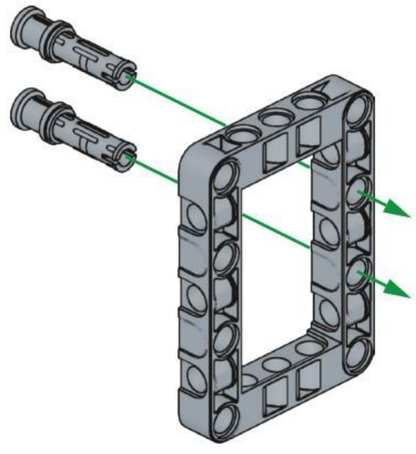

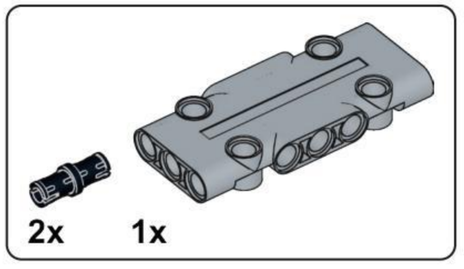


## A104

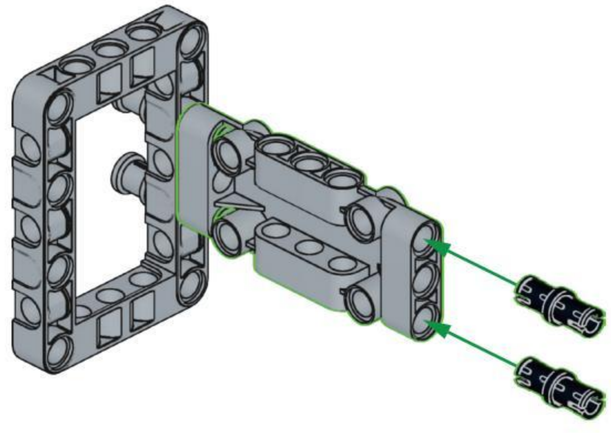

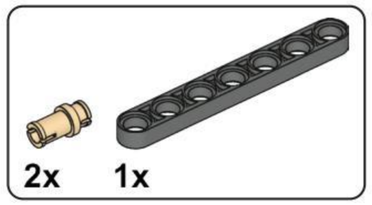


## A105

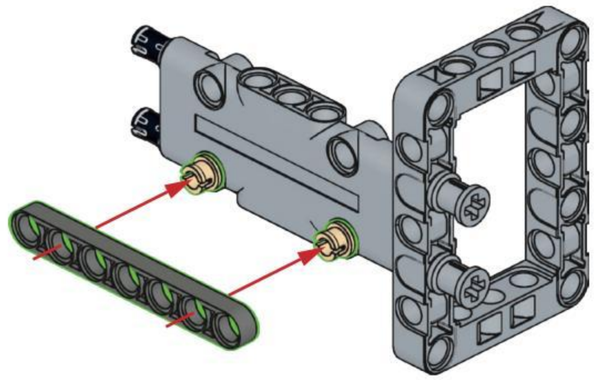

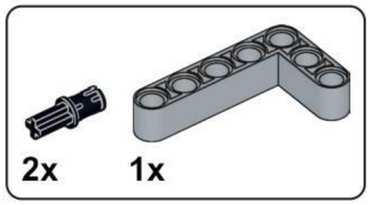


## A106

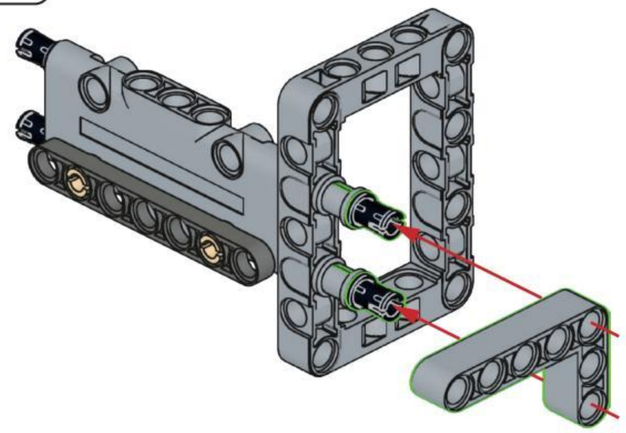

## A107

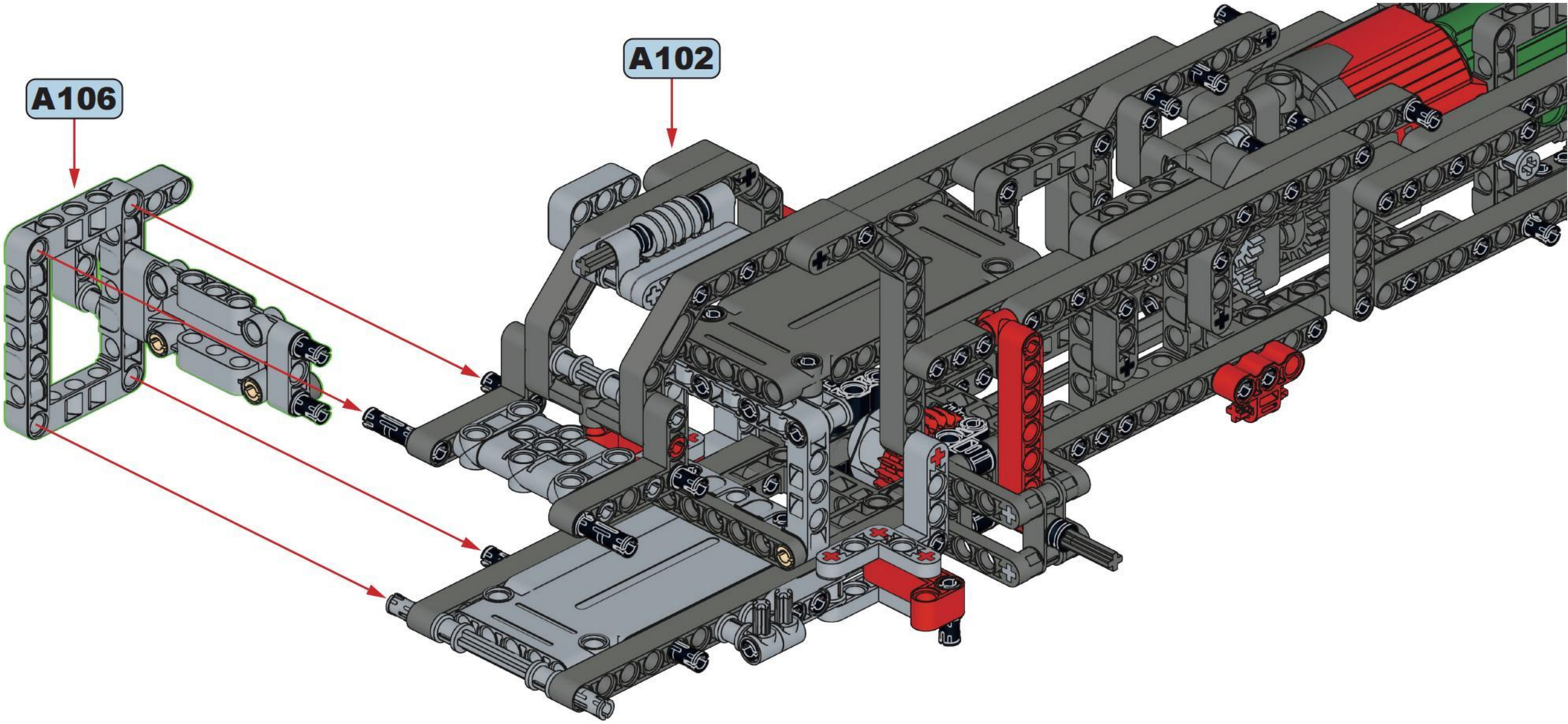

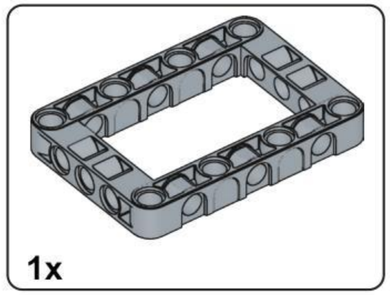


# A108

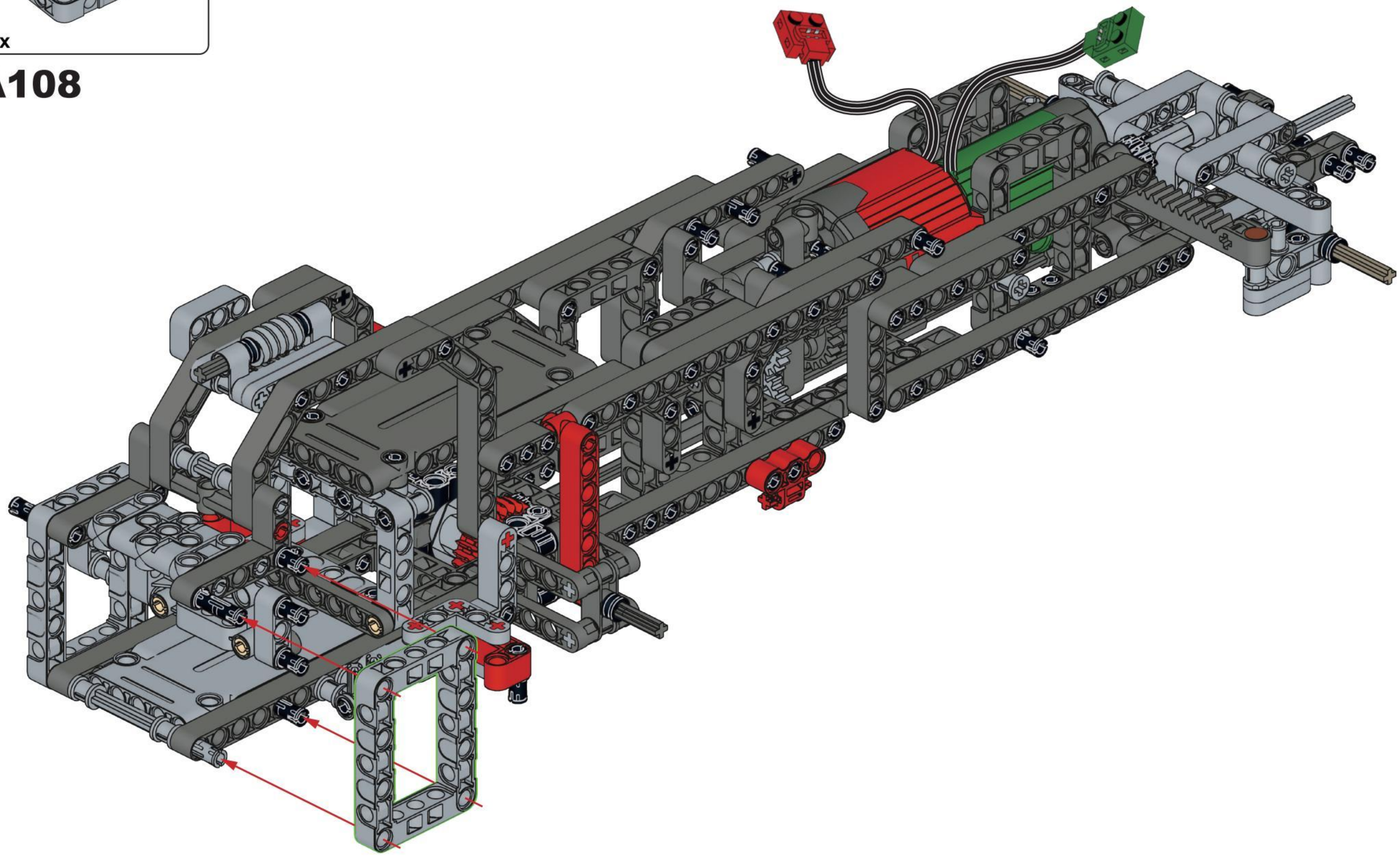

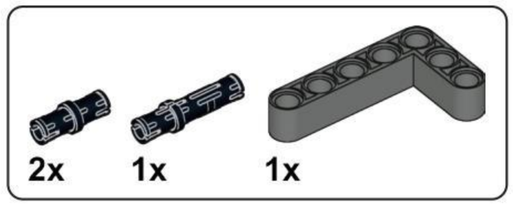


# A109

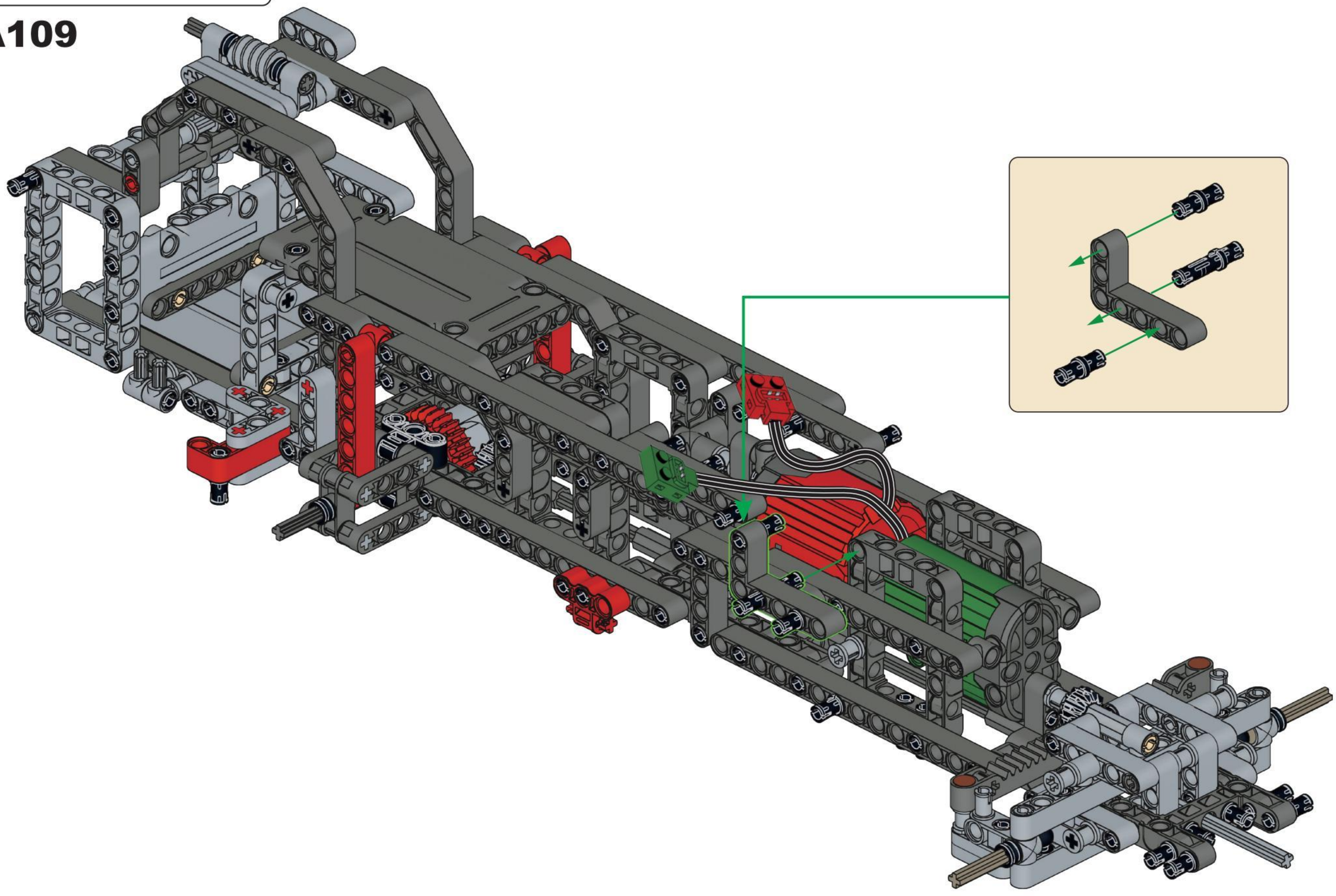

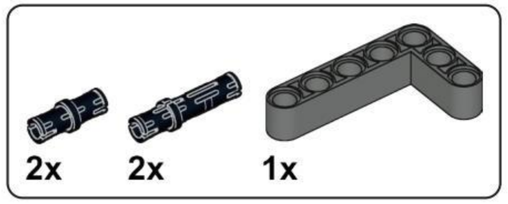


# A110

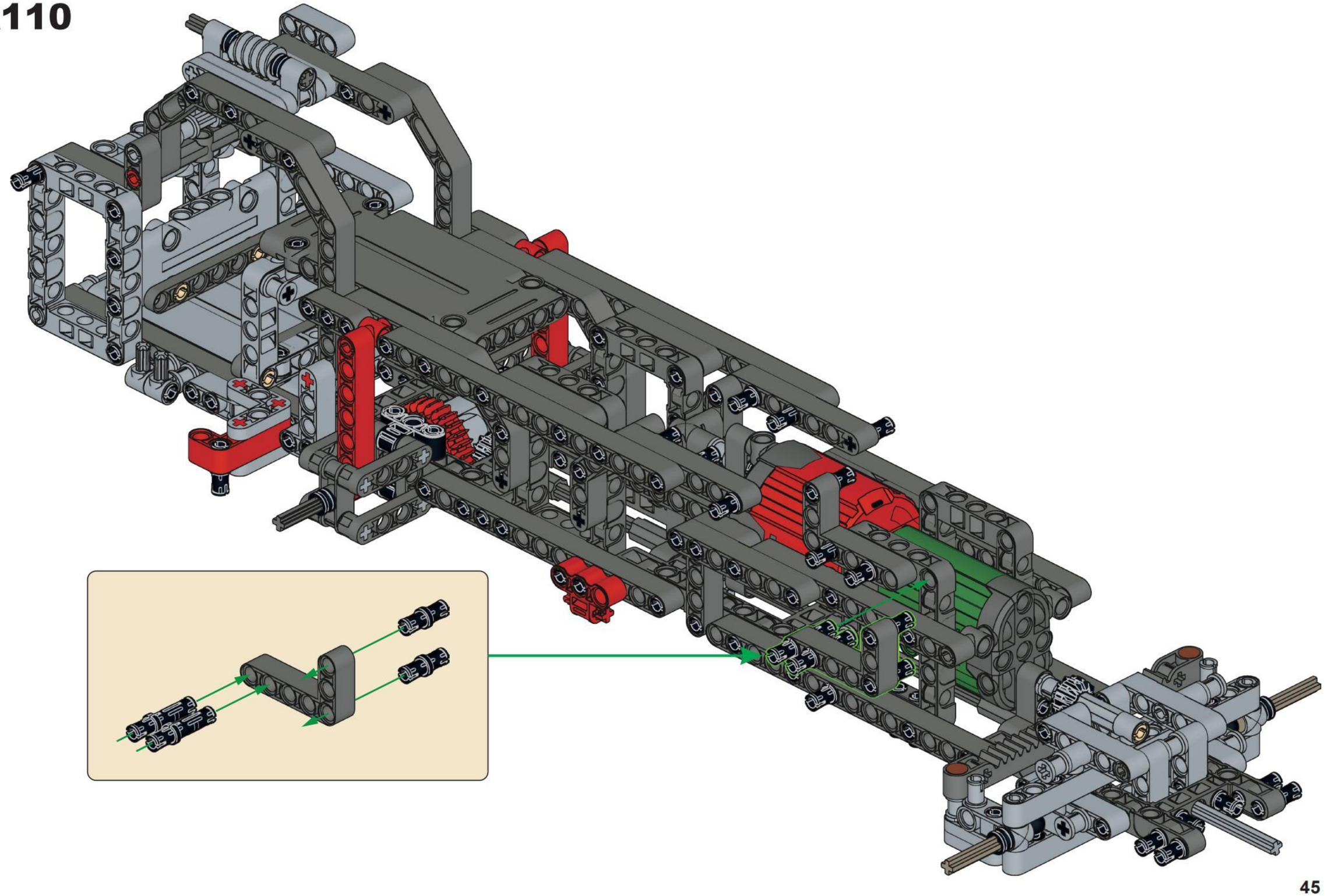

# A111

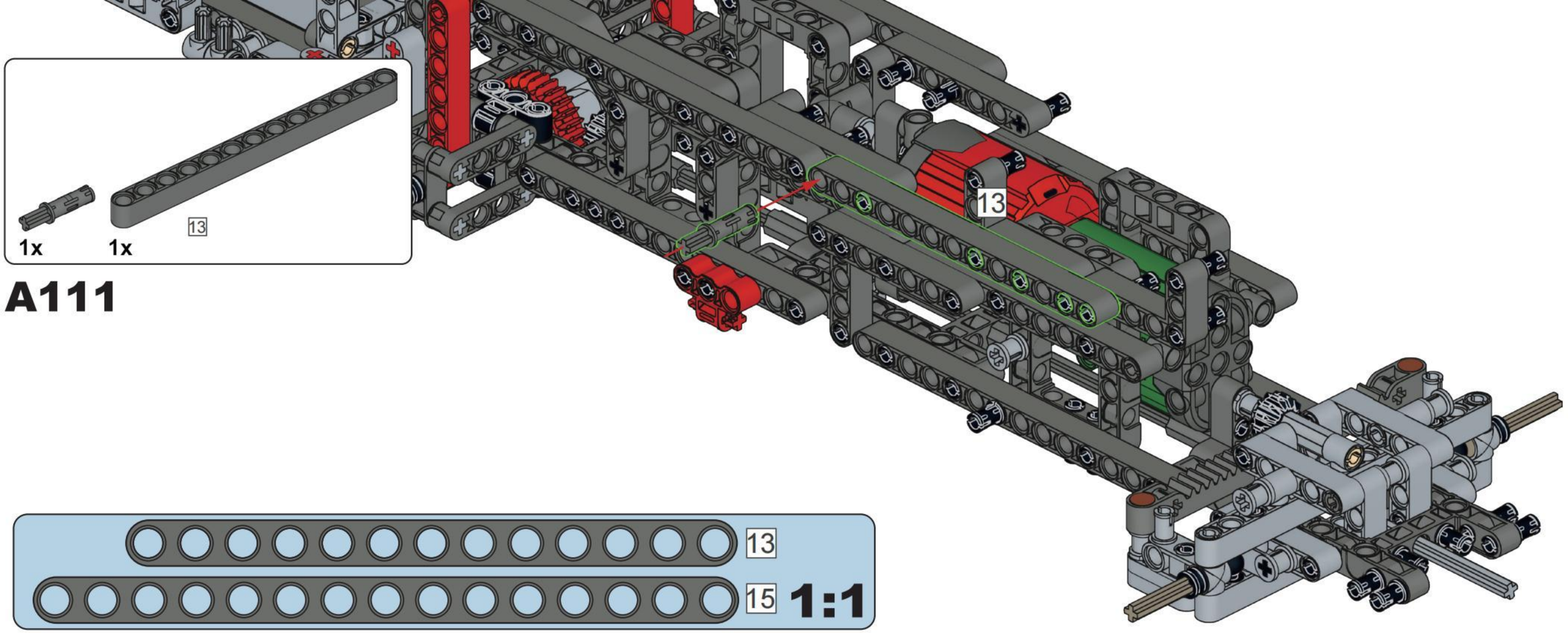





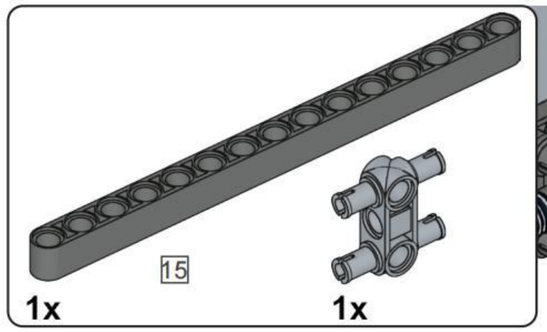


# A112

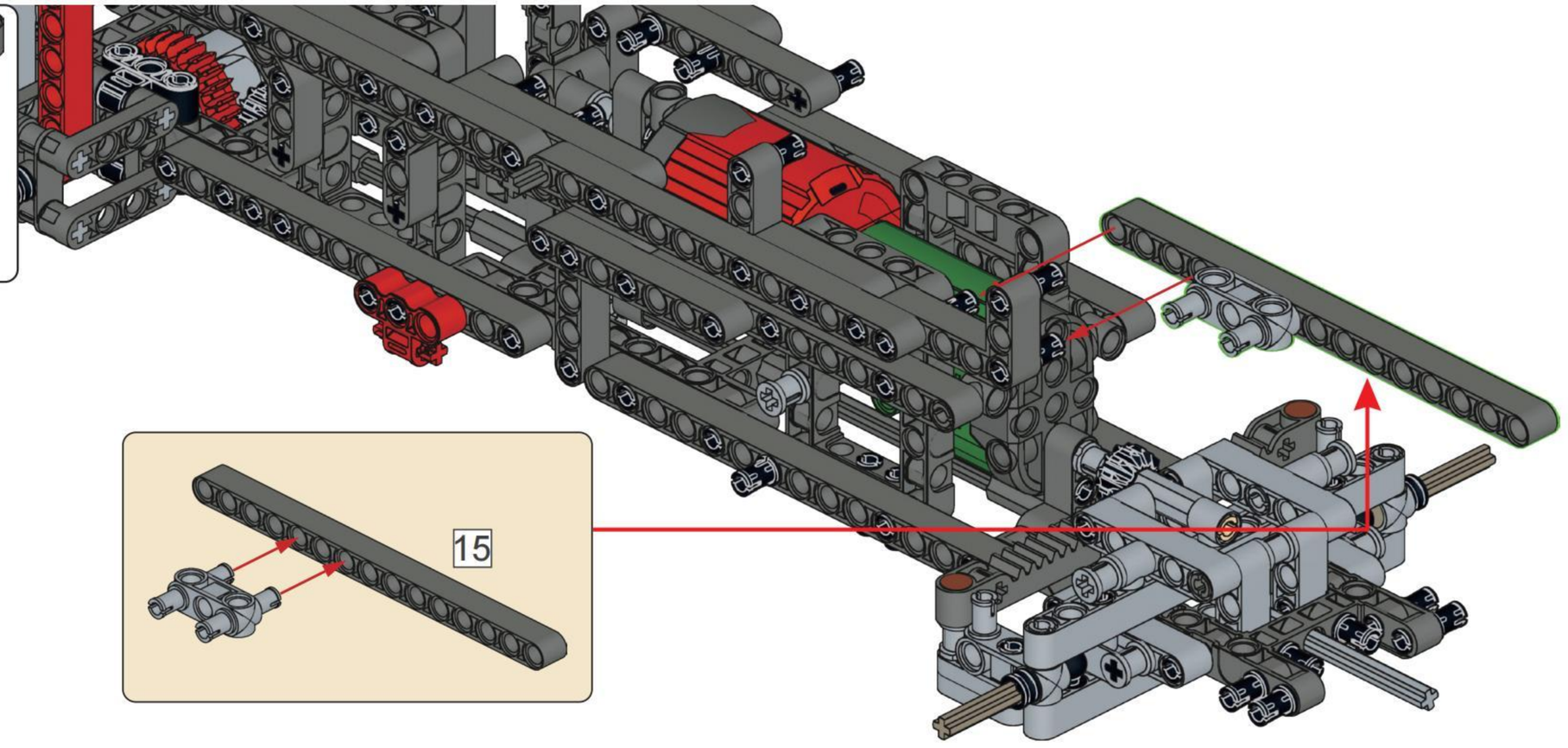

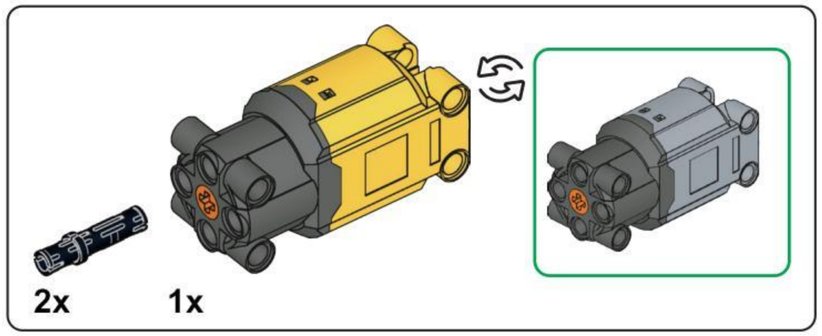


## A113

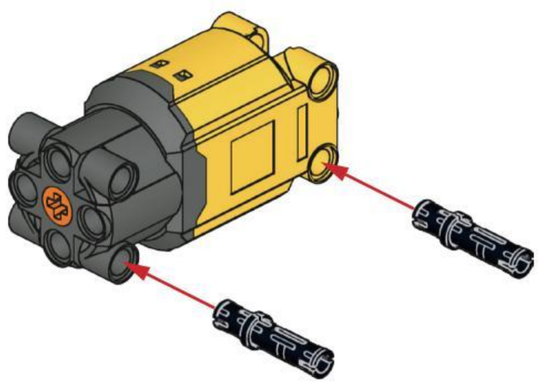

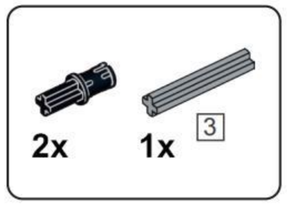


## A114

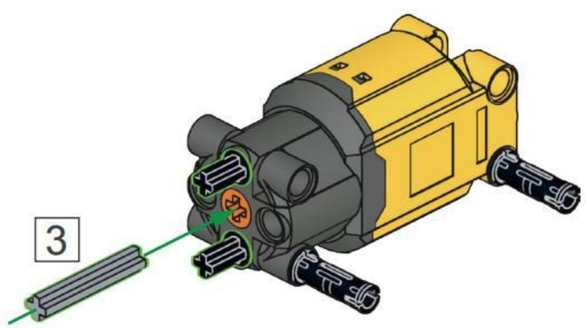


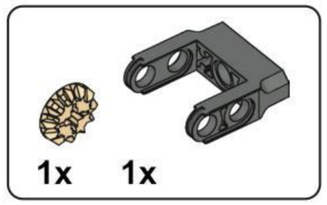


## A115

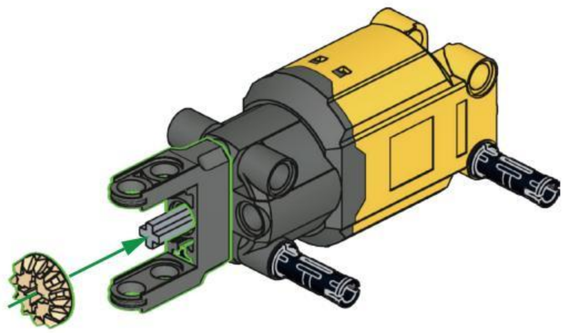

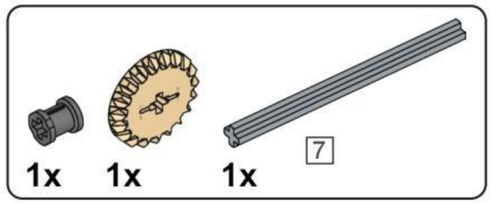


## A116

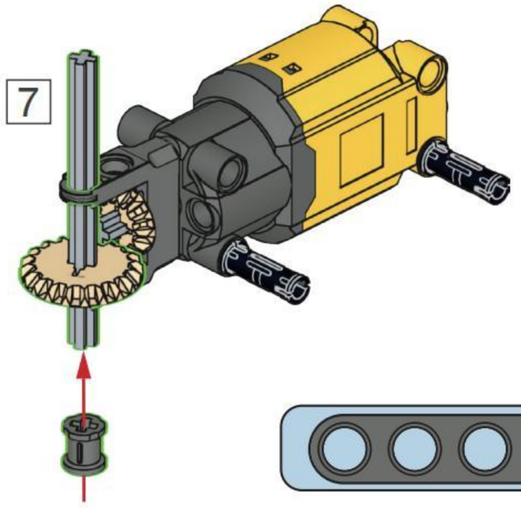


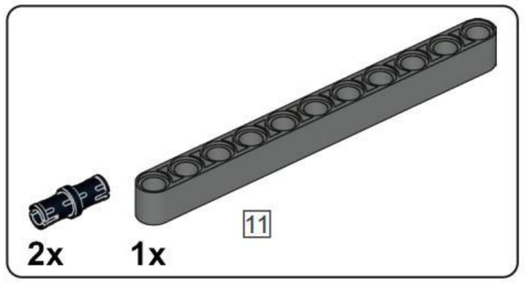


## A117

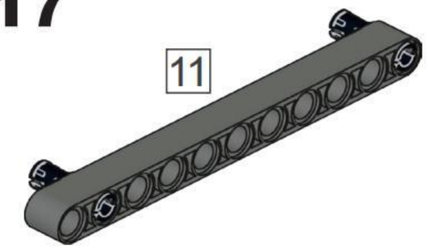


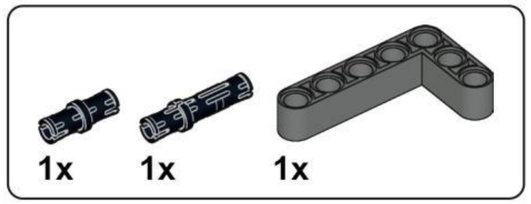


## A118

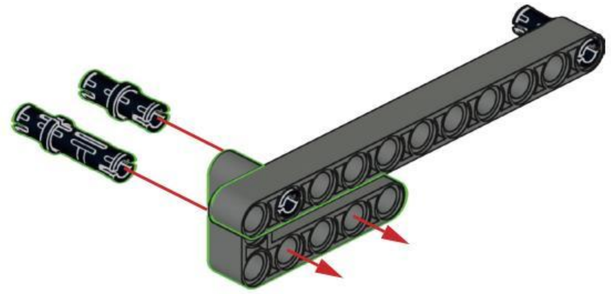

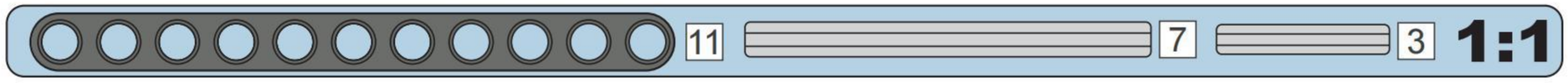

## A119

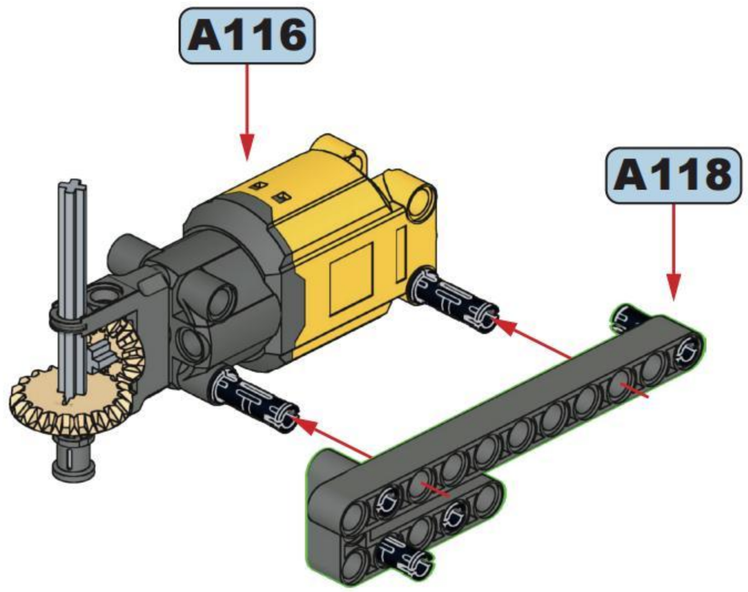


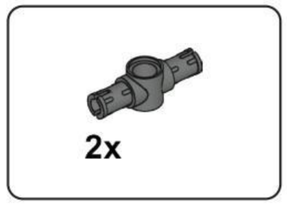


## A120

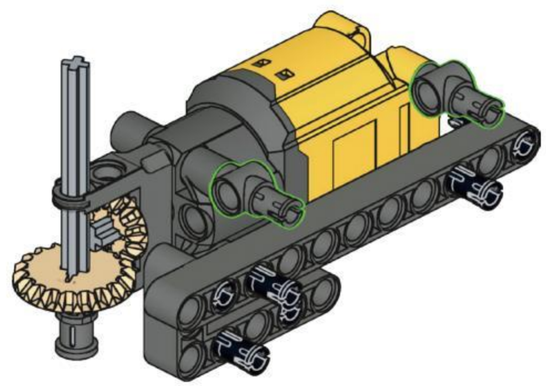

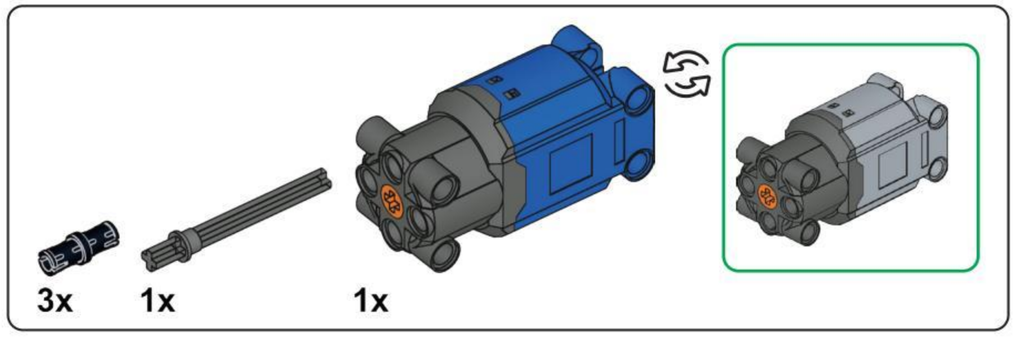


## A121

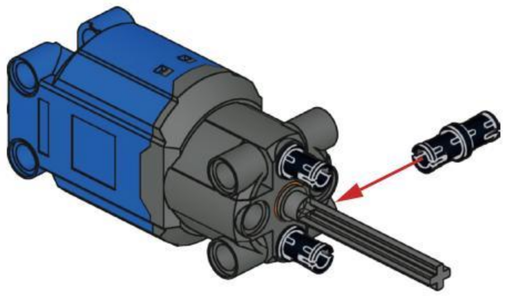

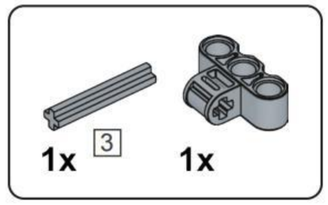


## A122

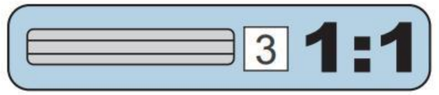


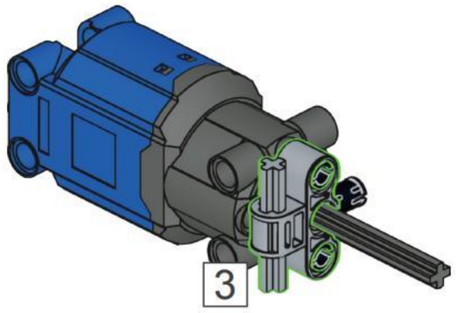


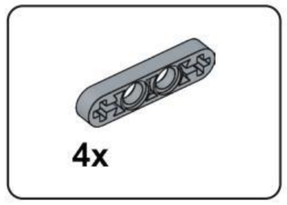


## A123

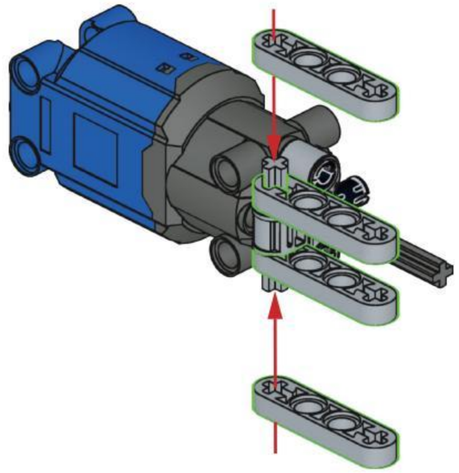

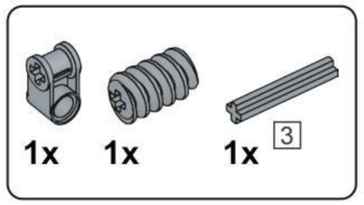


# A124

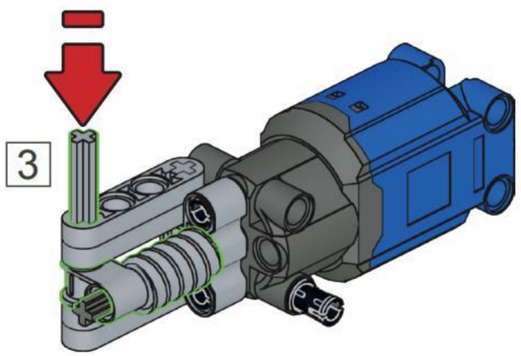


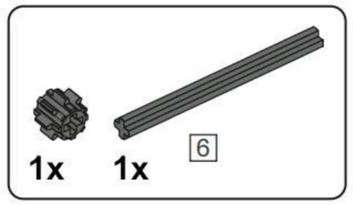


# A125

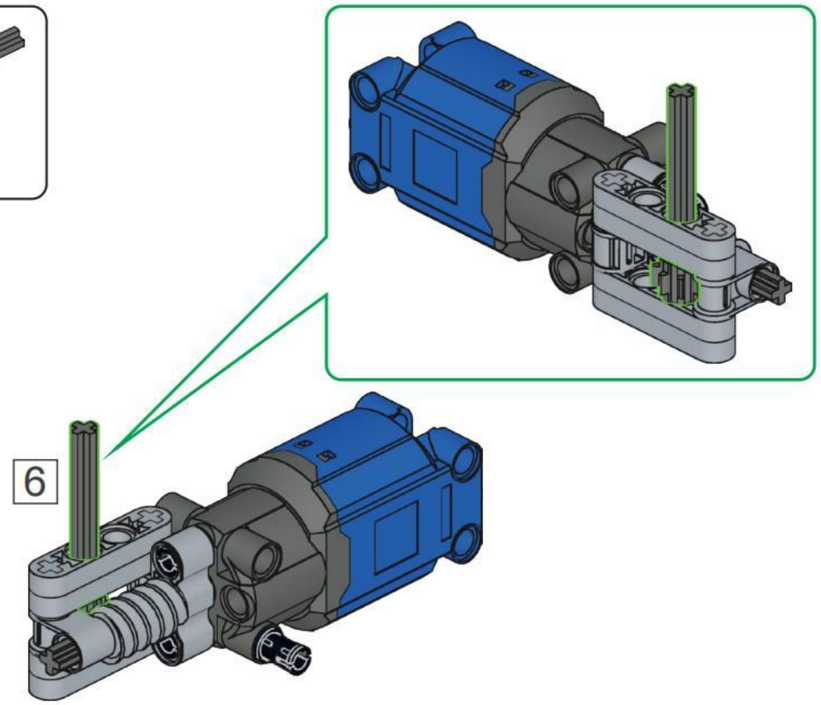


# A126

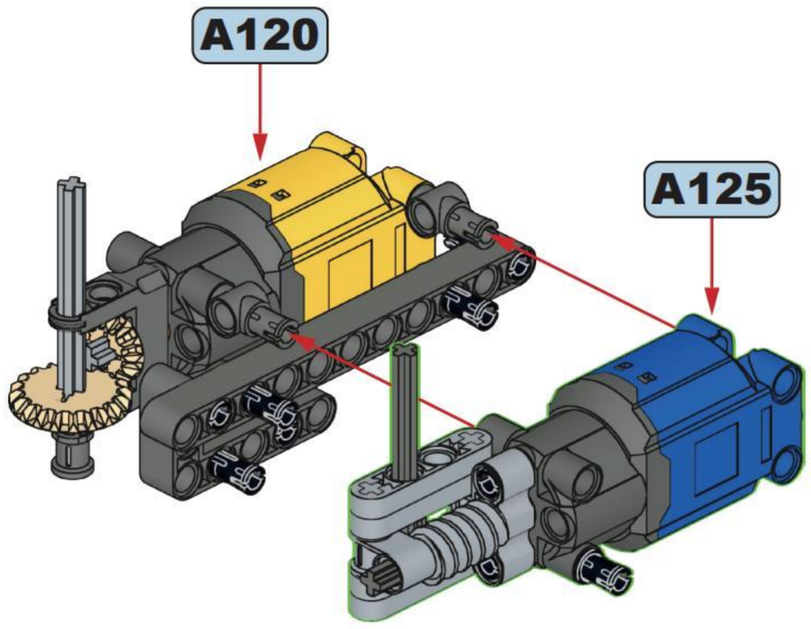


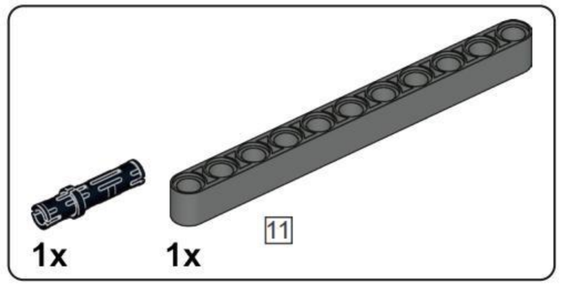


# A127

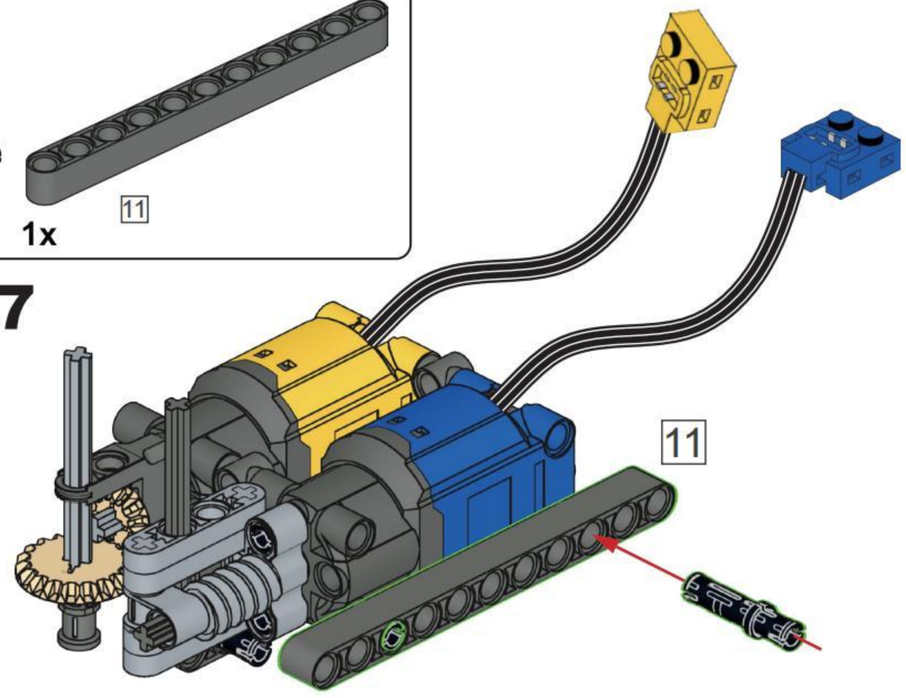


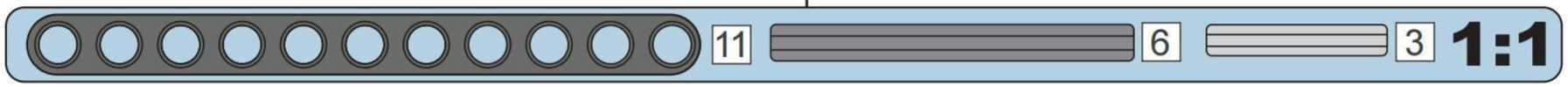

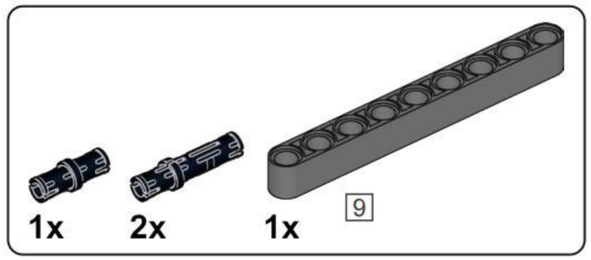


## A128

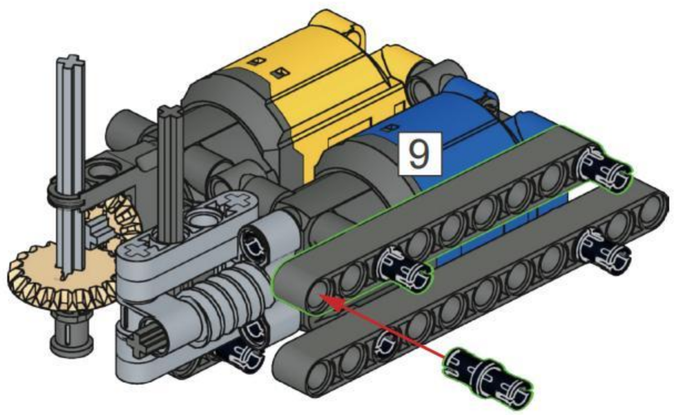


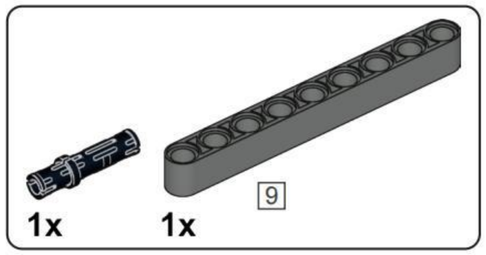


## A129

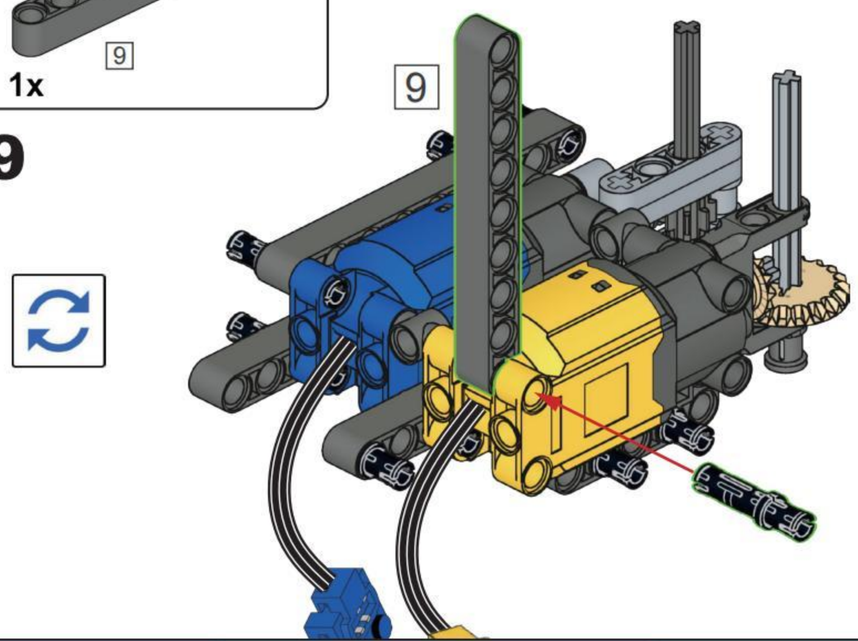


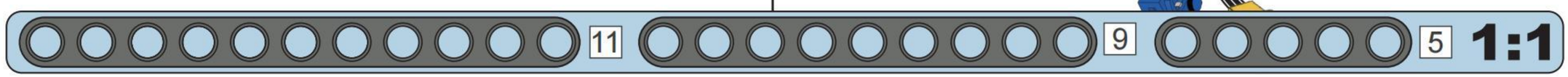


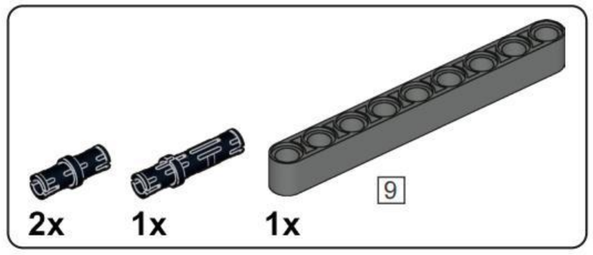


## A130

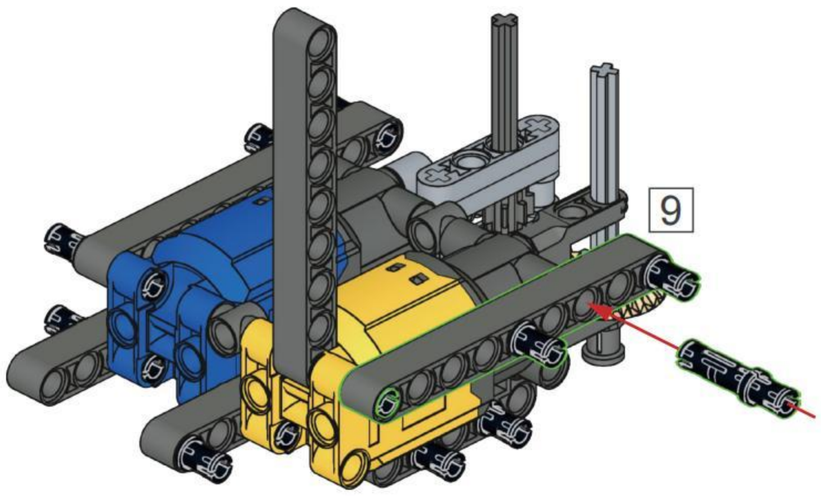


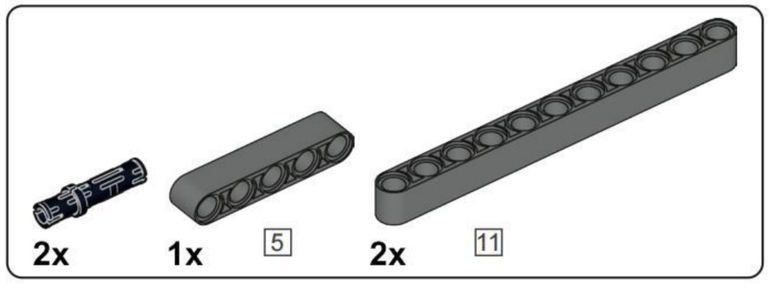


## A131

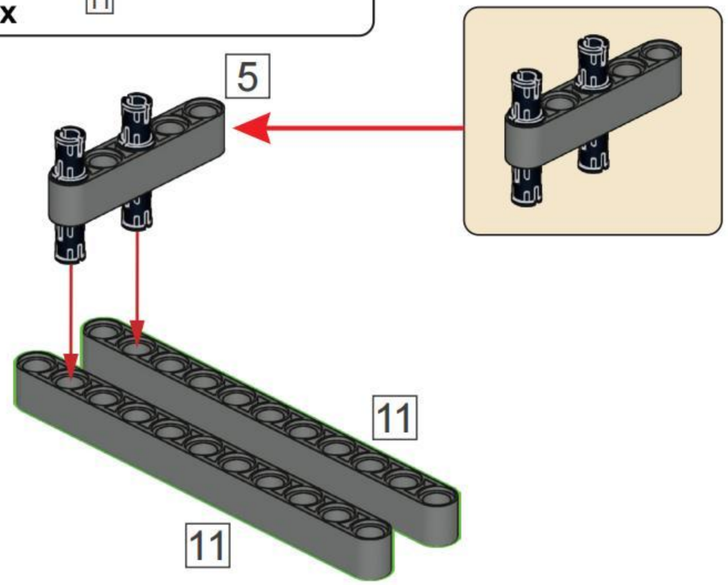

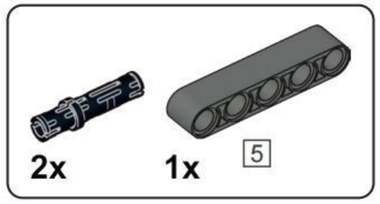


## A132

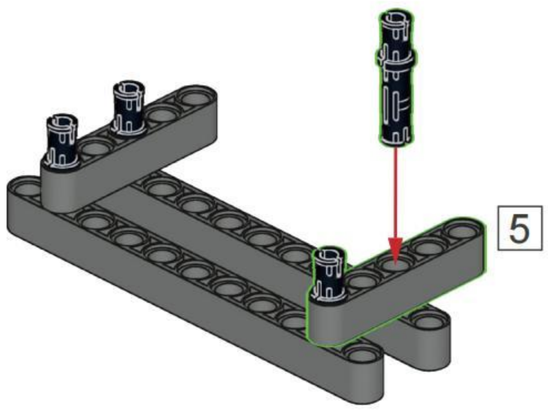


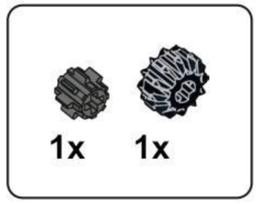


## A133

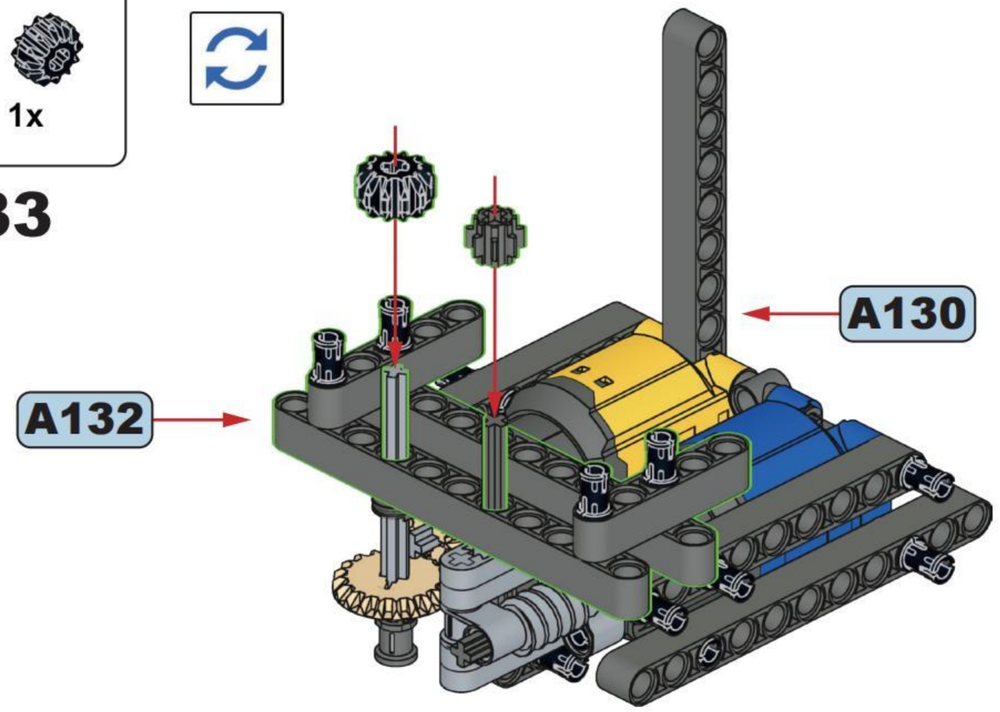


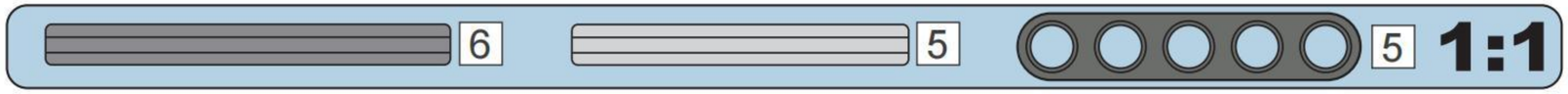


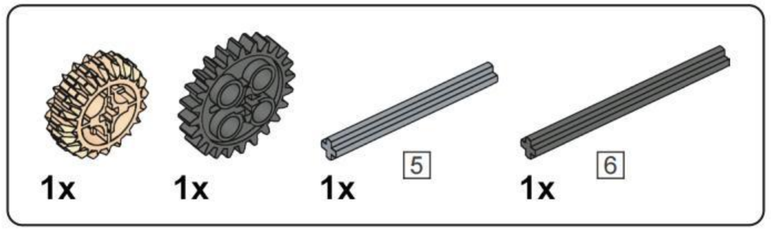


## A134

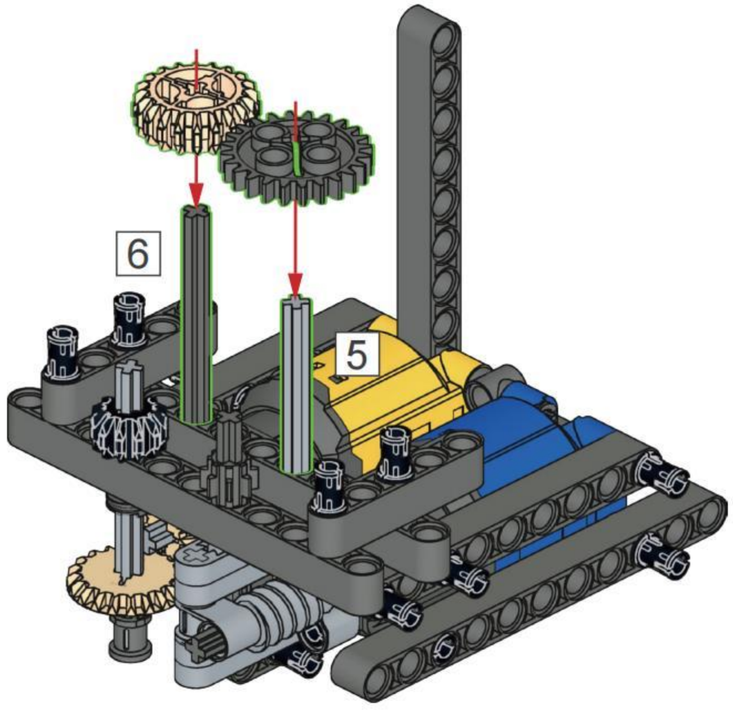

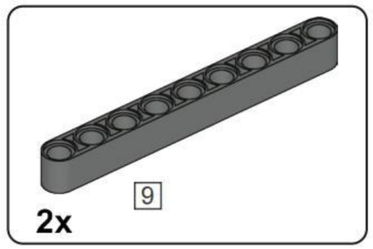


# A135

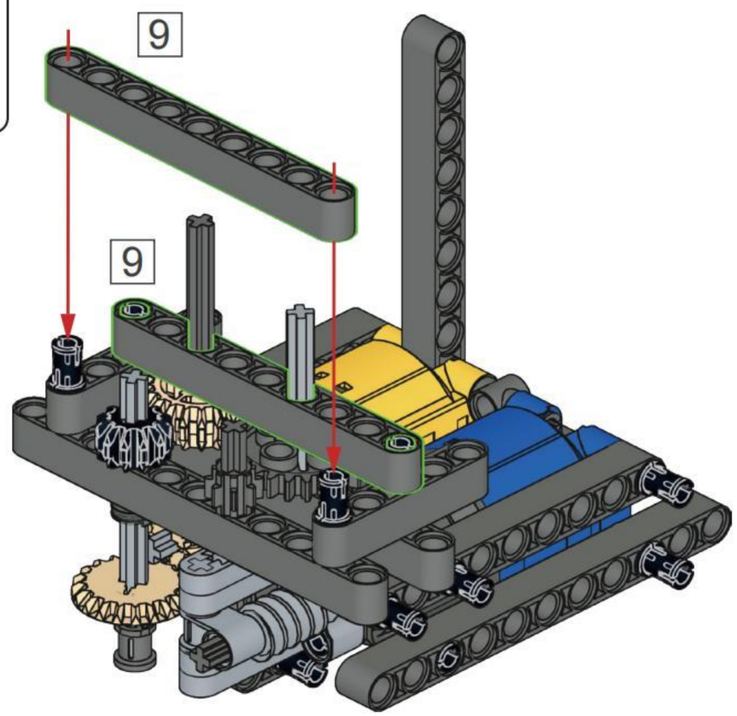


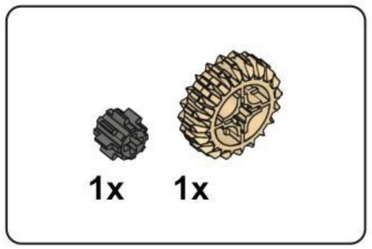


# A136

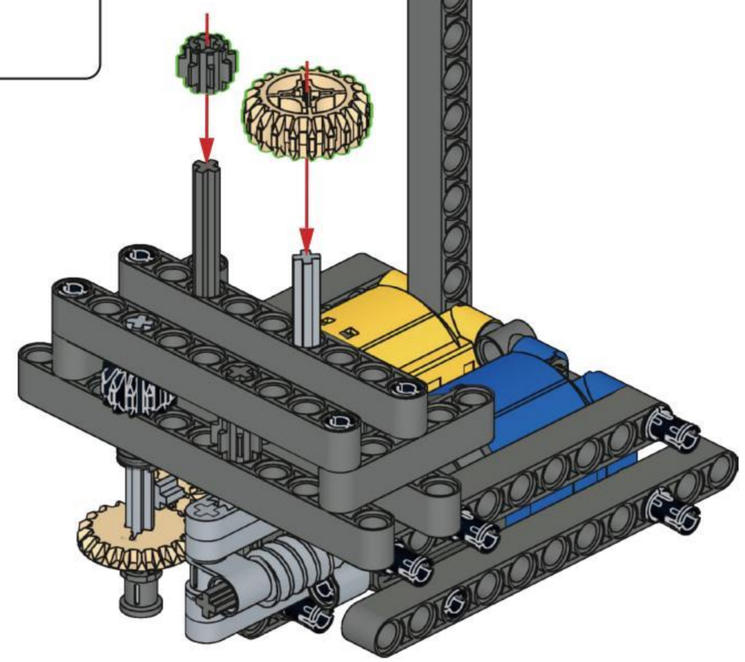

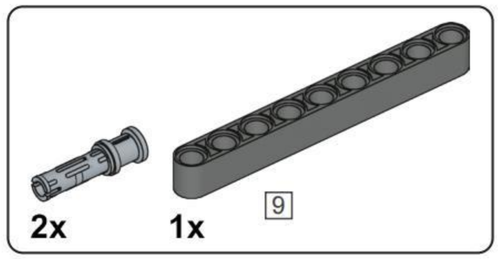


# A137

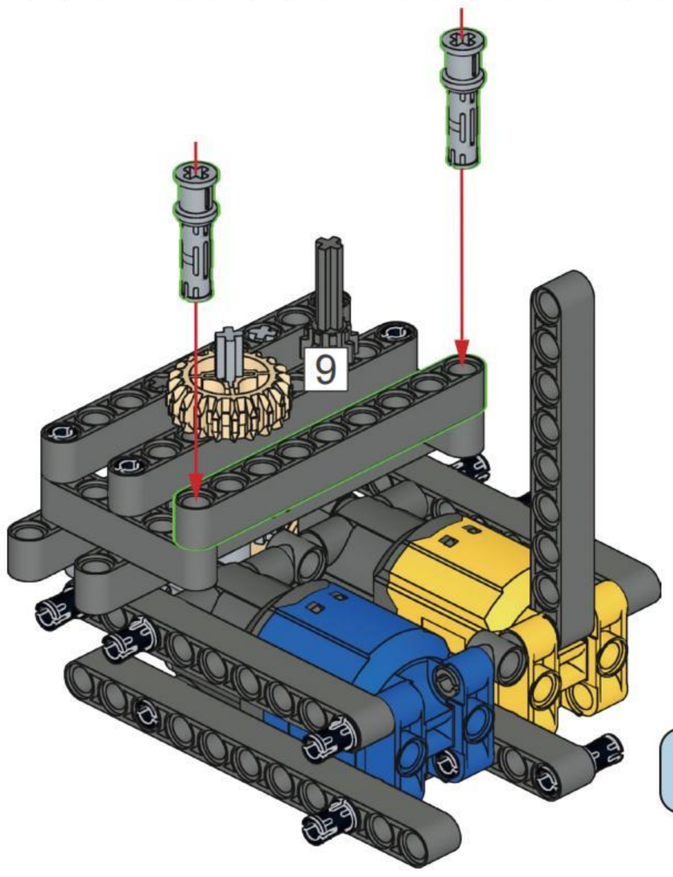


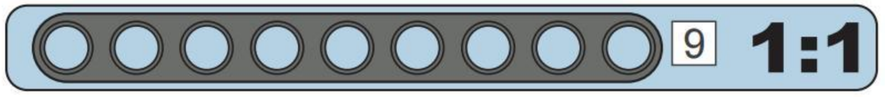

2x

# A138

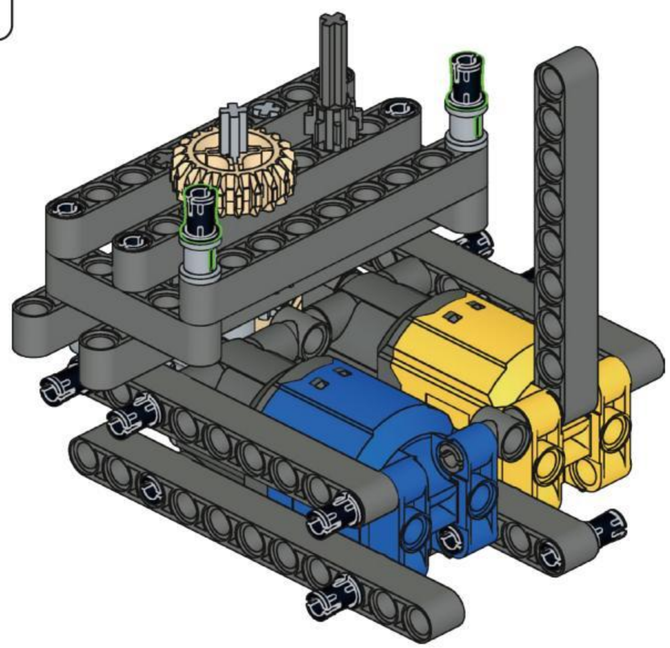

2x

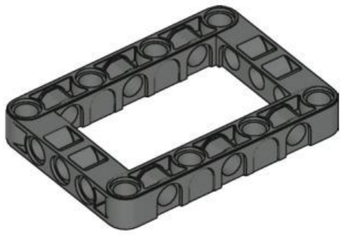

1x

# A139

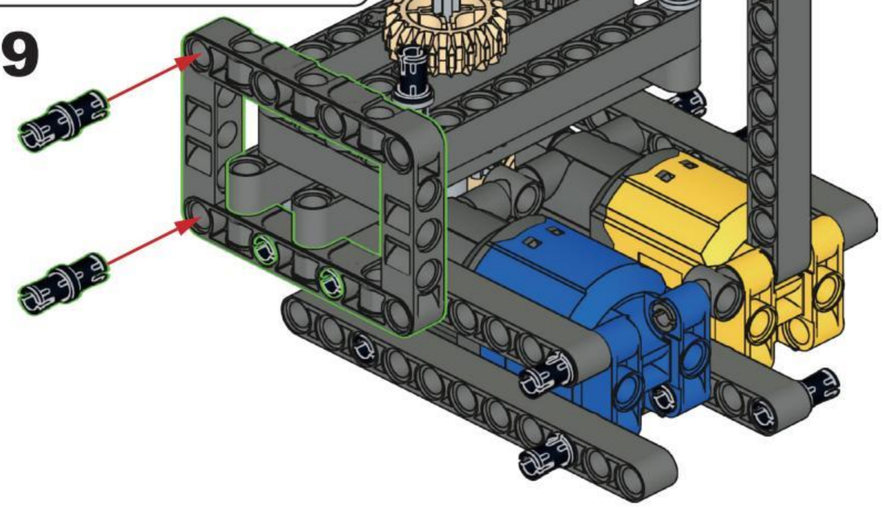

2x

# A140

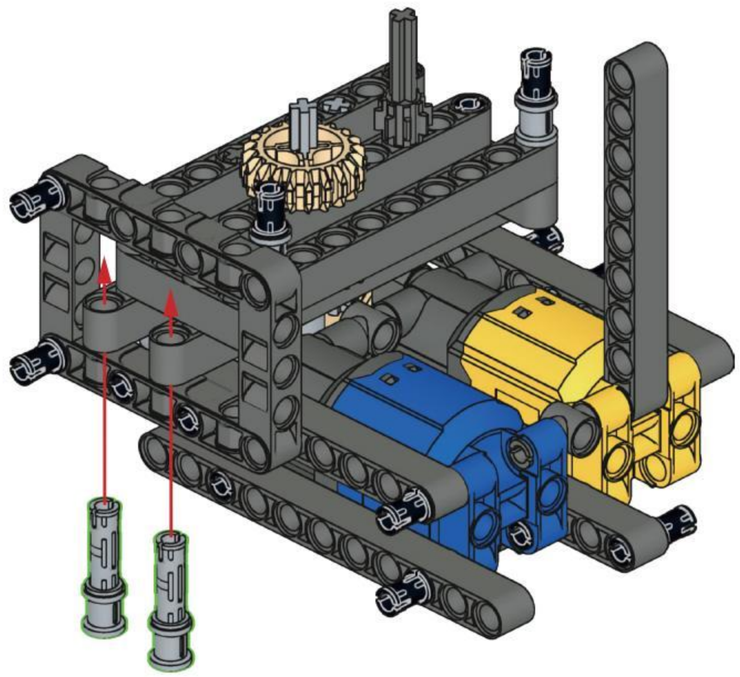

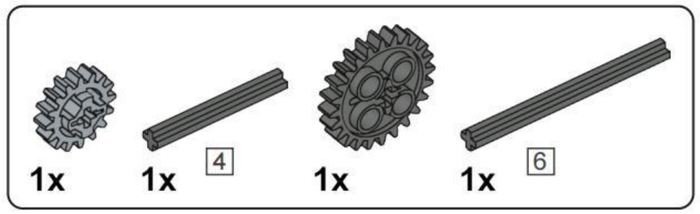


# A141

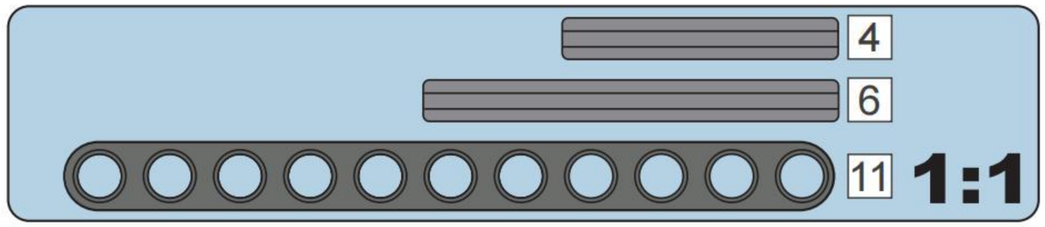


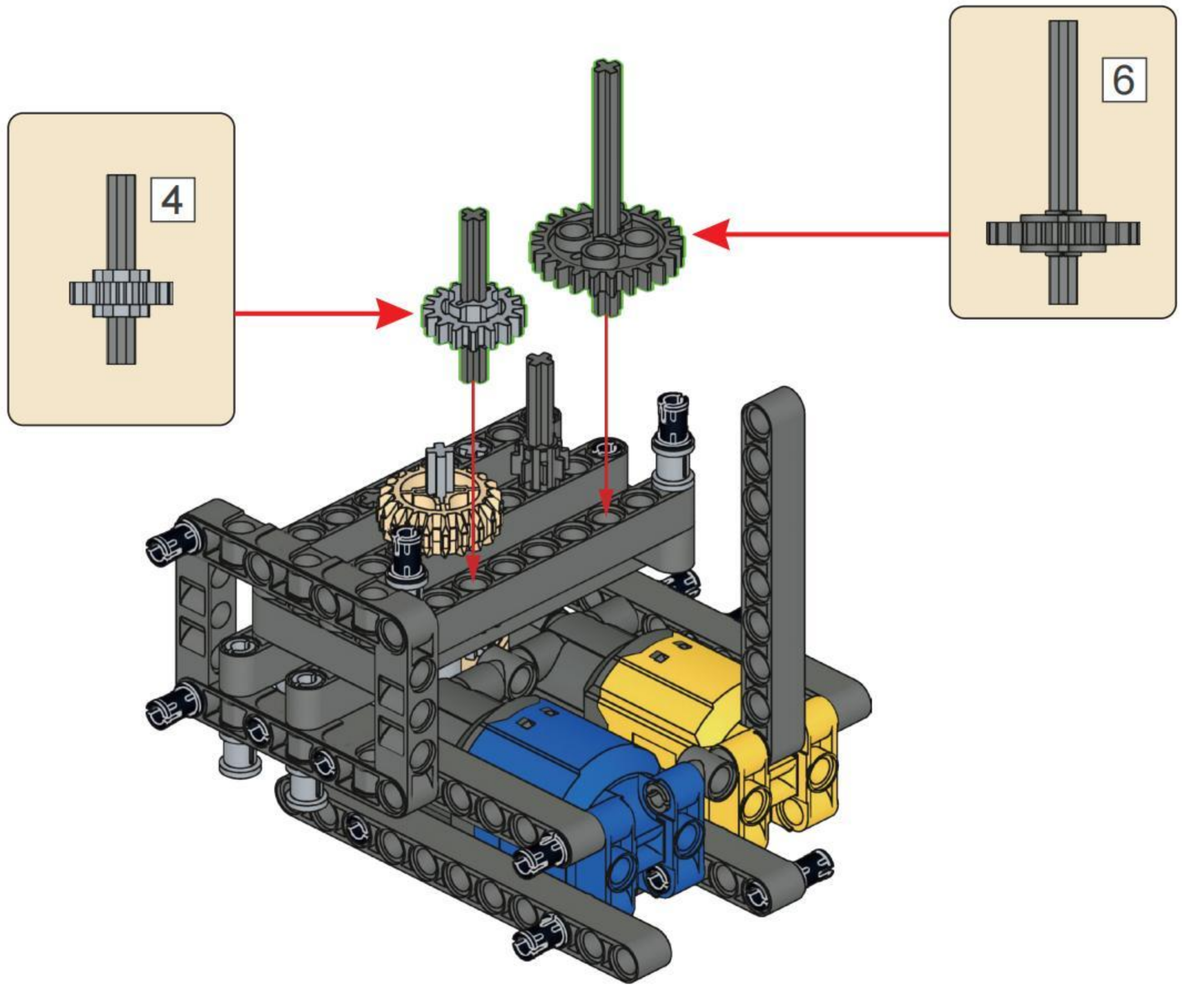


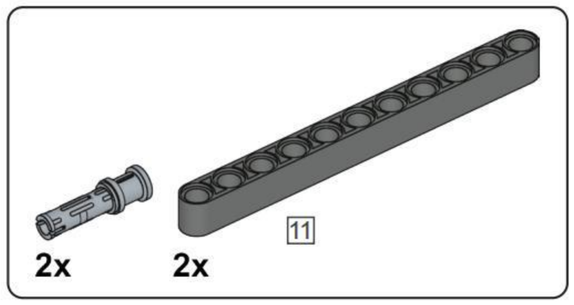


# A142

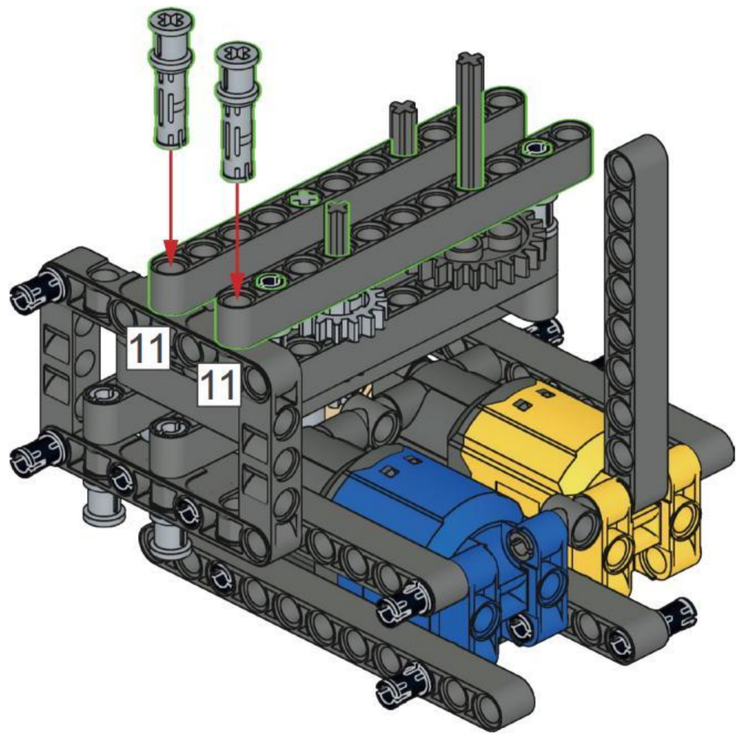

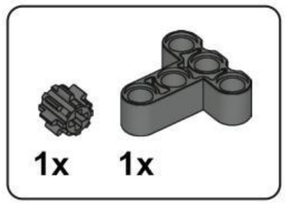


# A143

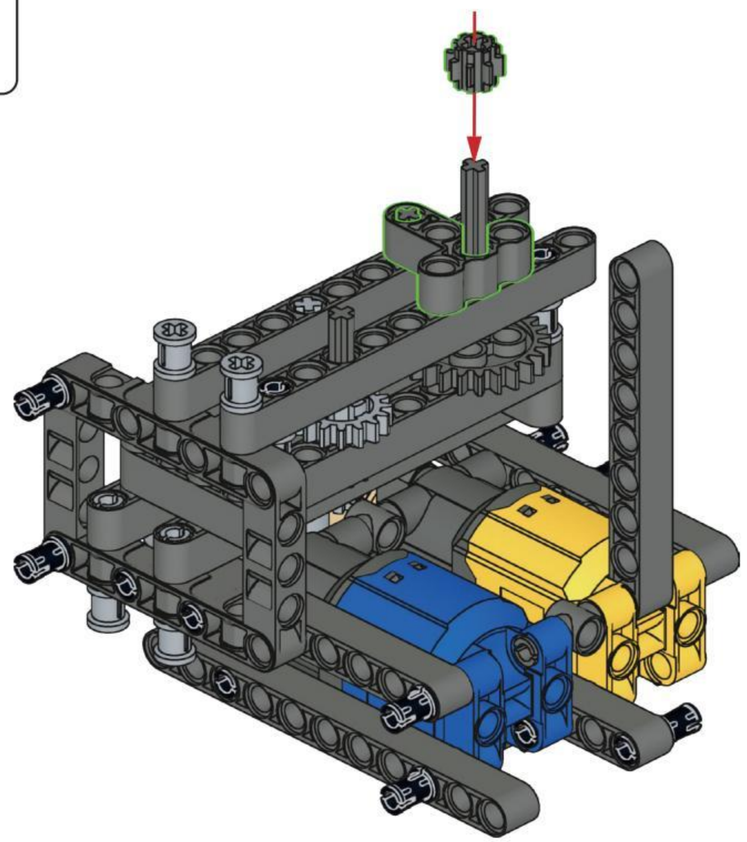

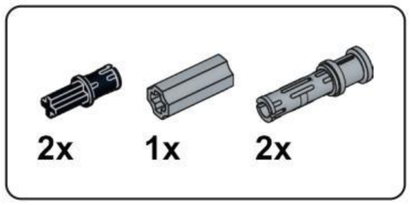


# A144

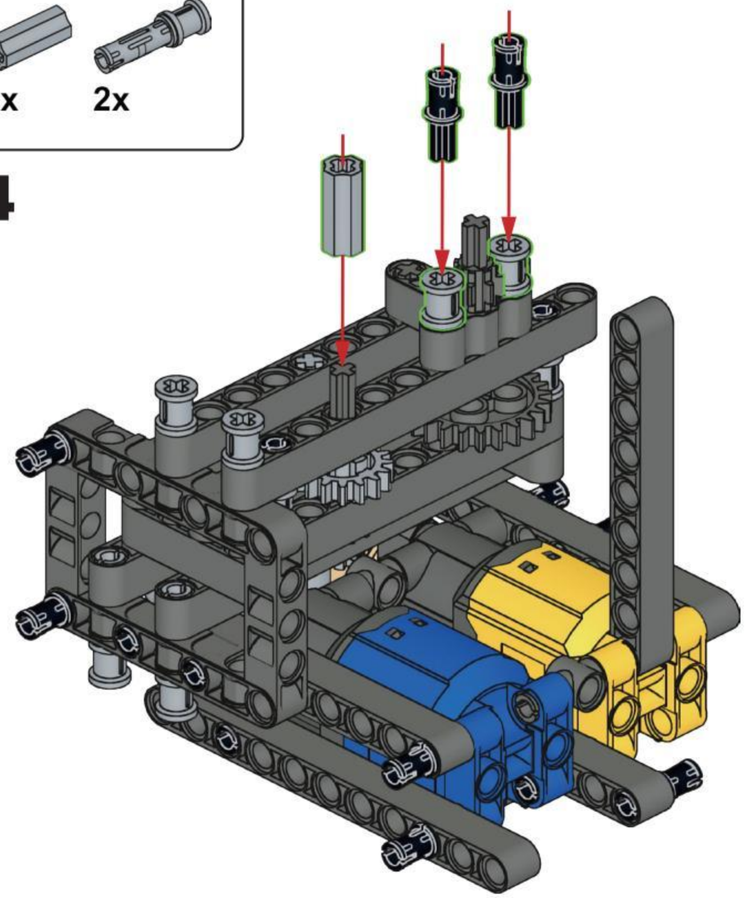

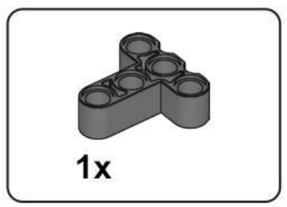


# A145

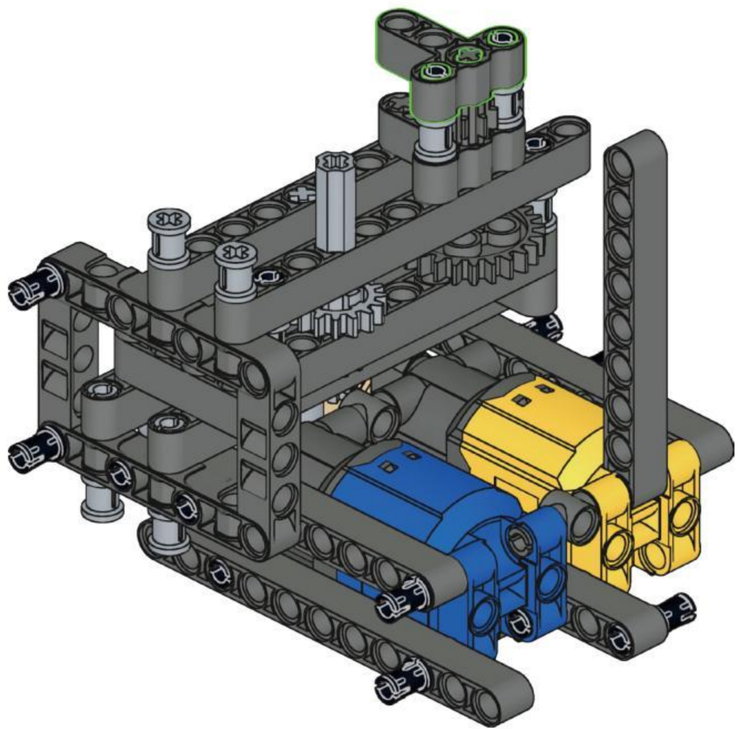

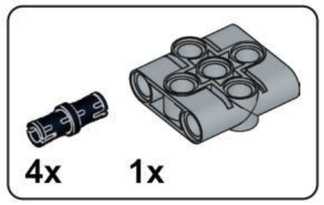


# A146

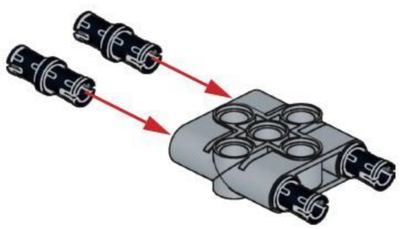

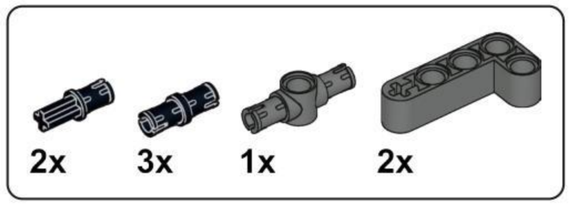


# A147

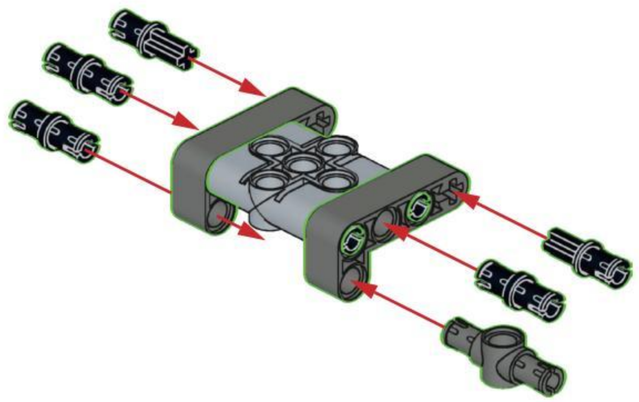

# A148

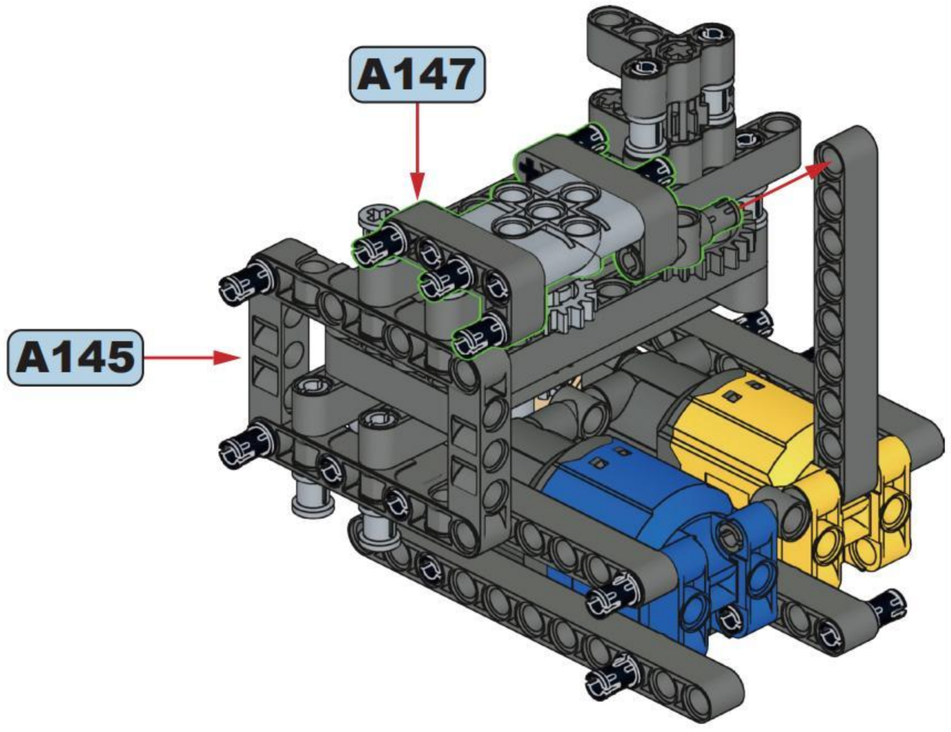

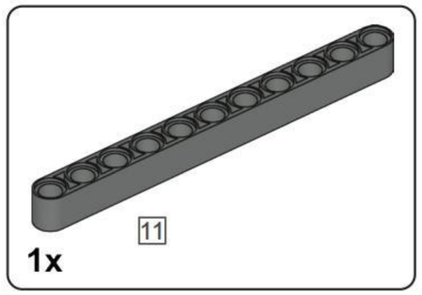


# A149

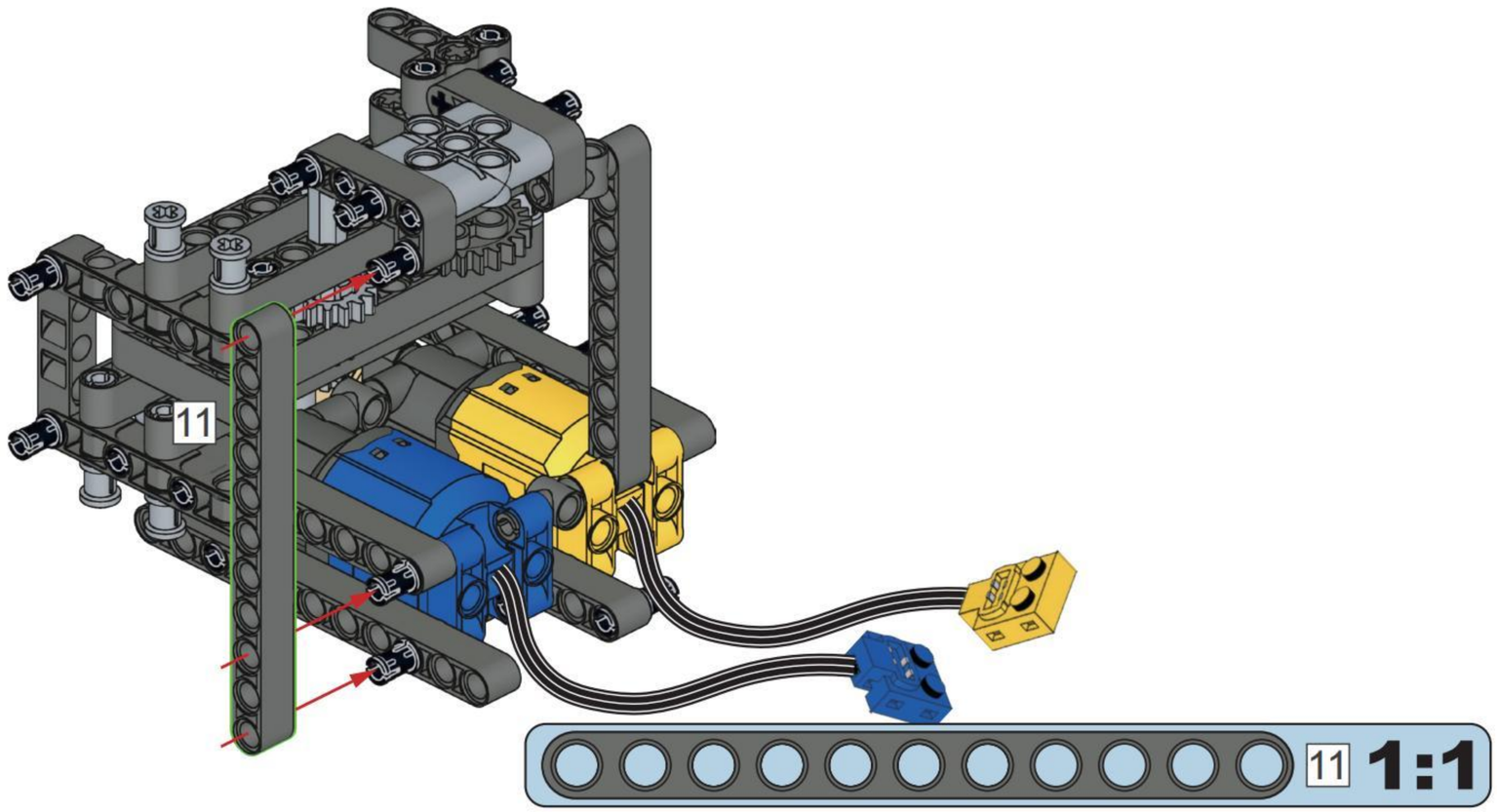


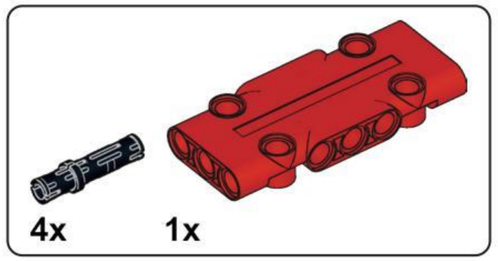


# A150

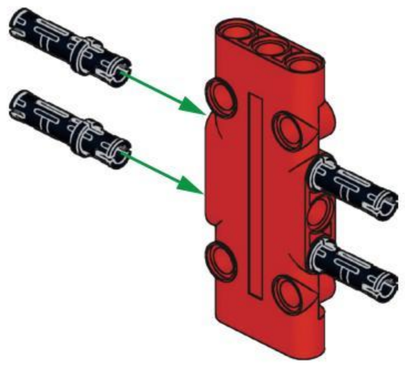

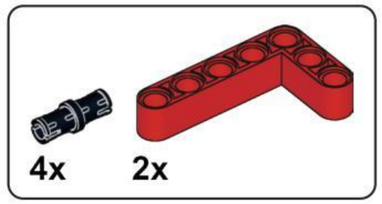


# A151

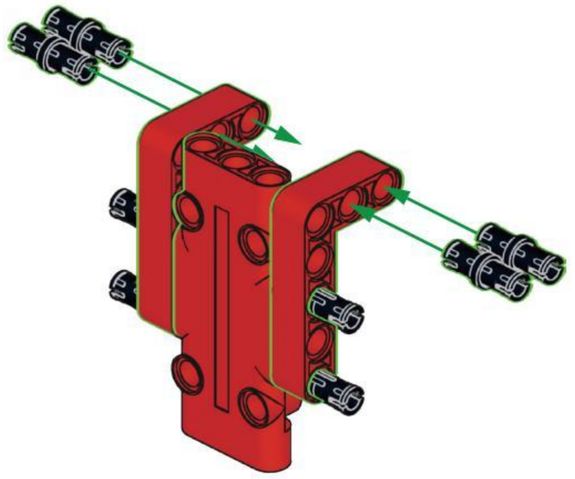

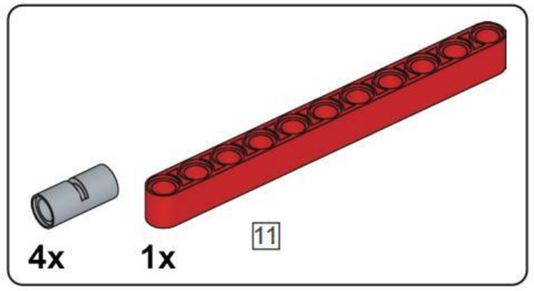


## A152

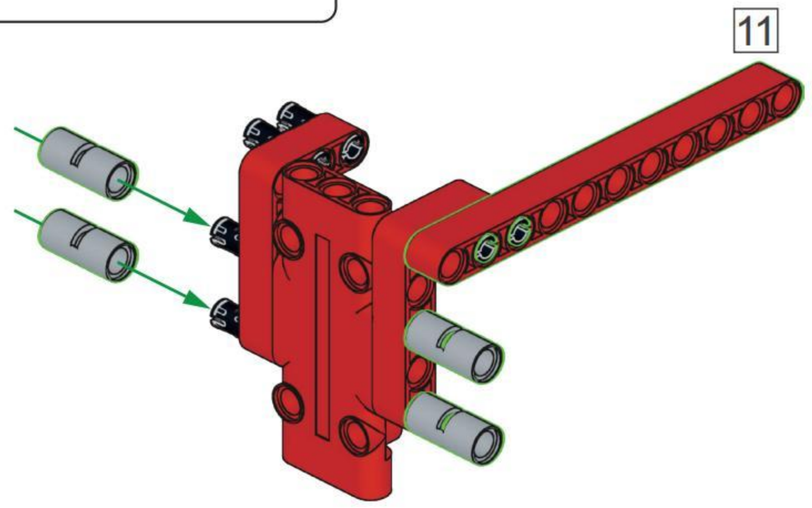


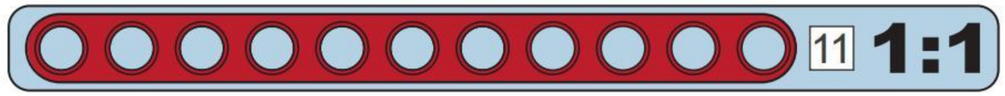


## A153

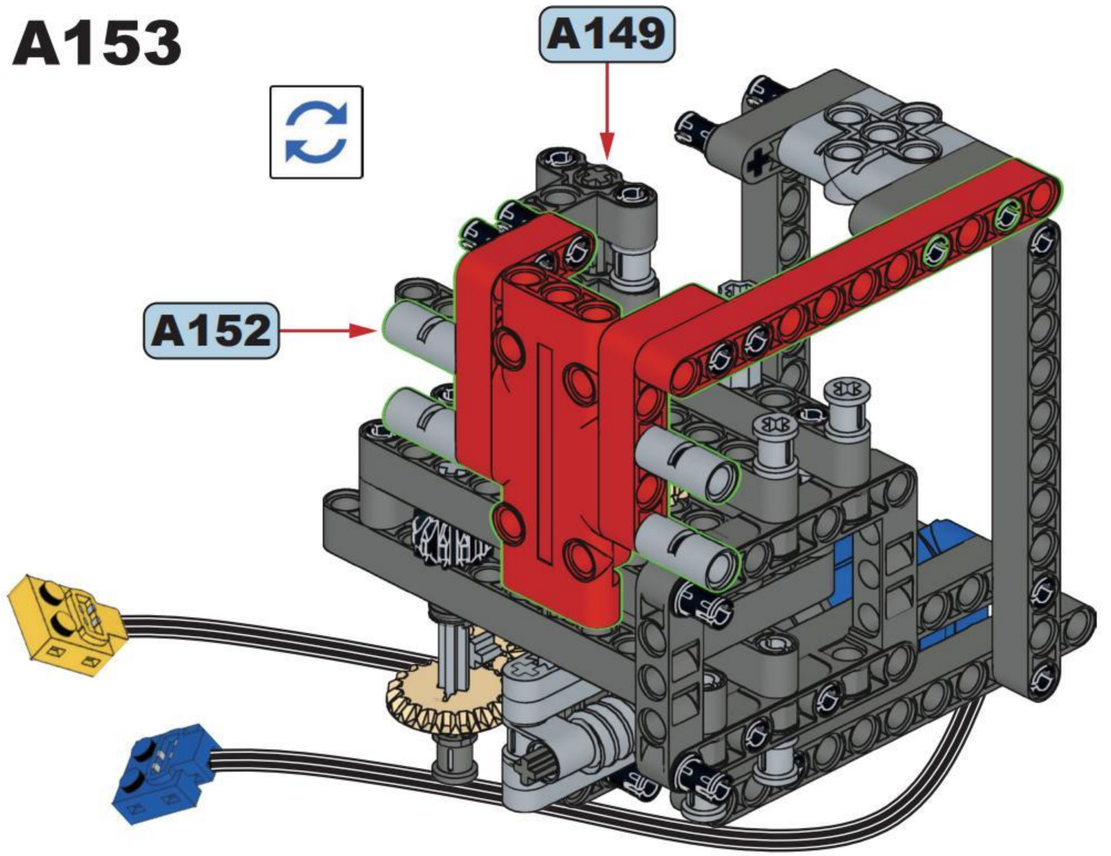


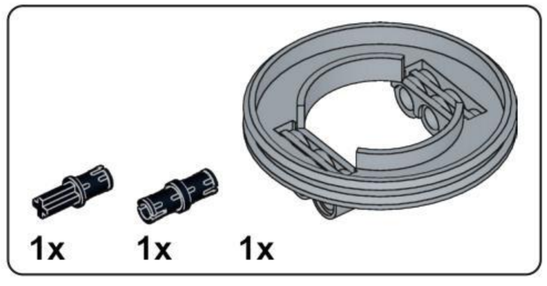


## A154

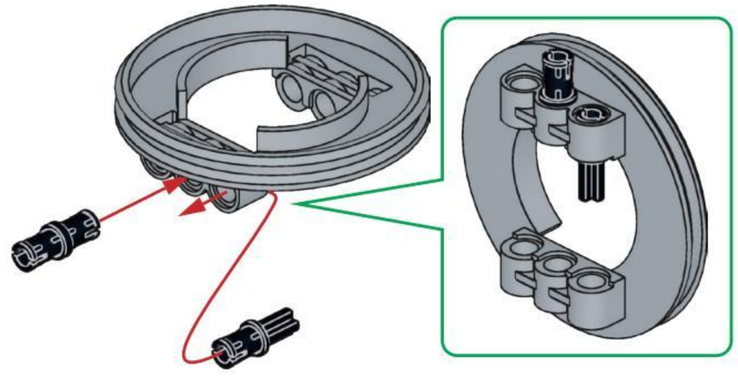

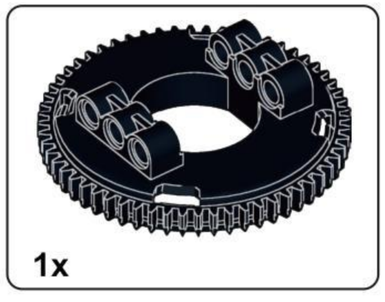


## A155

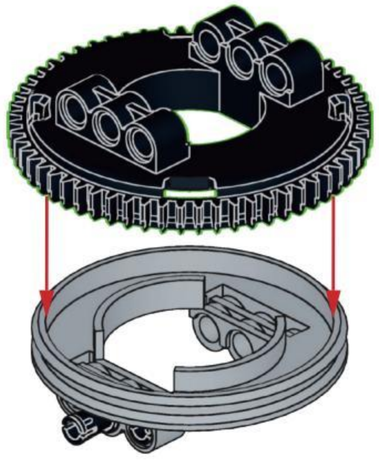

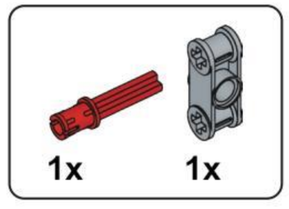


## A156

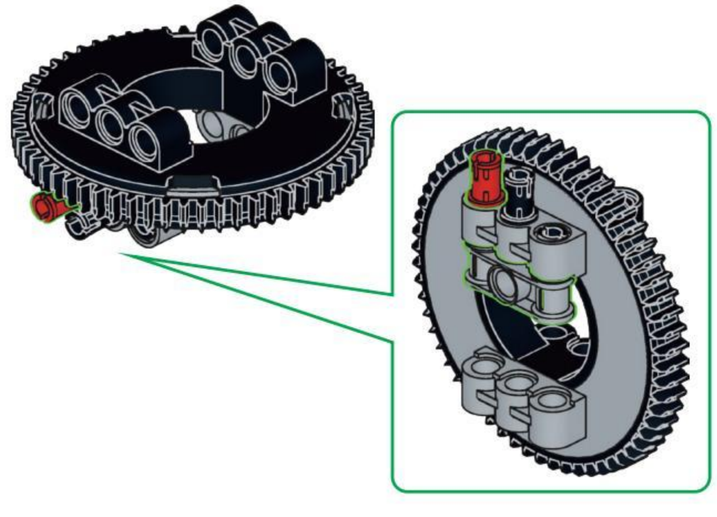

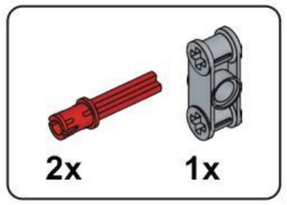


## A157

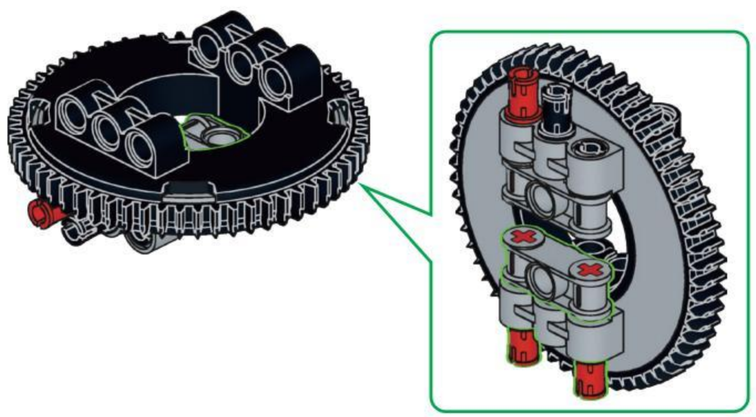

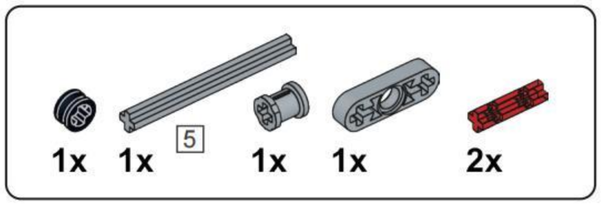


## A158

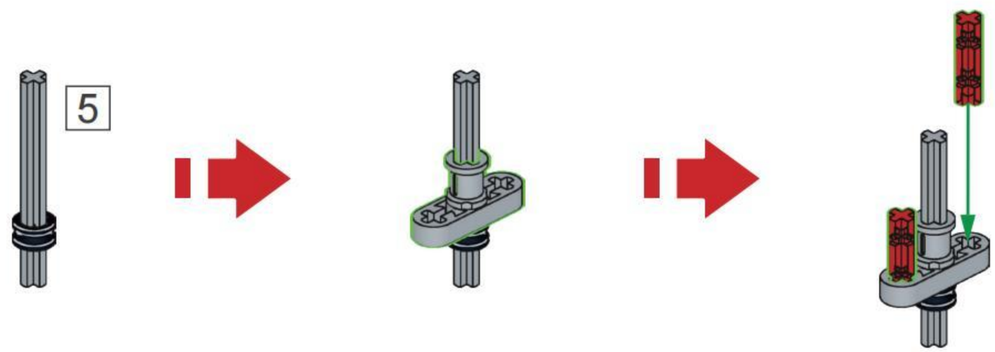


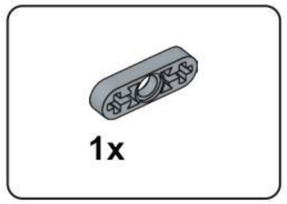


## A159

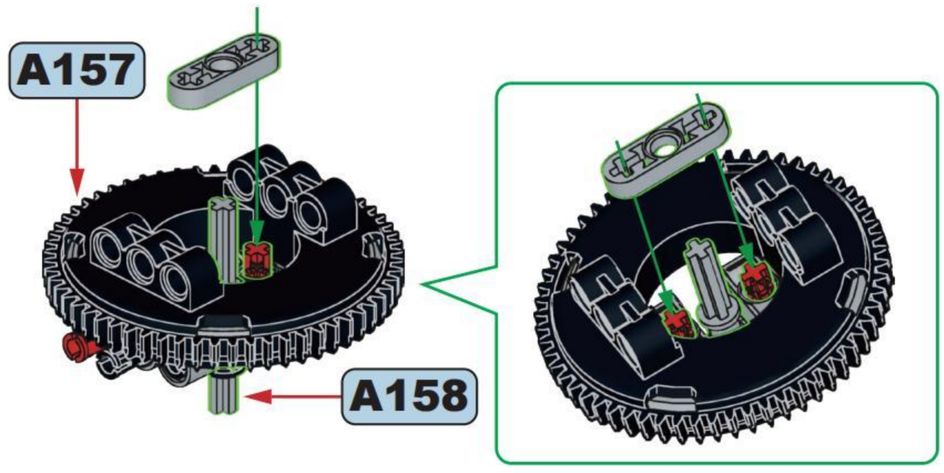


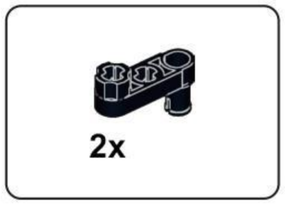


## A160

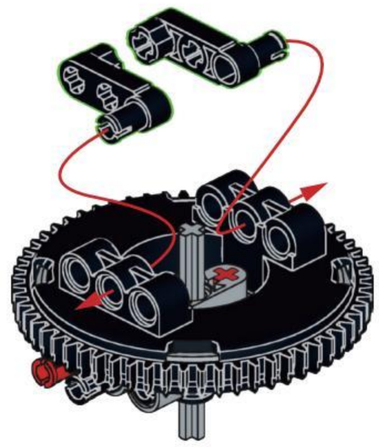

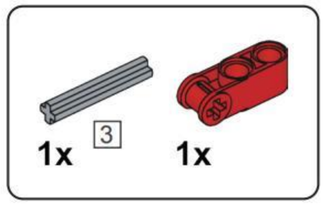


## A161

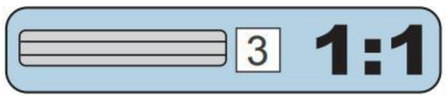


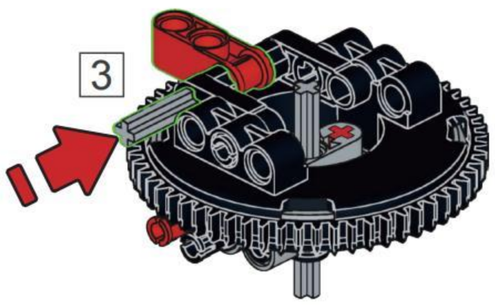


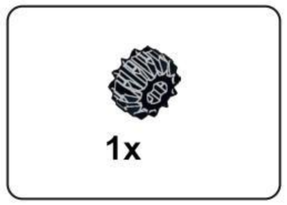


## A162

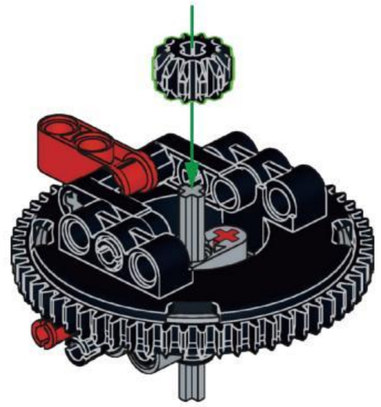

## A163

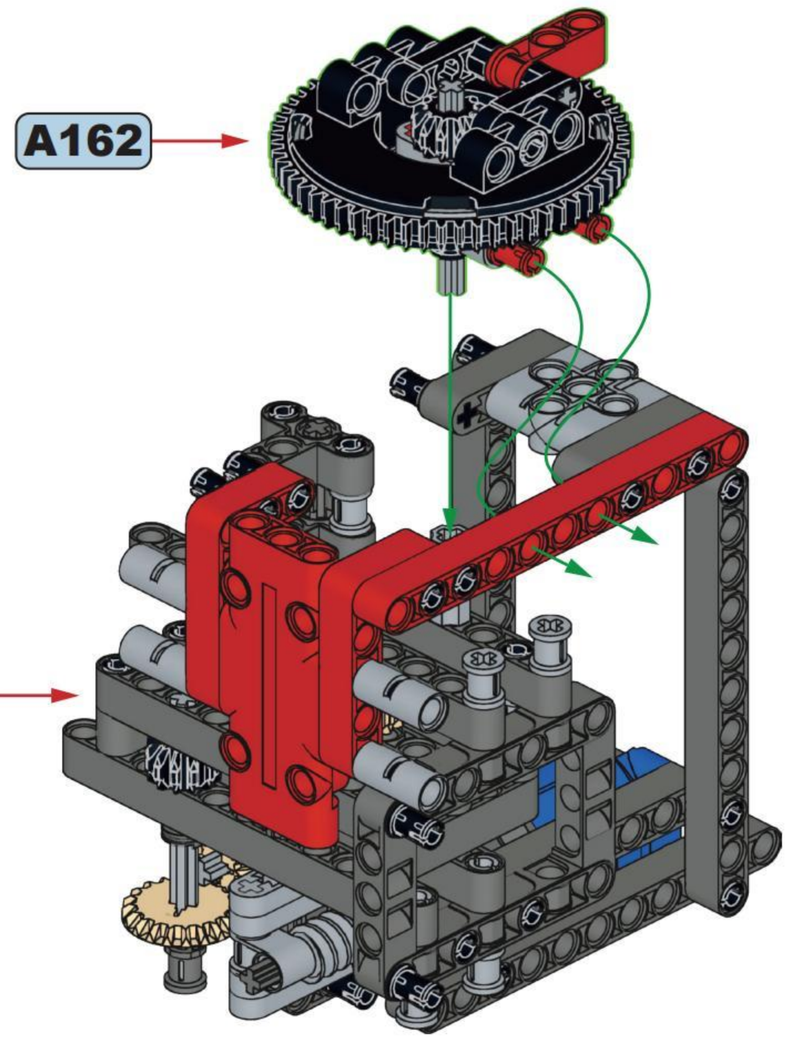

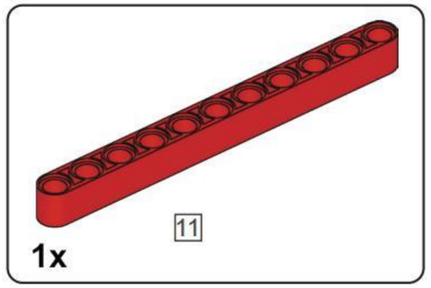


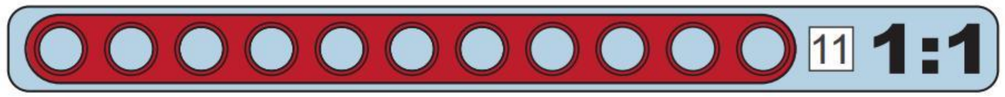


# A164

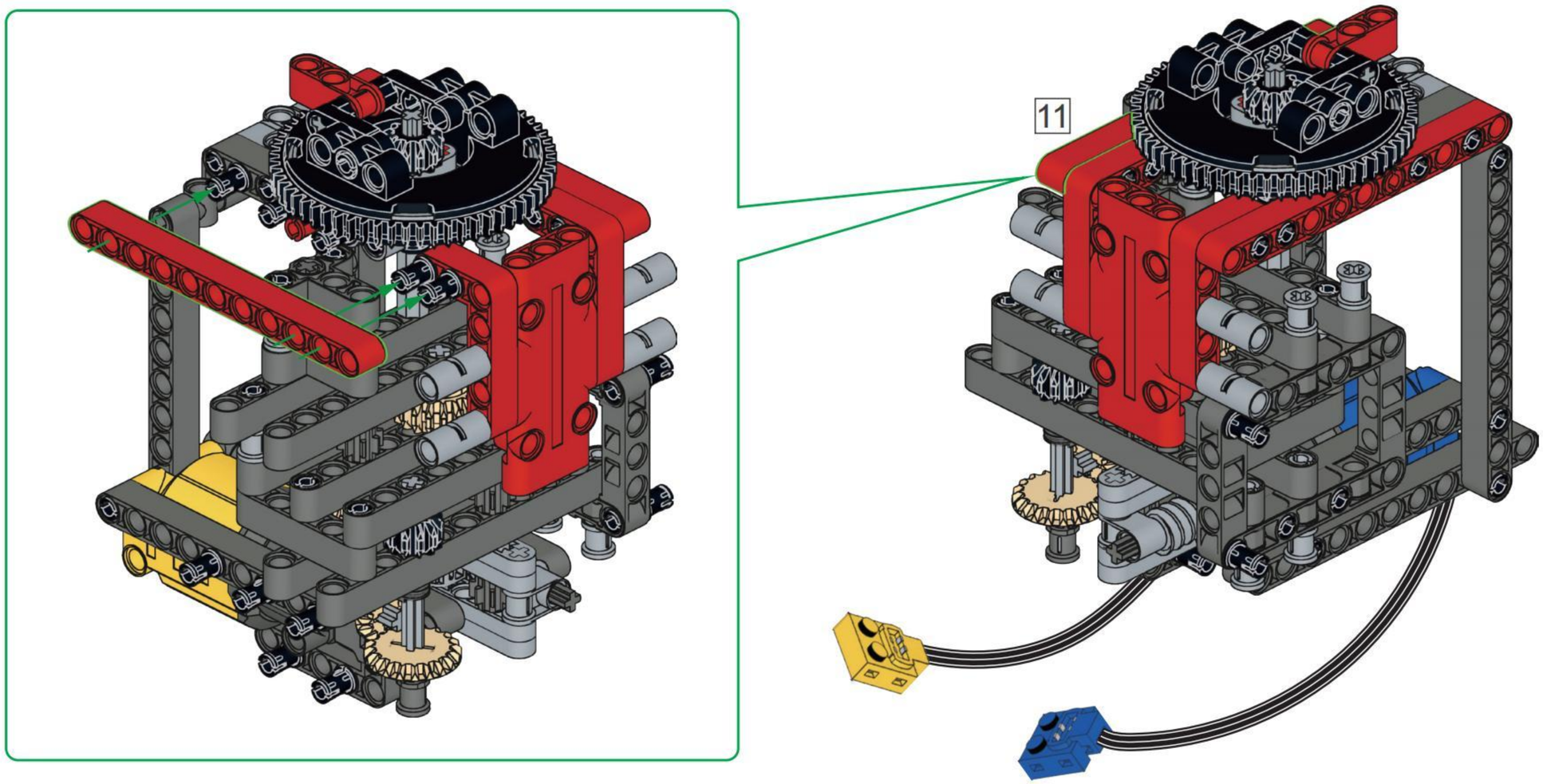

# A165

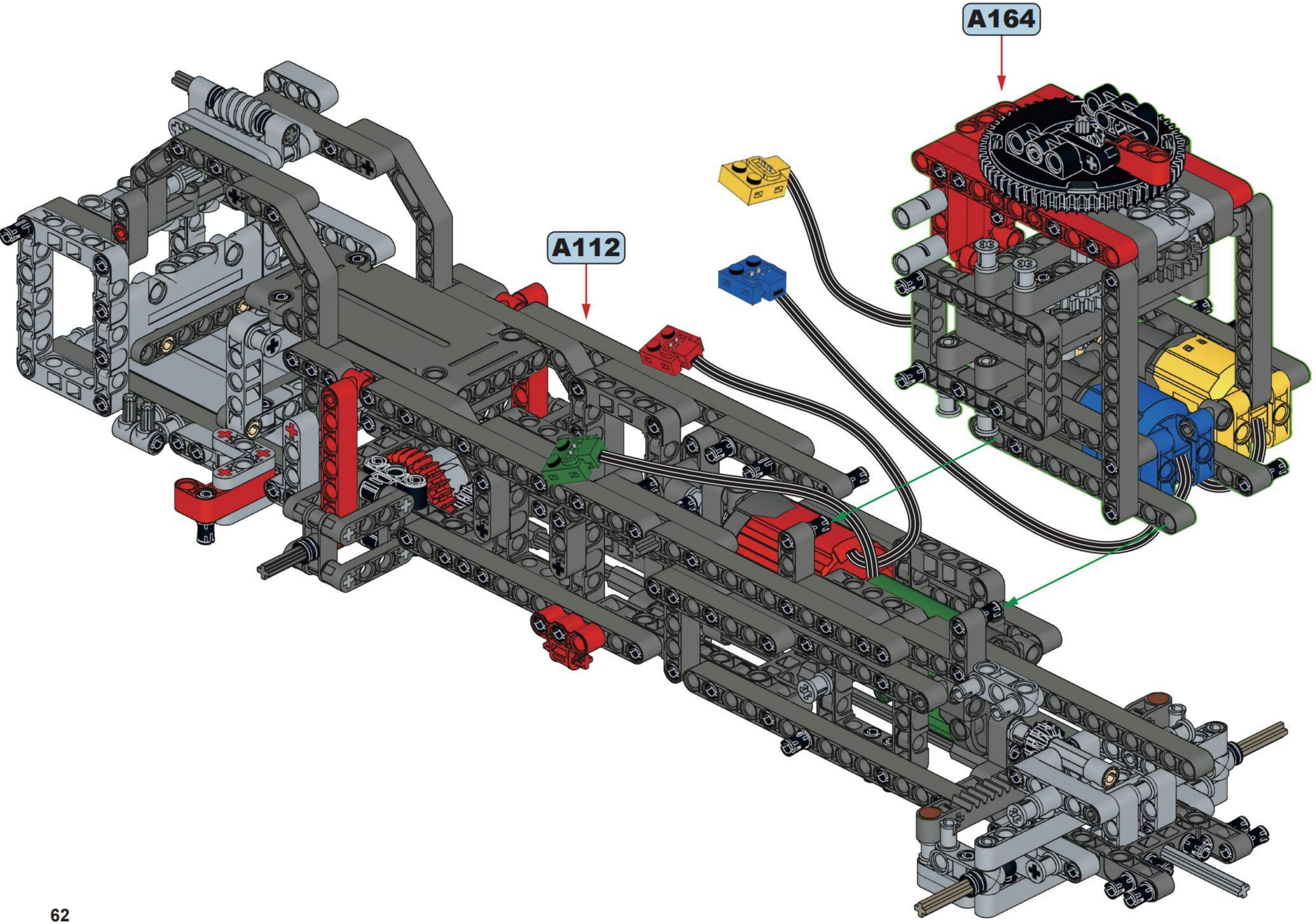

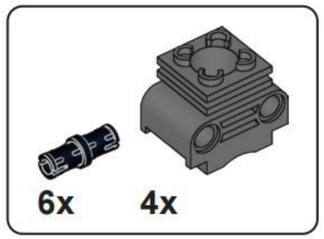


## A166

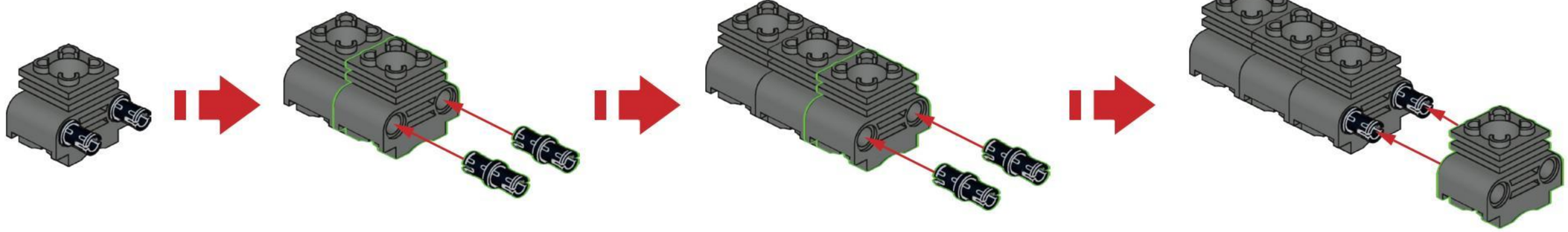

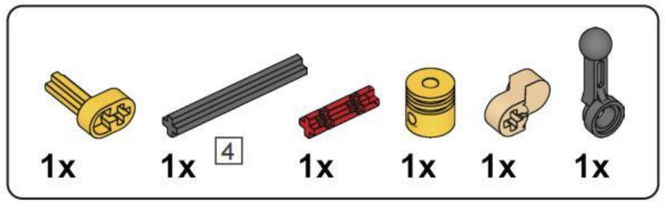


## A167

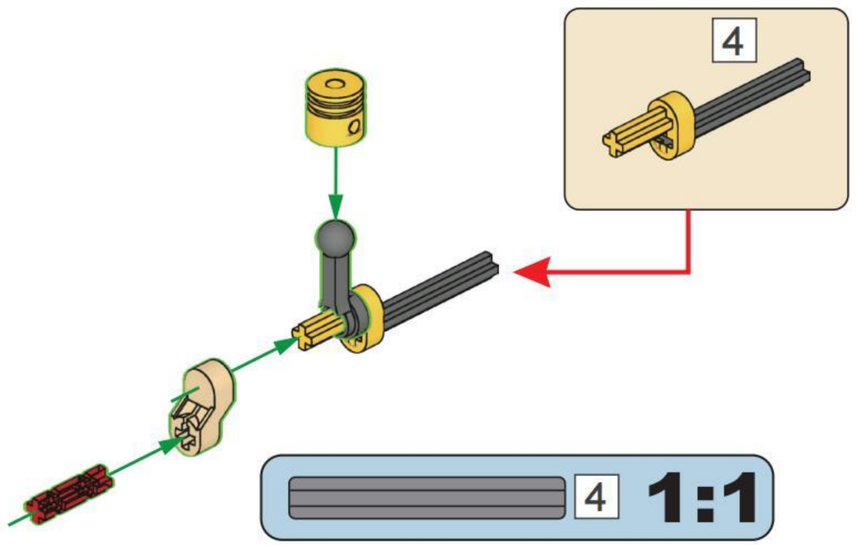


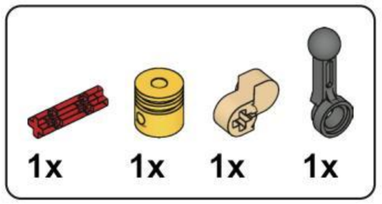


## A168

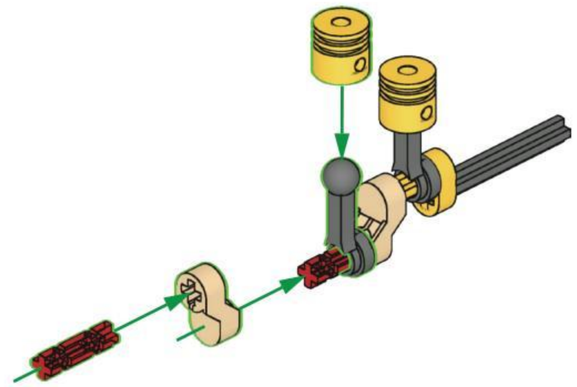

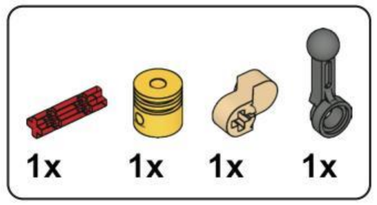


## A169

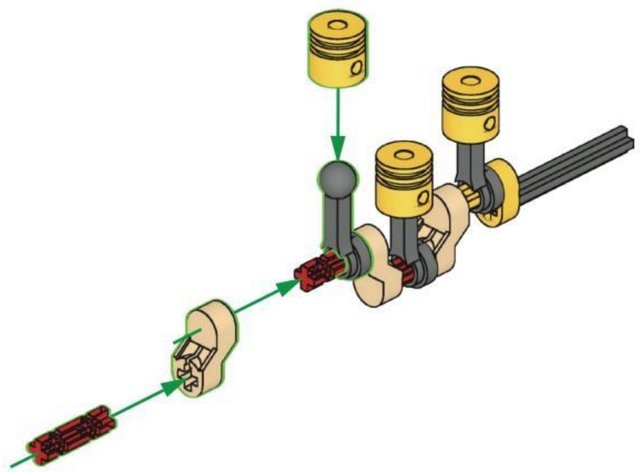

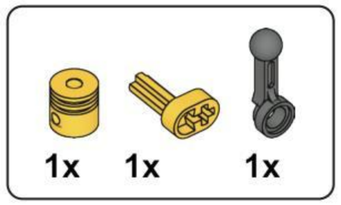


## A170

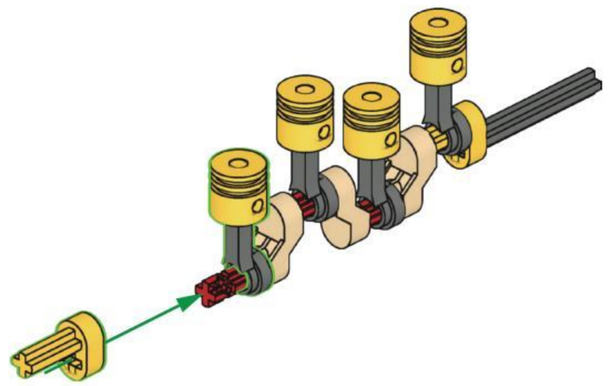

## A171

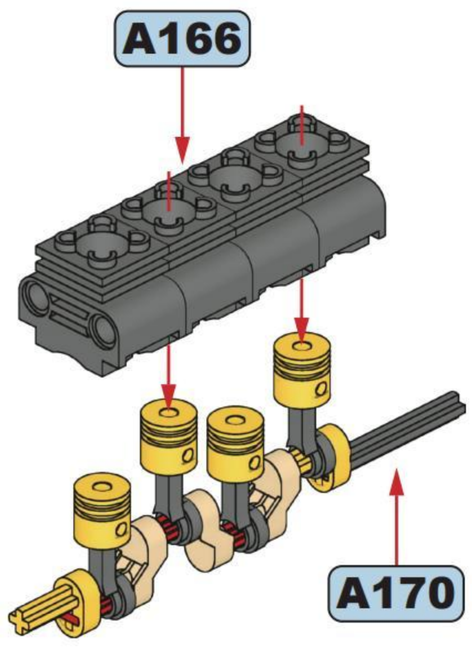


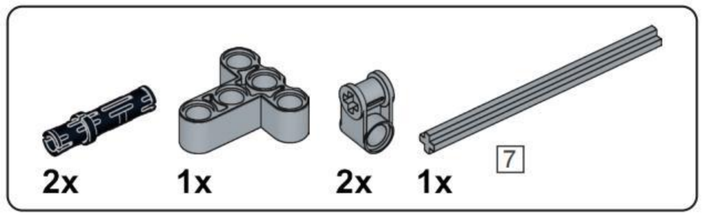


## A172

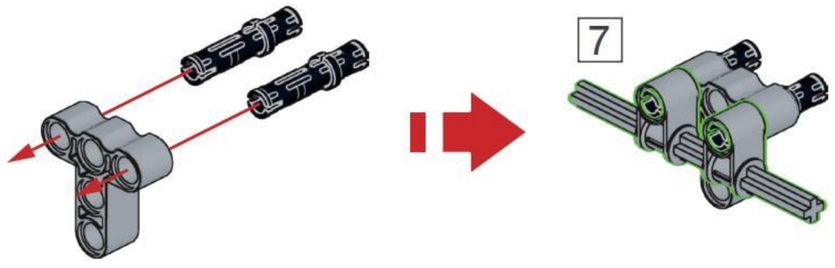

## A173

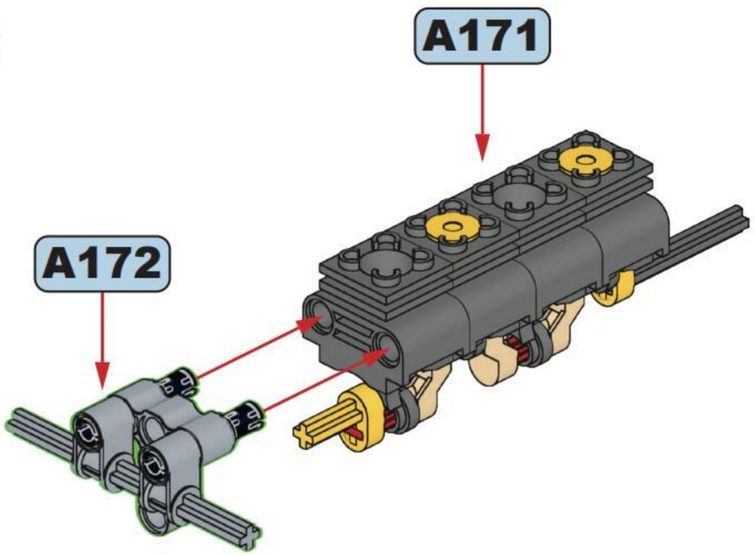


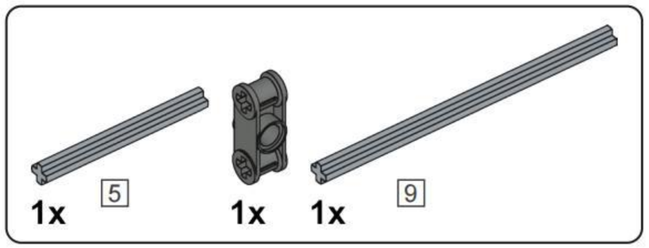


## A174

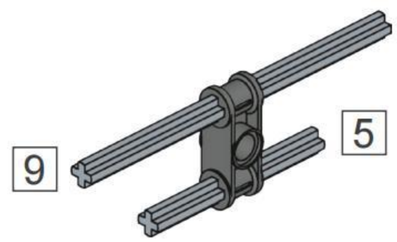

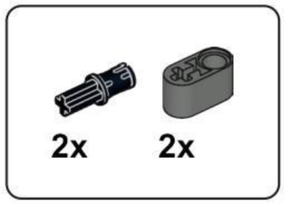


## A175

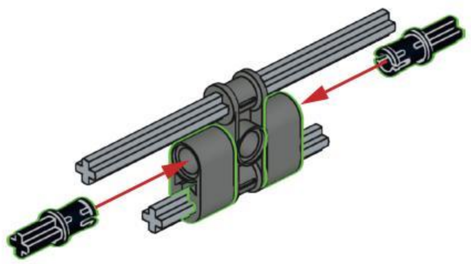

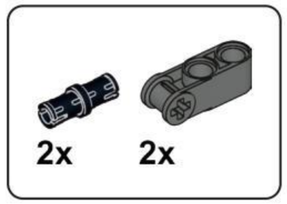


## A176

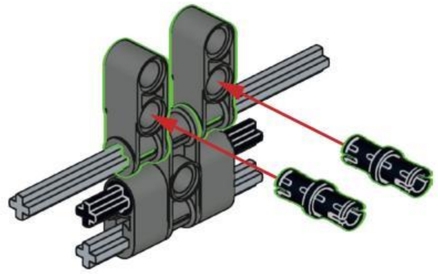

## A177

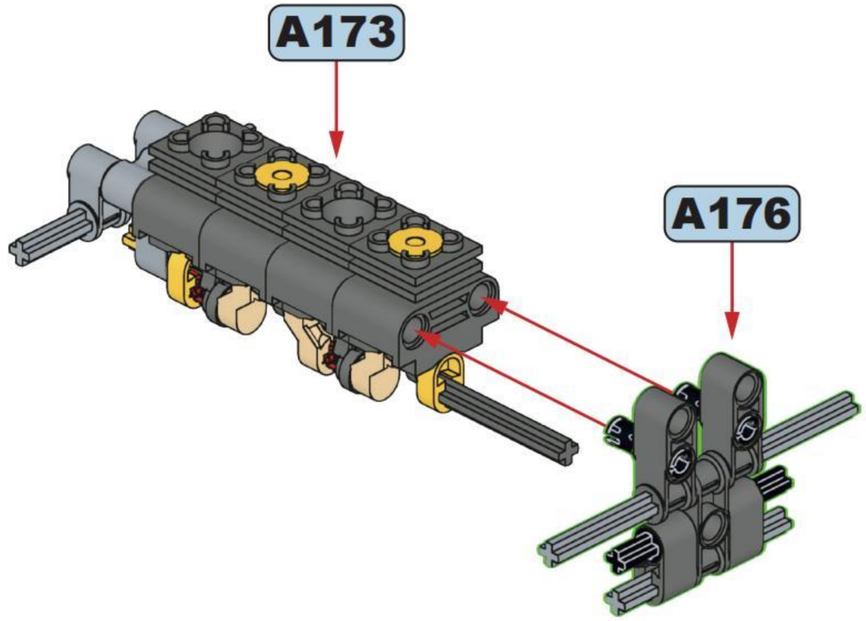

# A178

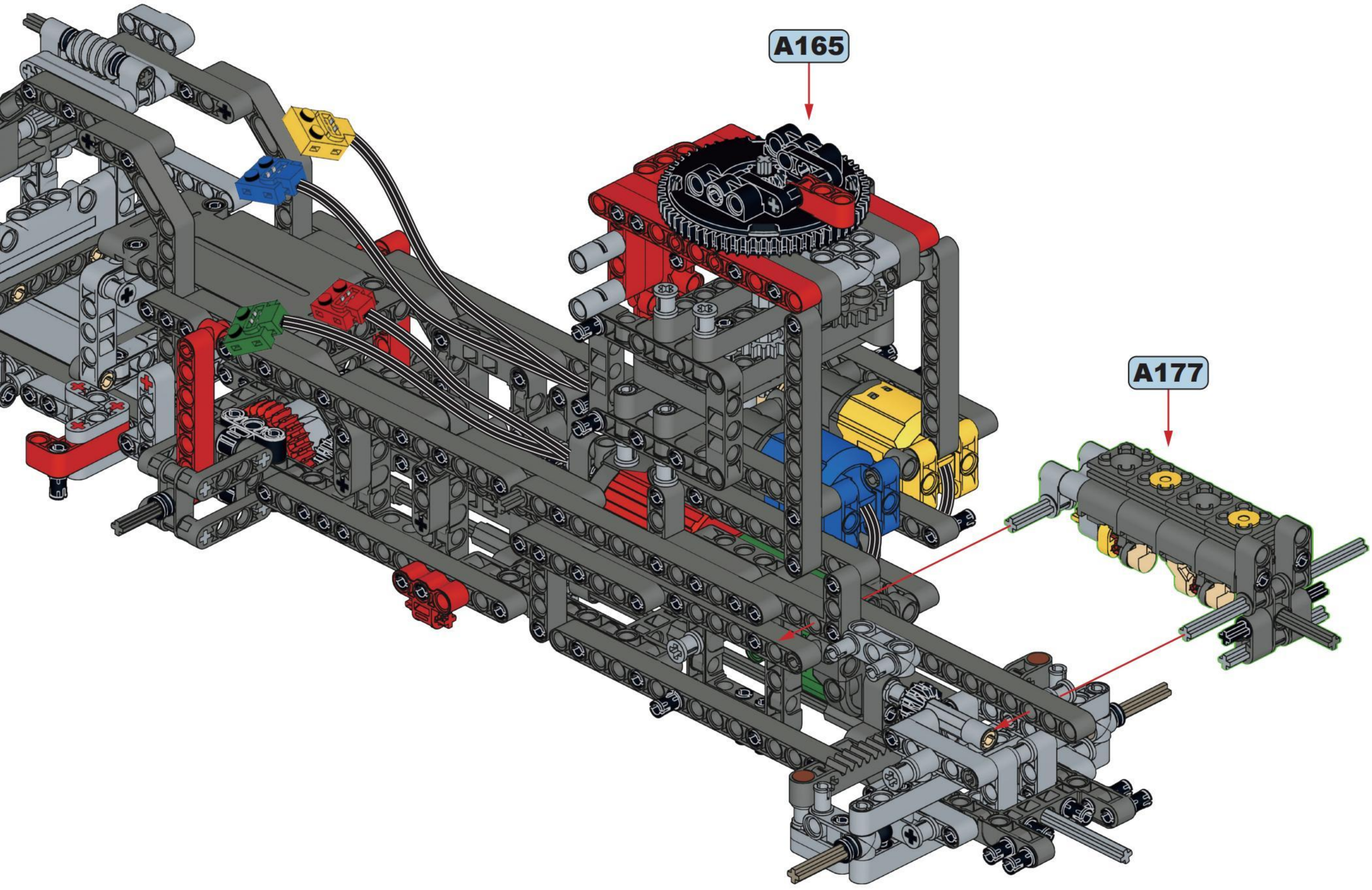

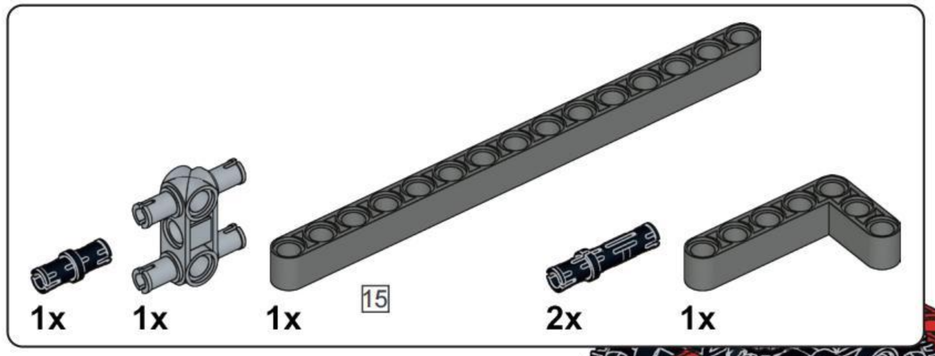


# A179

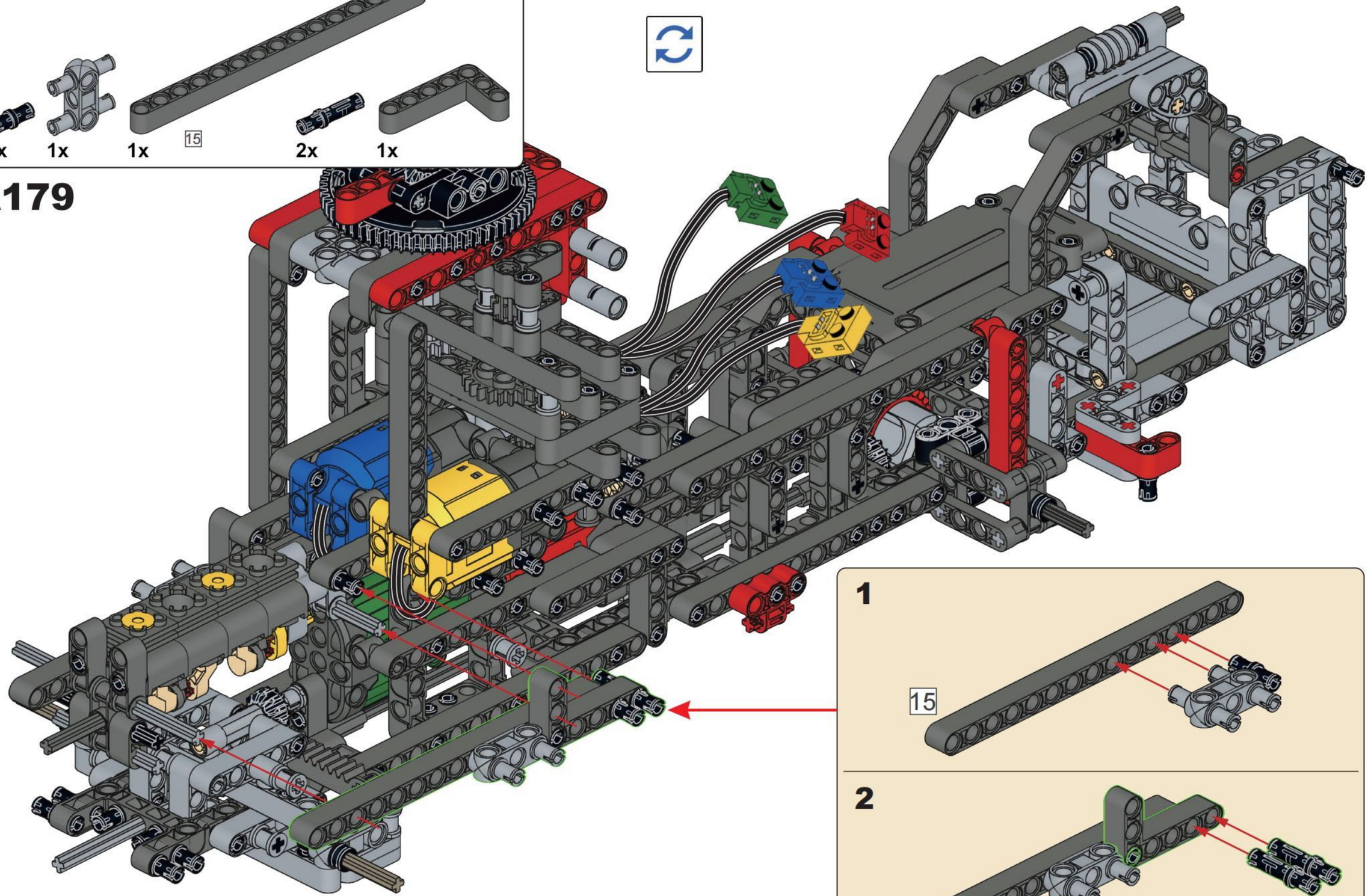

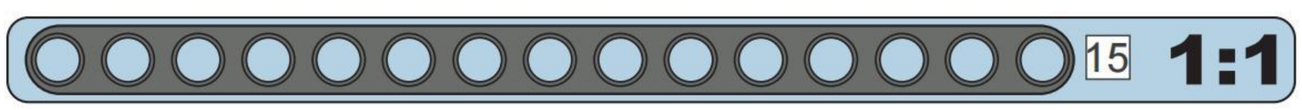


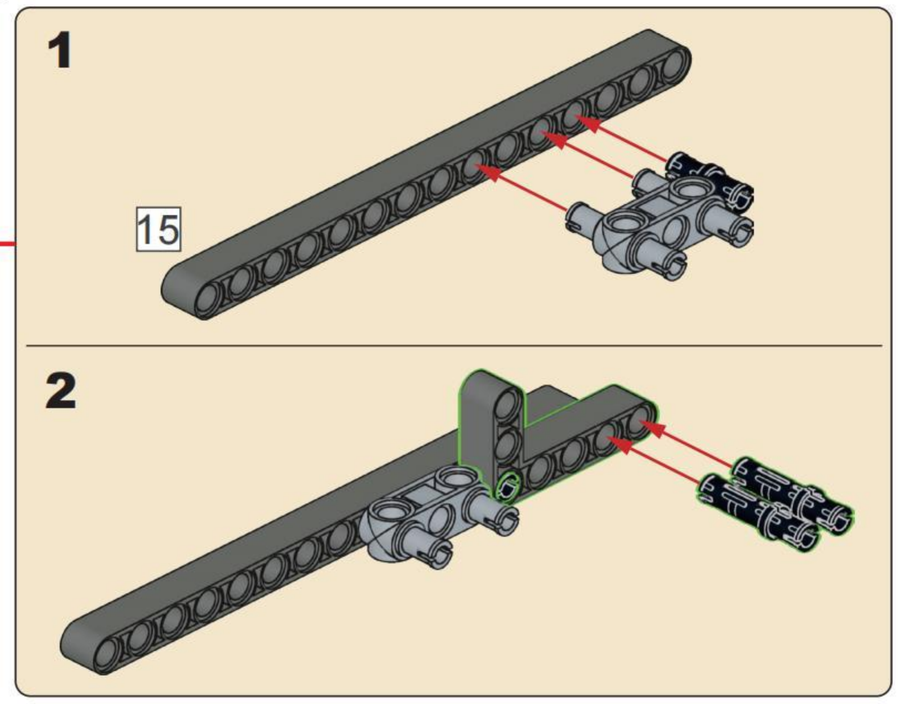

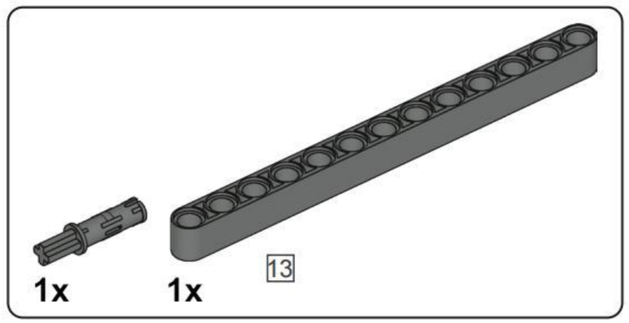


# A180

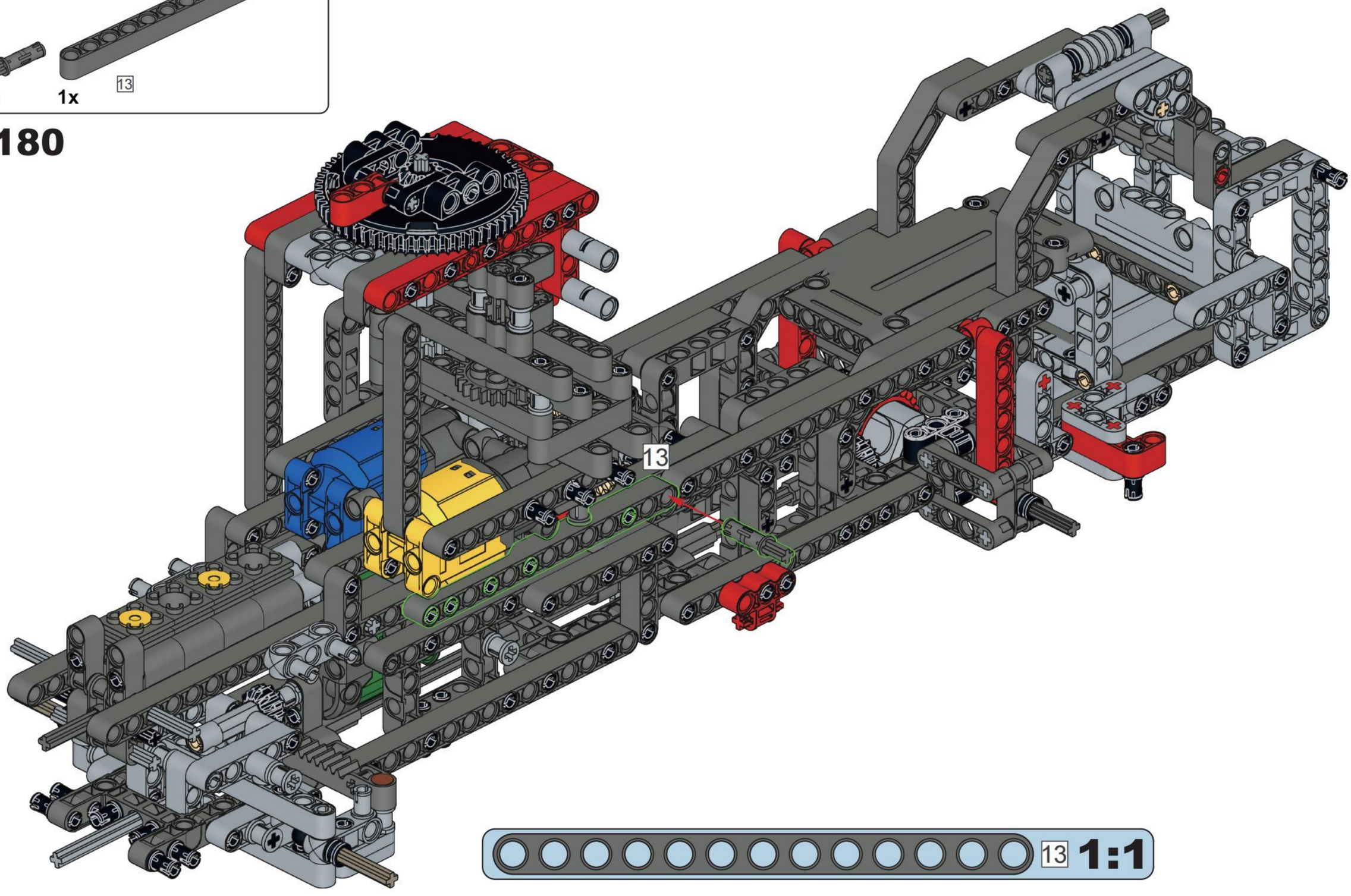

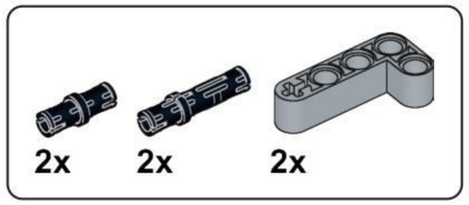


# A181

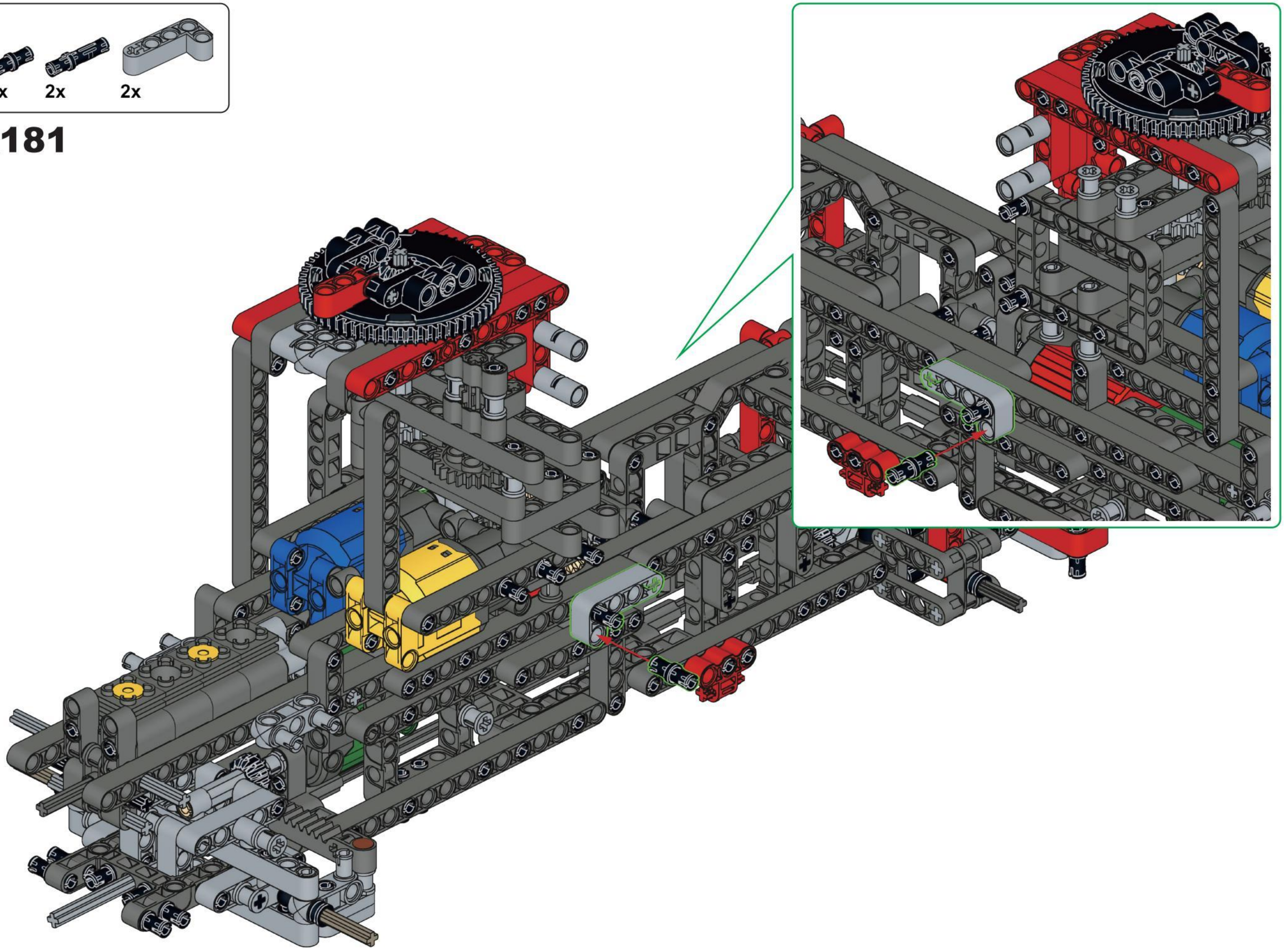

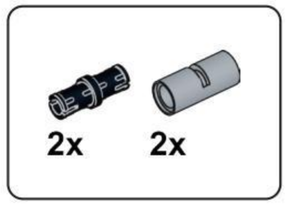


# A182

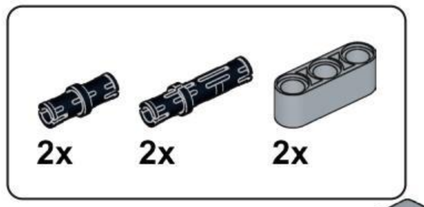


# A183

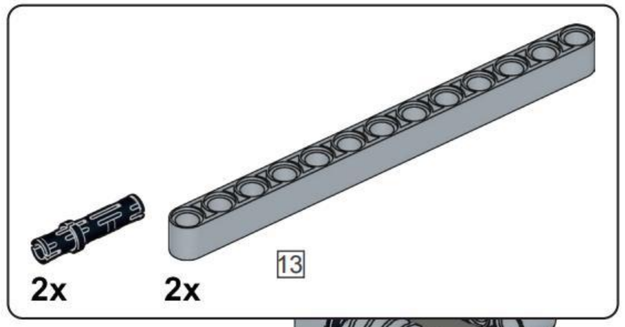


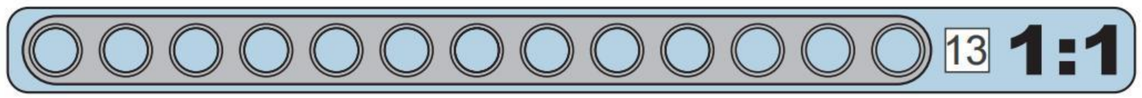


# A184

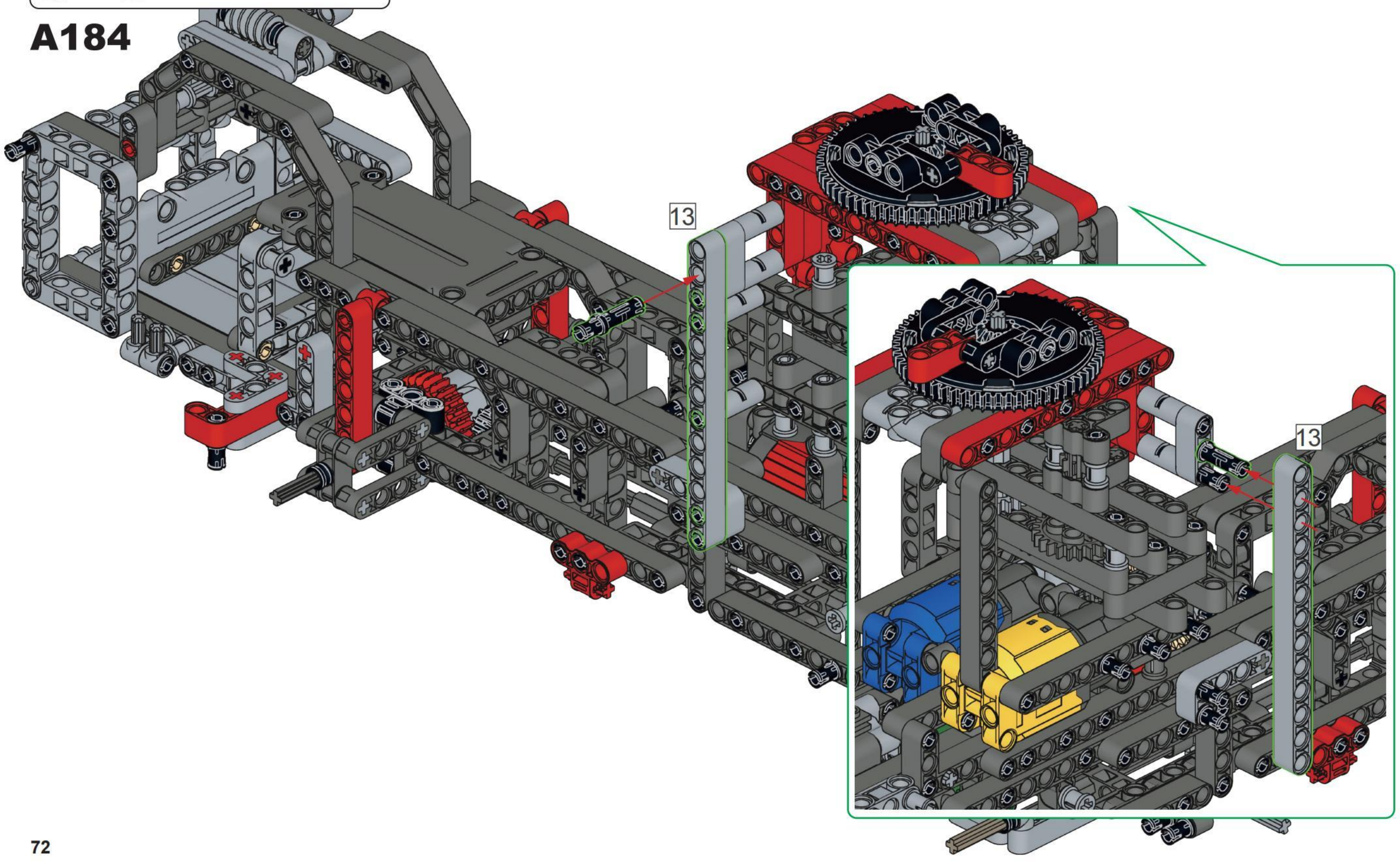

2x 1x

# A185

2x 2x

# A186

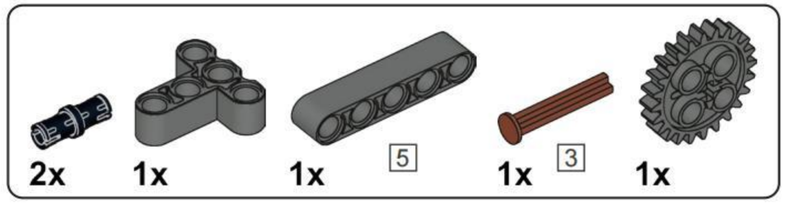


# A187

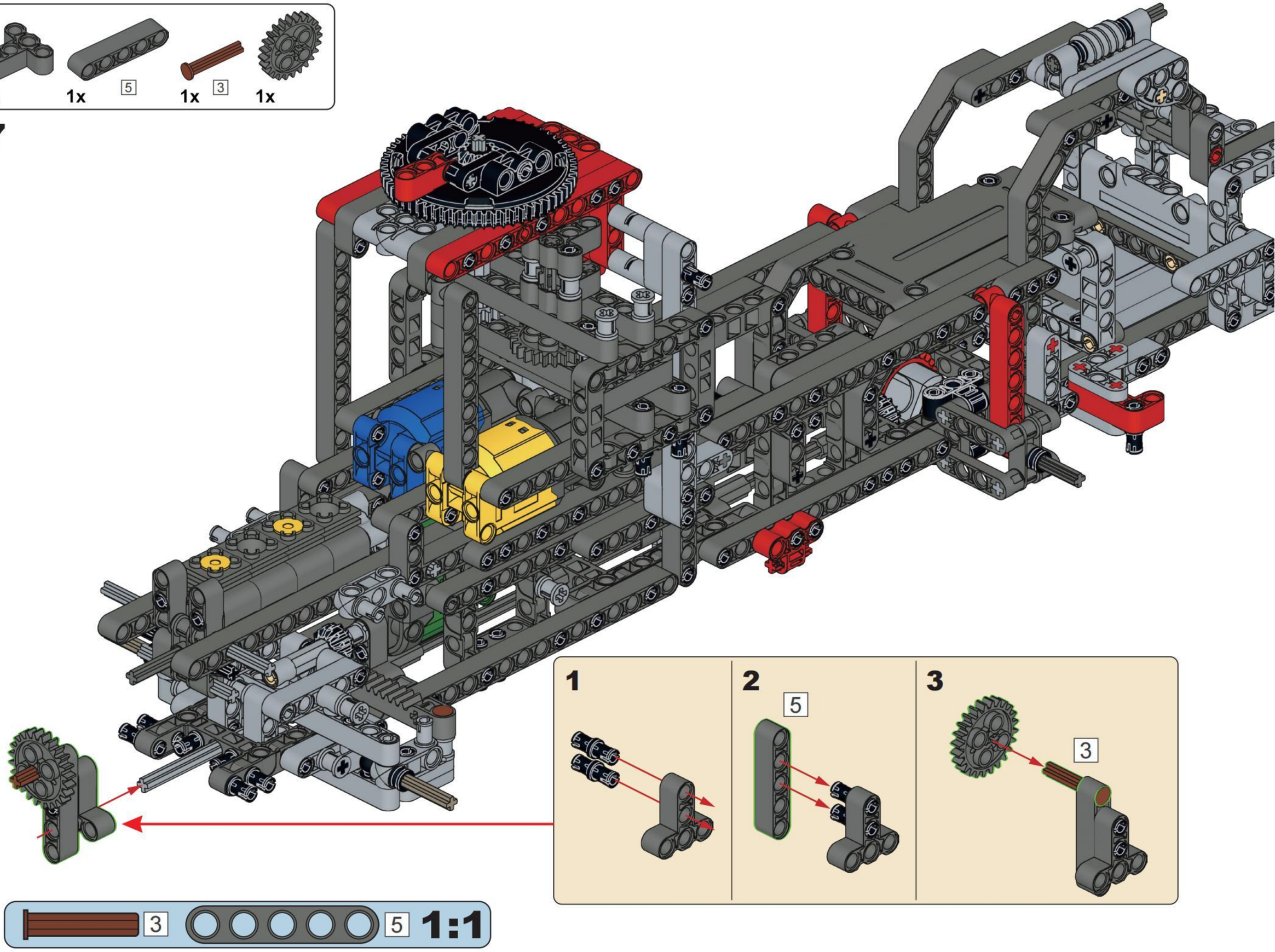

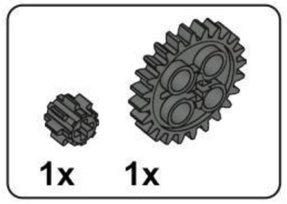


# A188

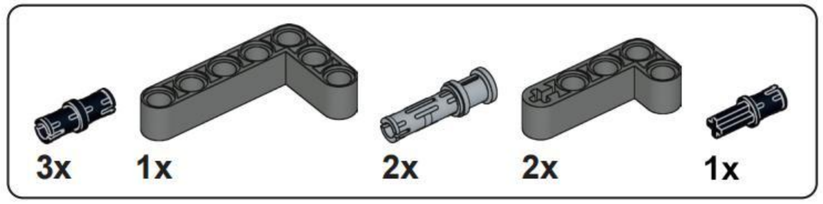


# A189

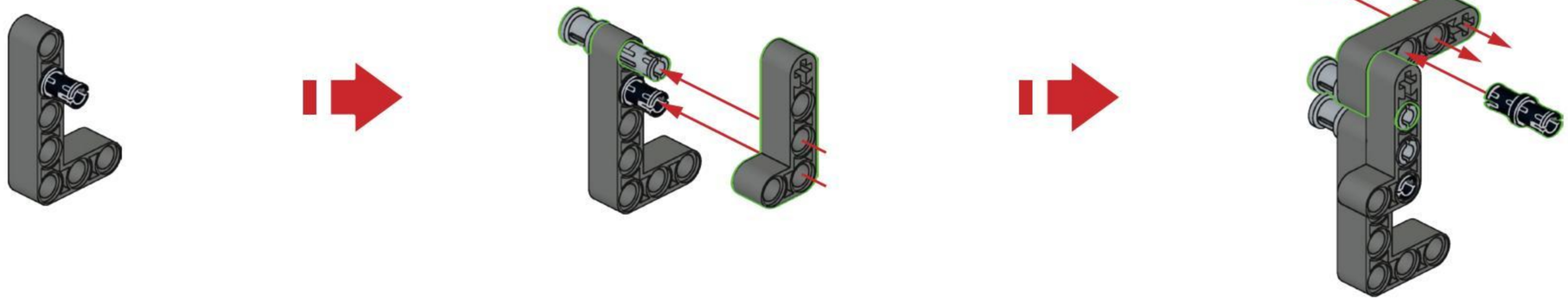

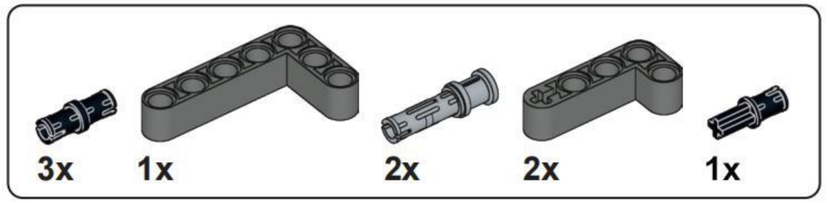


# A190

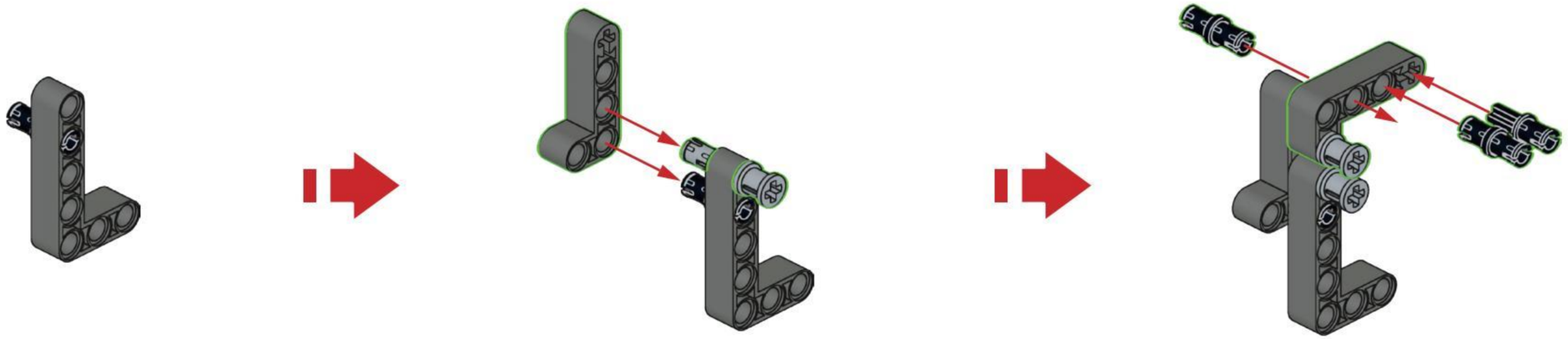

# A191

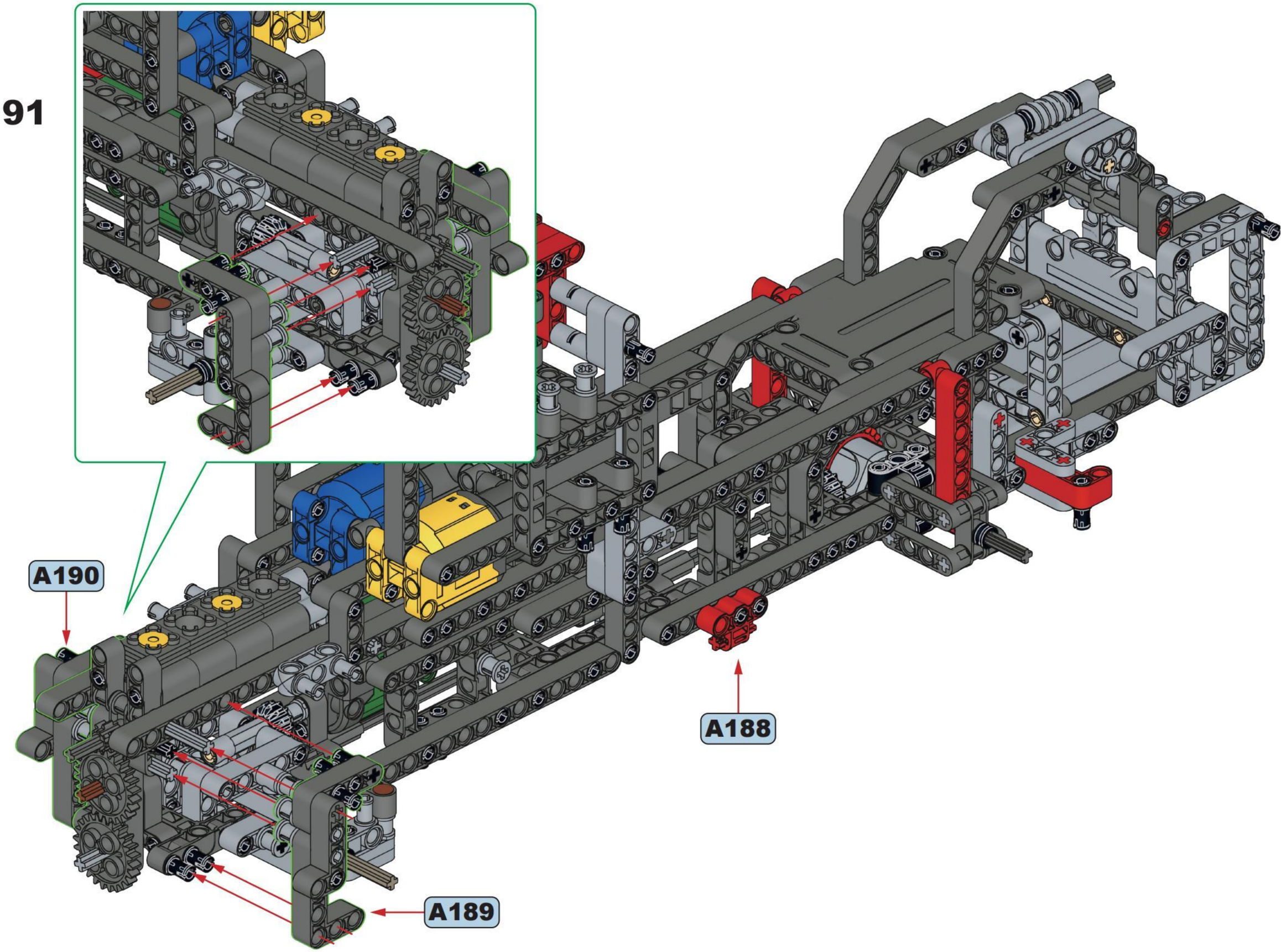

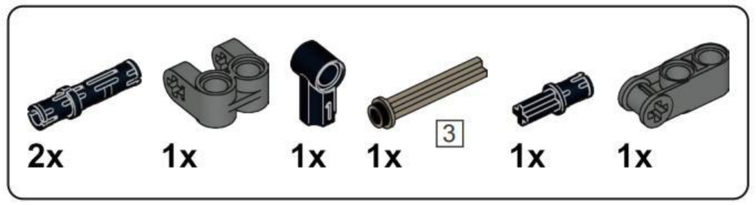


# A192

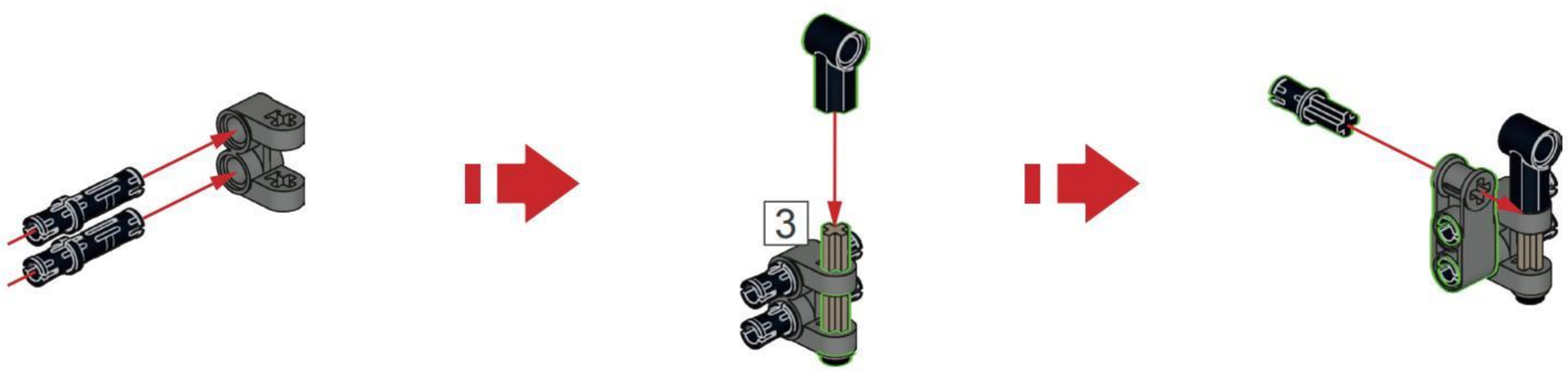


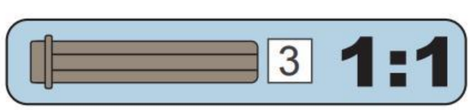


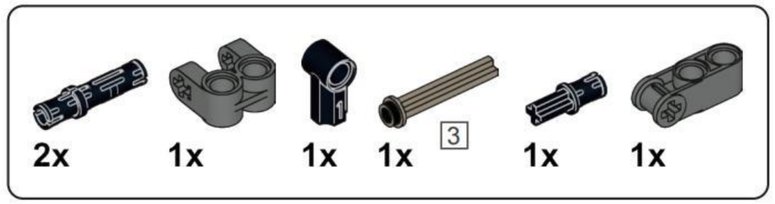


# A193

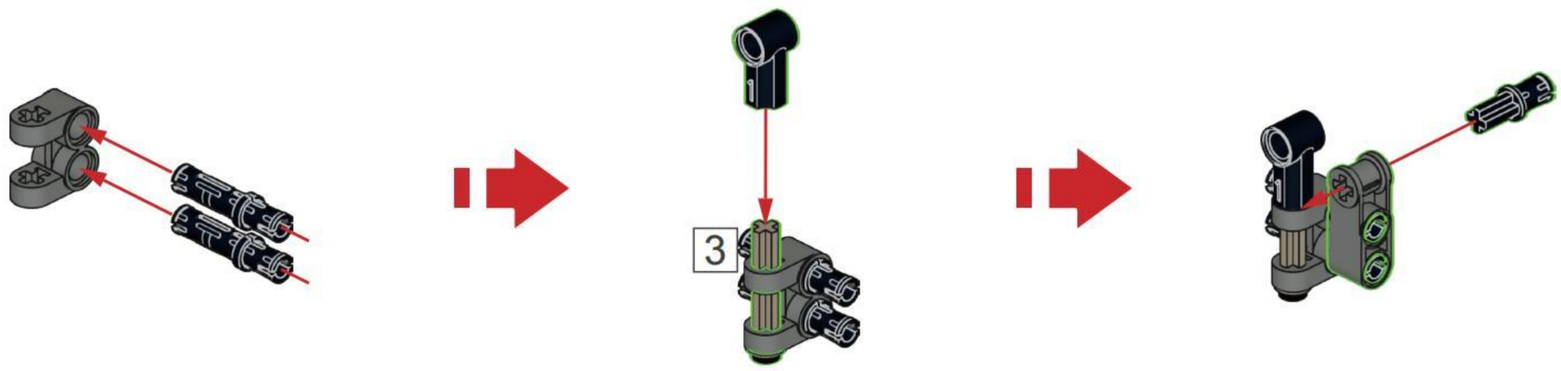

# A194

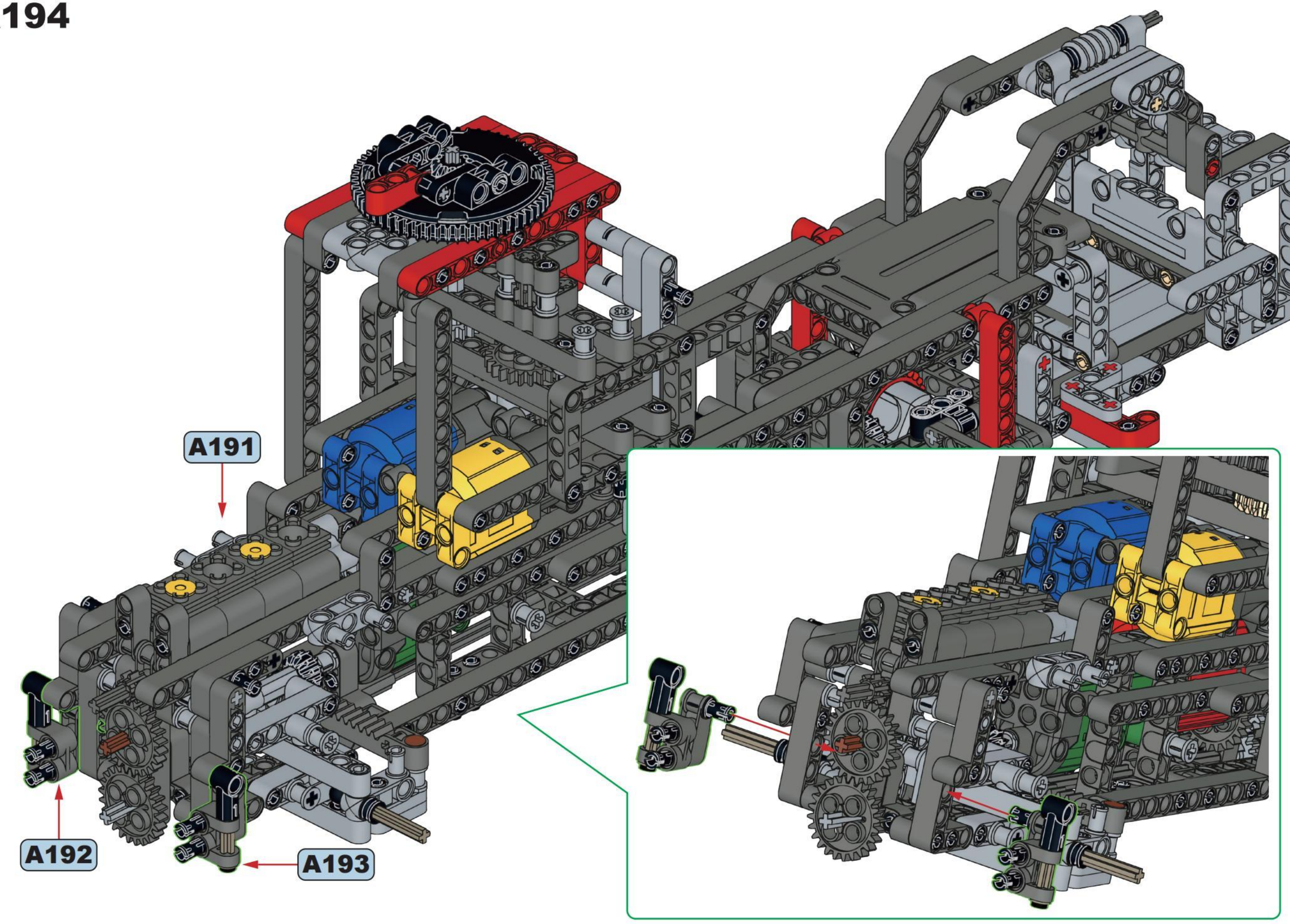

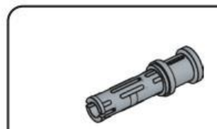


# A195

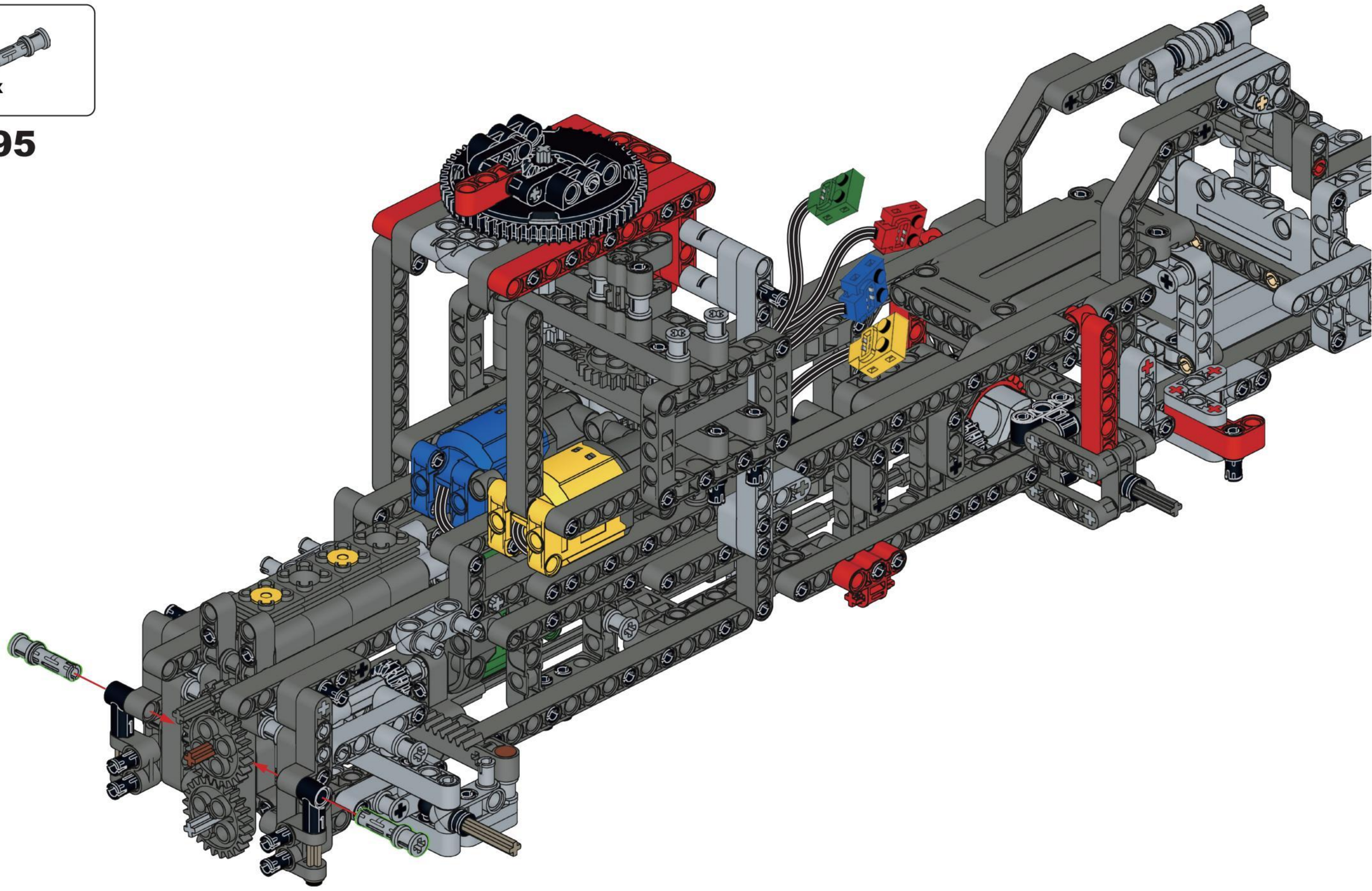

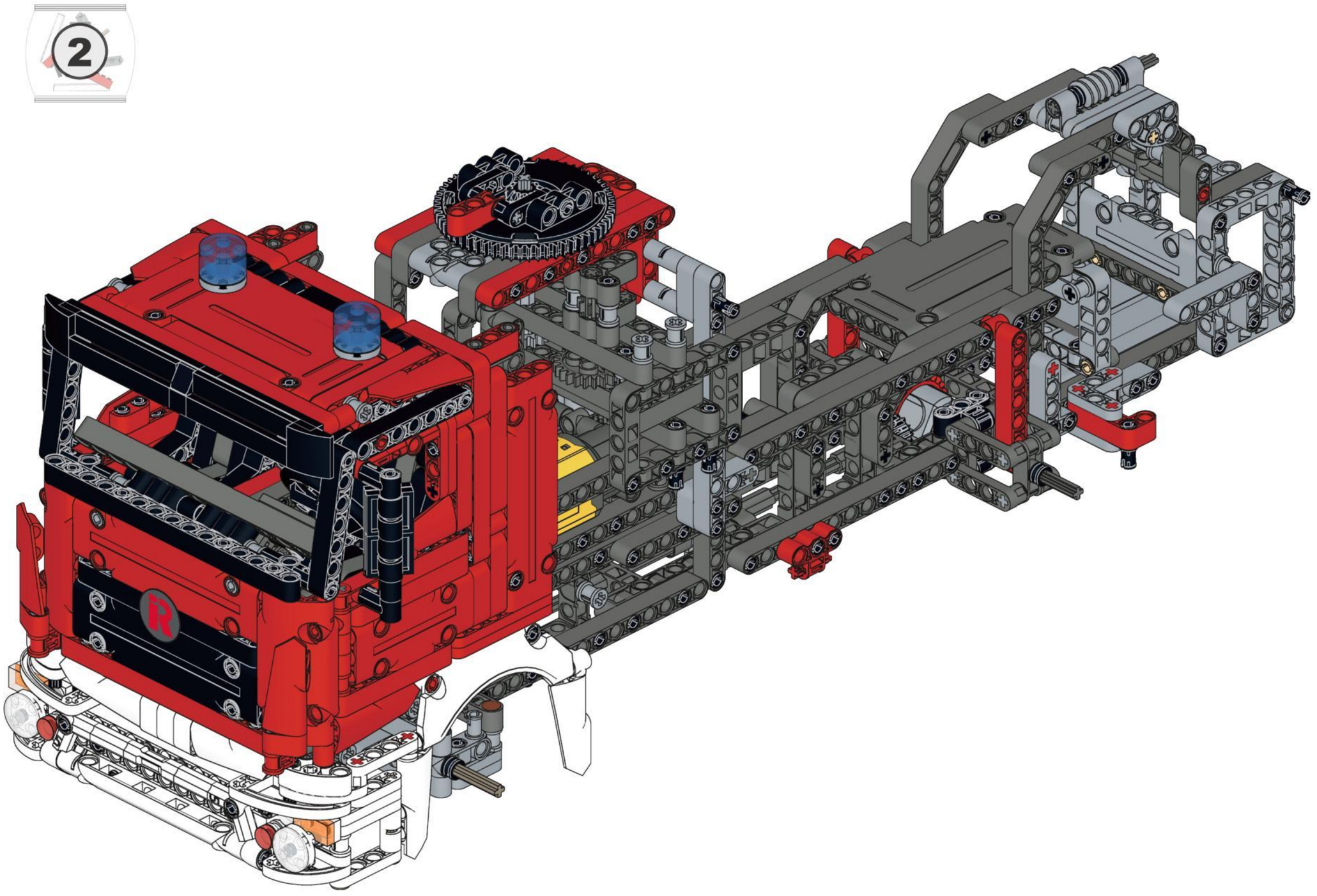

B

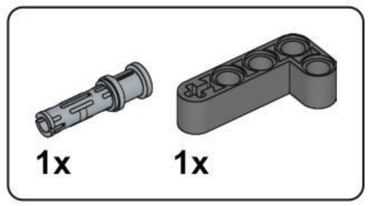


# B1

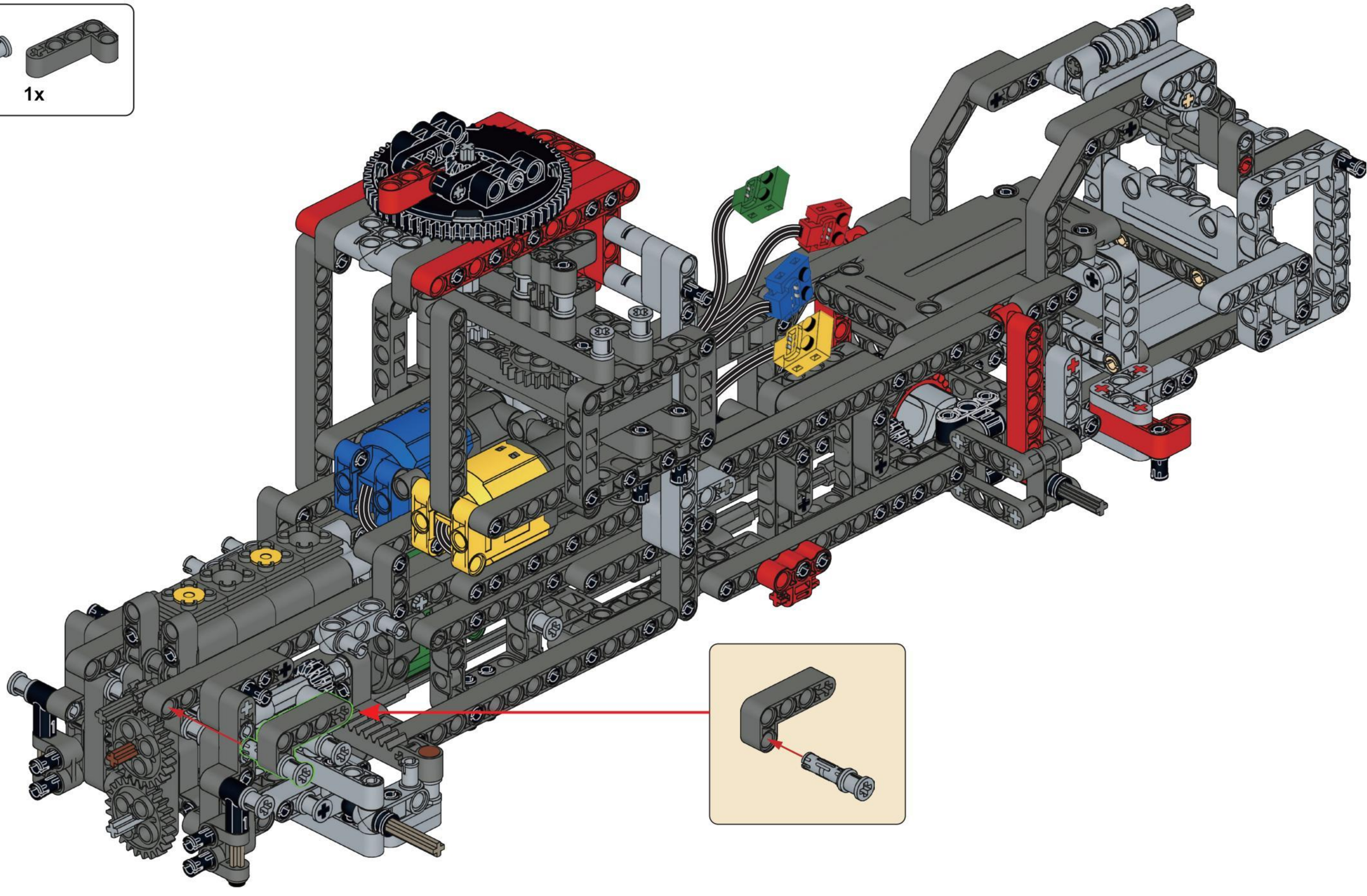

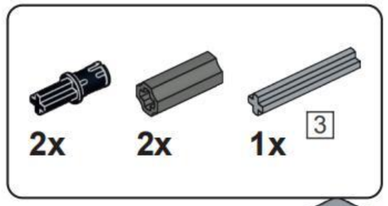


## B2

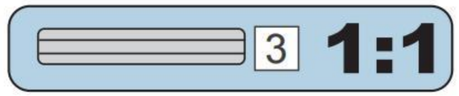




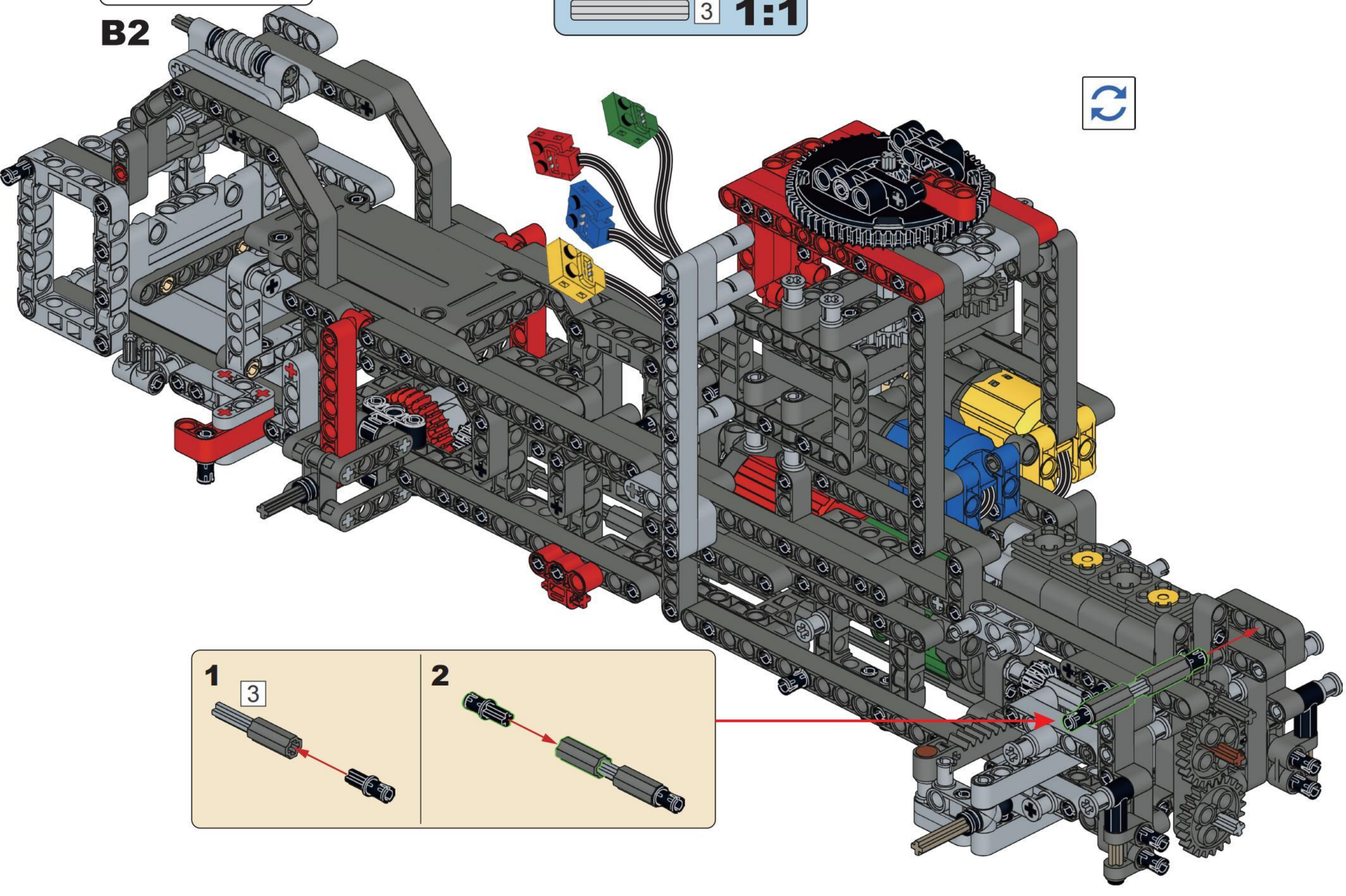

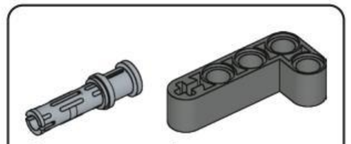


# B3

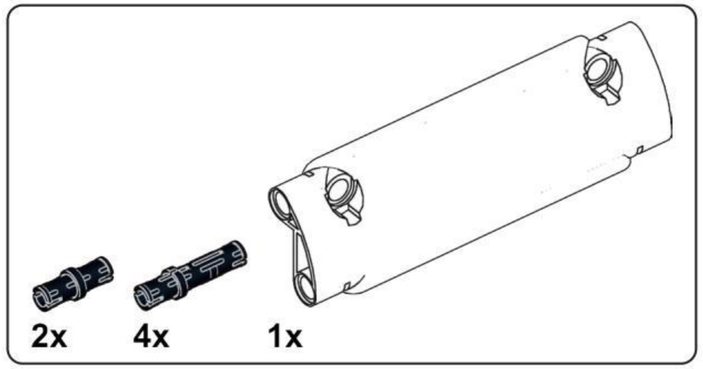


## B4

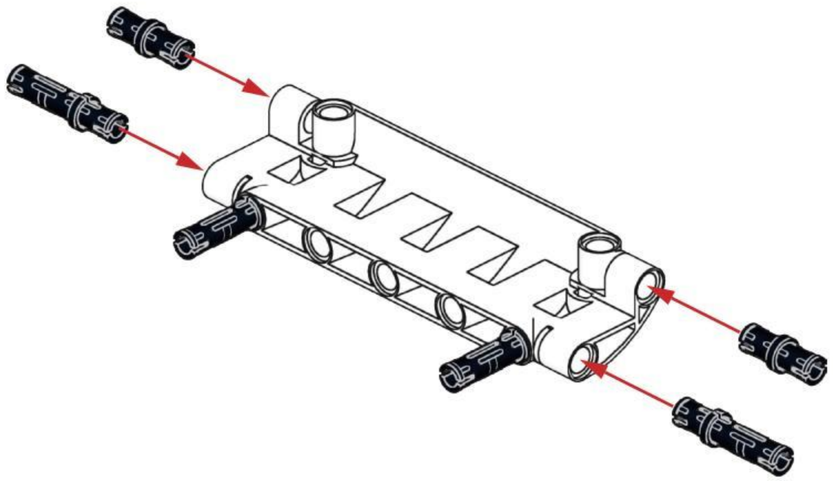

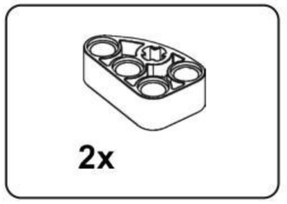


## B5

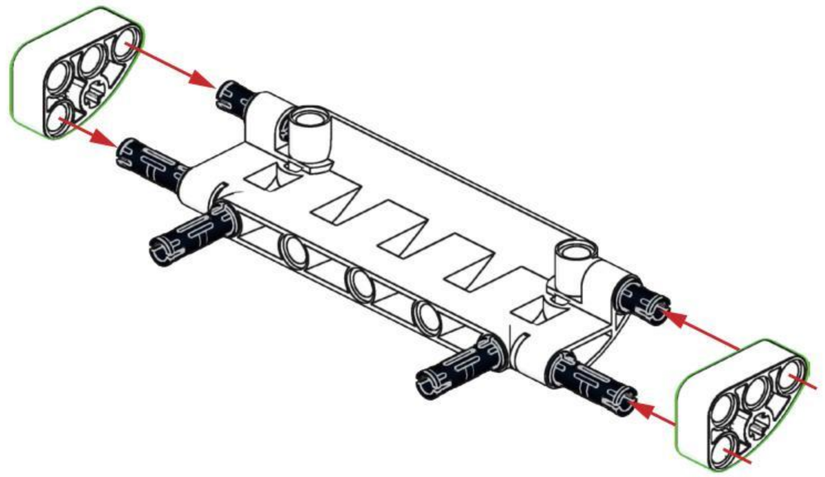

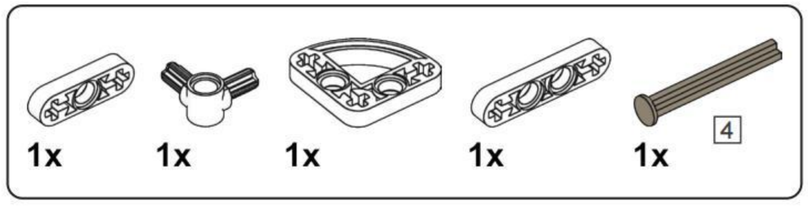


## B6

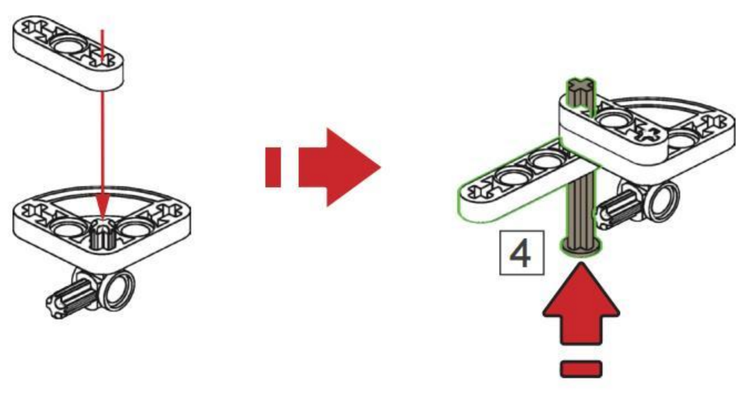


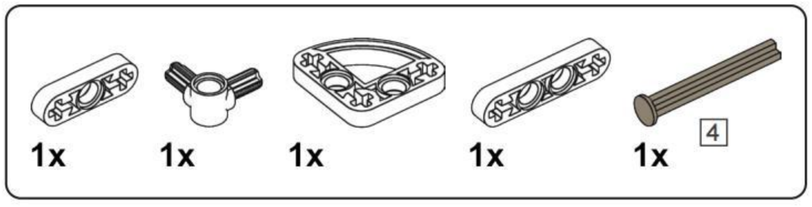


## B7

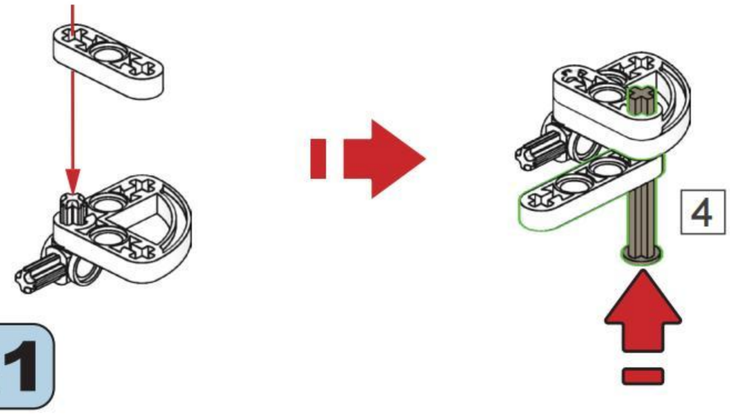


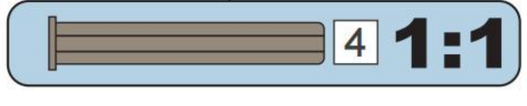

## B8

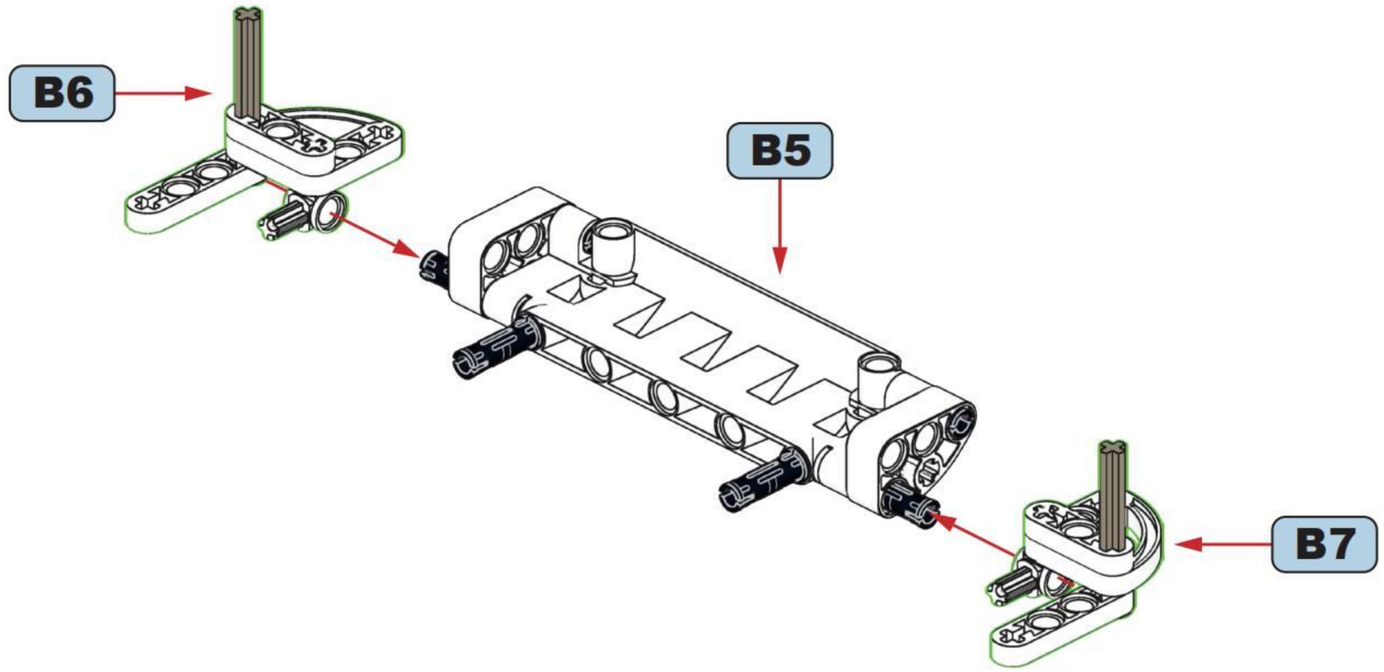


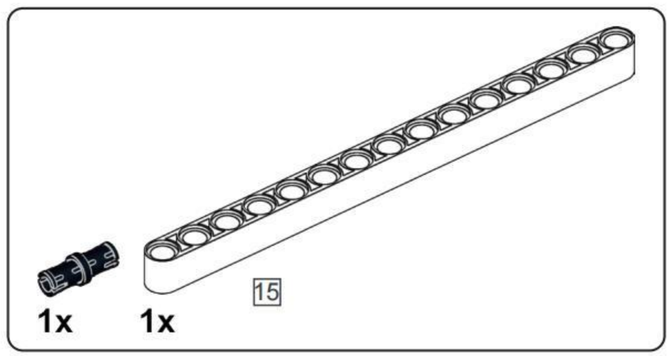


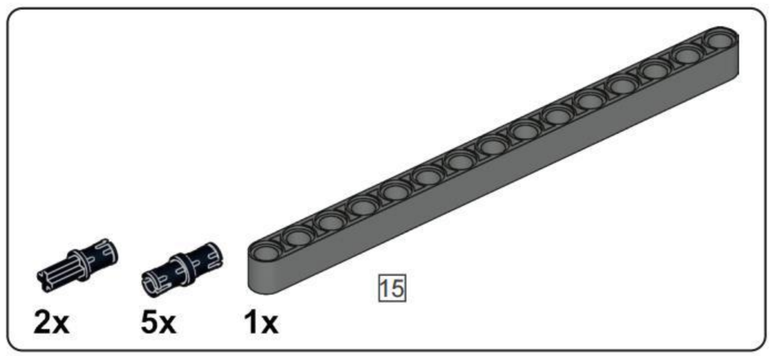


## B9

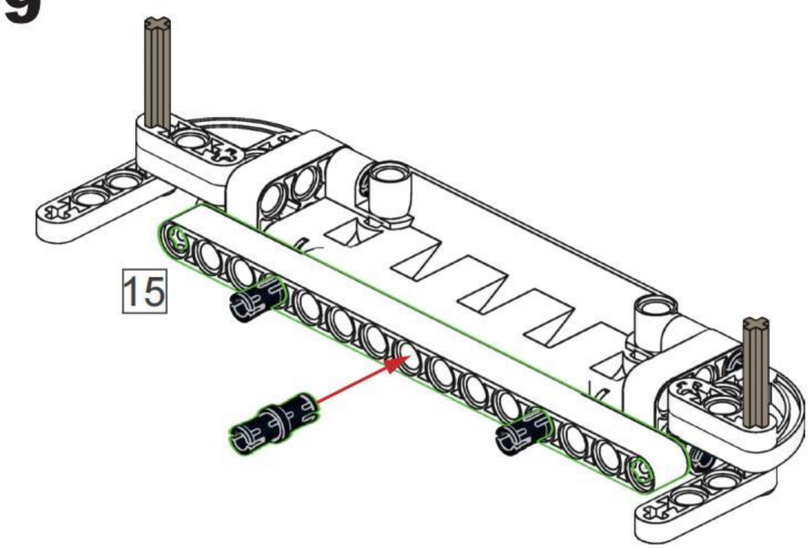


## B10

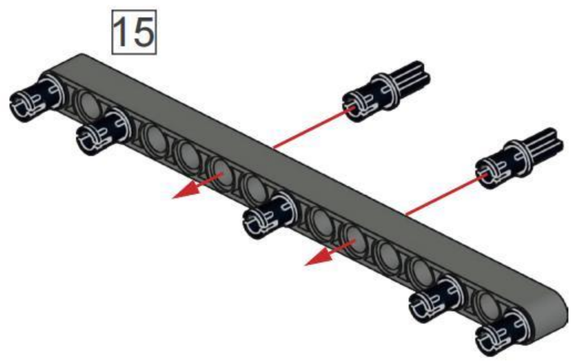


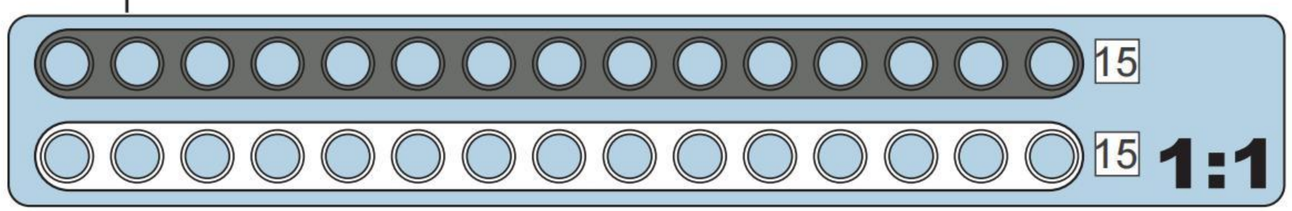

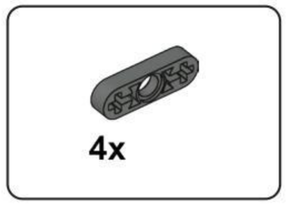


# B11

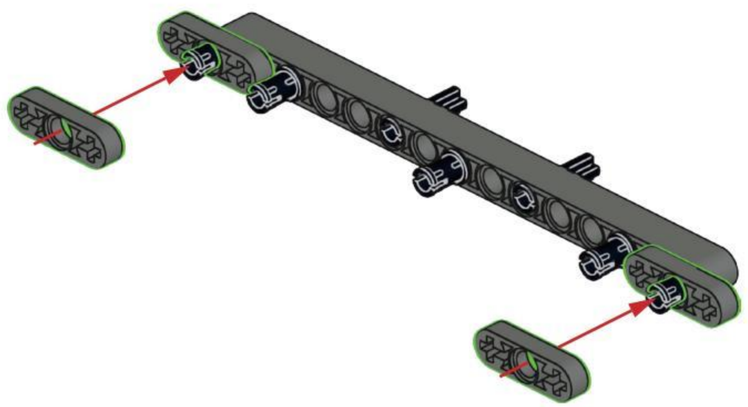

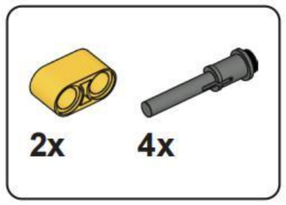


# B12

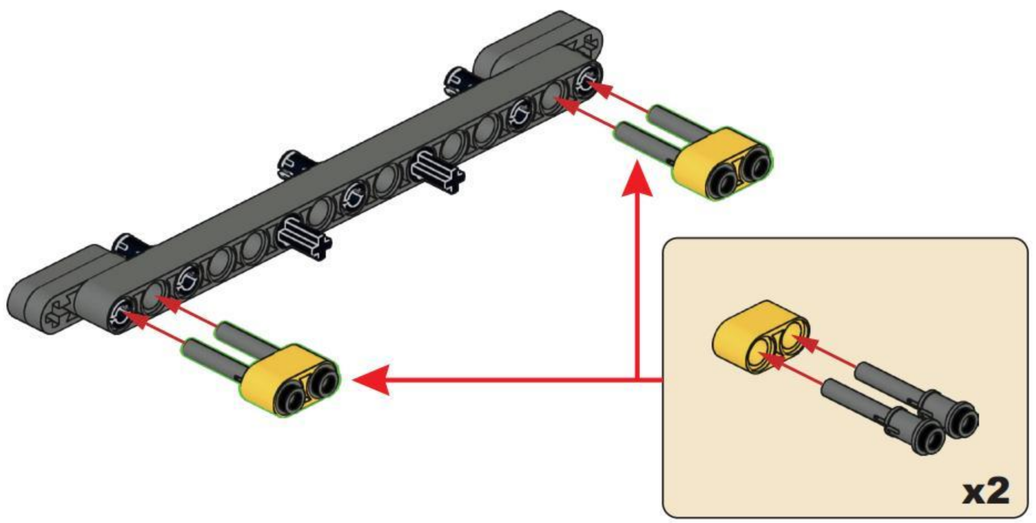


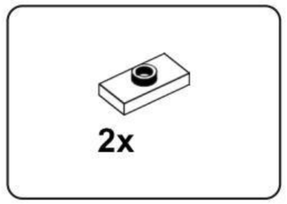


# B13

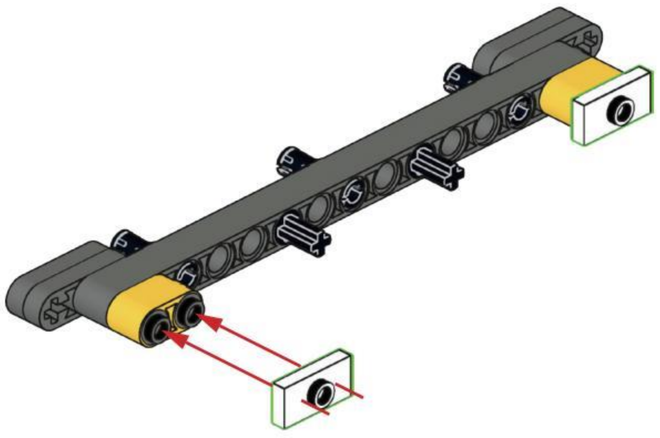

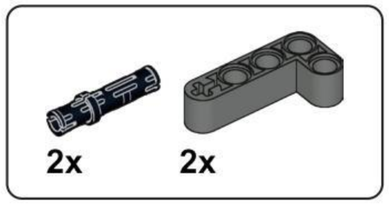


# B14

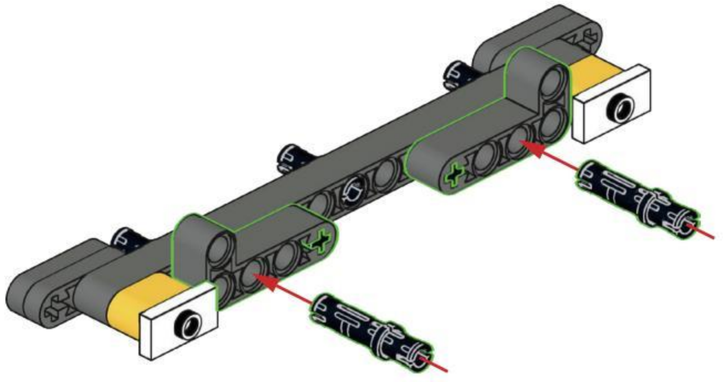

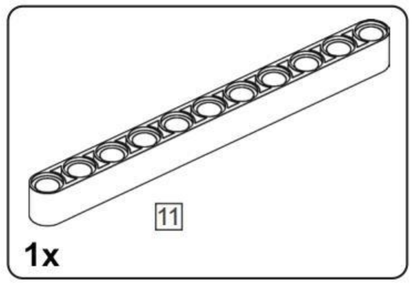


## B15

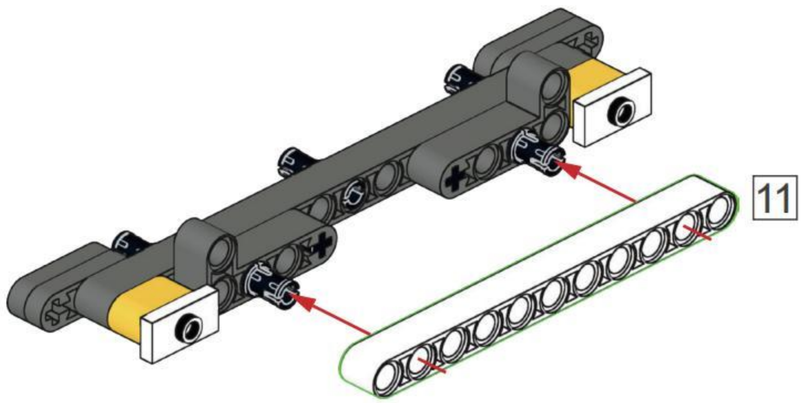


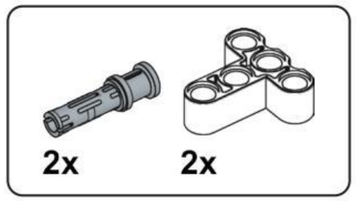


## B16

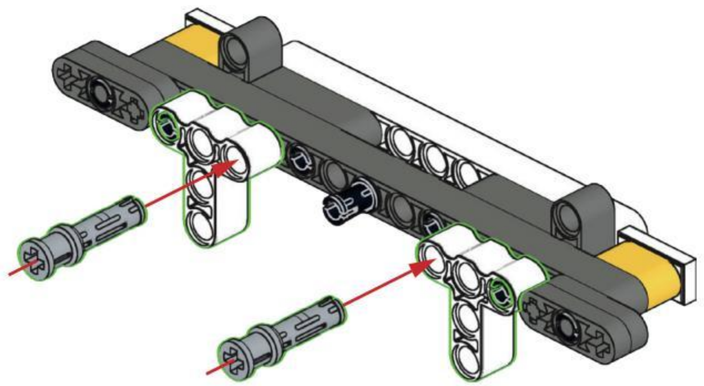

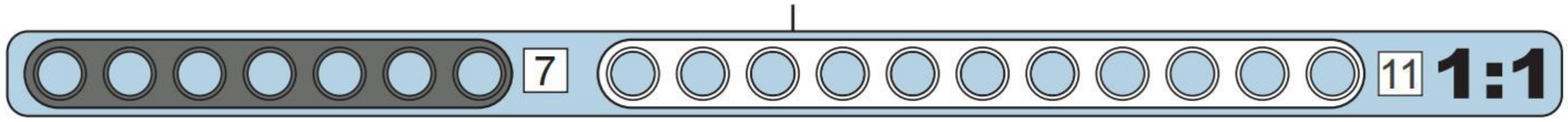


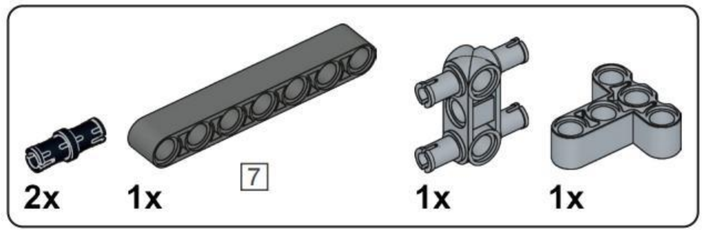


## B17

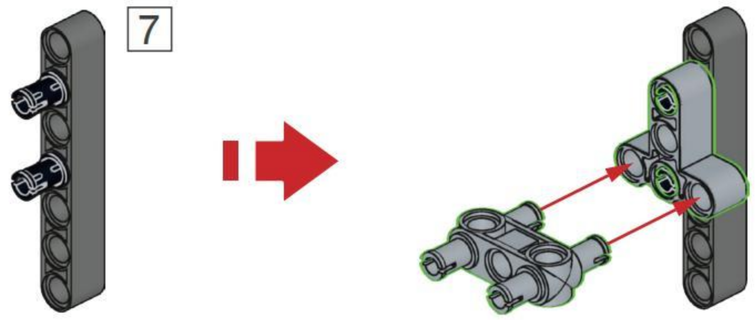


## B18

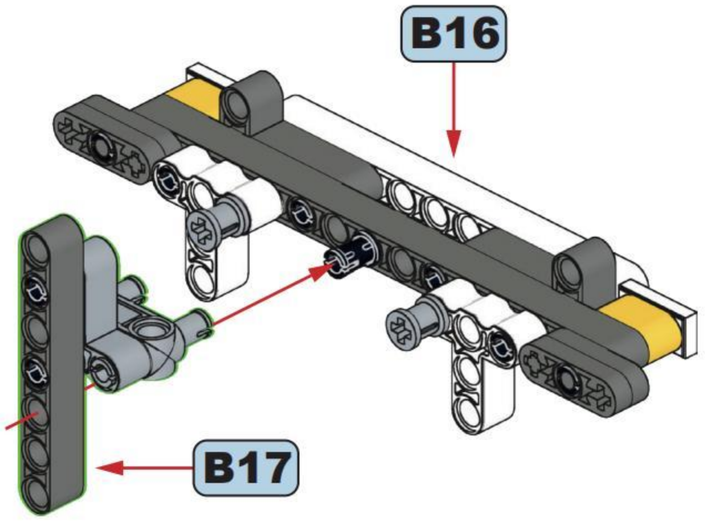

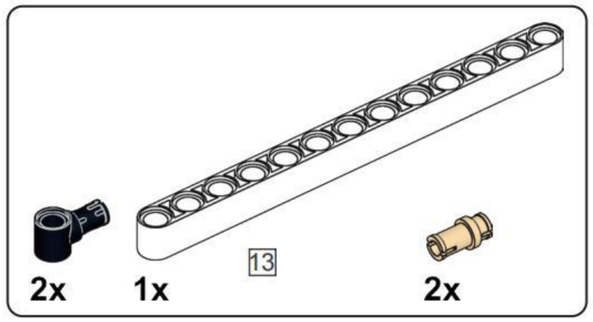


## B19

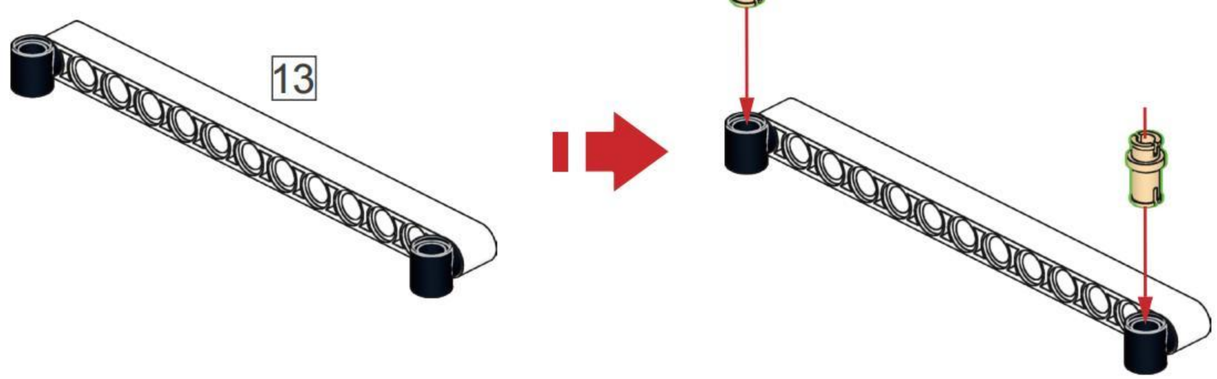


## B20

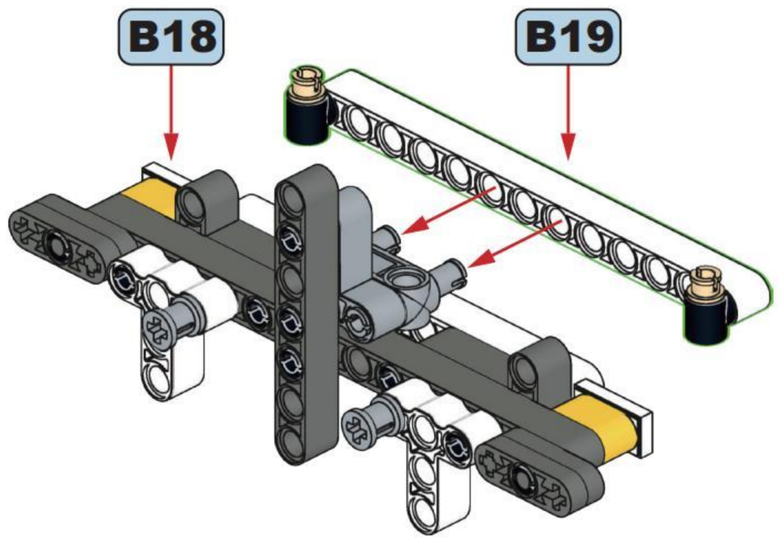


## B21

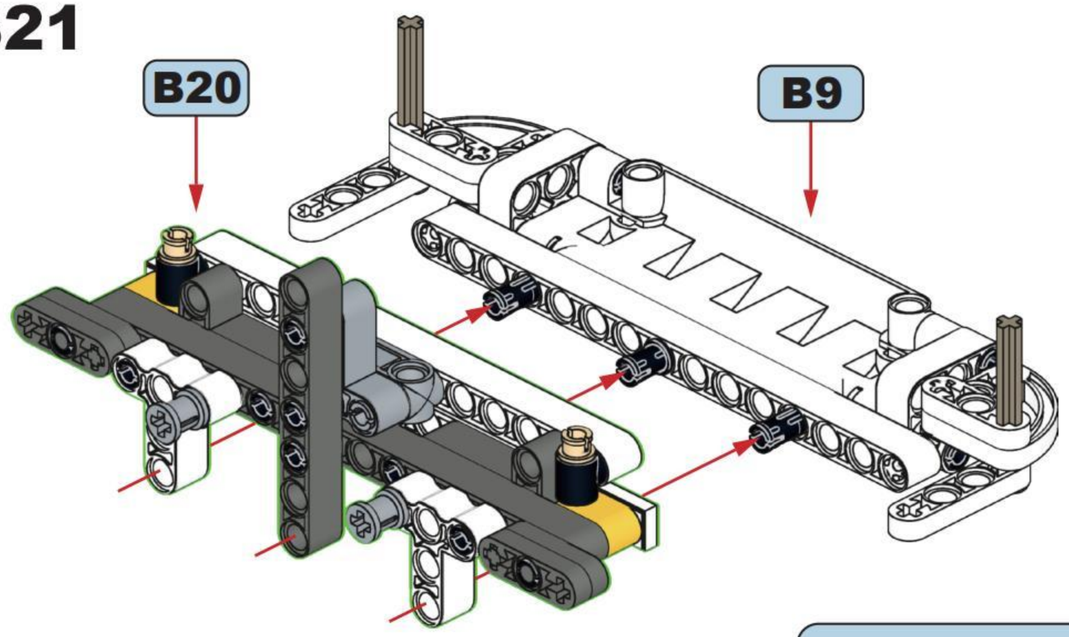


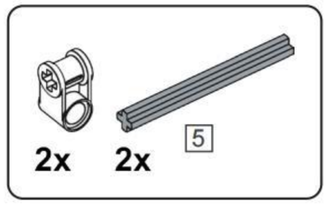


## B22

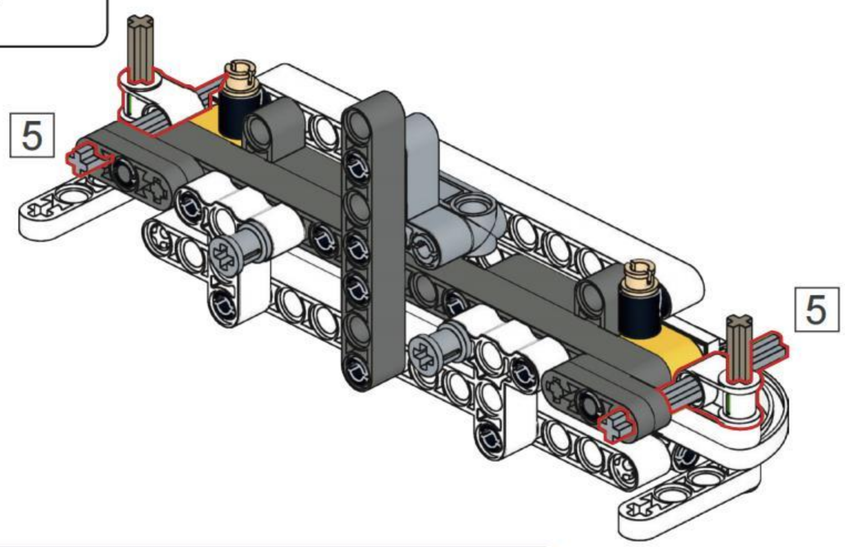


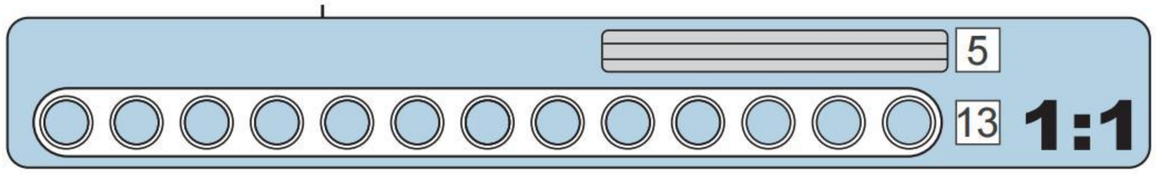

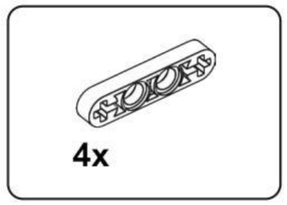


# B23

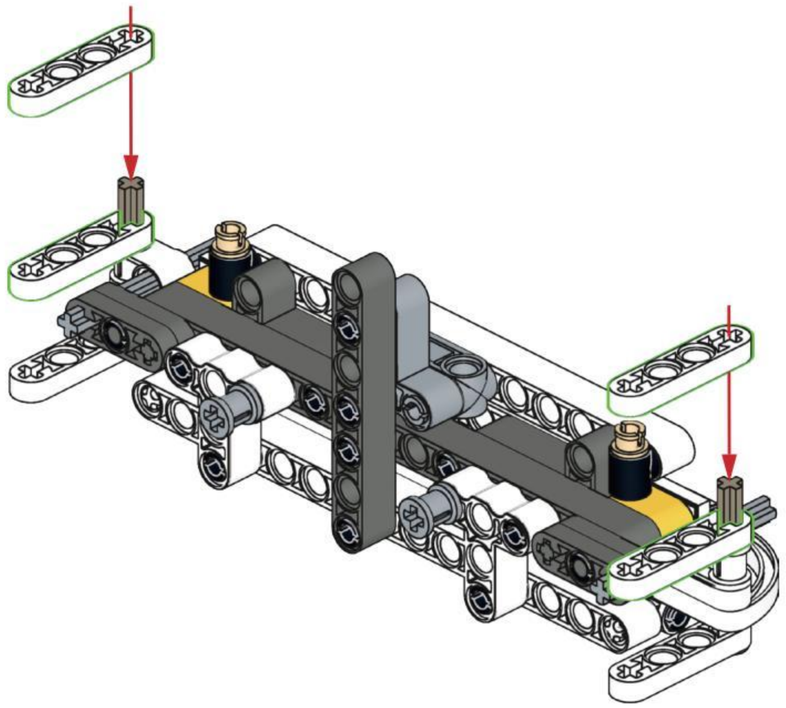

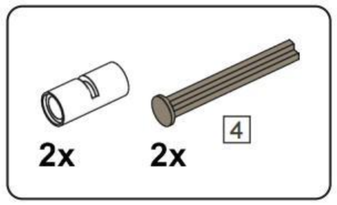


# B24

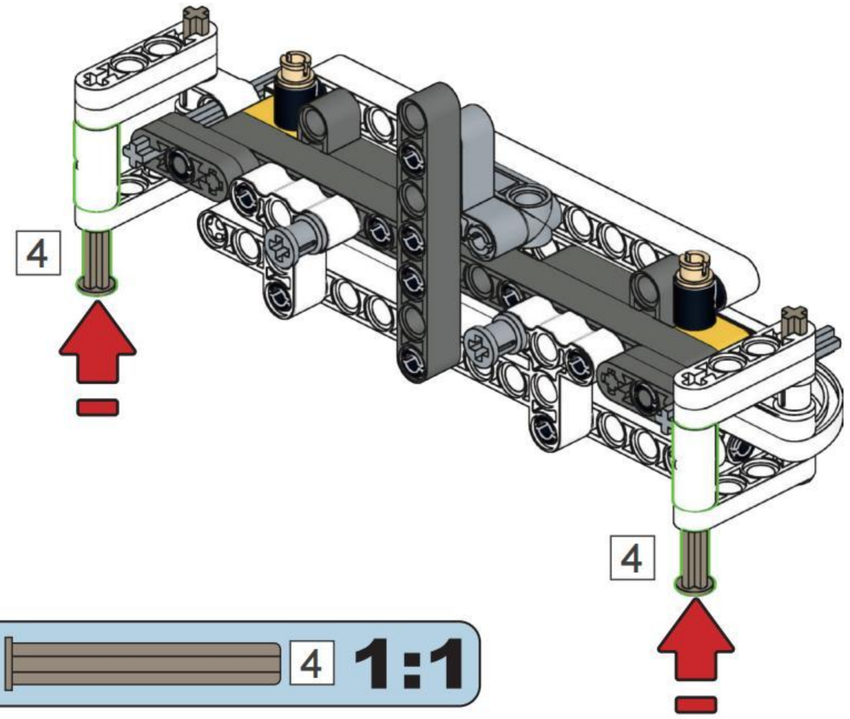


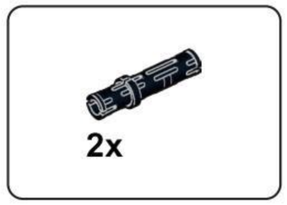


# B25

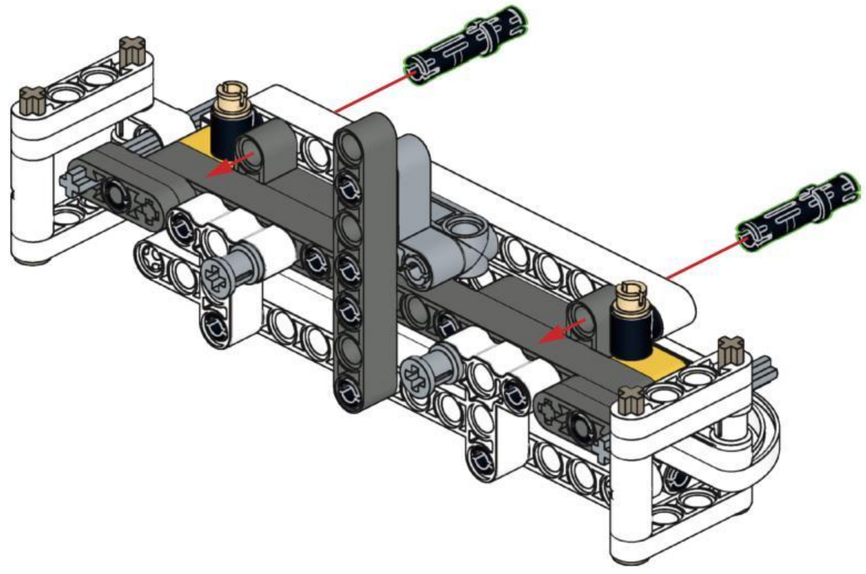

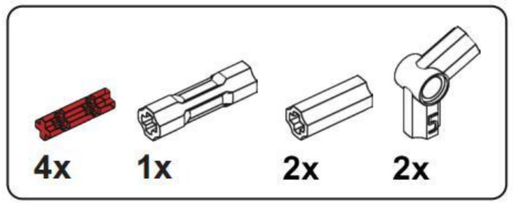


## B26

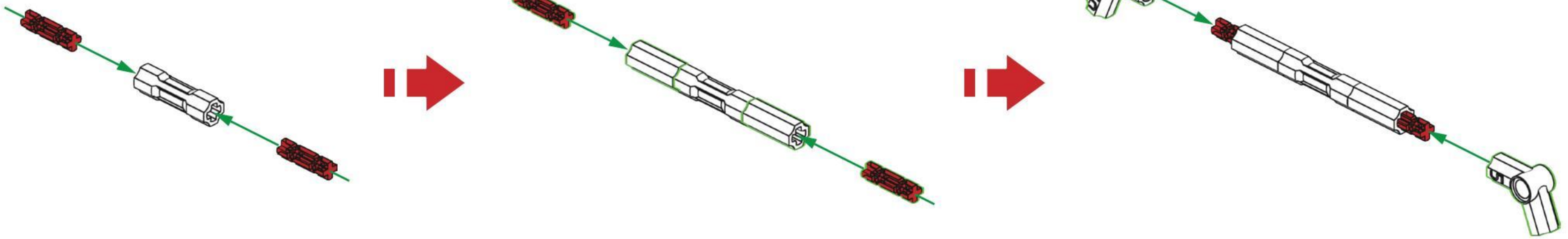

## B27

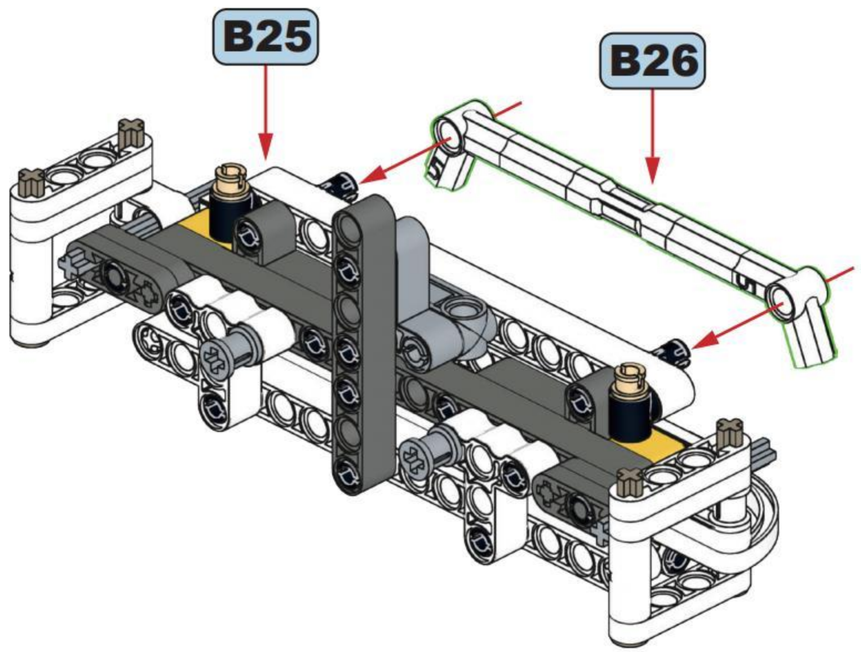


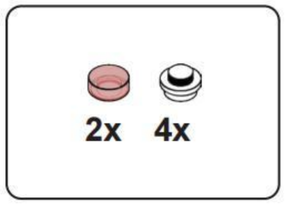


## B28

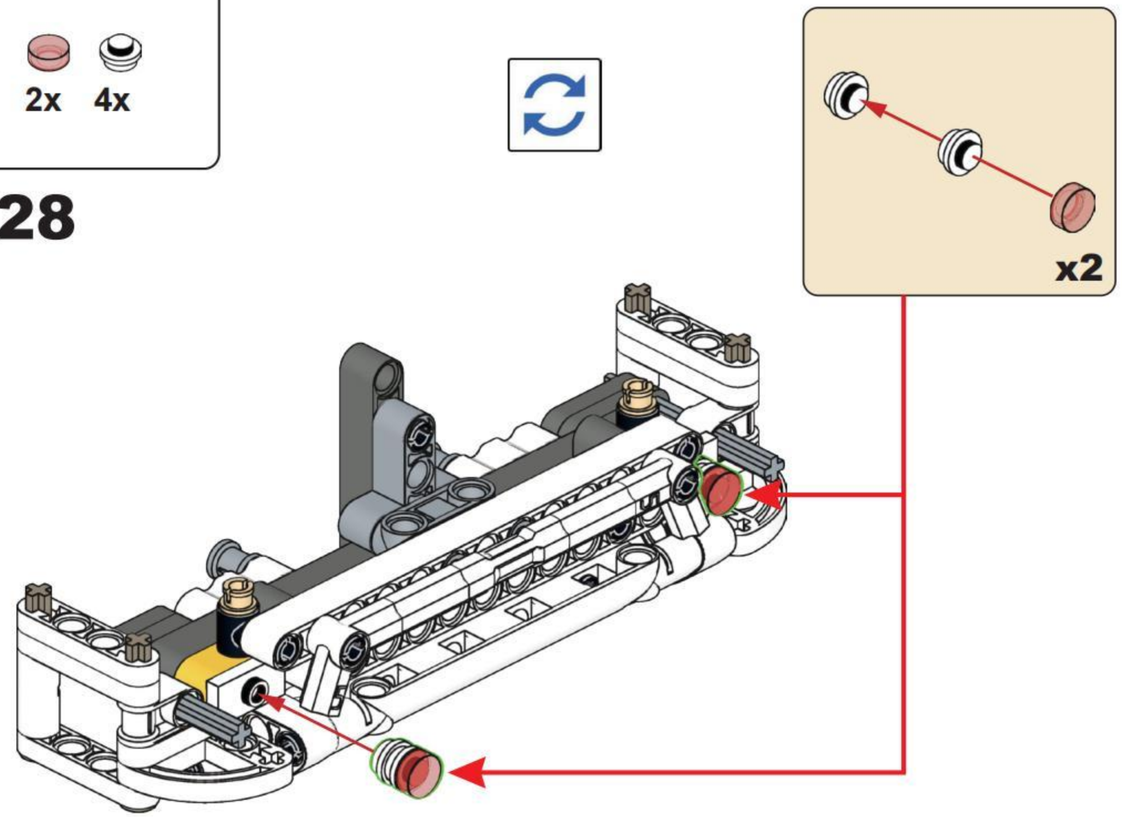

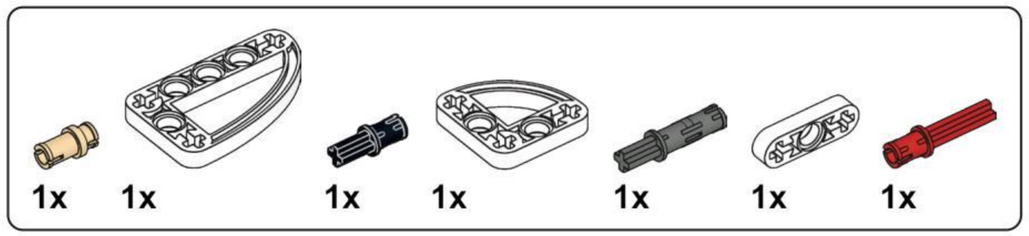


## B29

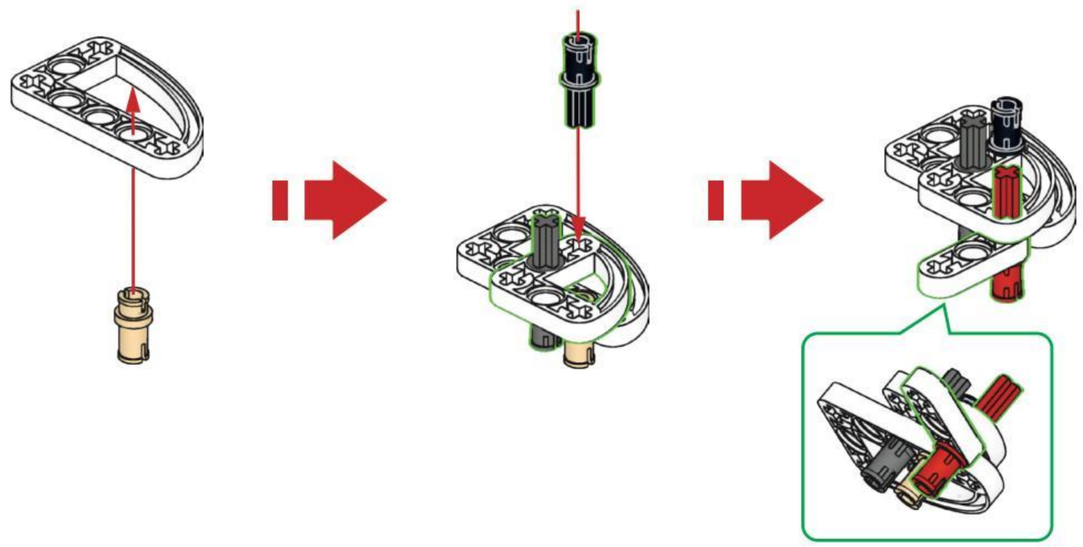

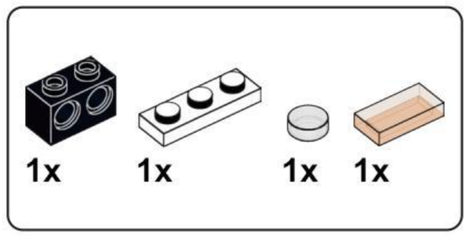


## B30

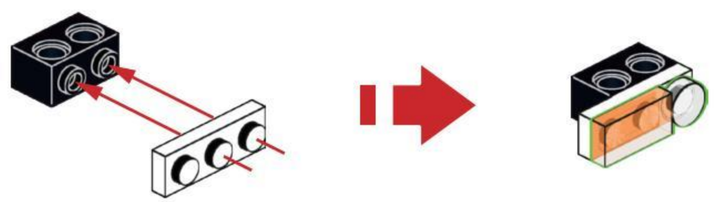

## B31

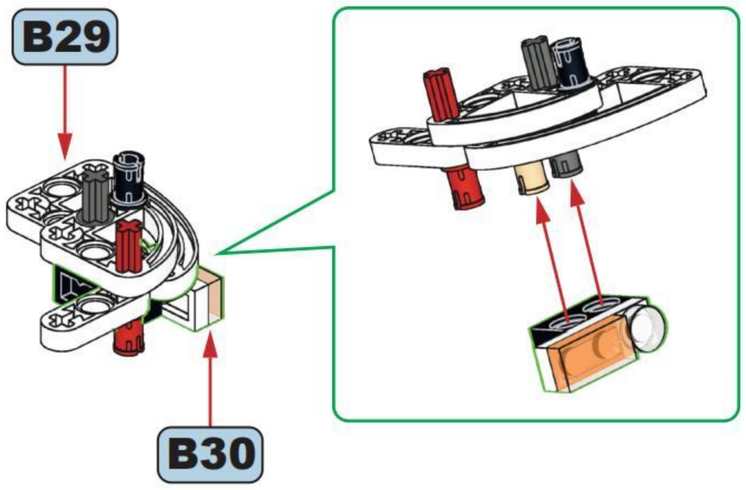


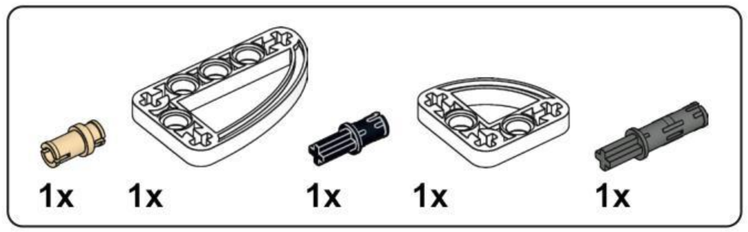


## B32

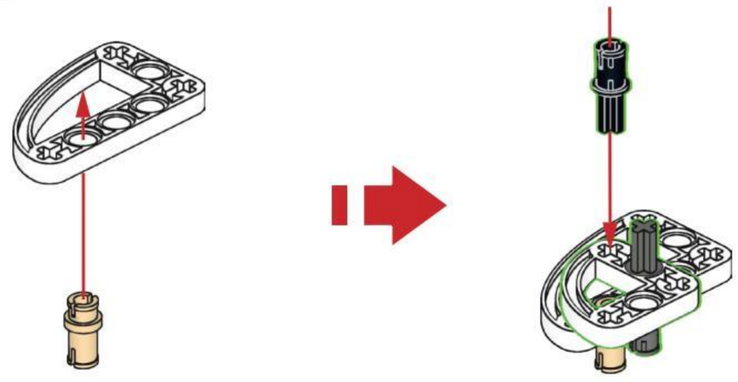

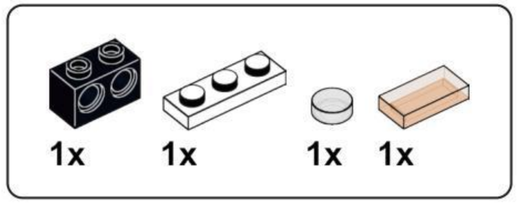


## B33

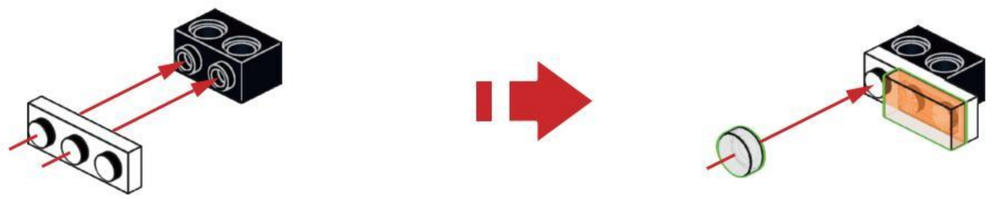

## B34

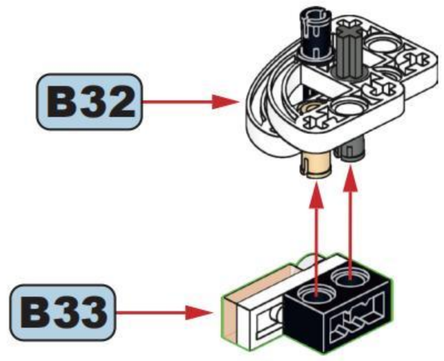


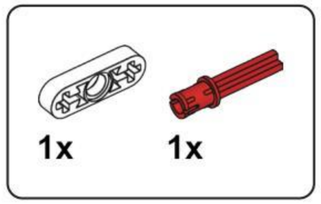


## B35

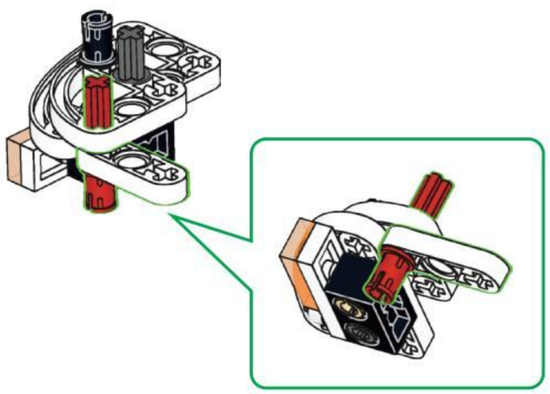

## B36

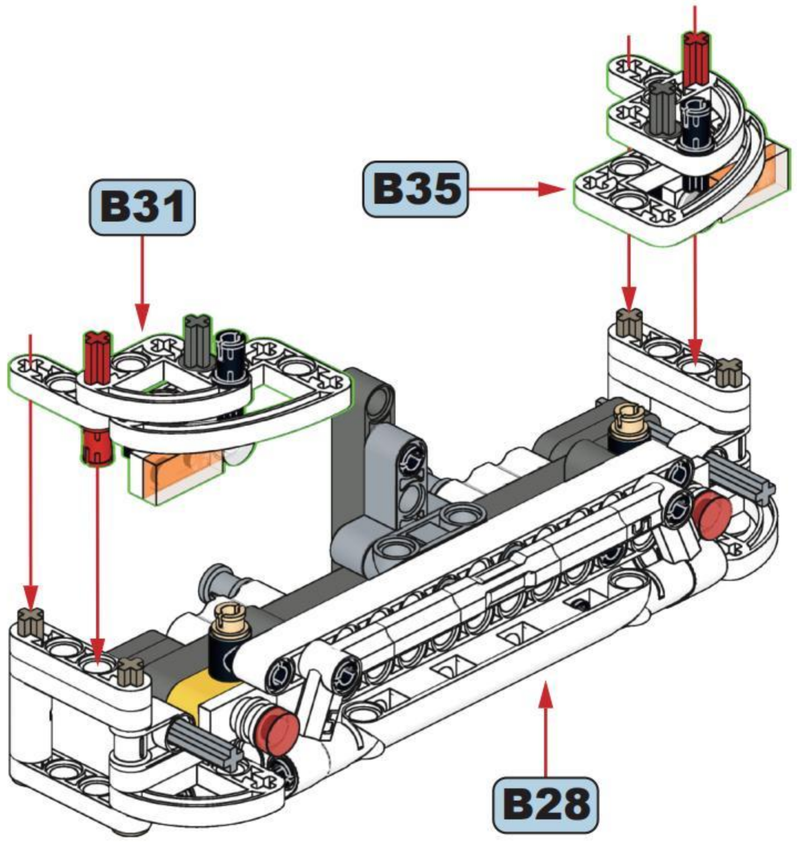

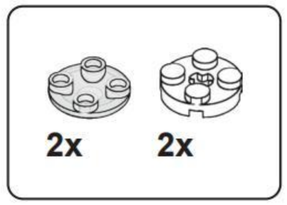


## B37

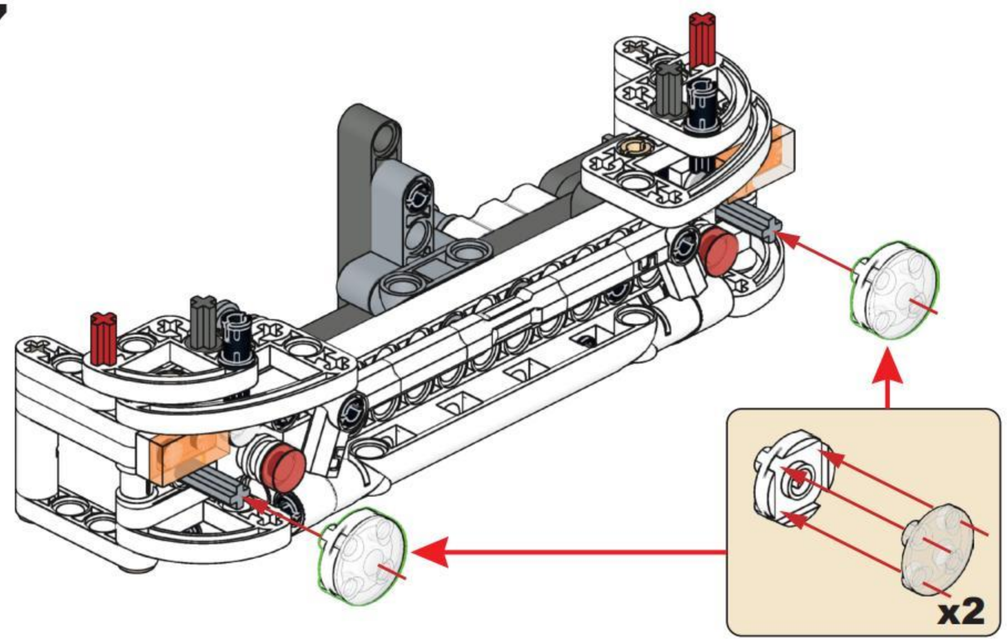


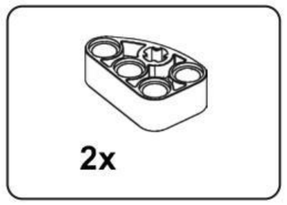


## B38

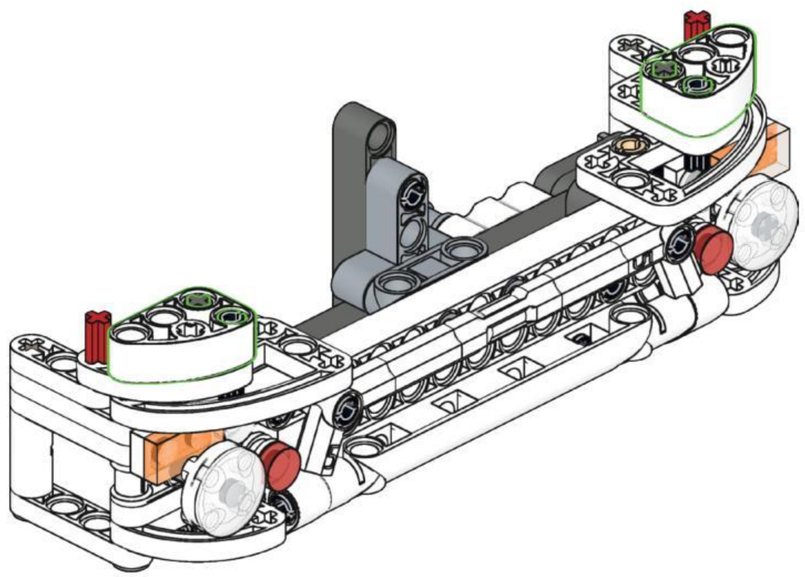

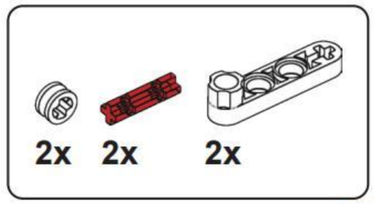


## B39

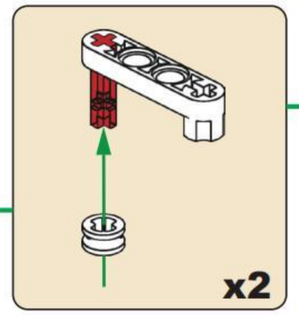


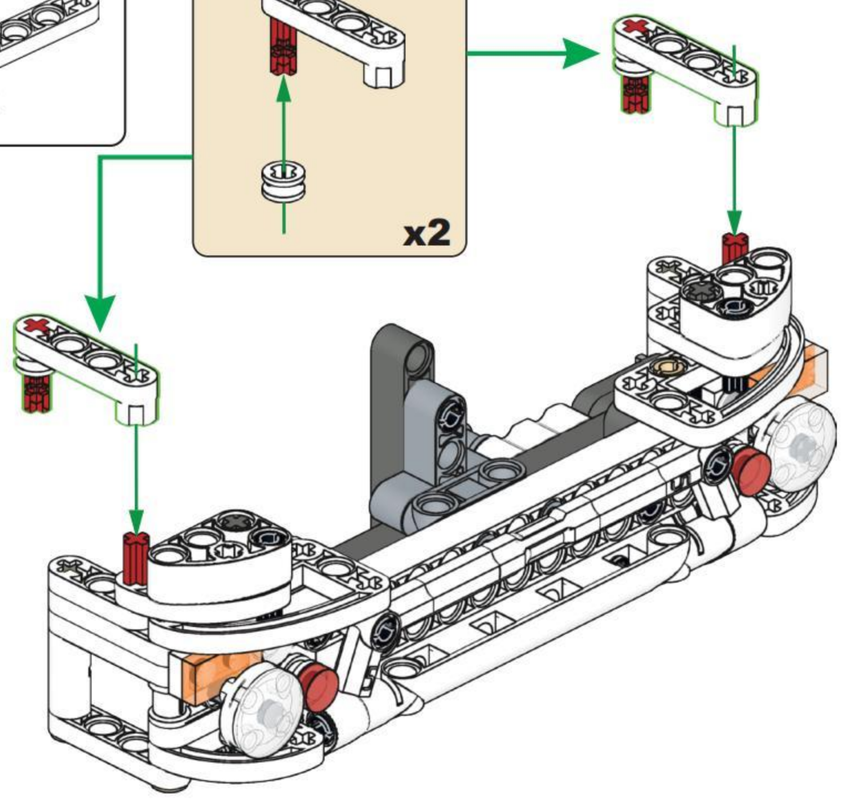

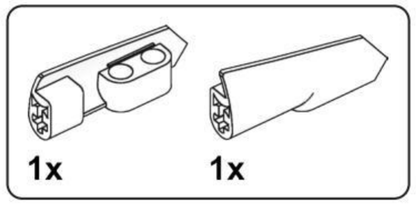


## B40

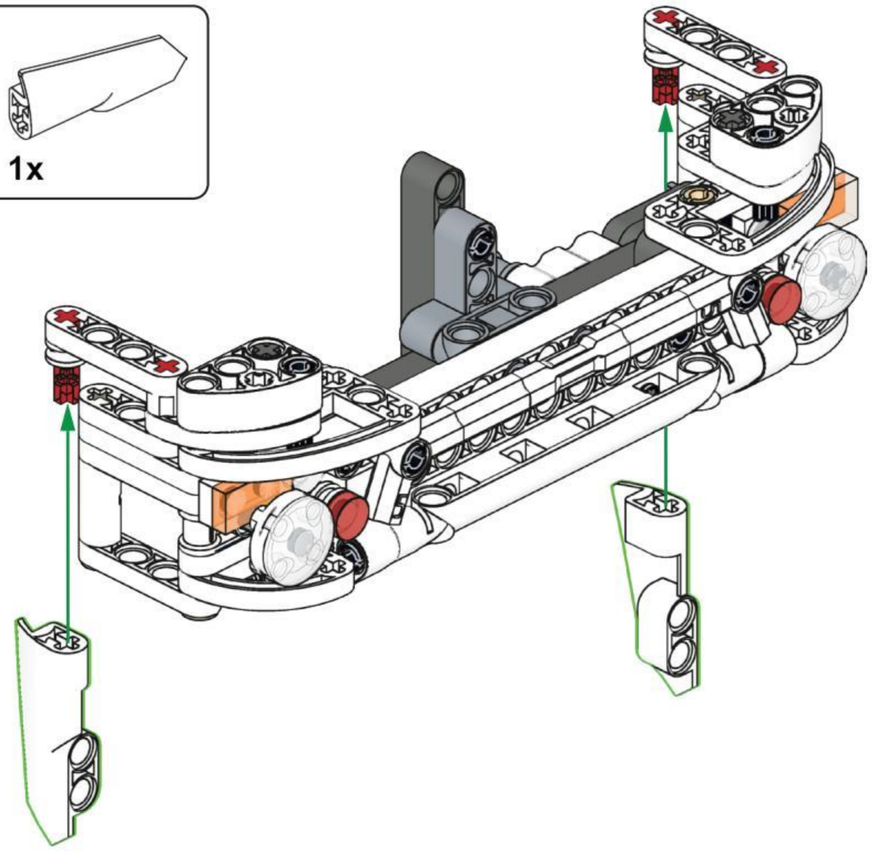

# B41

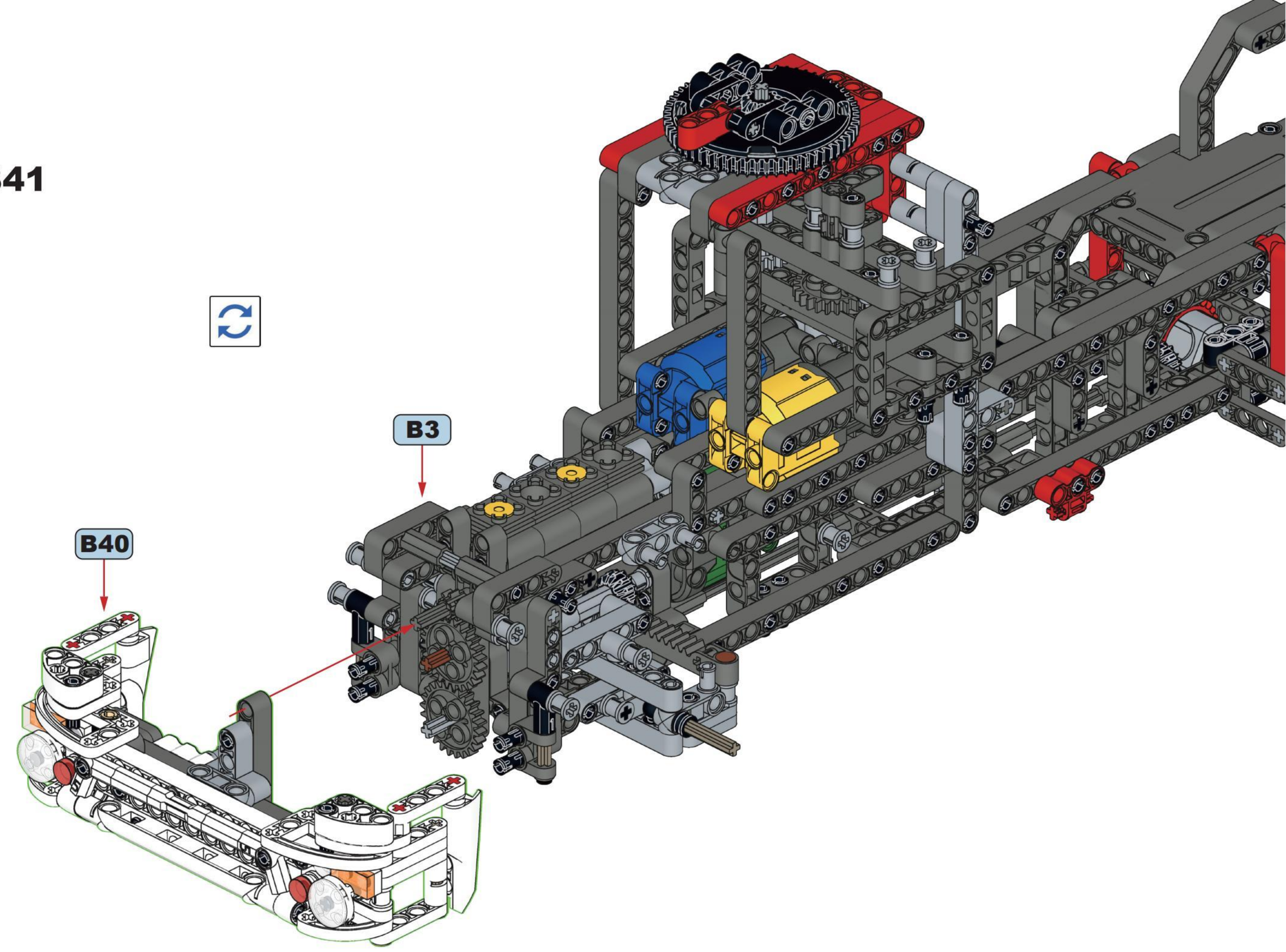

# B42

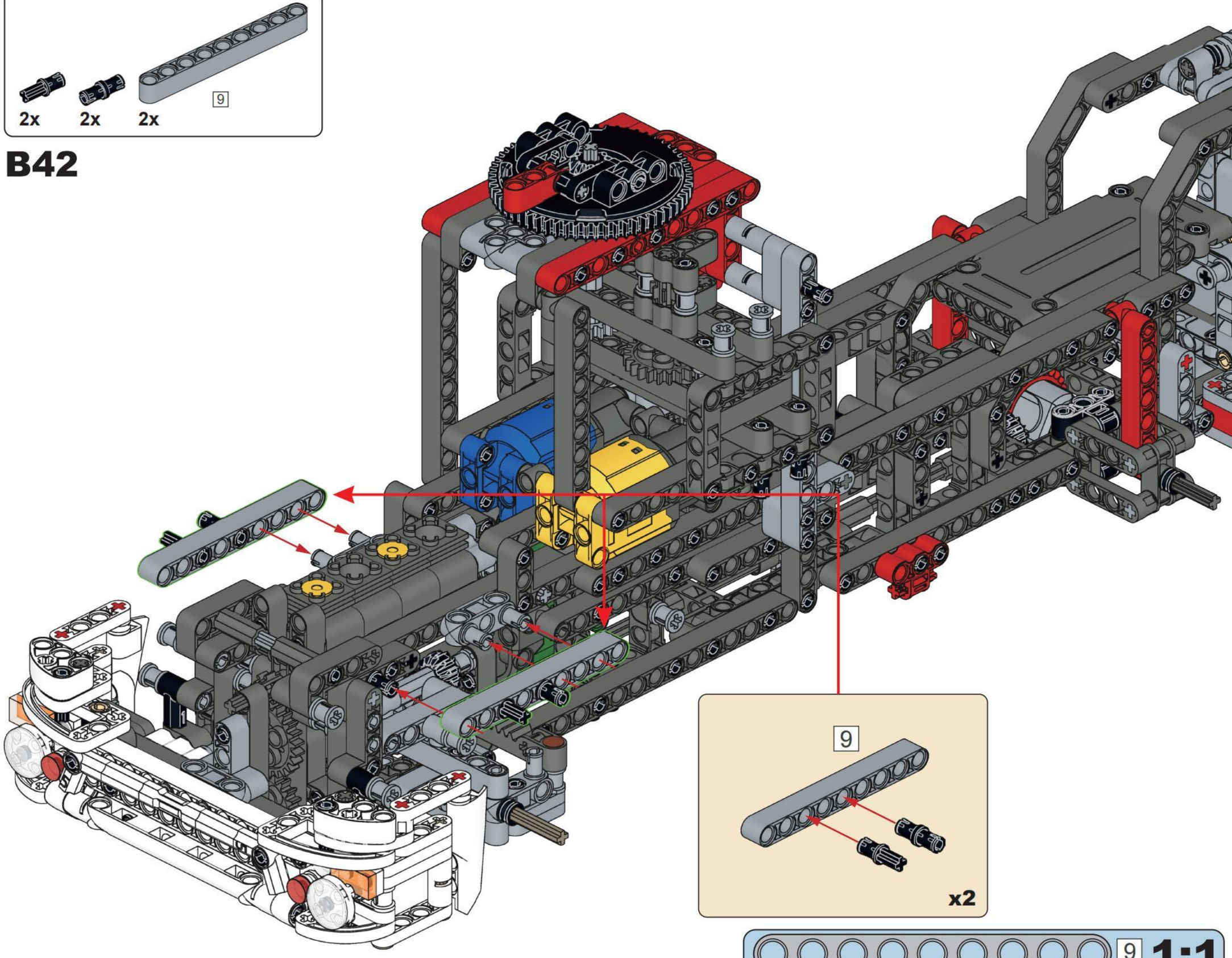




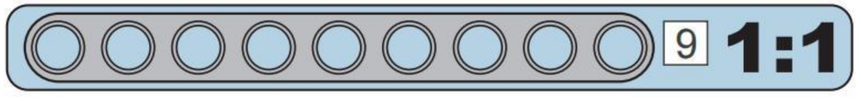

# B43

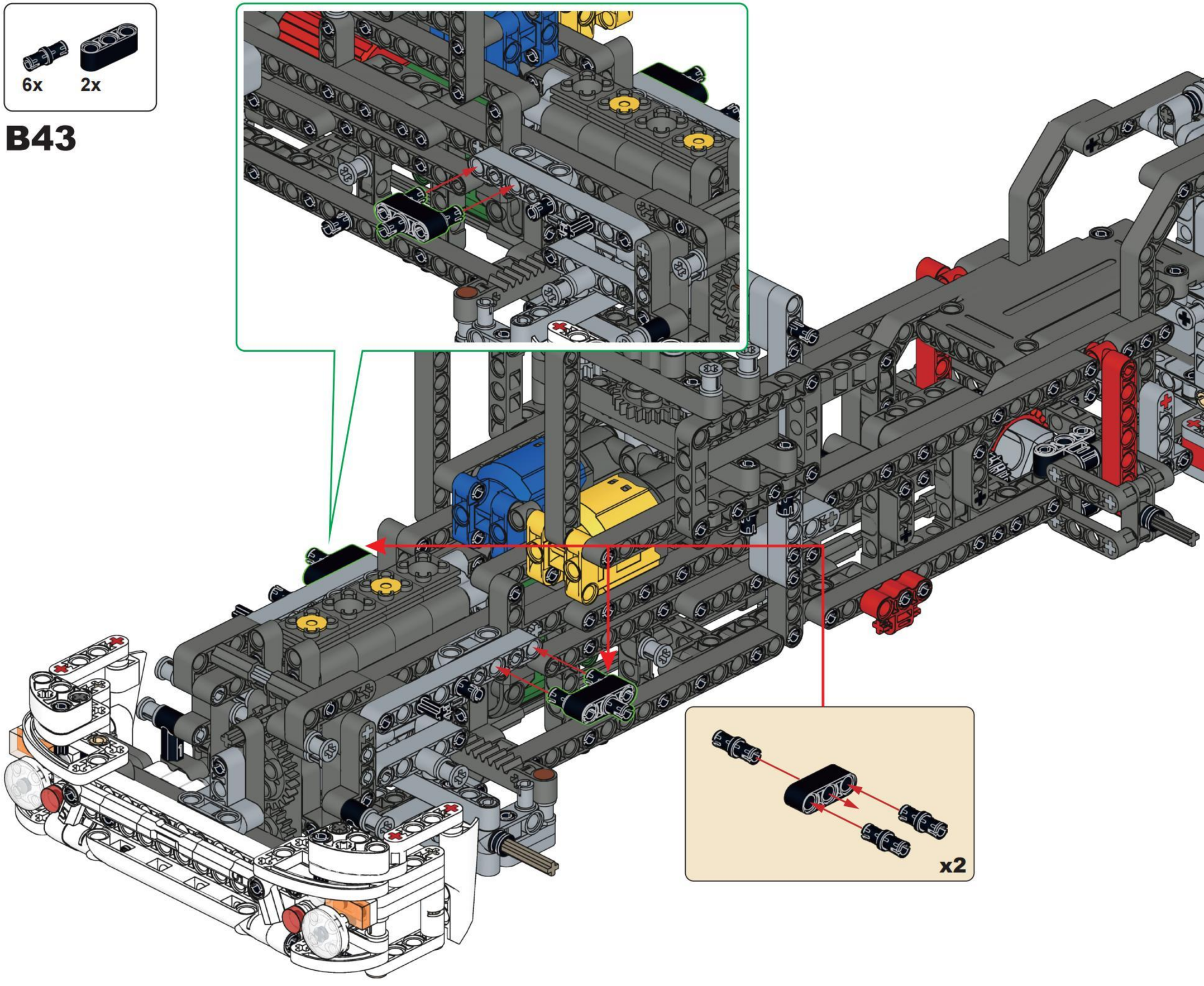

# B44

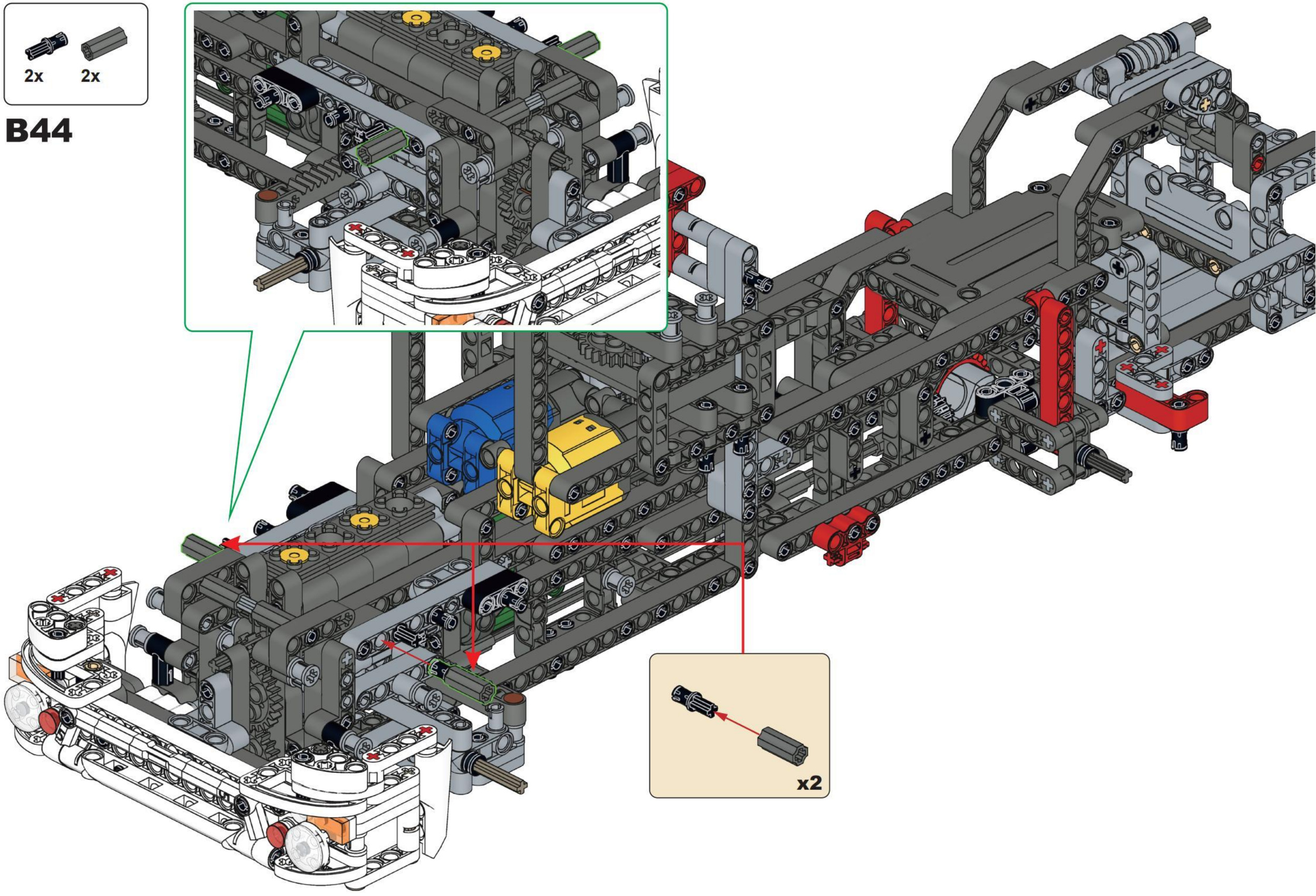

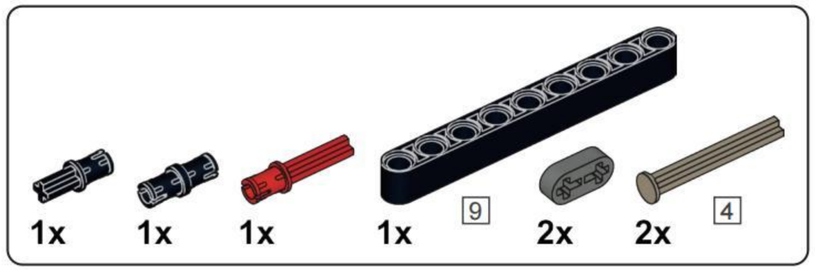


## B45

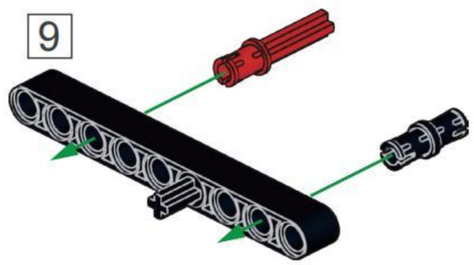


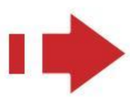

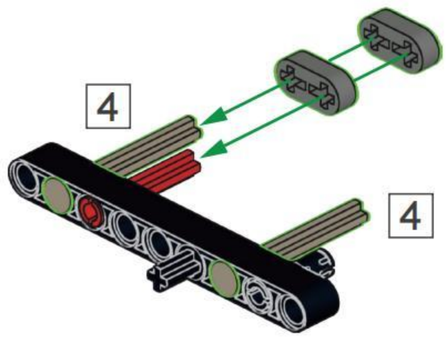


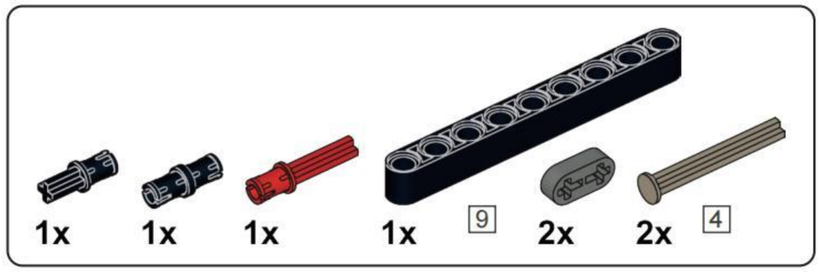


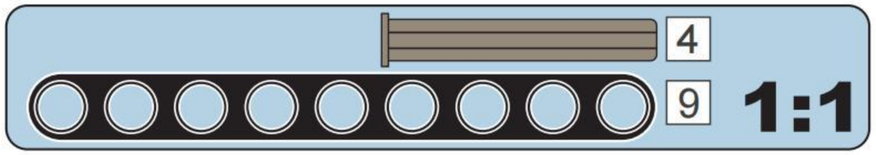


## B46

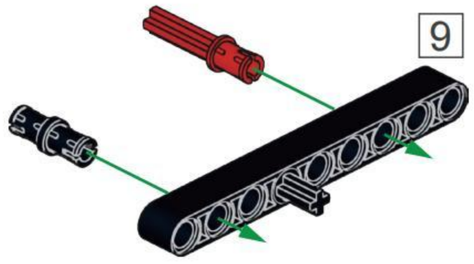


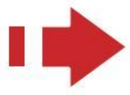

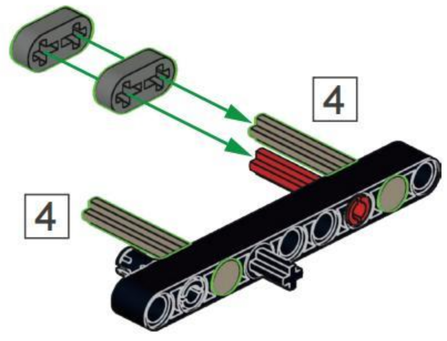

# B47

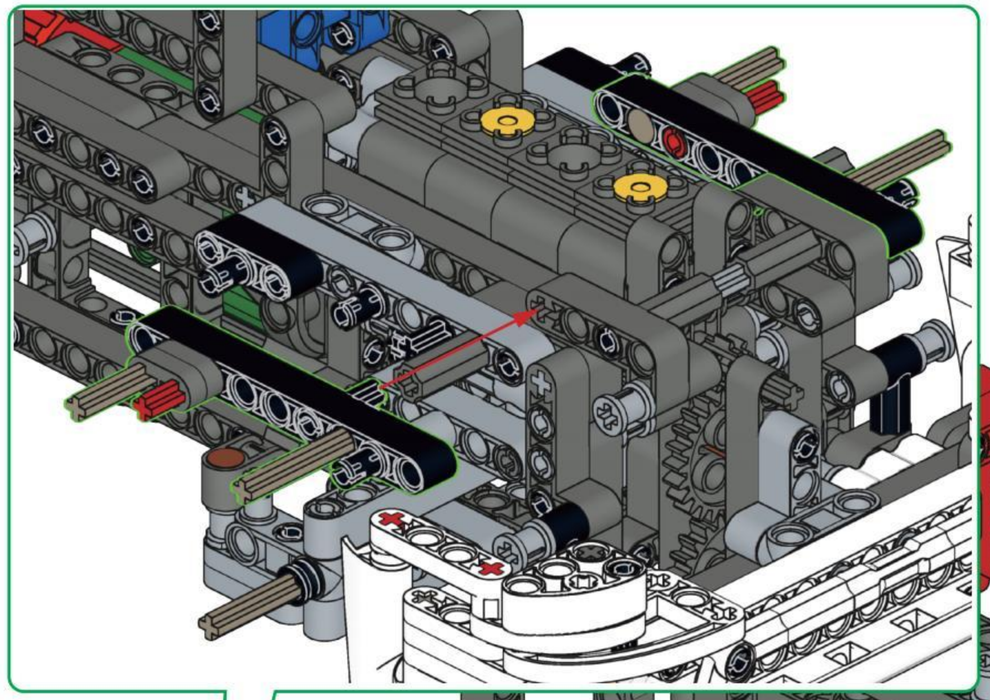

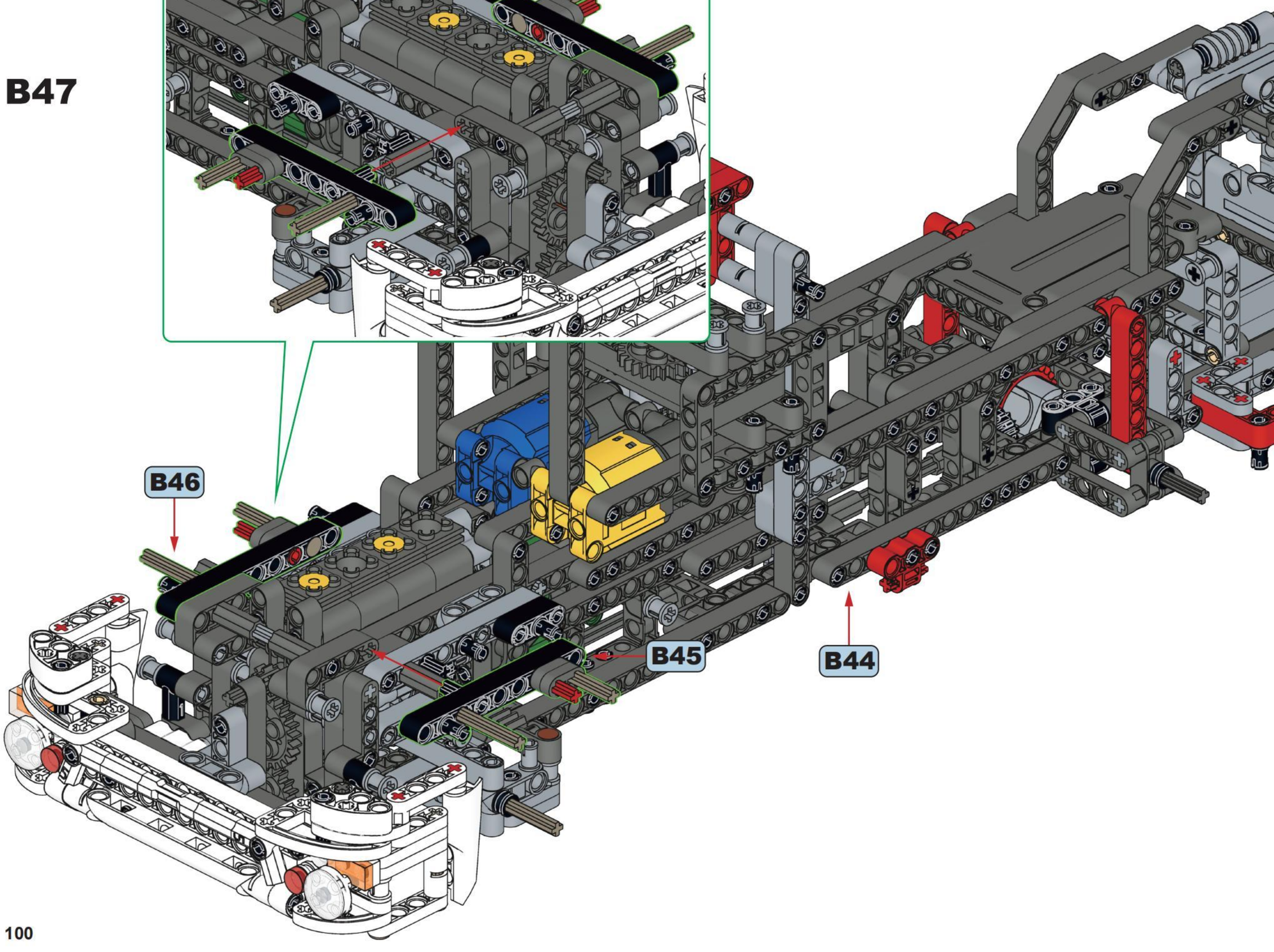

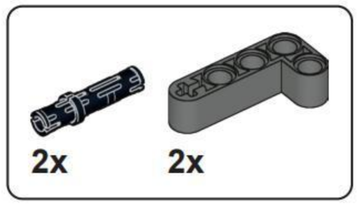


# B48

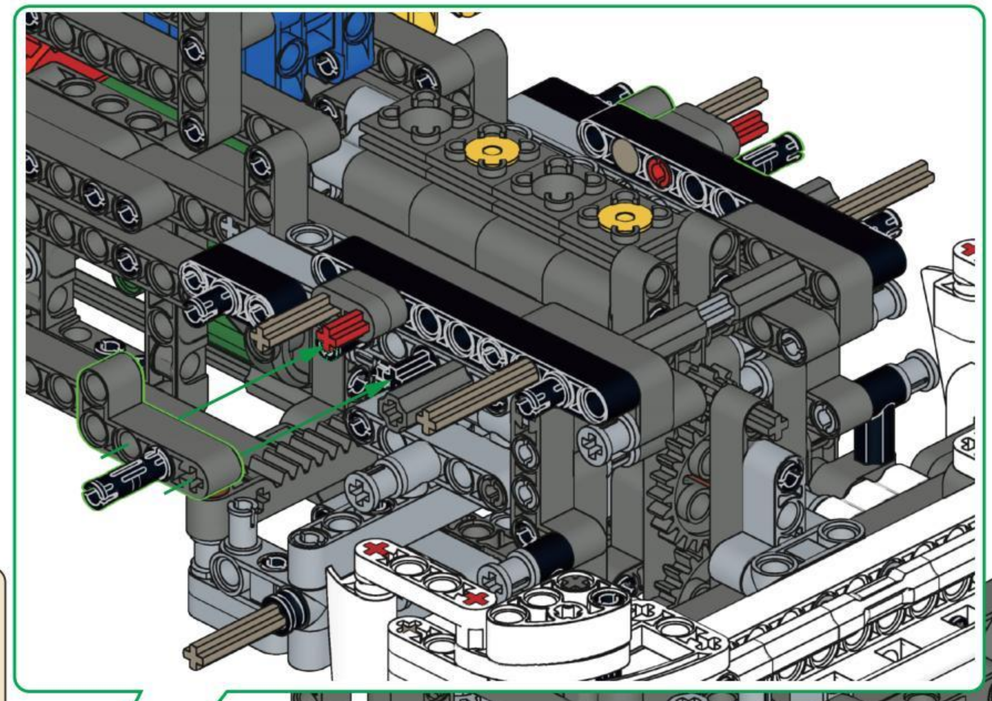

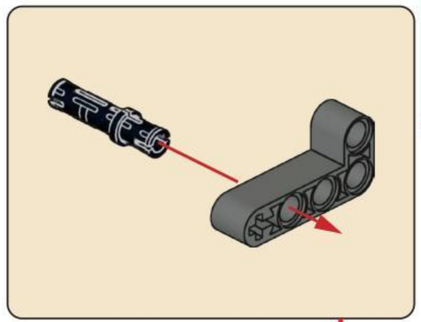



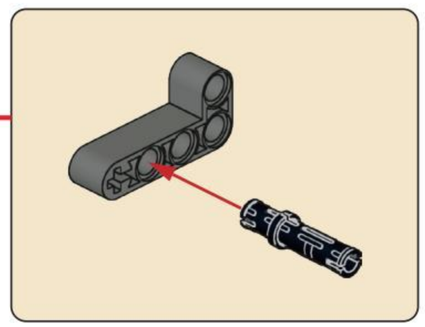

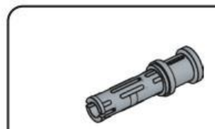


**B49**

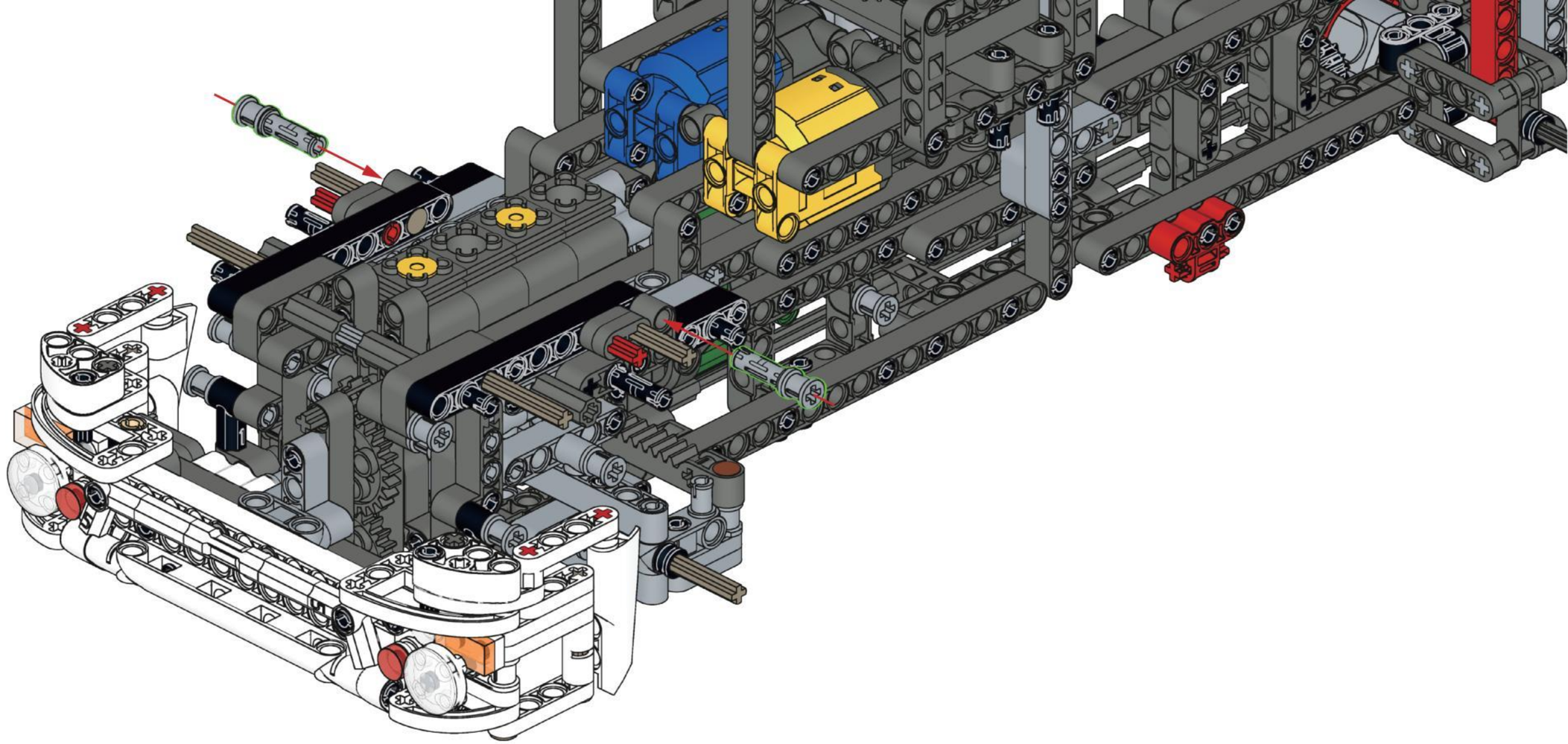

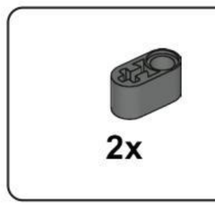


**B50**

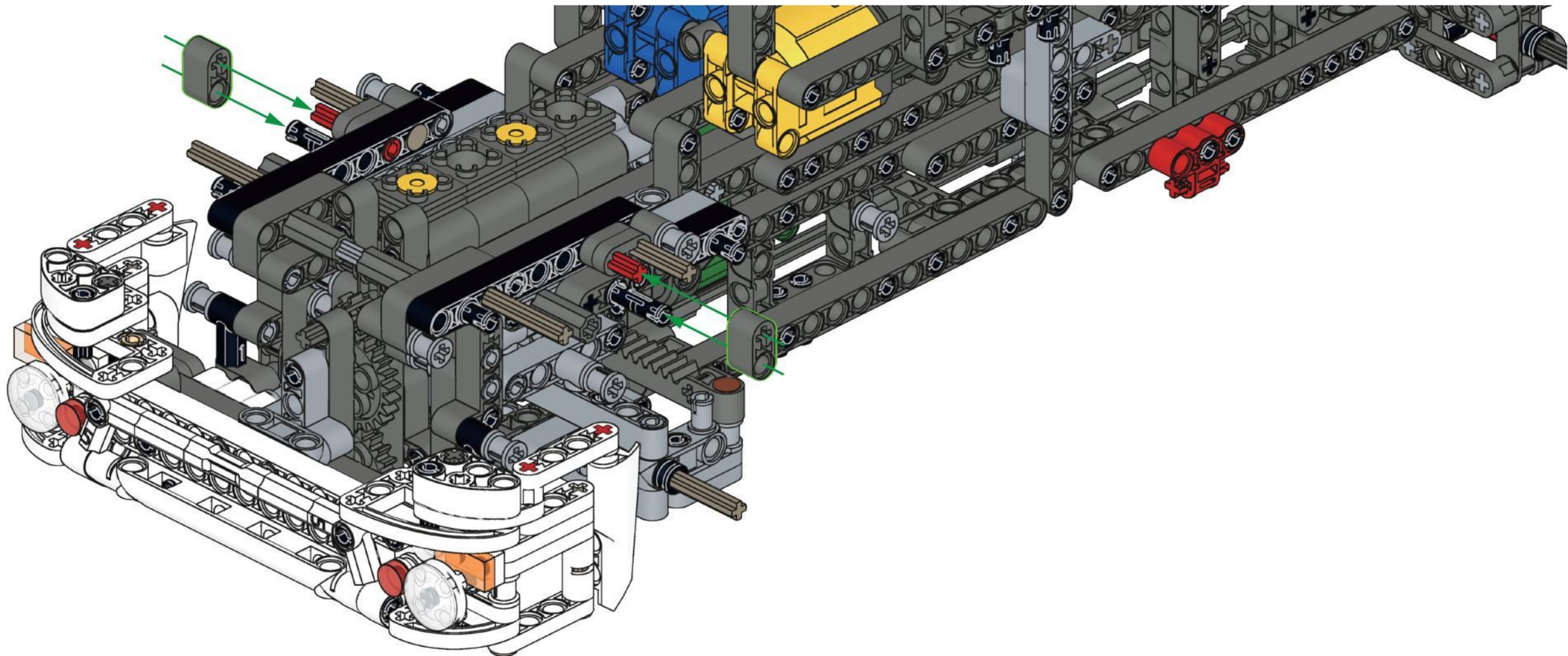

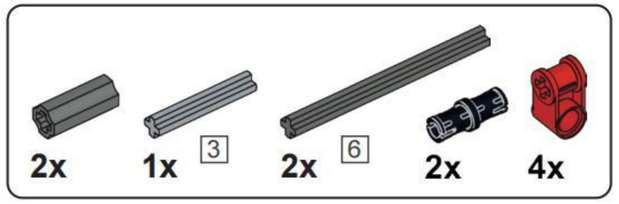


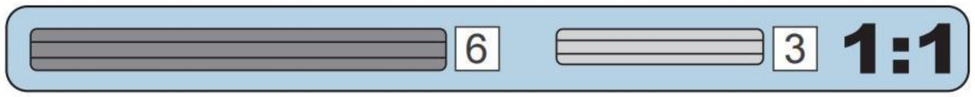


## B51

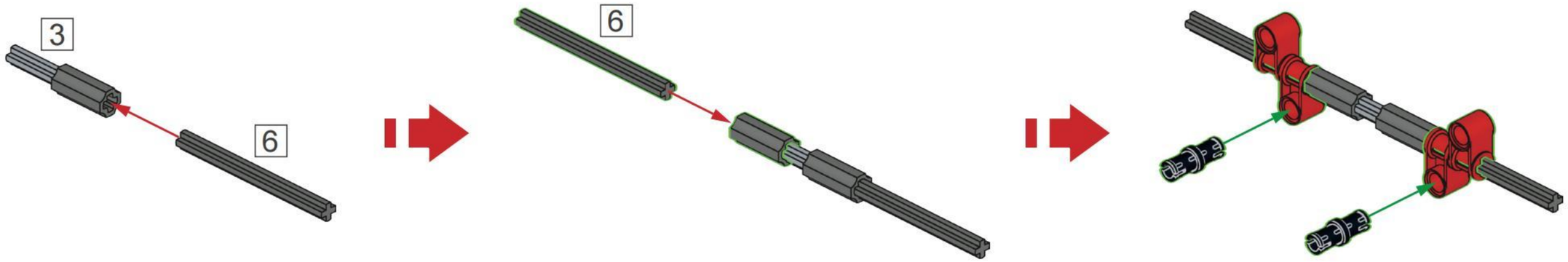


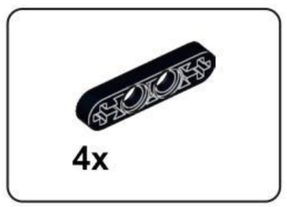


## B52

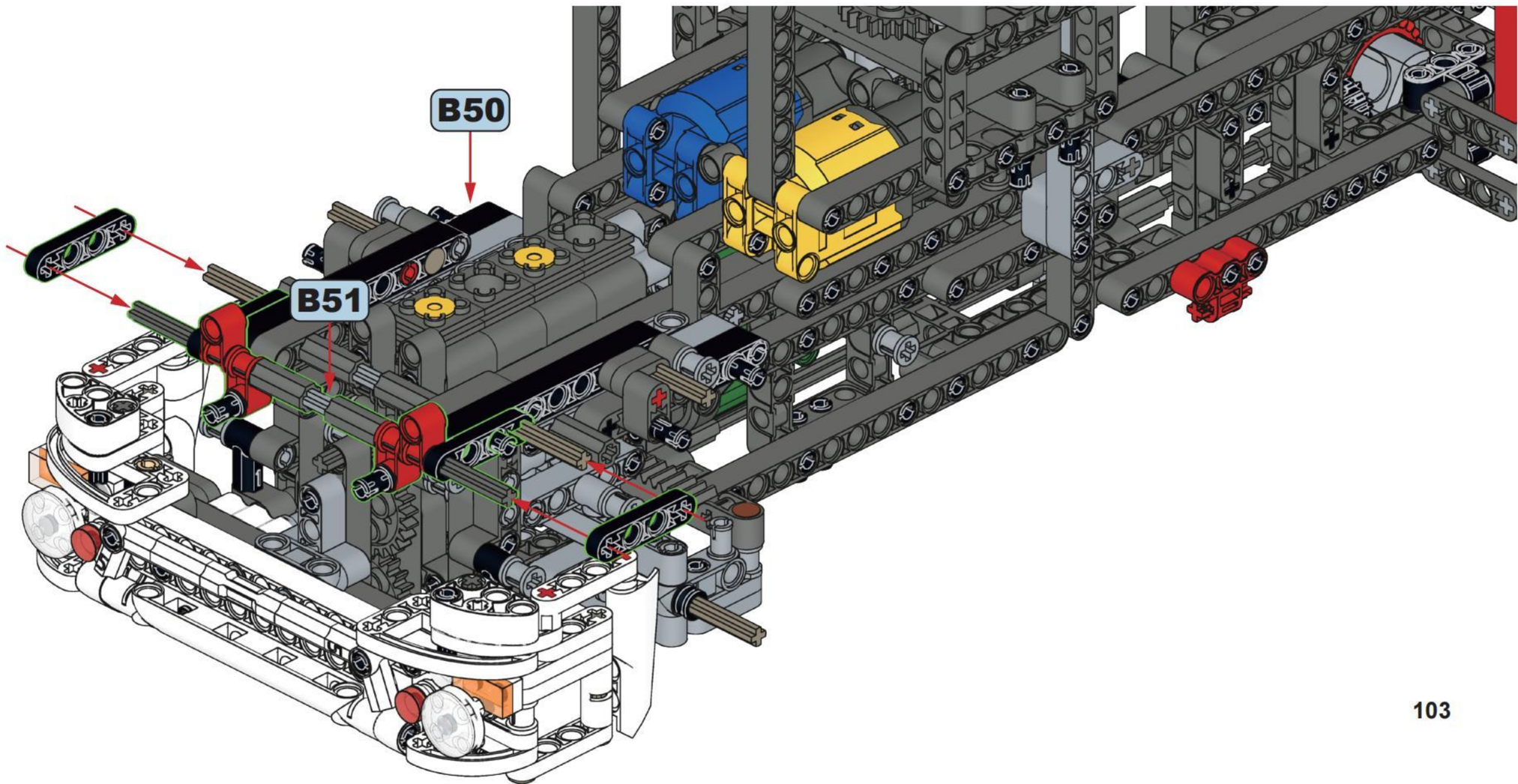

# B53

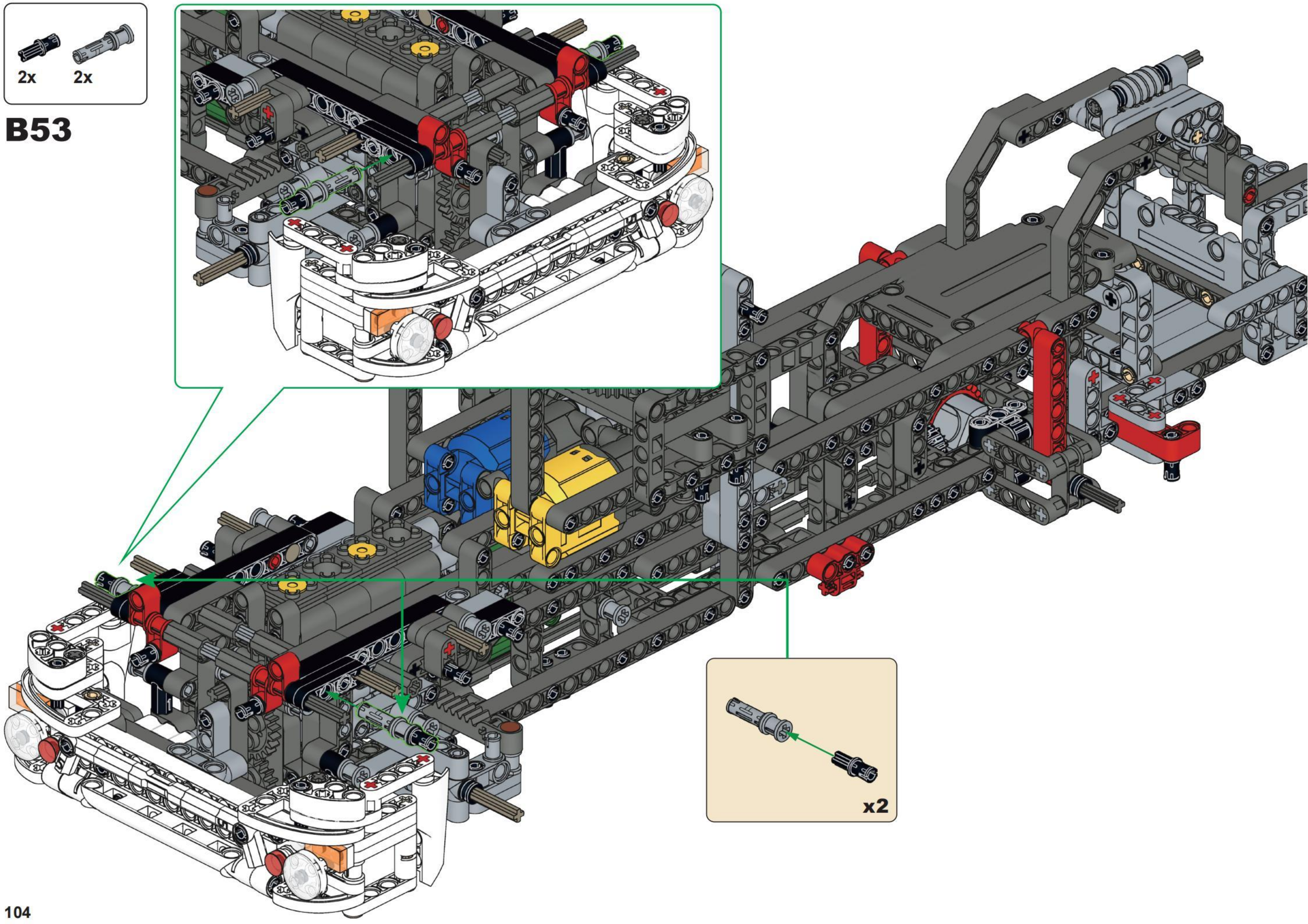

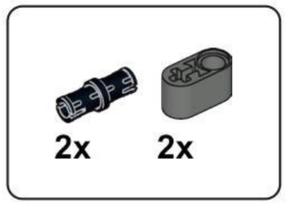


## B54

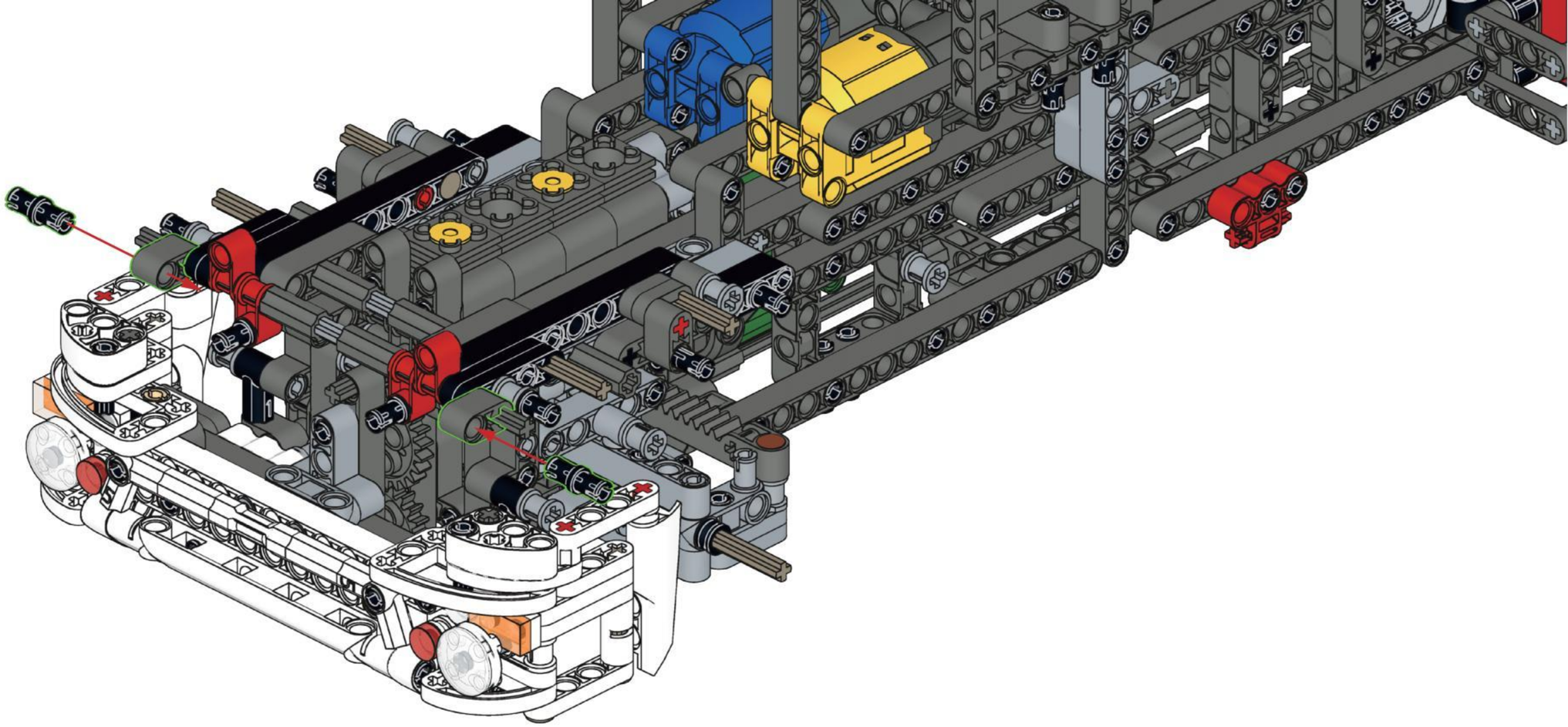

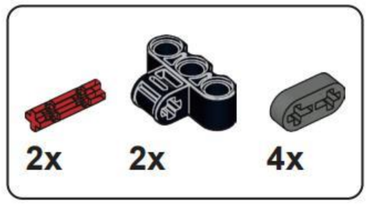


## B55

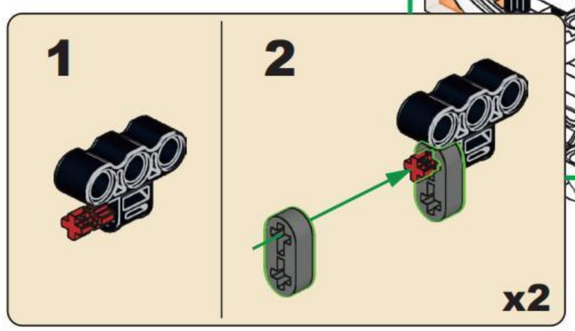

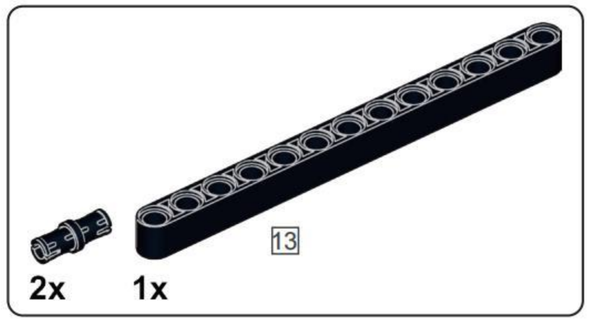


## B56

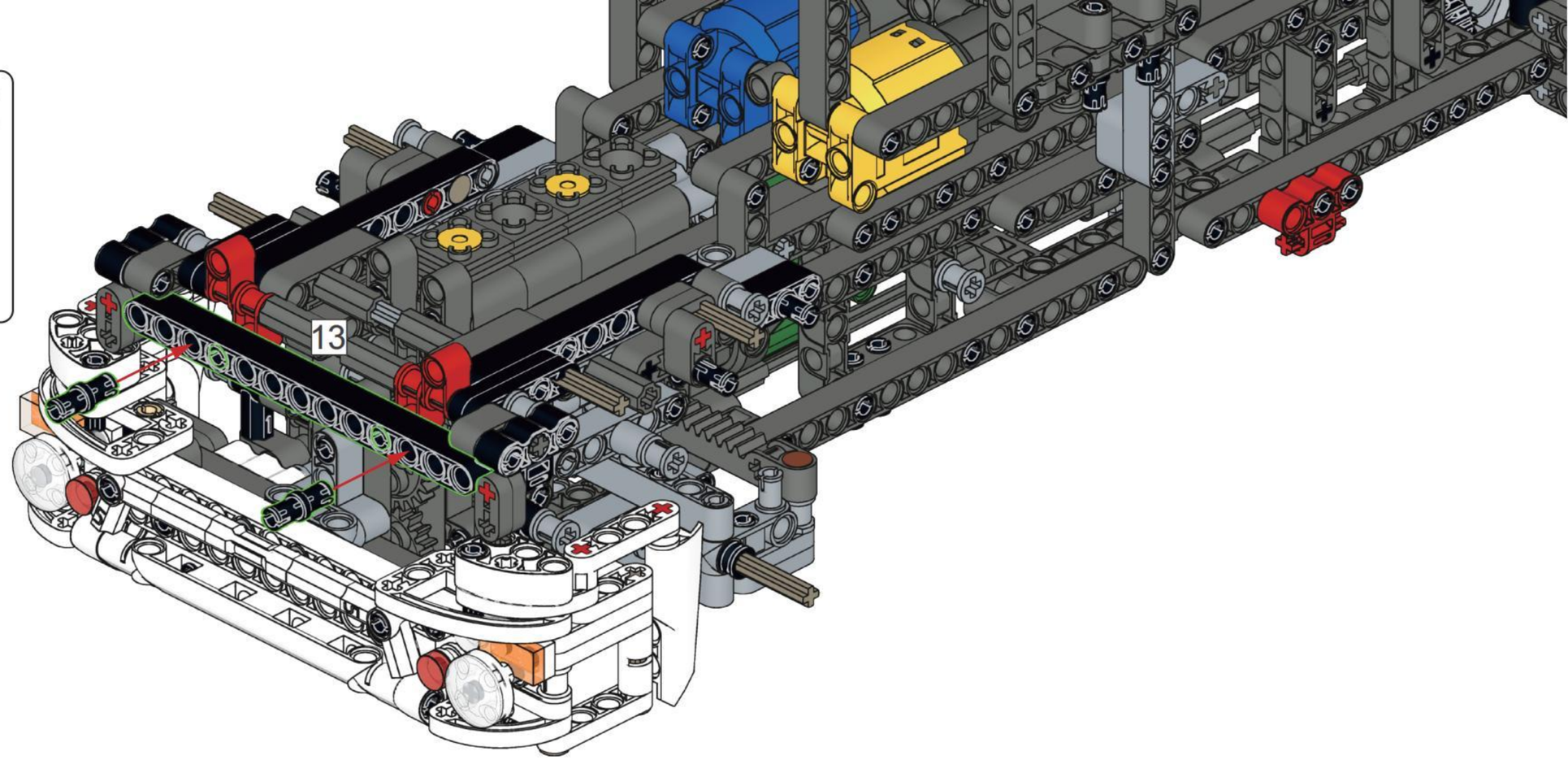


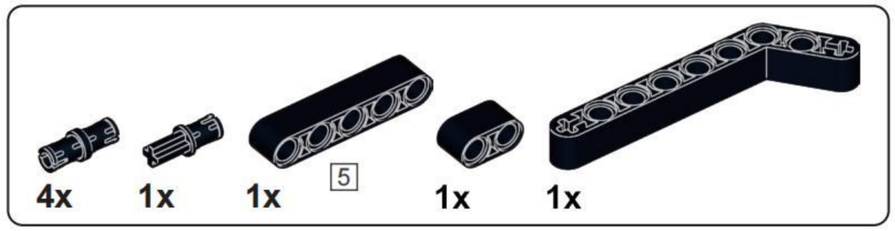


## B57

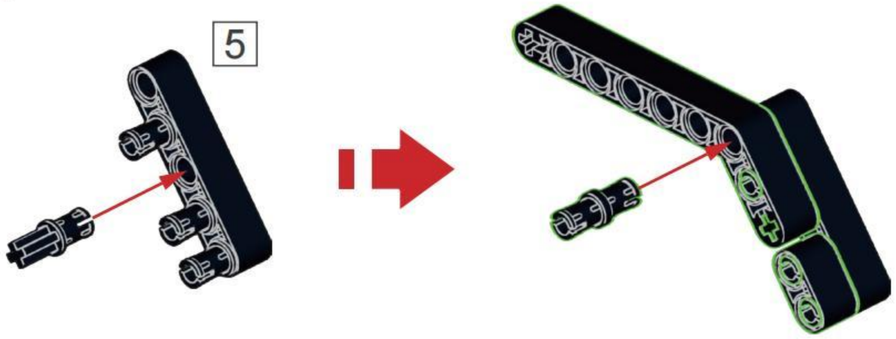


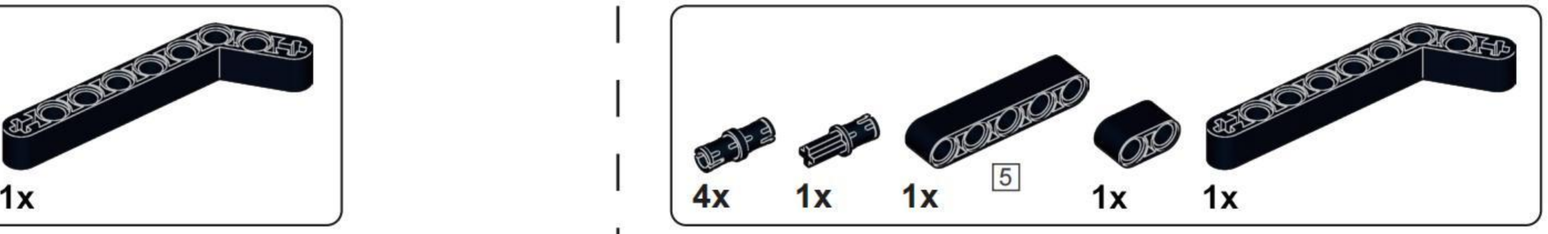


## B58

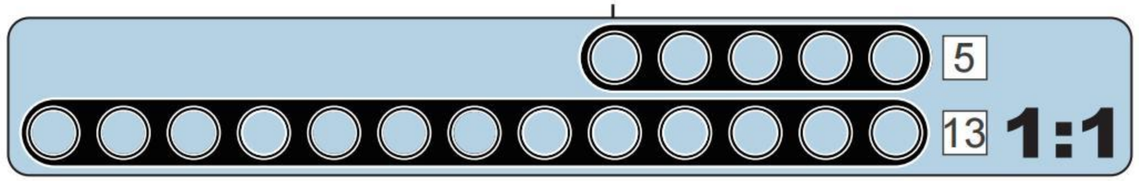

# B59

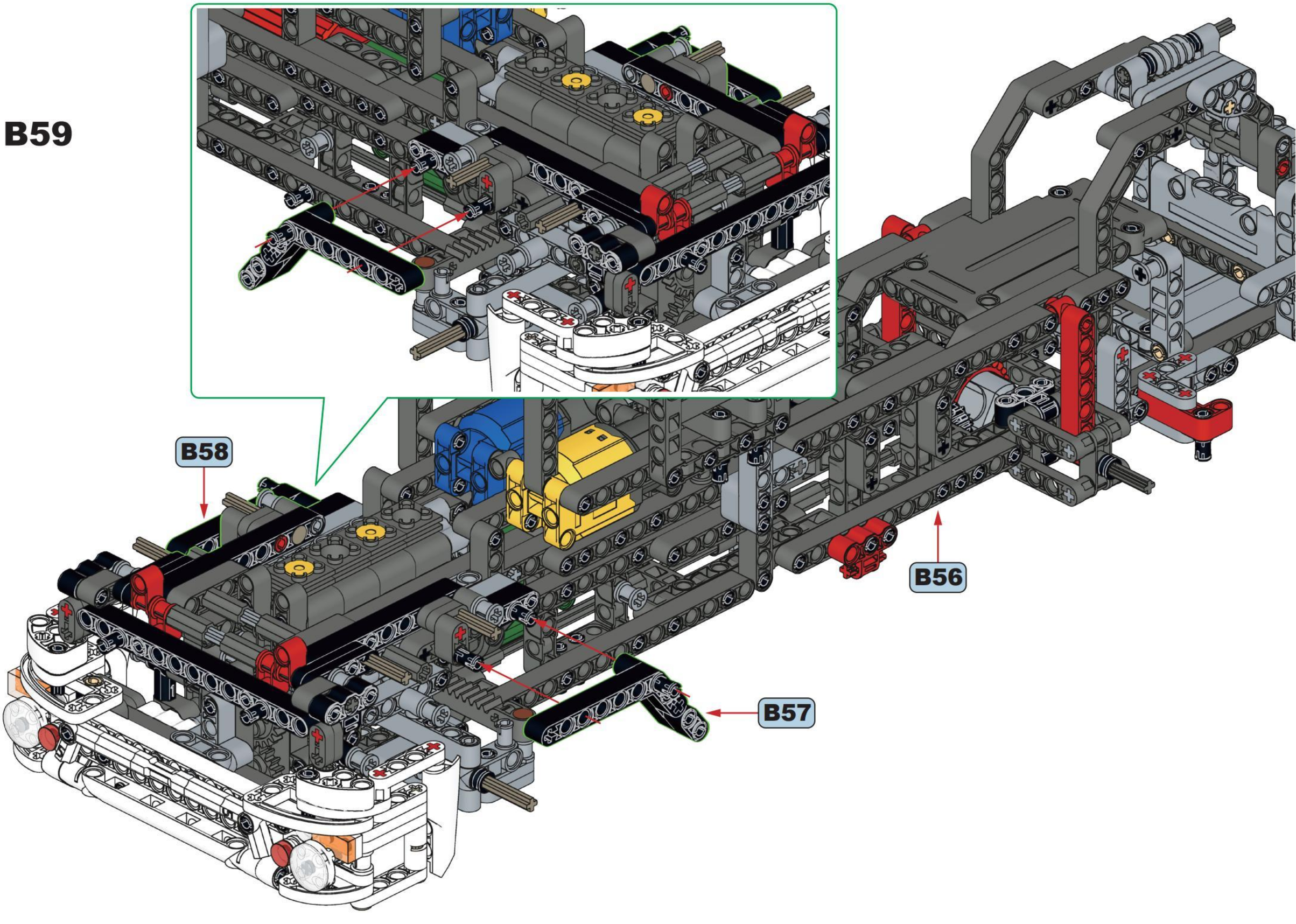

**B60**

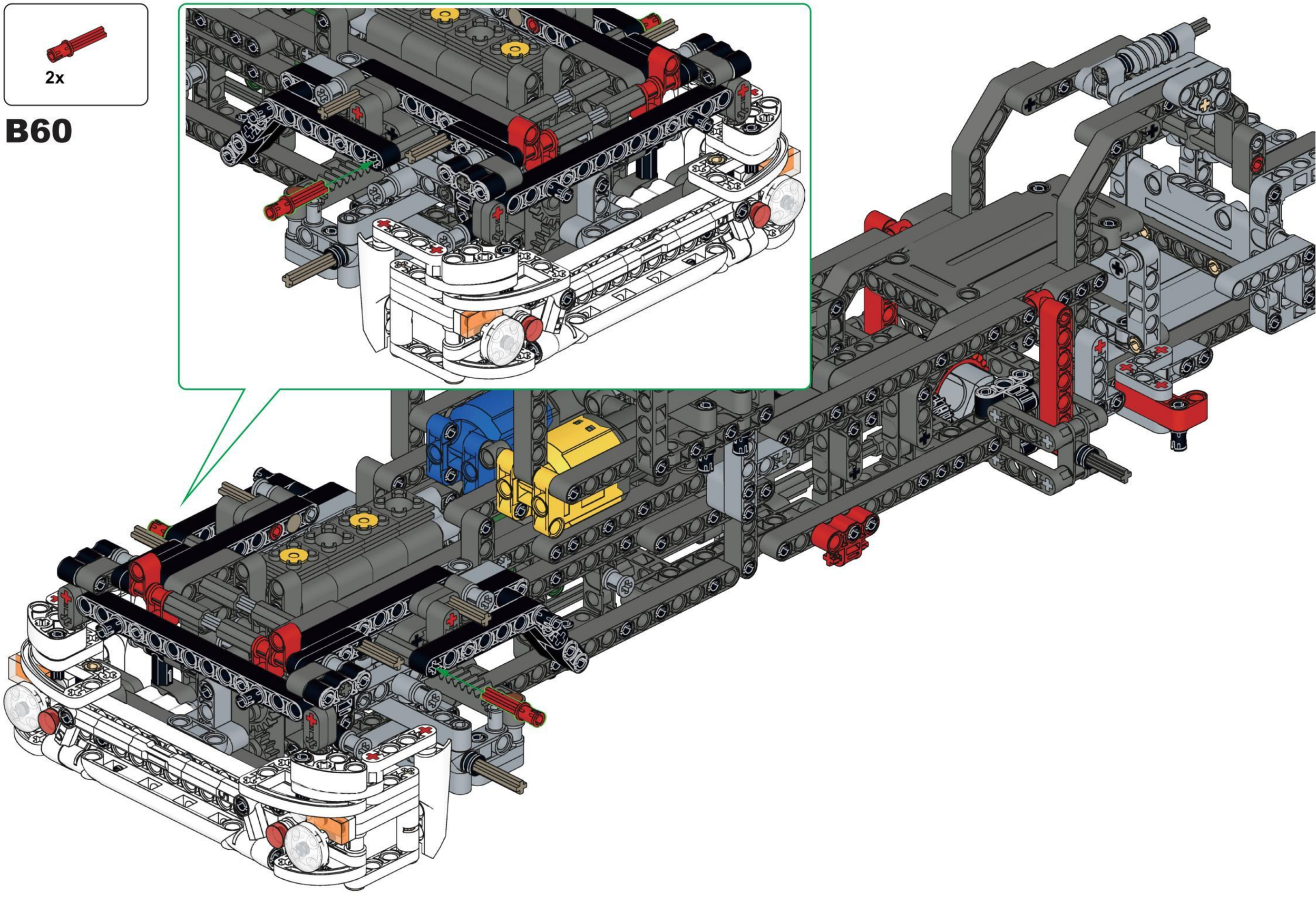

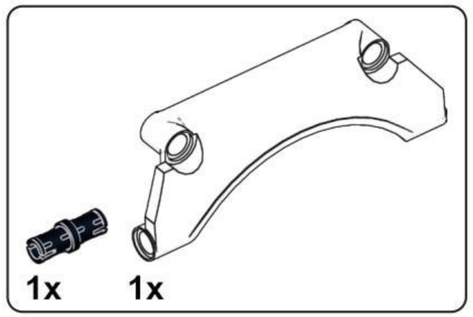


## B61

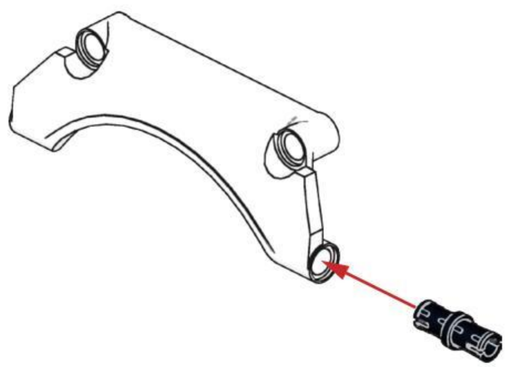

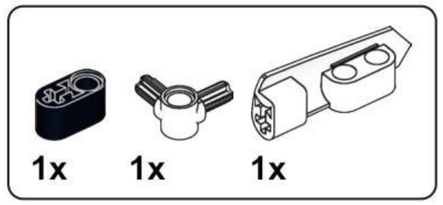


## B62

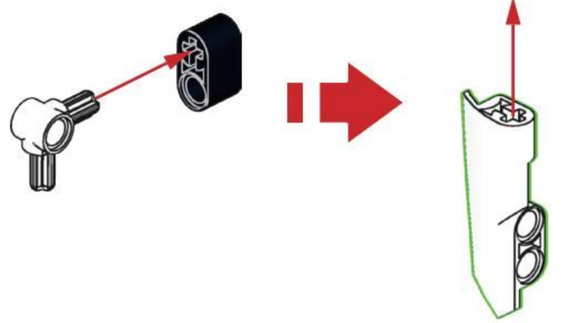

## B63

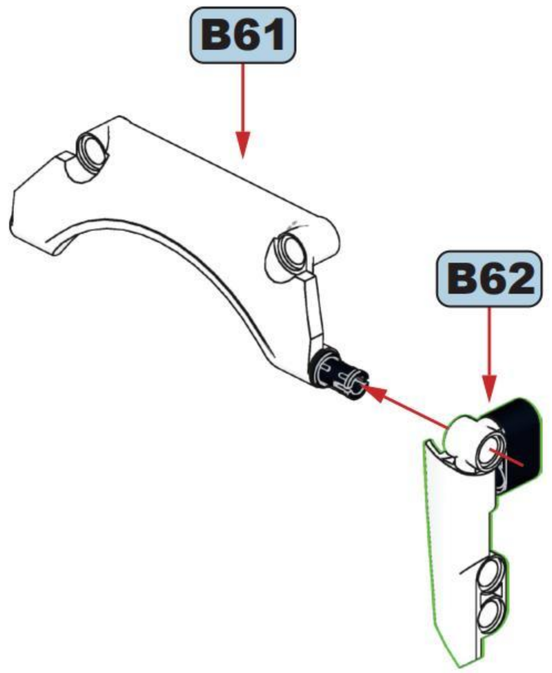


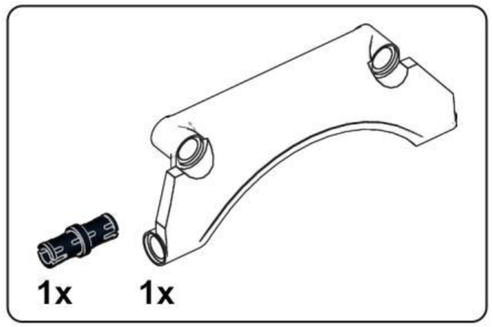


## B64

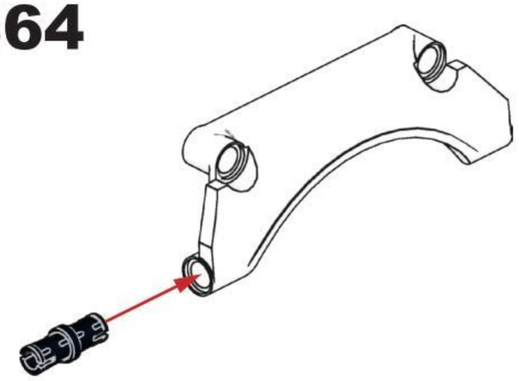

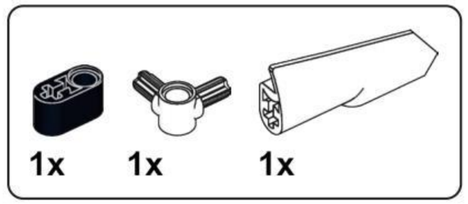


## B65

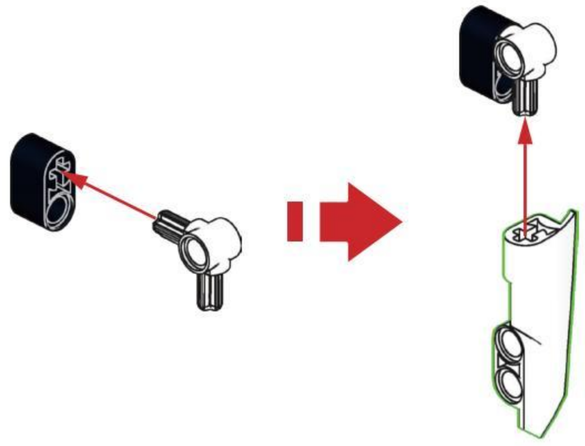

## B66

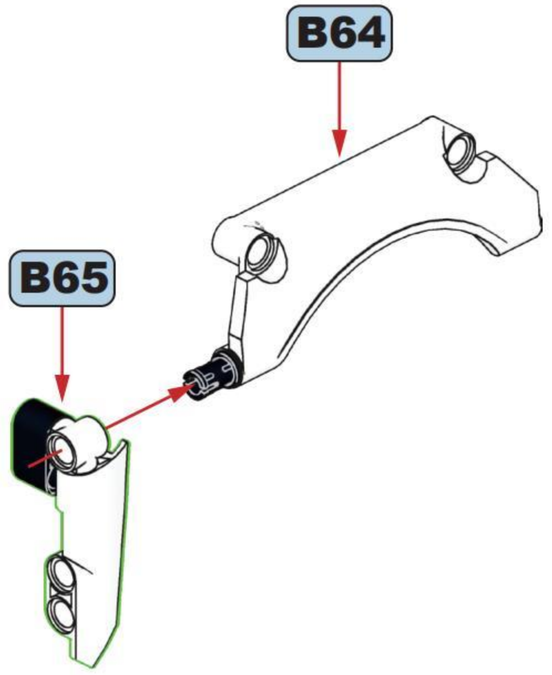

# B67

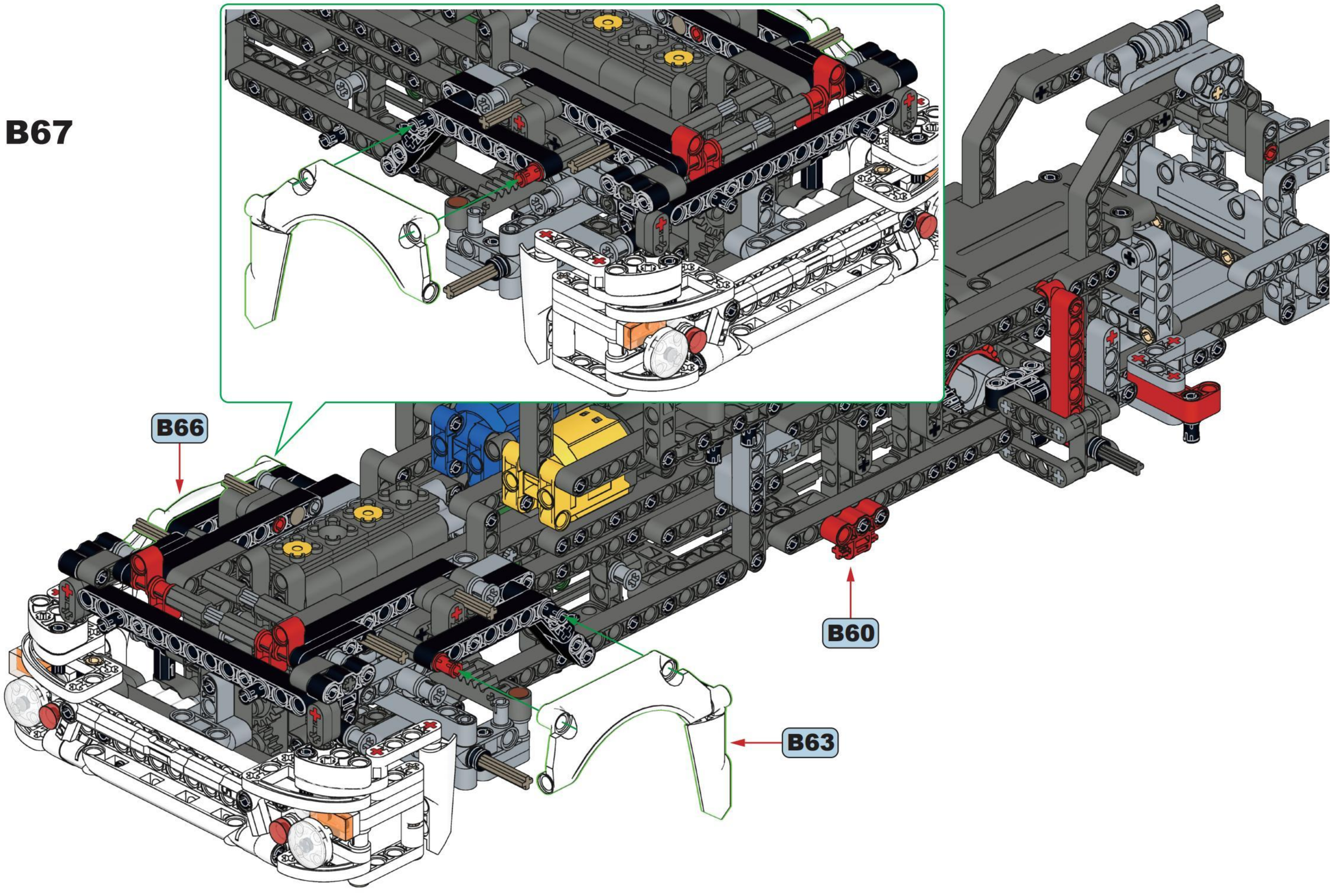

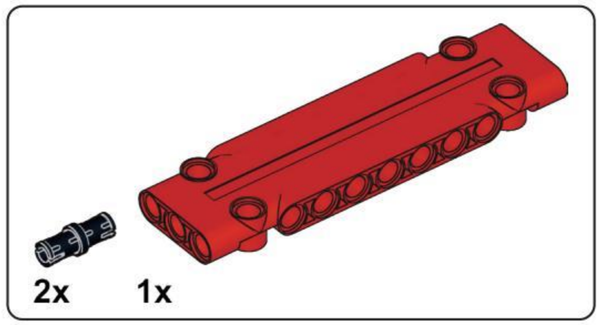


## B68

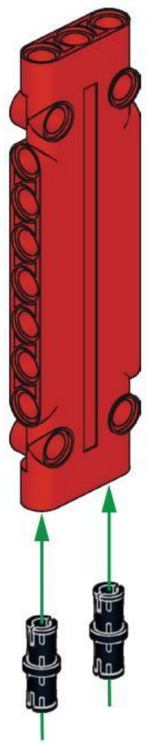

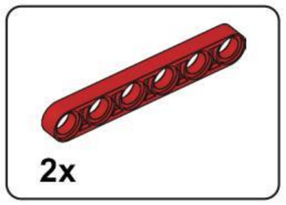


## B69

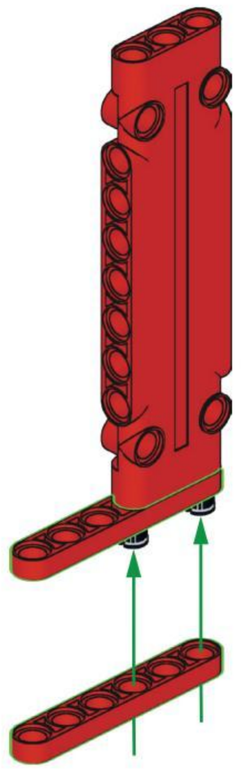

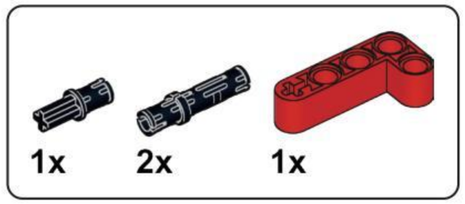


## B70

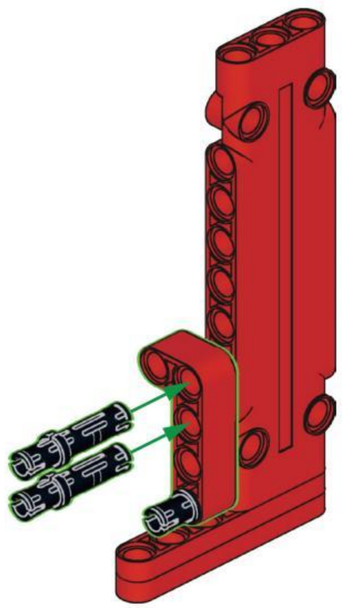

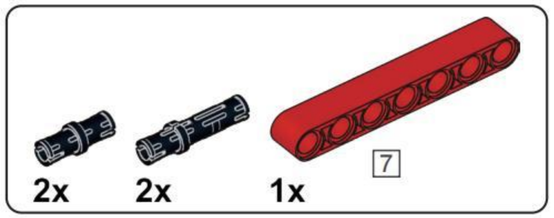


## B71

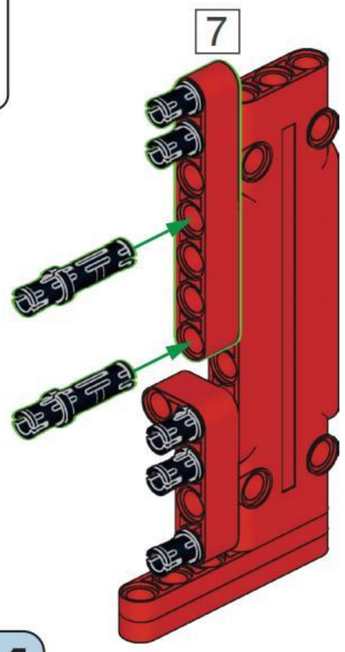


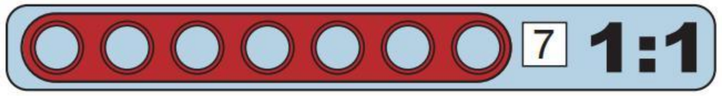

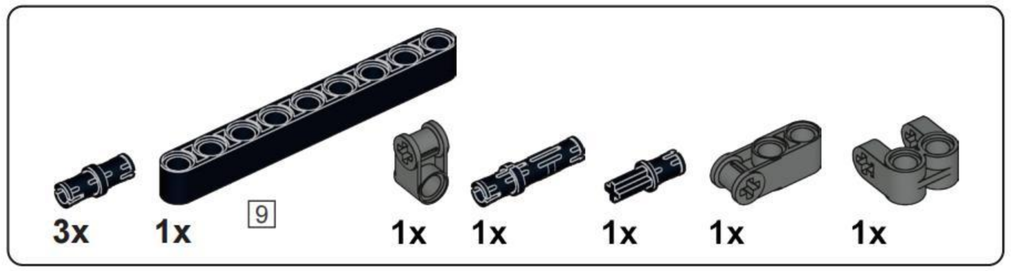


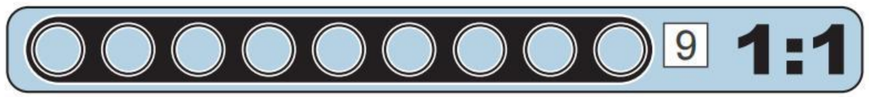


## B72

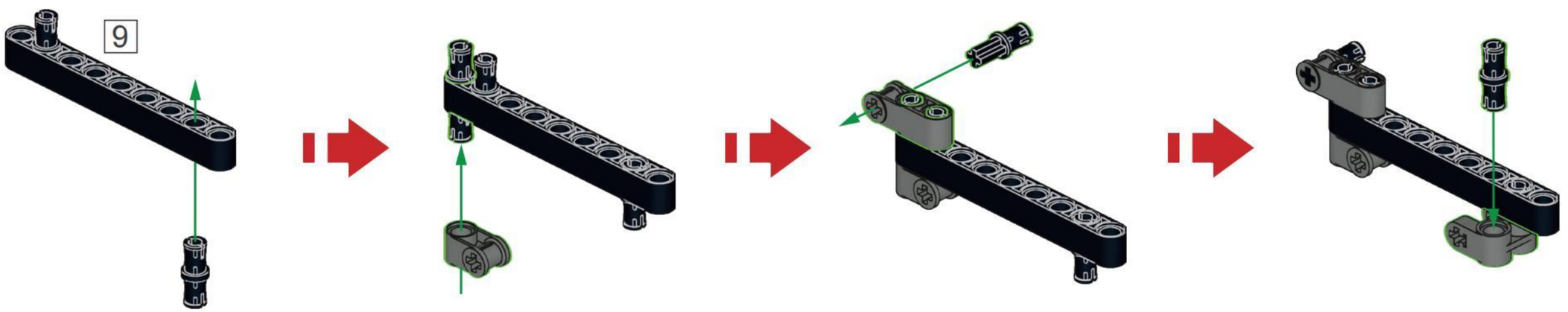


## B73

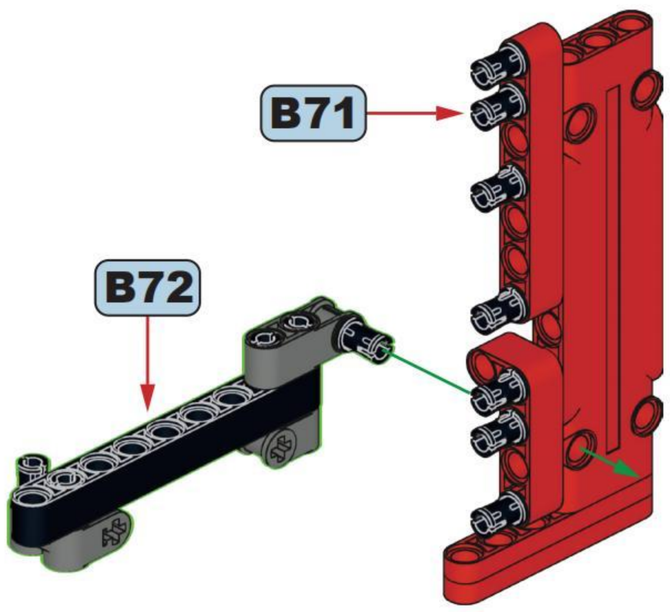

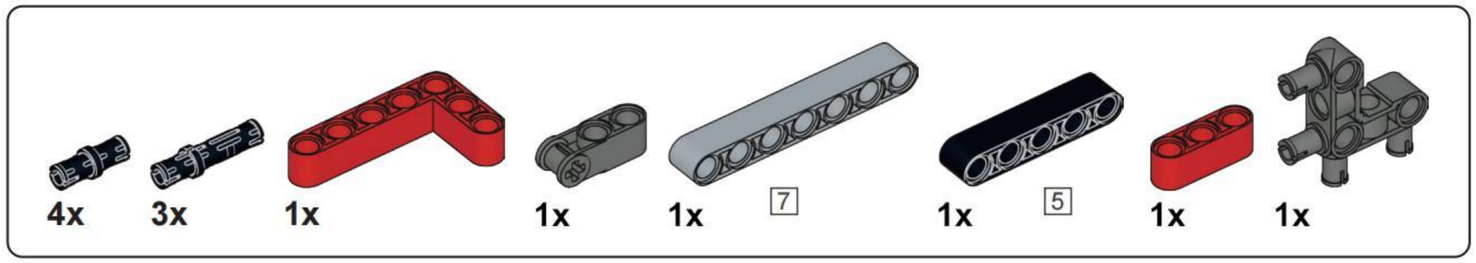


## B74

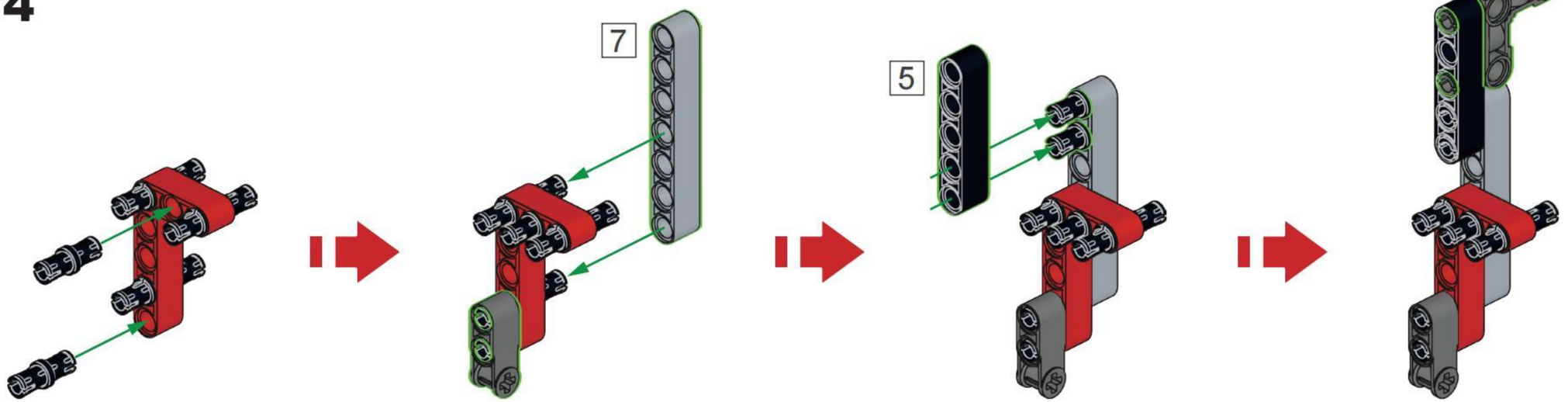


## B75

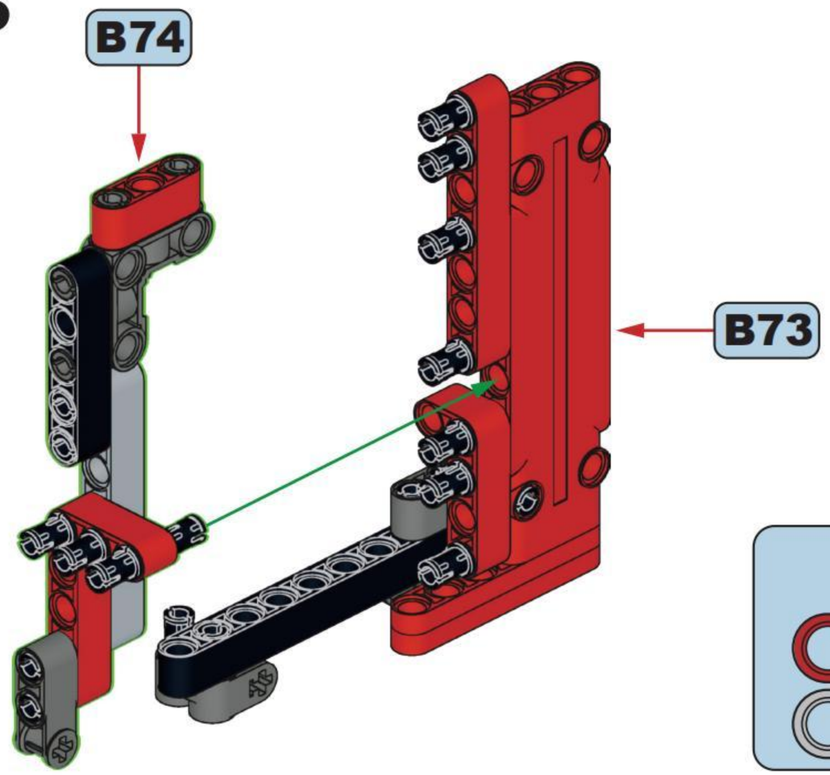


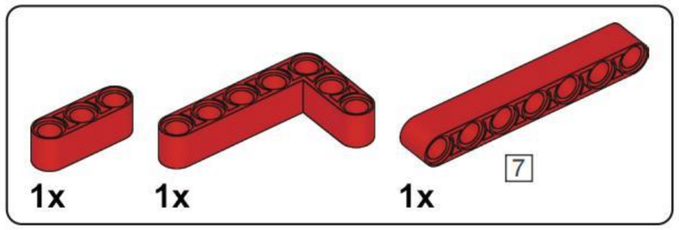


## B76

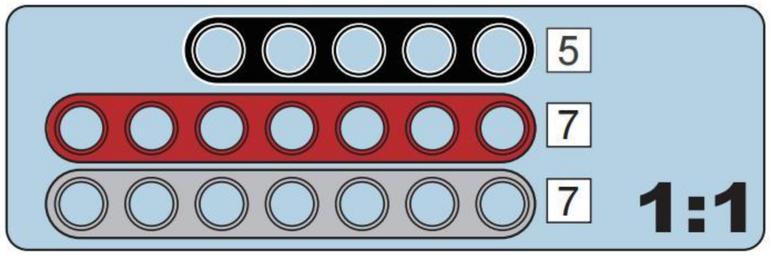


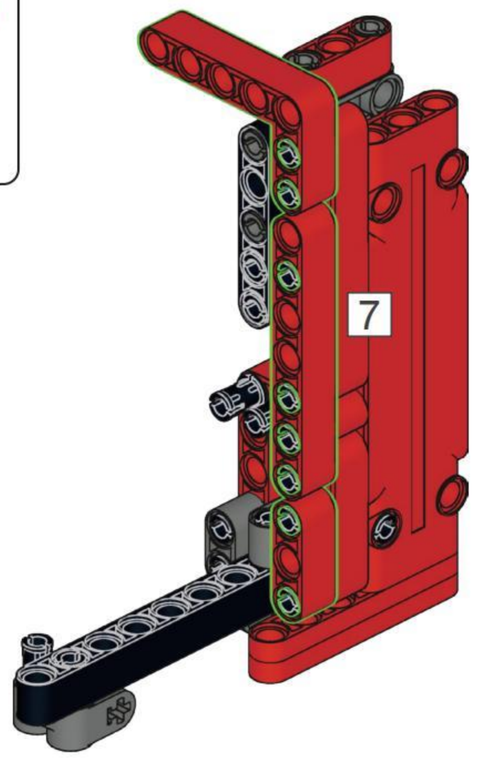

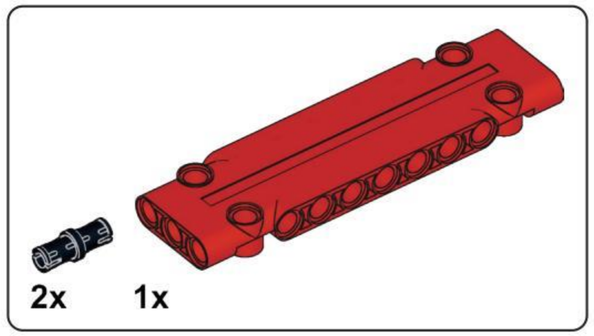


## B77

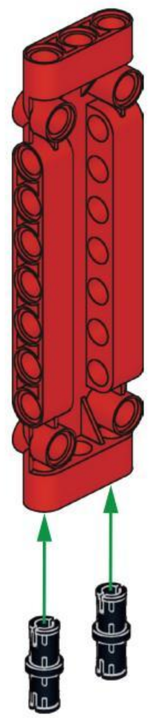

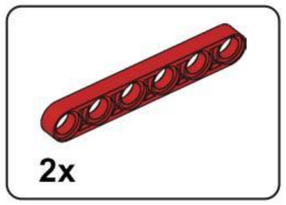


## B78

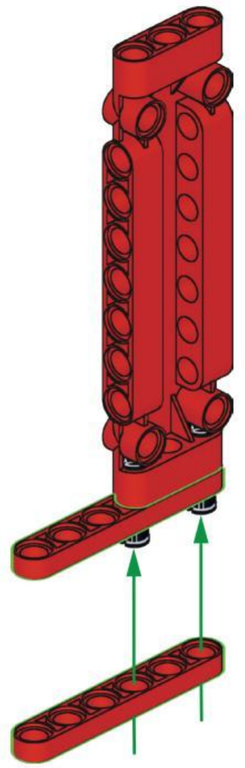

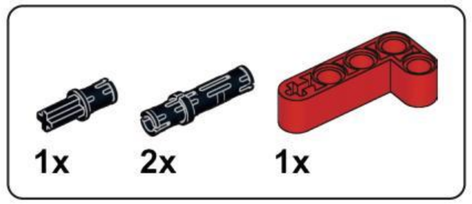


## B79

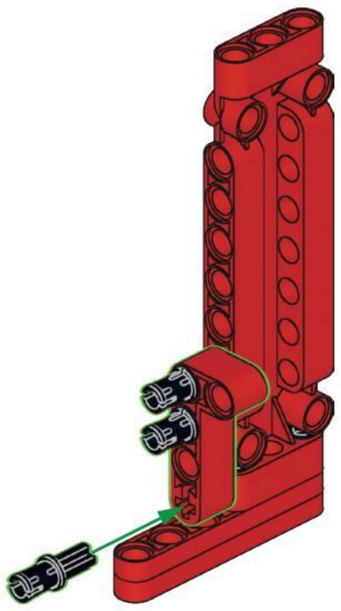

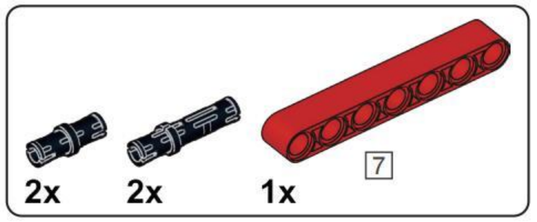


## B80

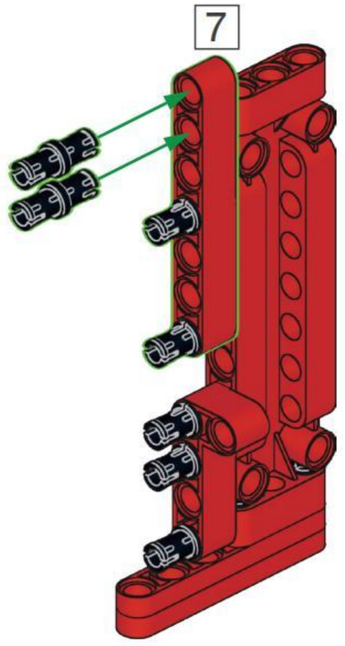


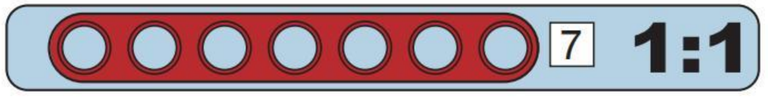

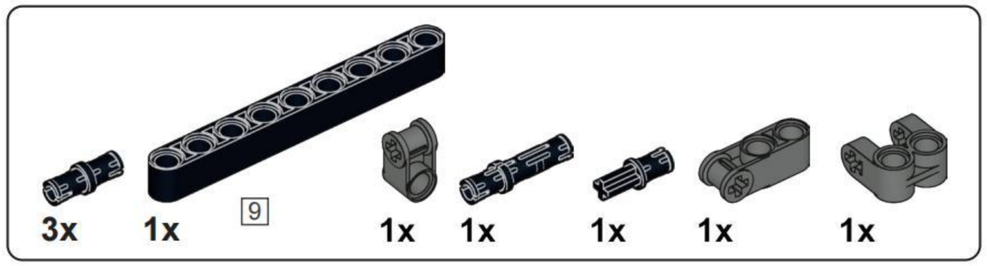


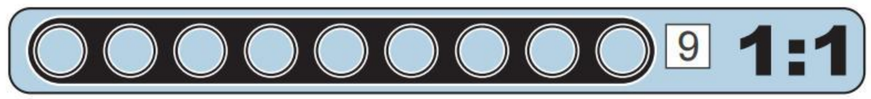


## B81

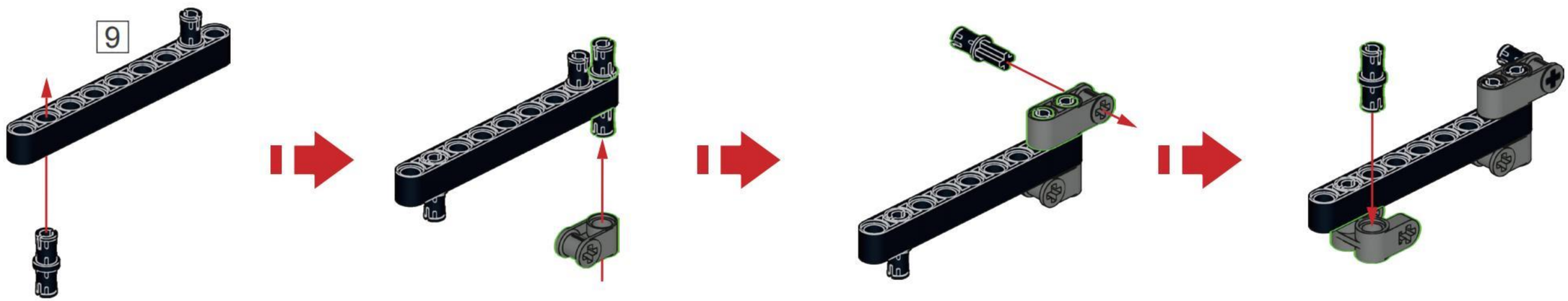


## B82

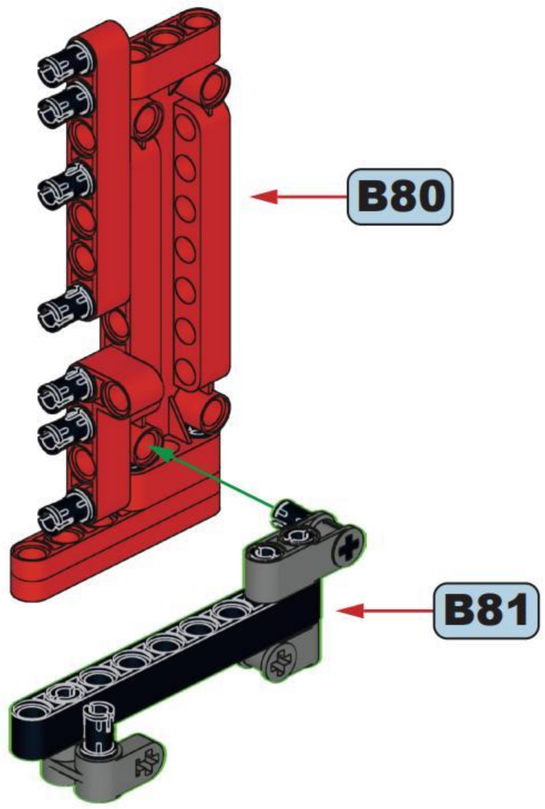

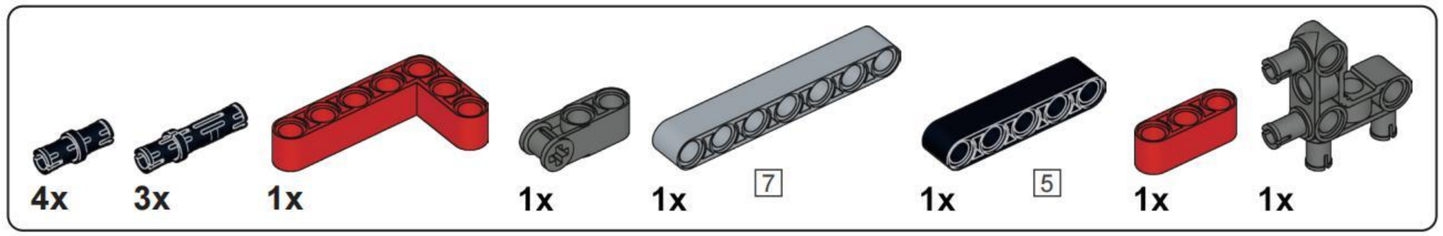


# B83

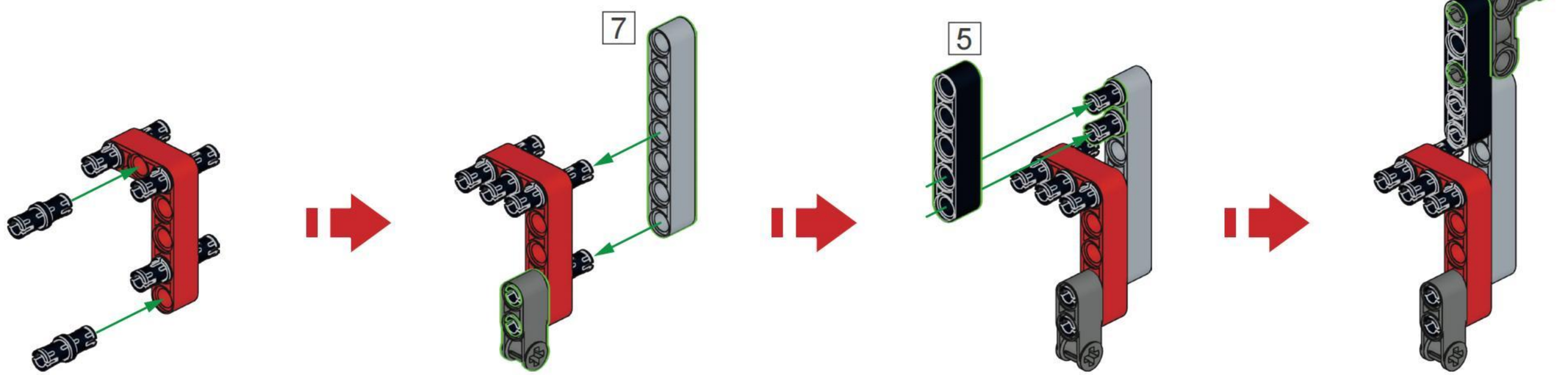


# B84

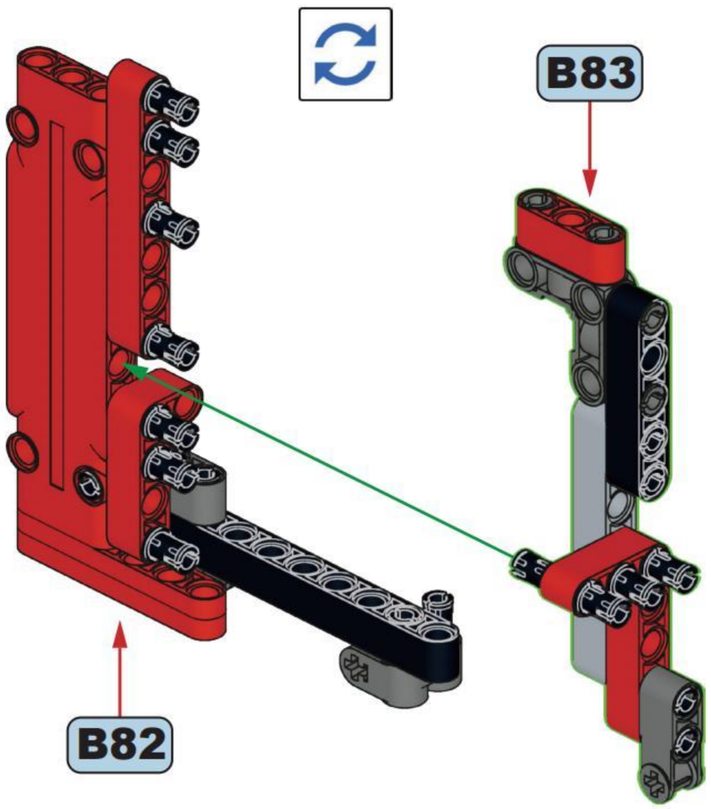


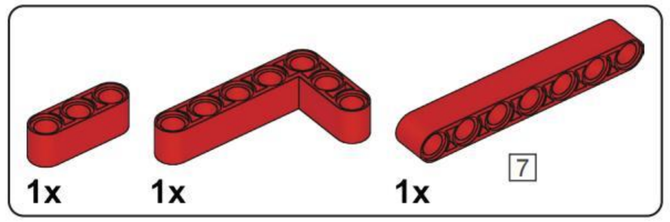


# B85

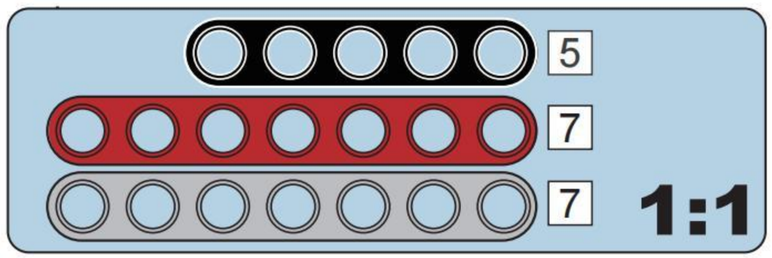


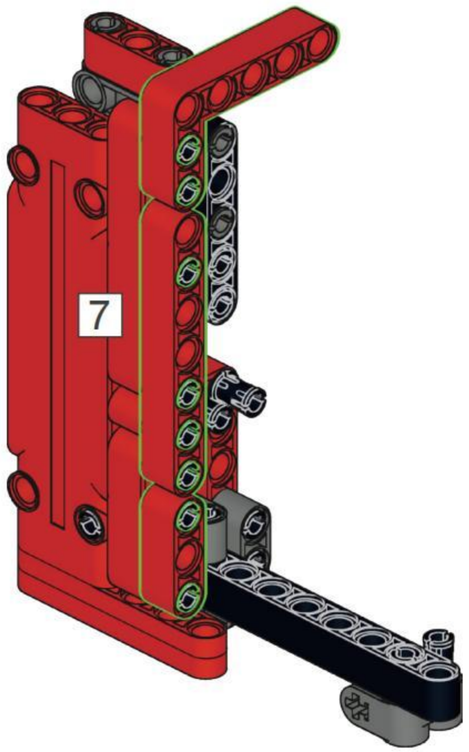

# B86

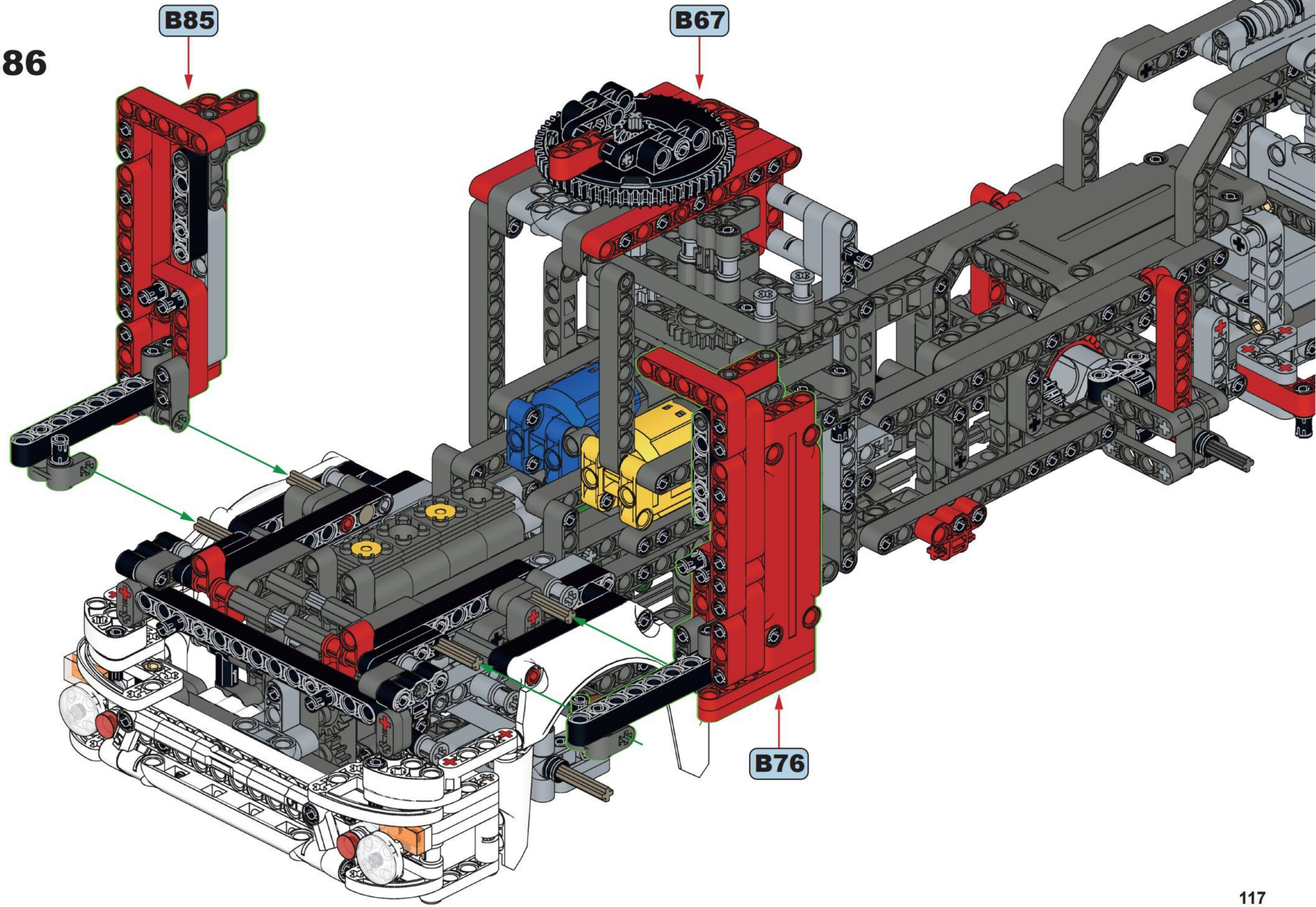

1x

# B87

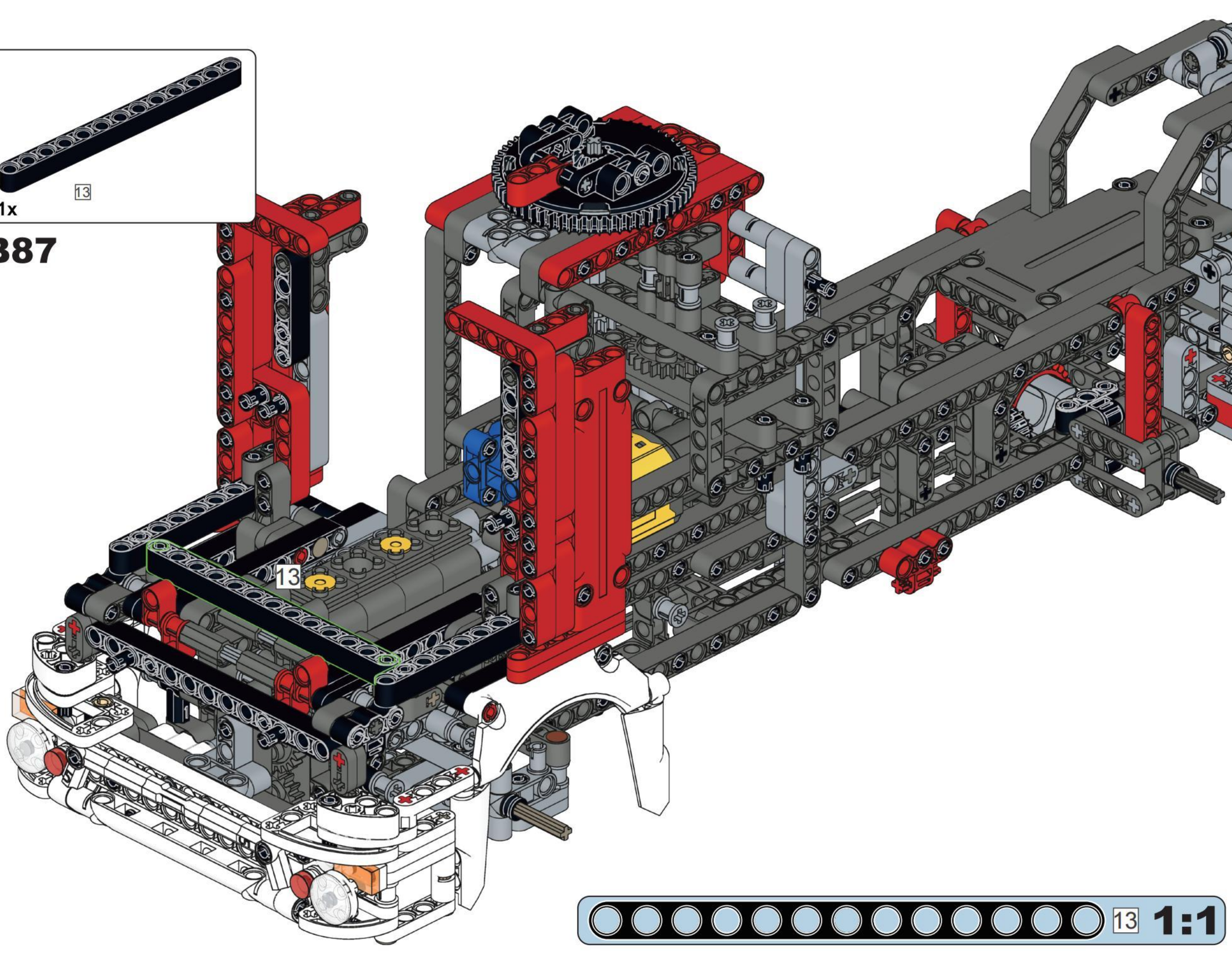

2x 1x

15

# B88

15

15 1:1

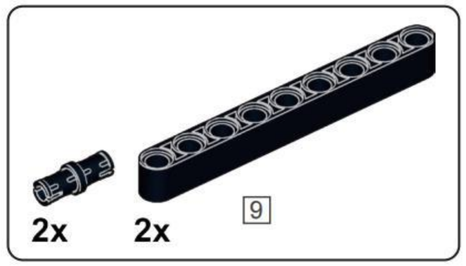


**B89**

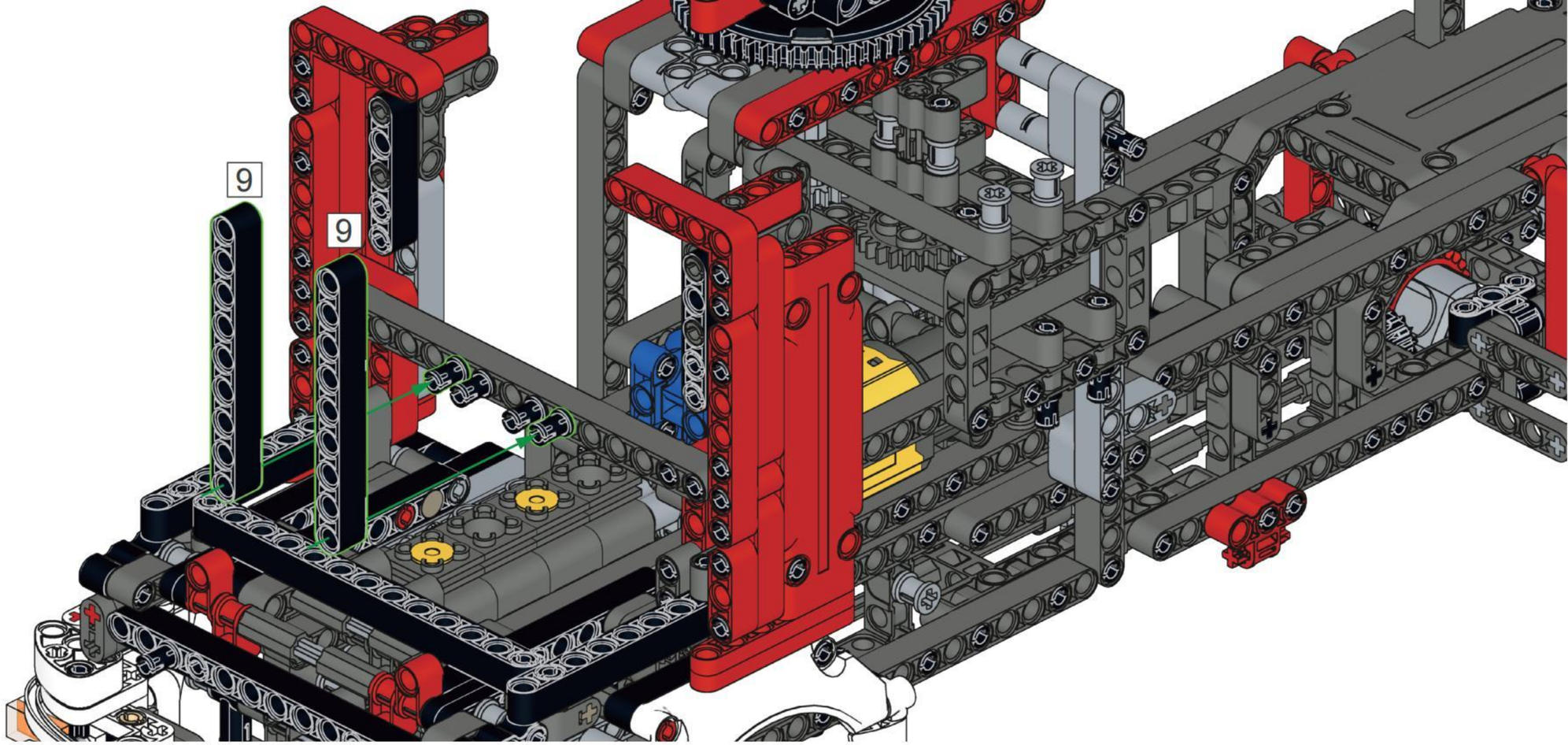


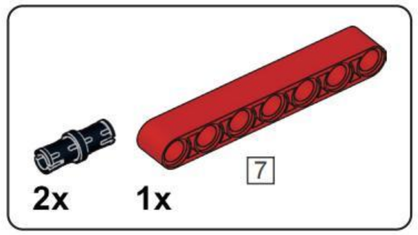


**B90**

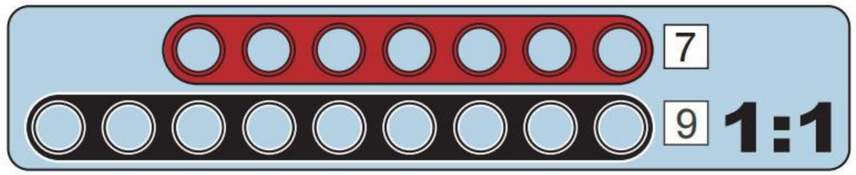


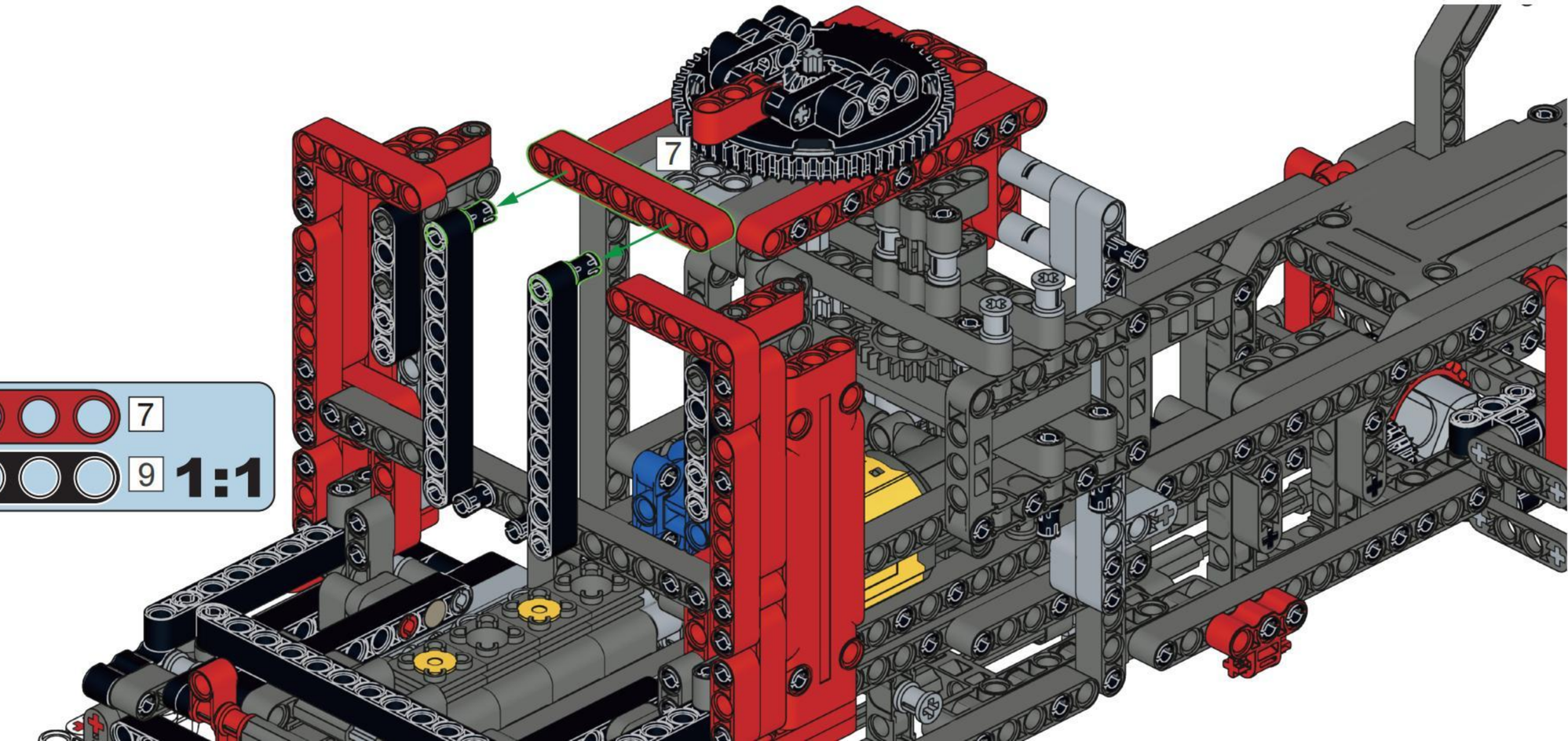

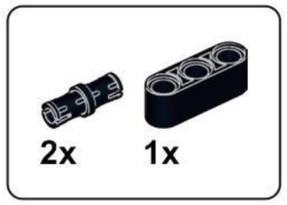


# B91

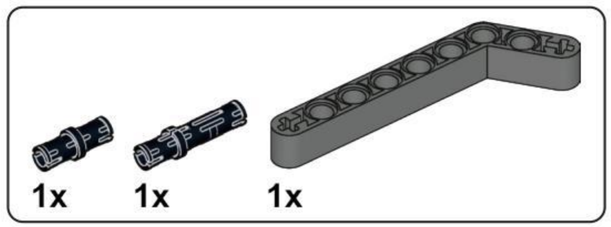


## B92

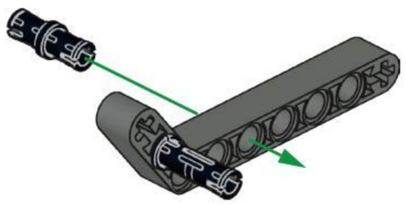

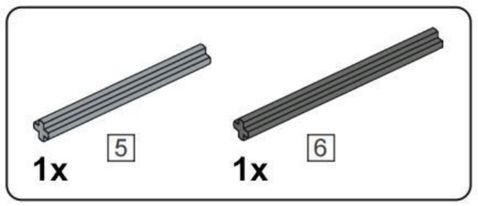


## B93

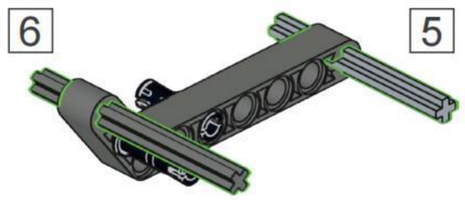


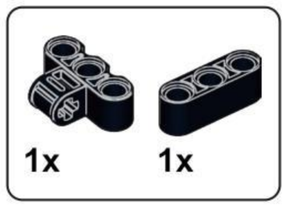


## B94

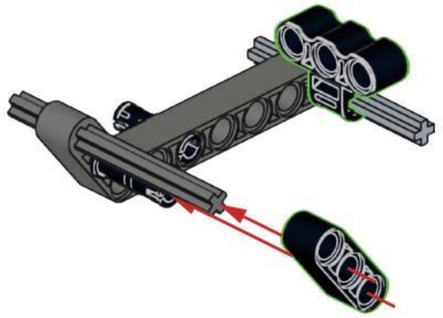

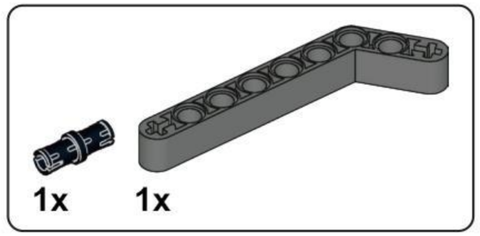


## B95

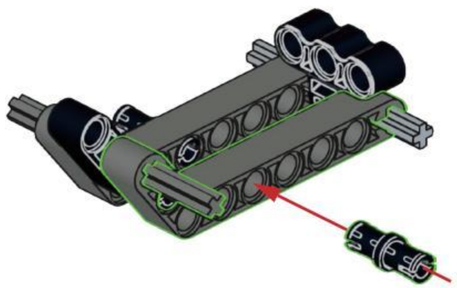

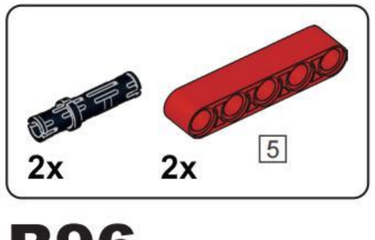


## B96

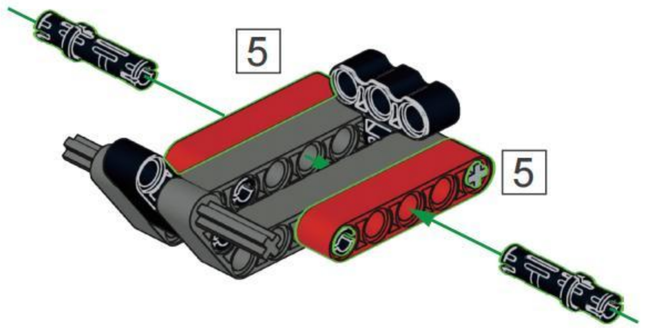


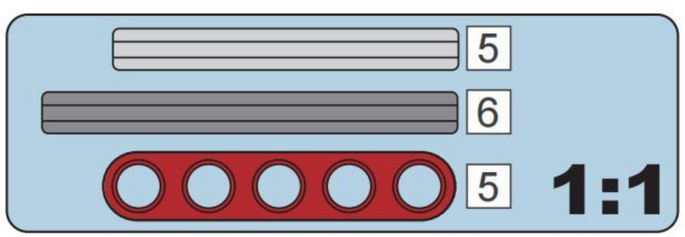


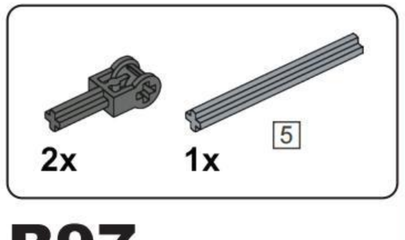


## B97

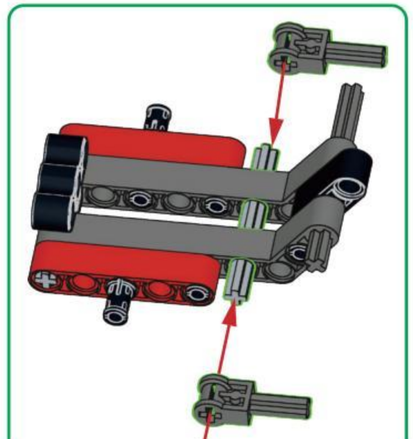

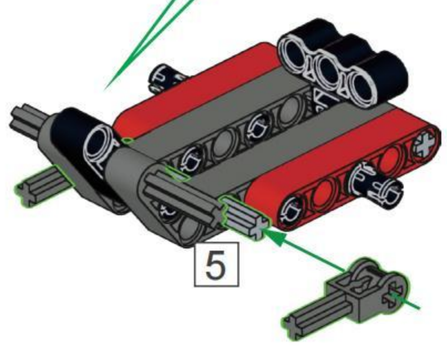

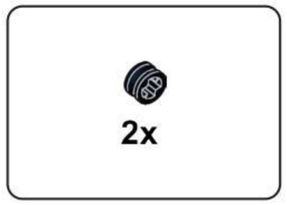


## B98

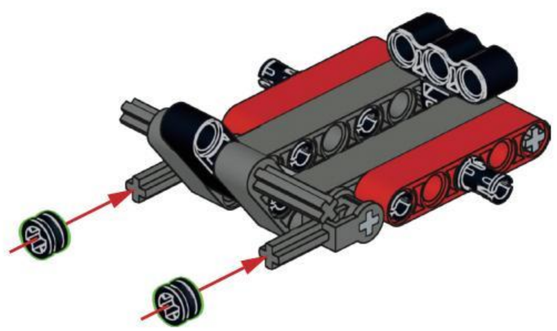

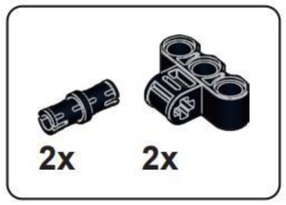


## B99

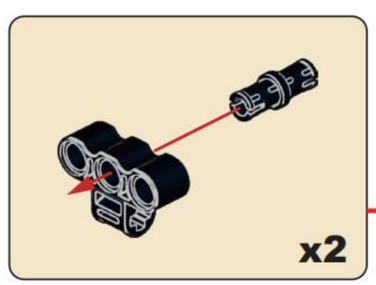


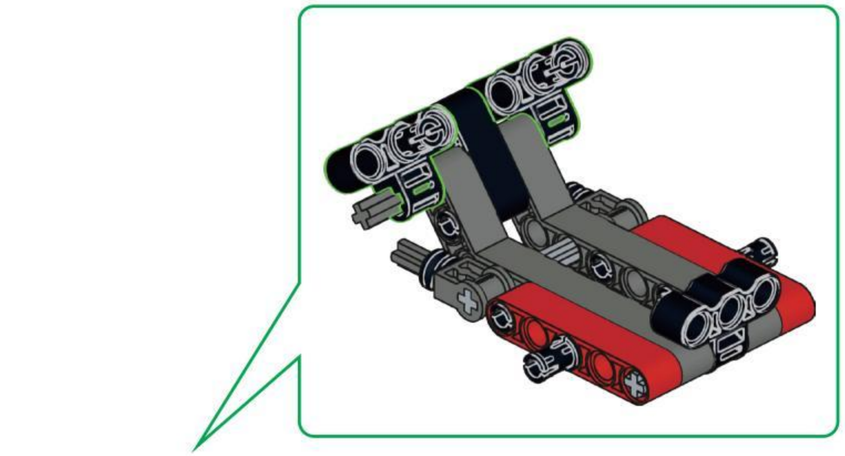

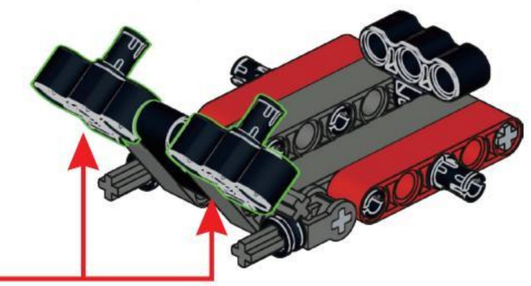

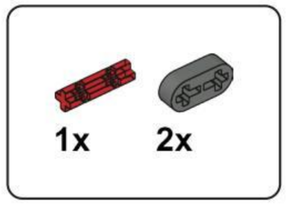


## B100

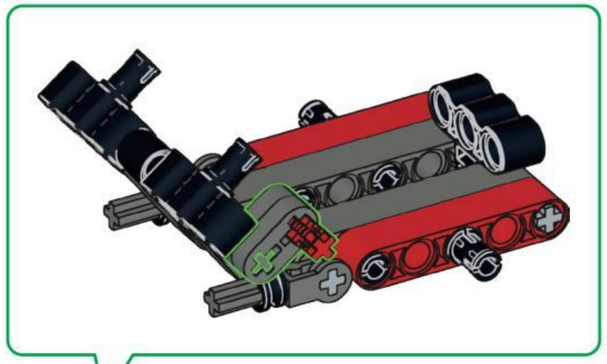

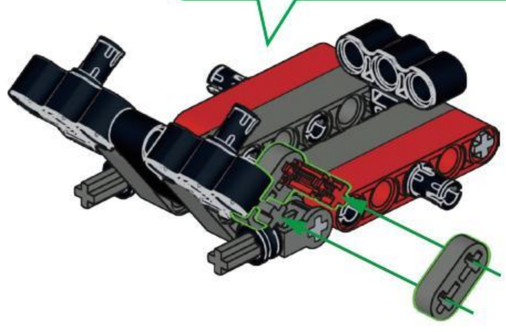

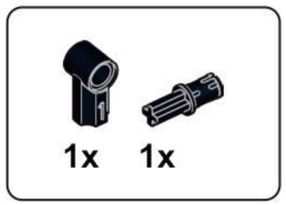


## B101

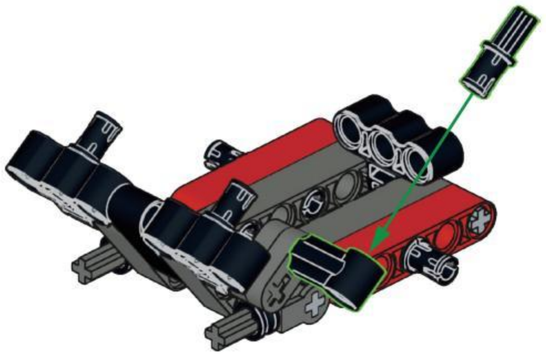

# B102

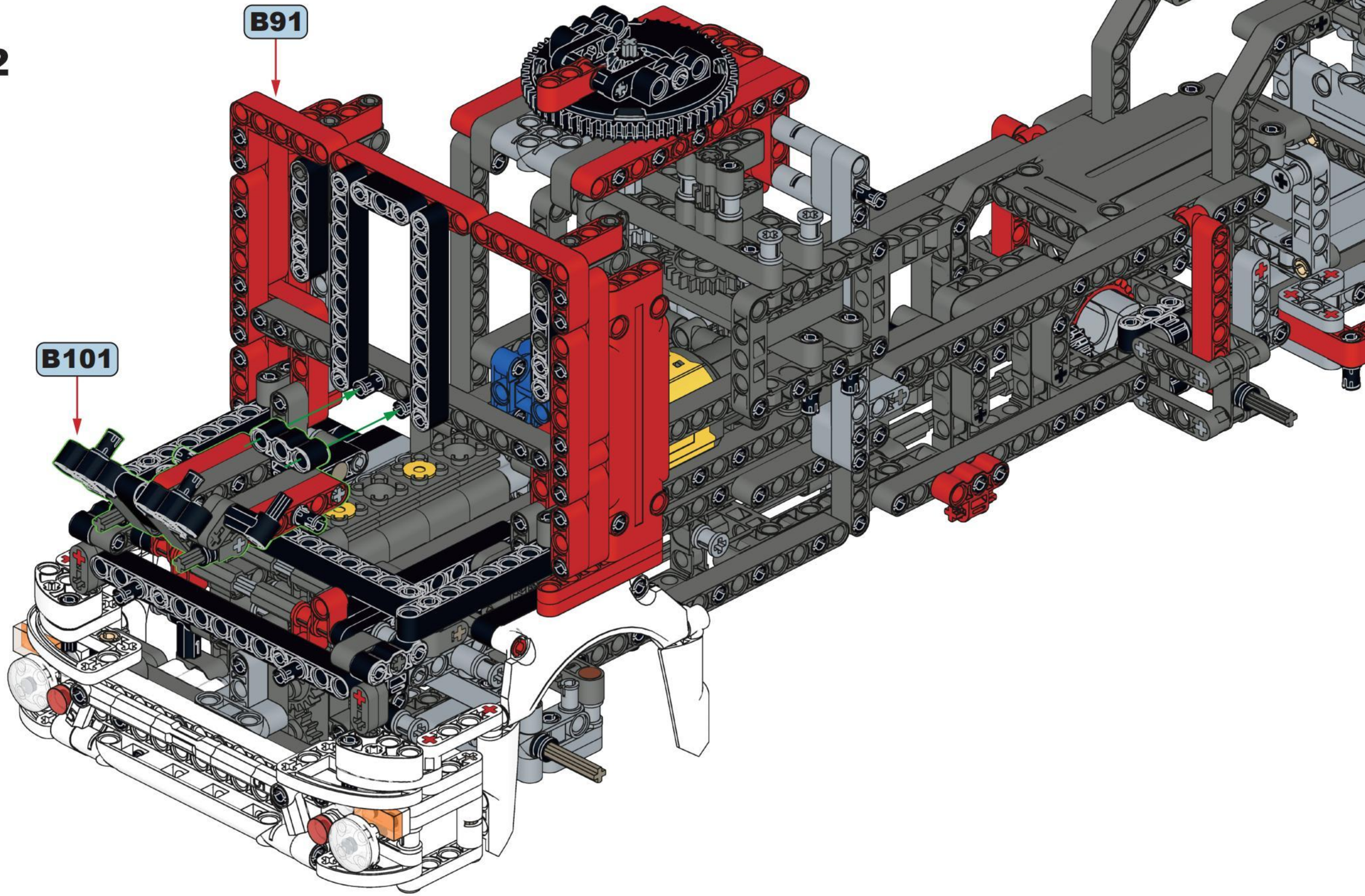

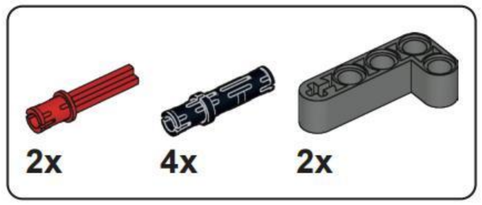


## B103

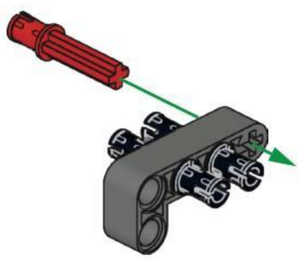

x2

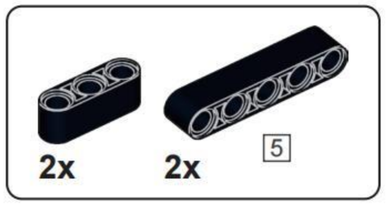


## B104

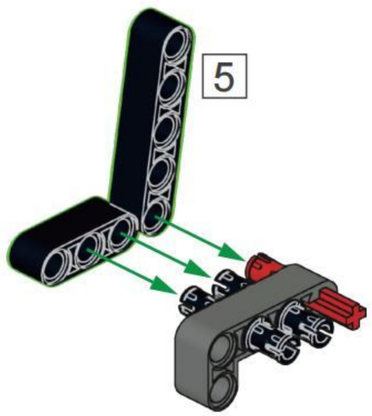


x2

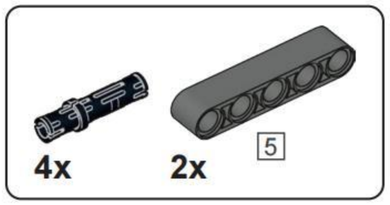


## B105

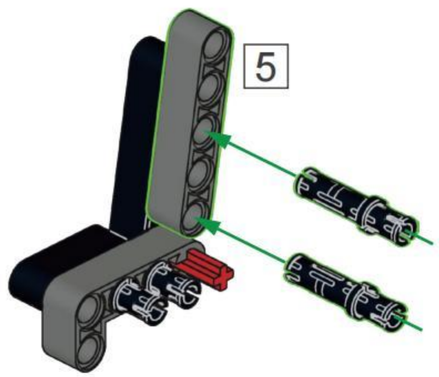


x2

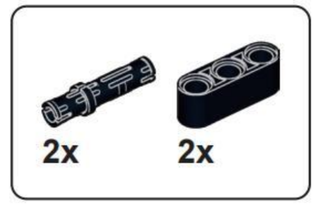


## B106

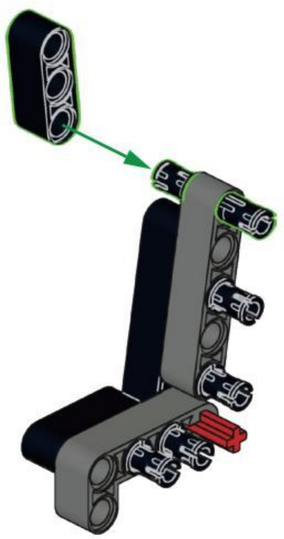

x2

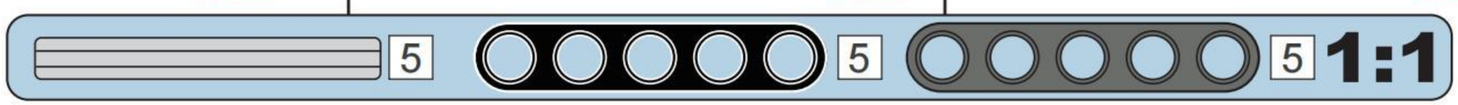


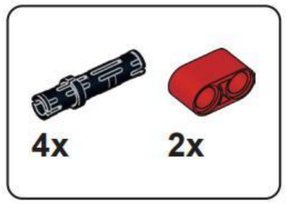


## B107

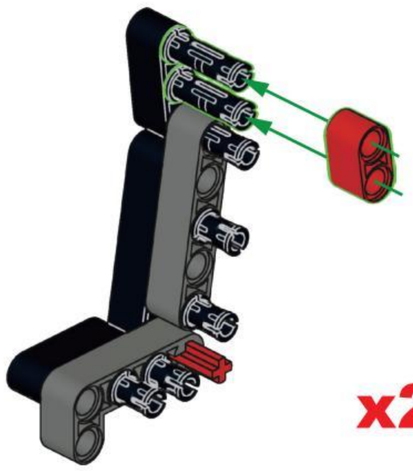

x2

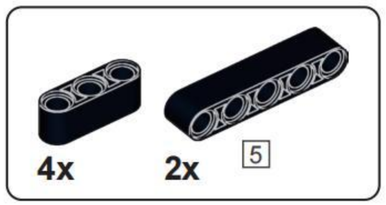


## B108

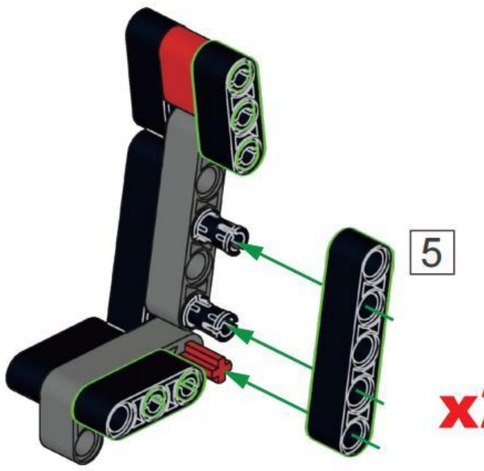


x2

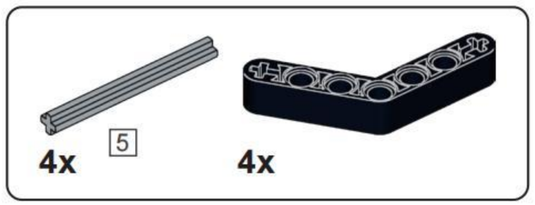


## B109

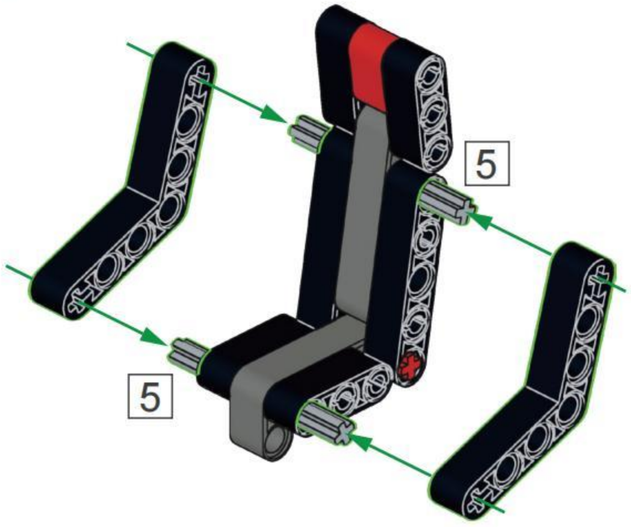


x2

# B110

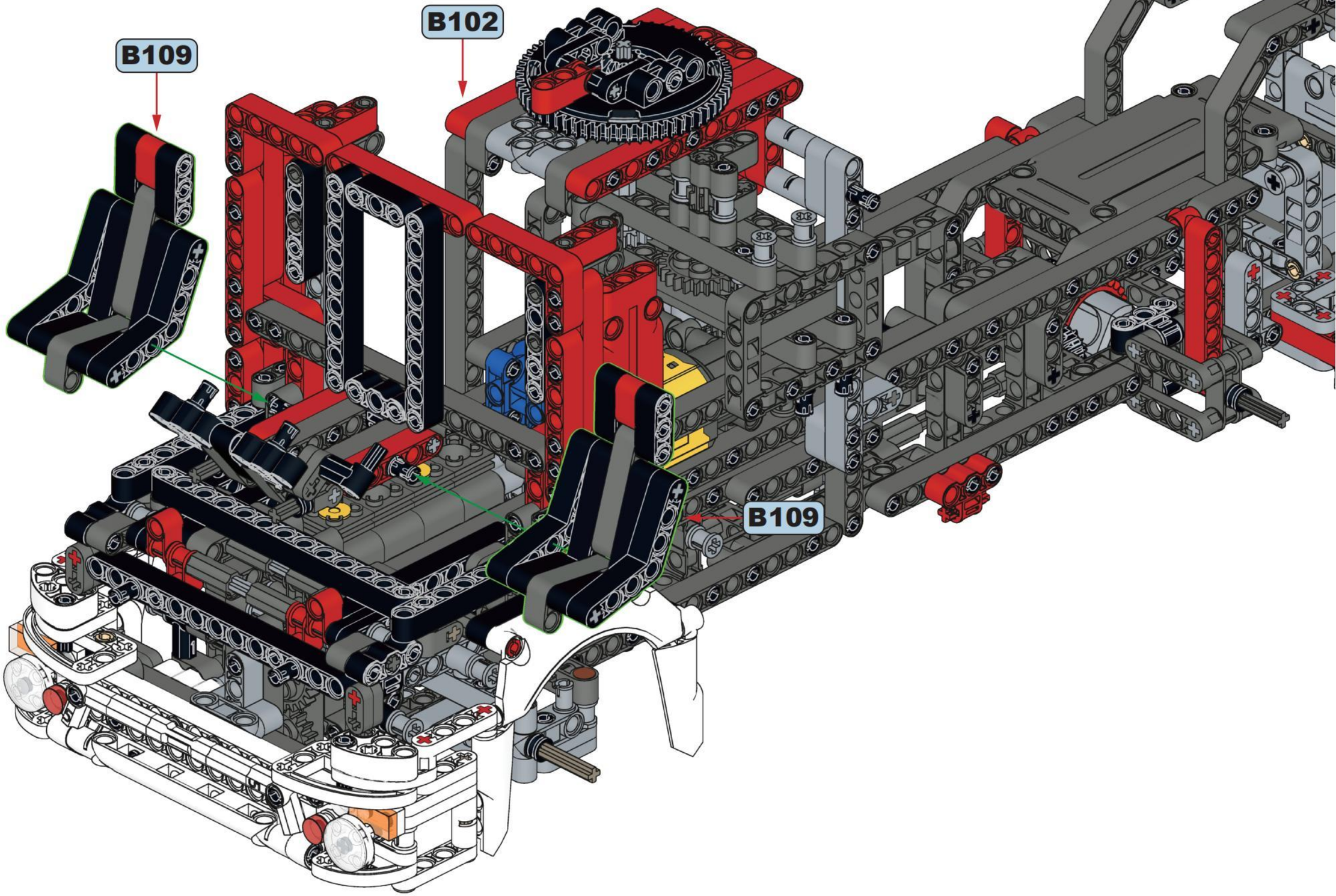

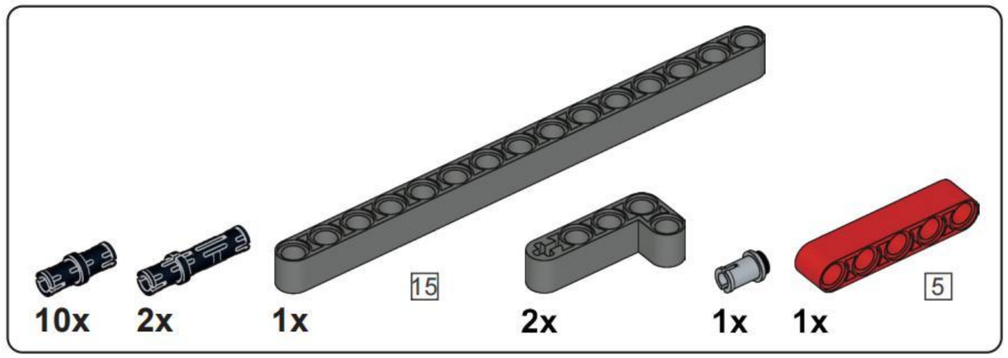


## B111

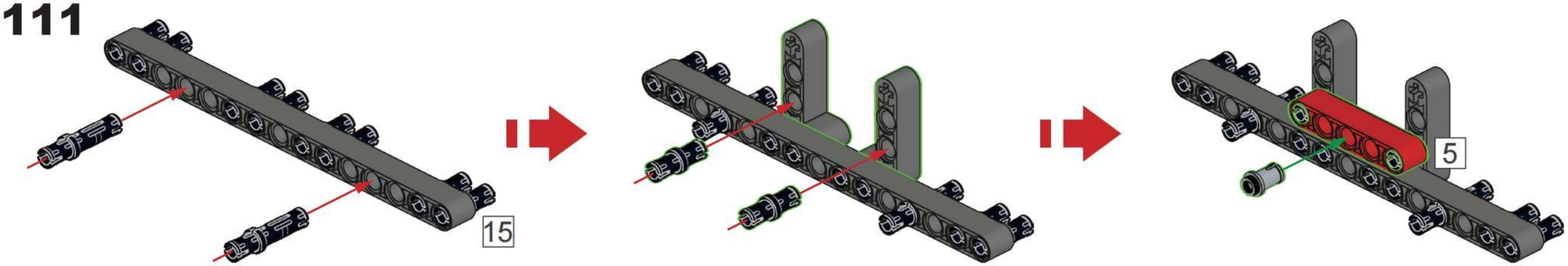


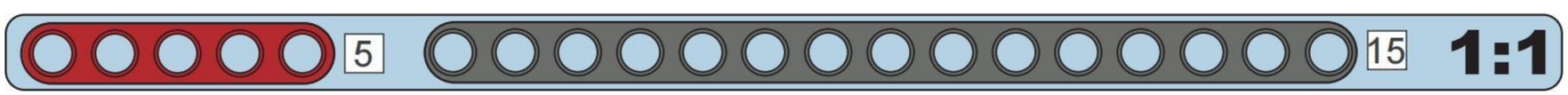


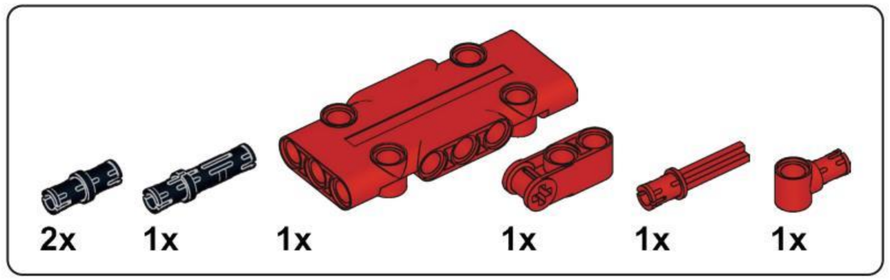


## B112

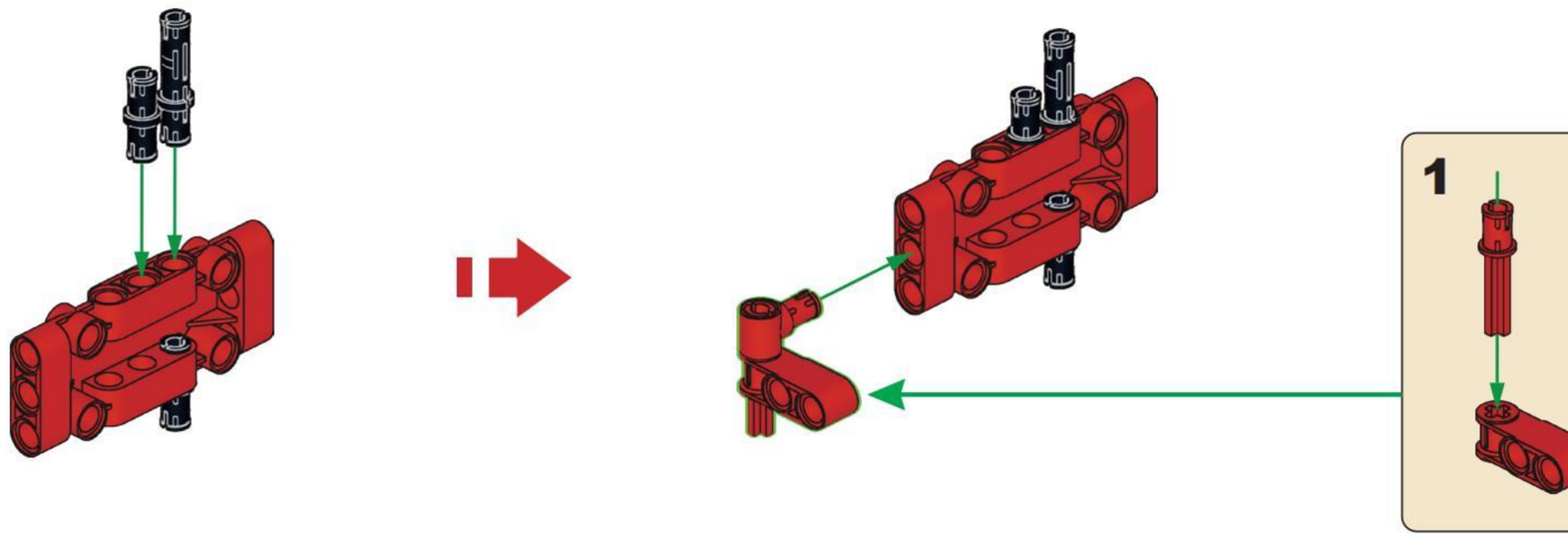

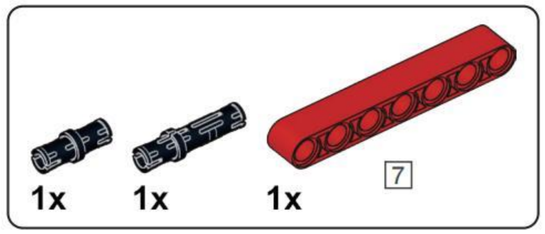


## B113

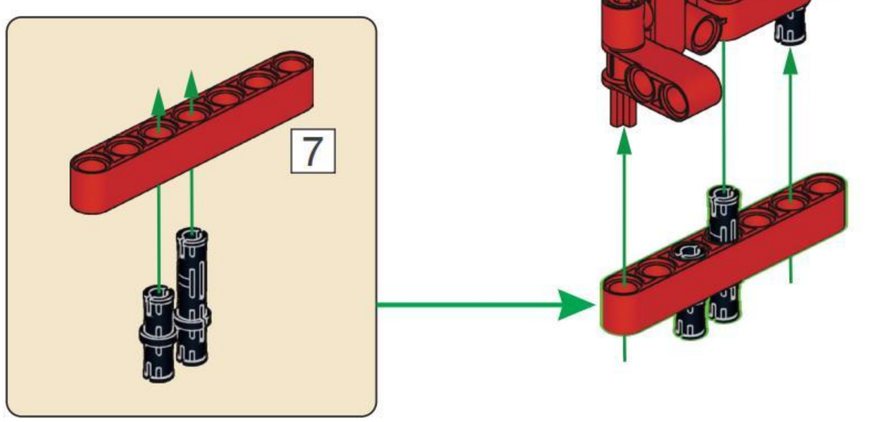


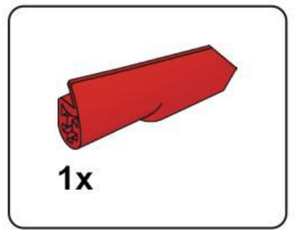


## B114

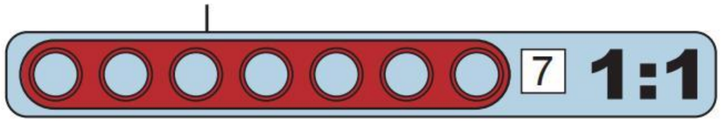


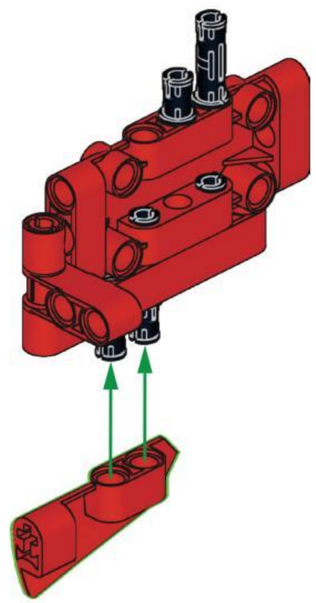

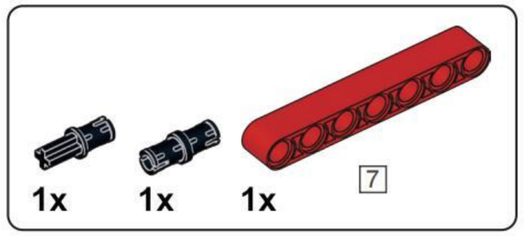


## B115

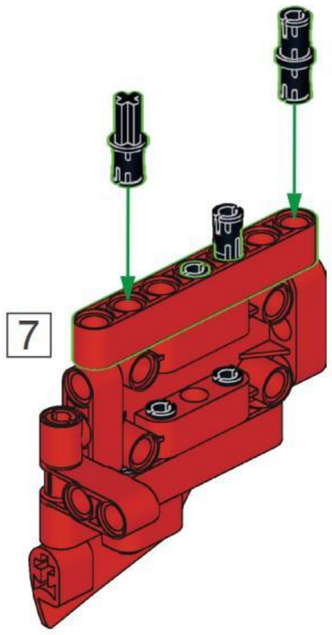


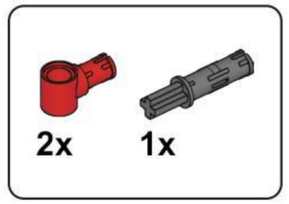


## B116

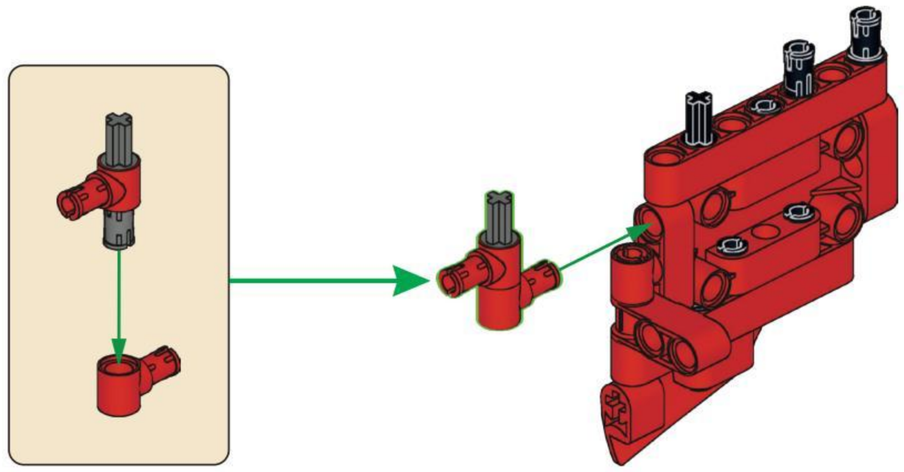

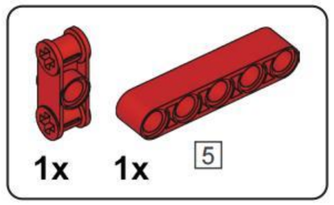


## B117

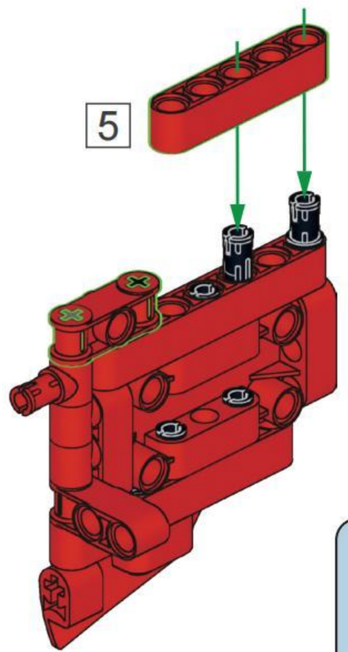


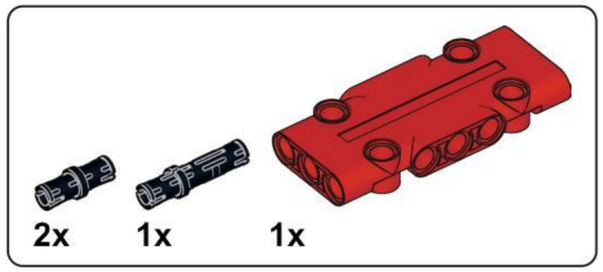


## B118

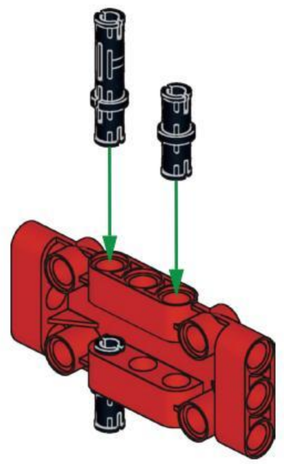

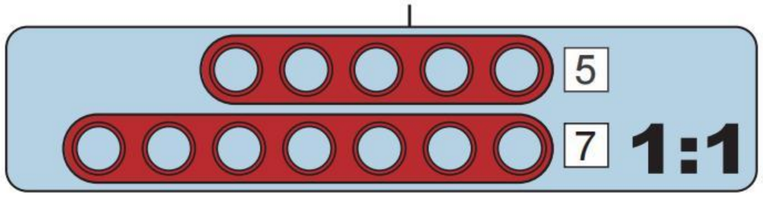


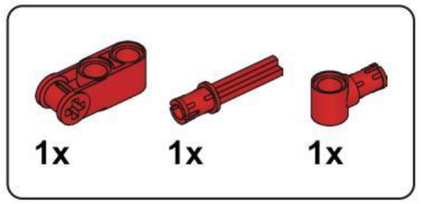


## B119

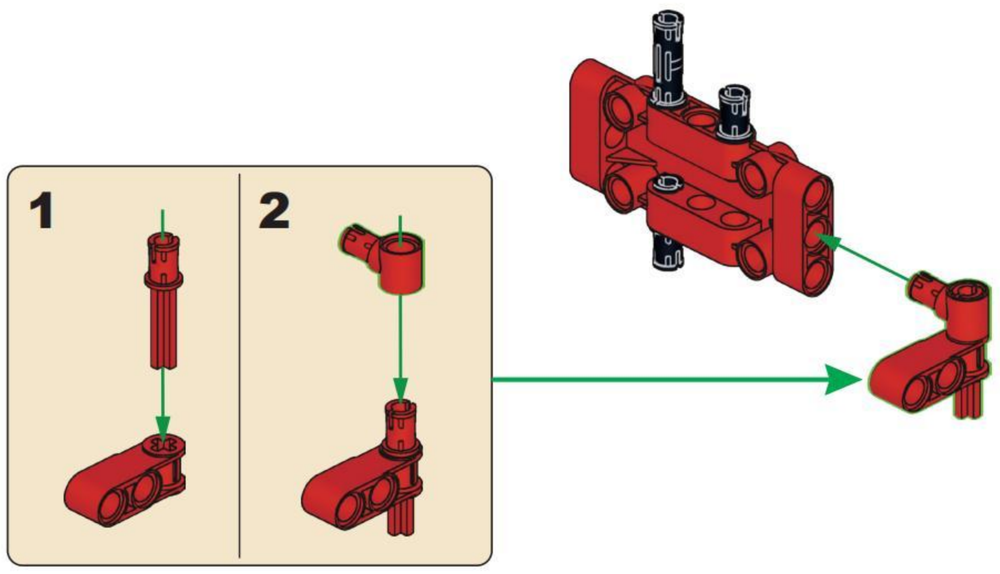


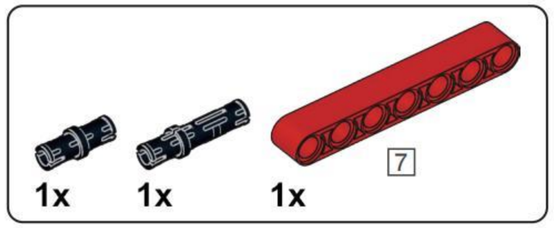


## B120

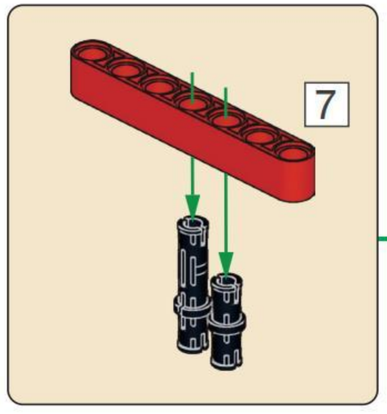


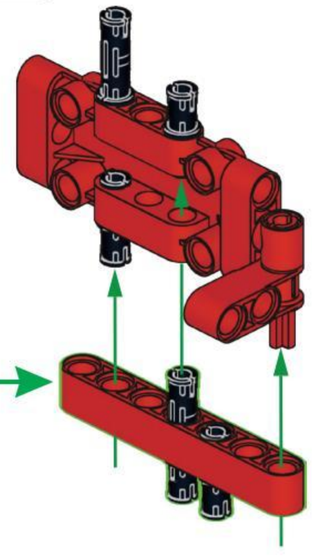

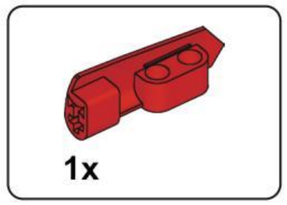


## B121

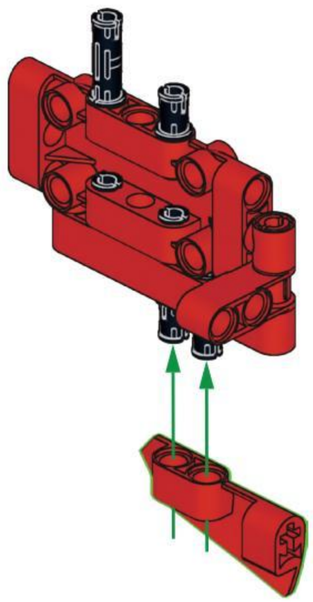

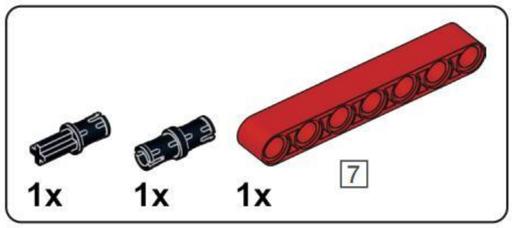


## B122

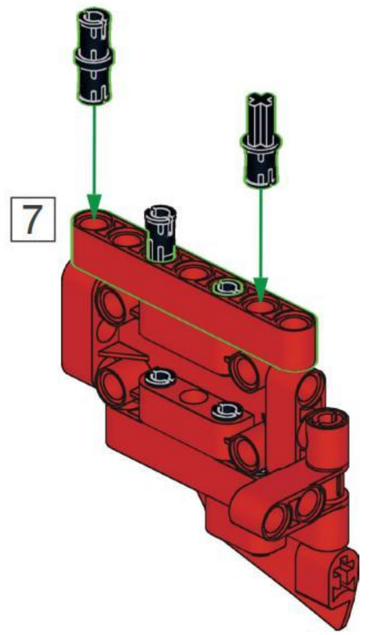


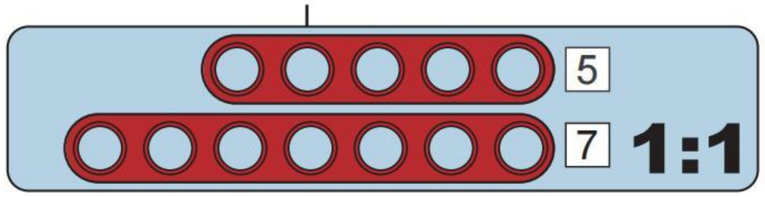


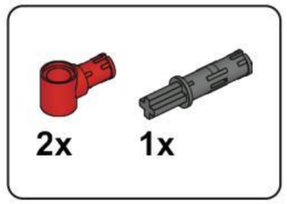


## B123

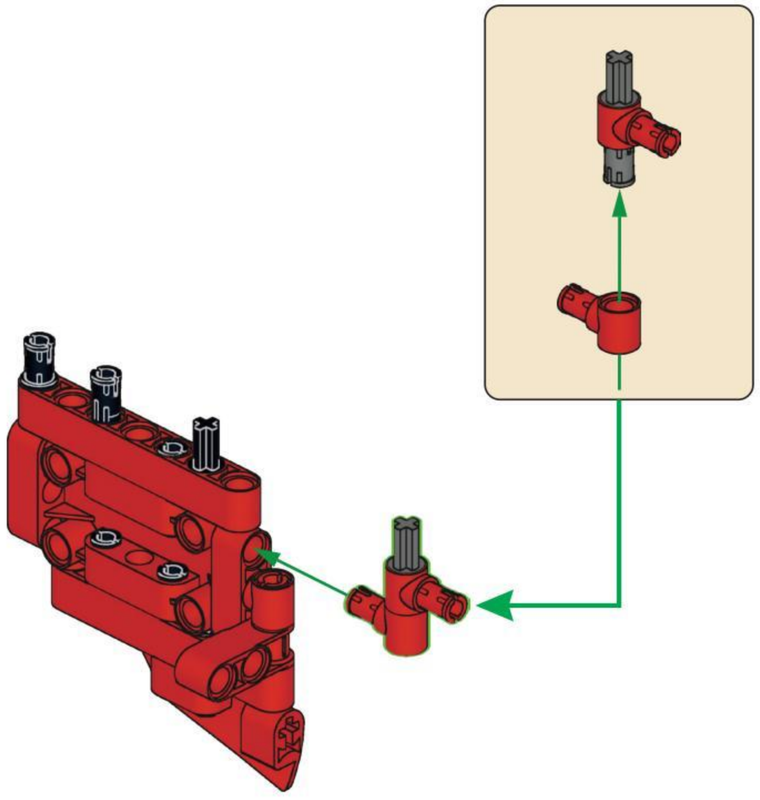

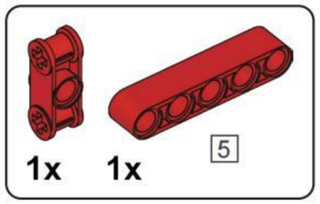


## B124

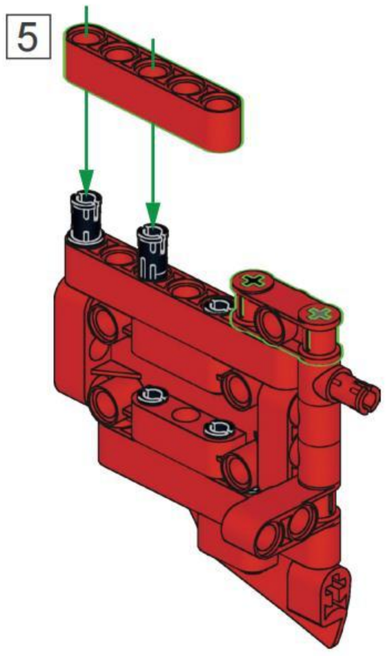

## B125

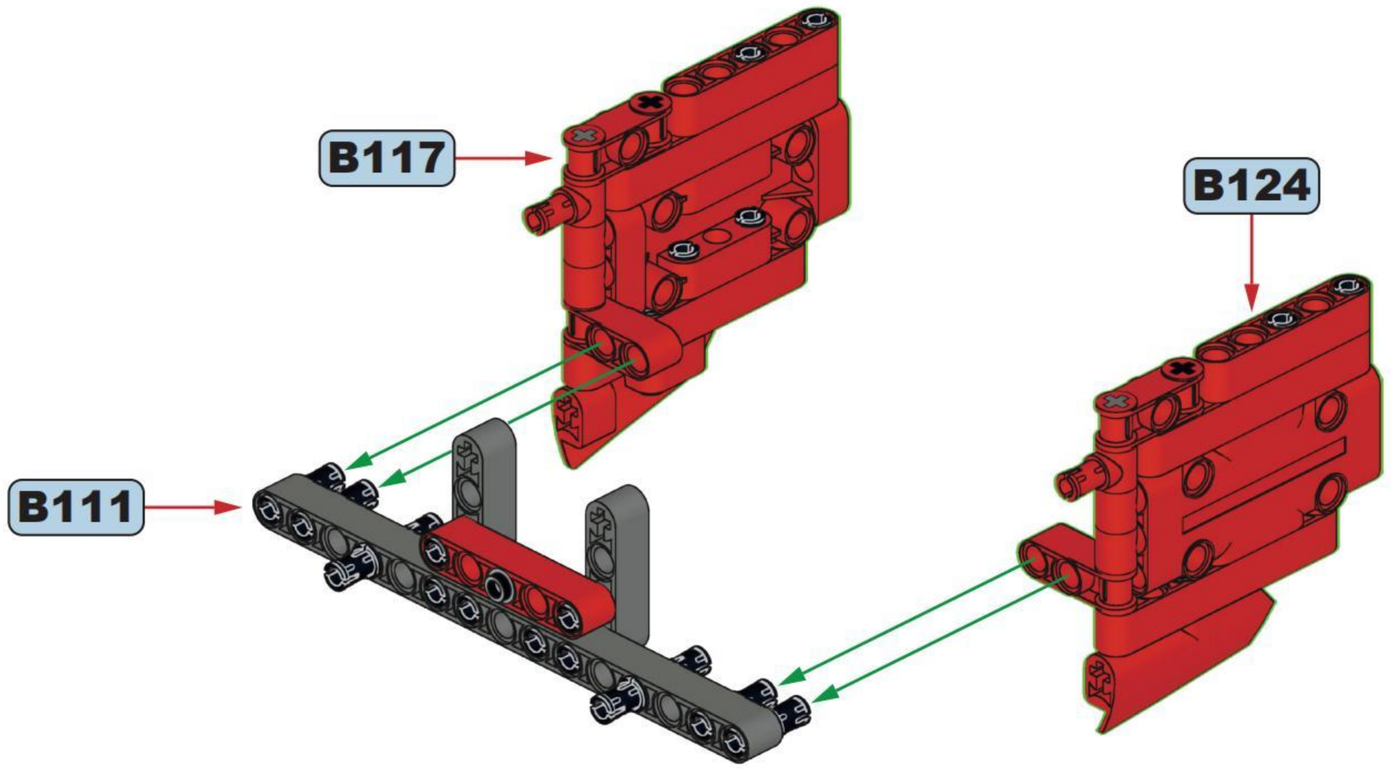


## B126

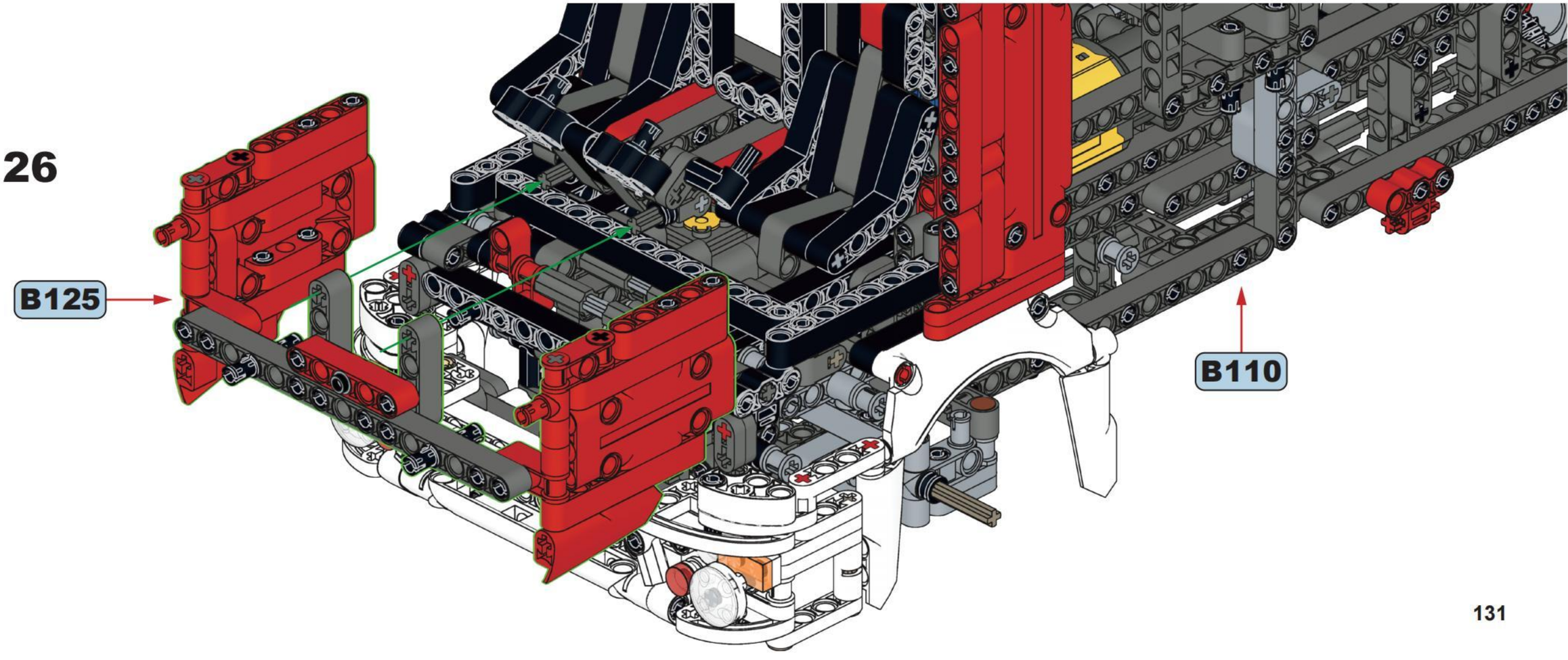

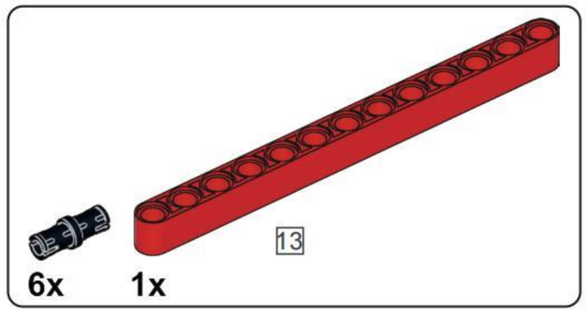


## B127

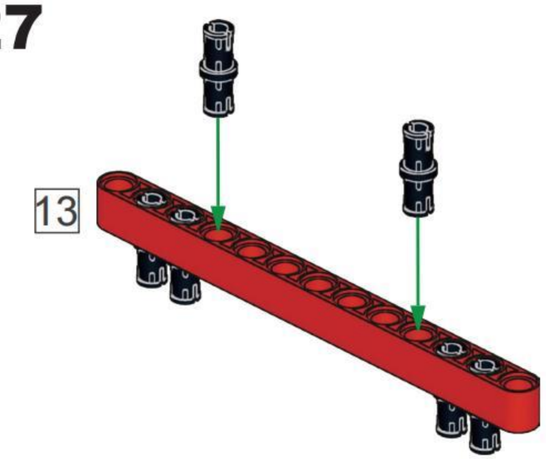


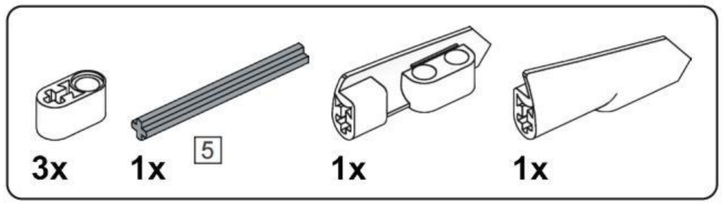


## B128

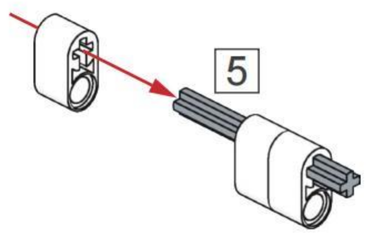


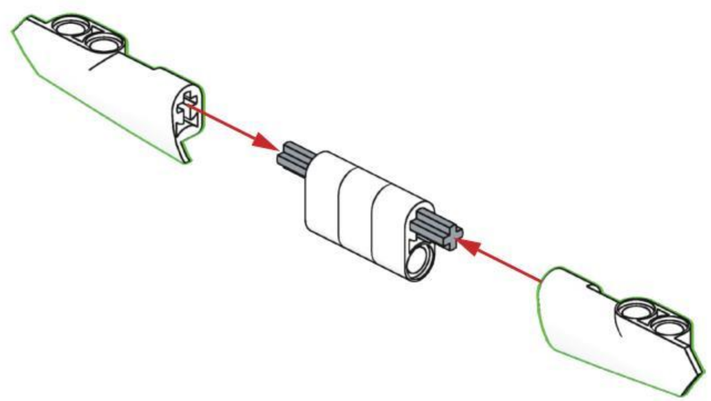

## B129

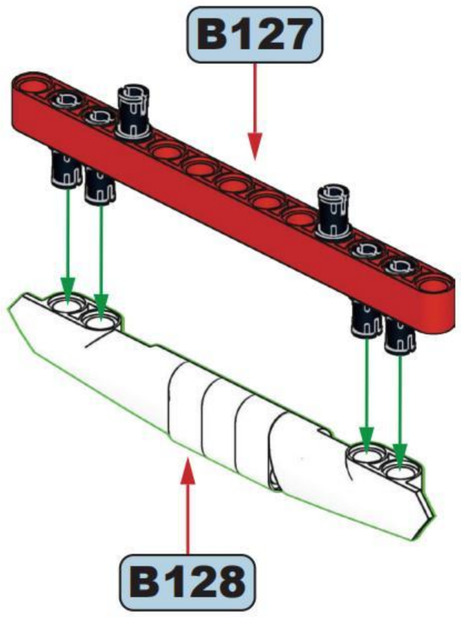


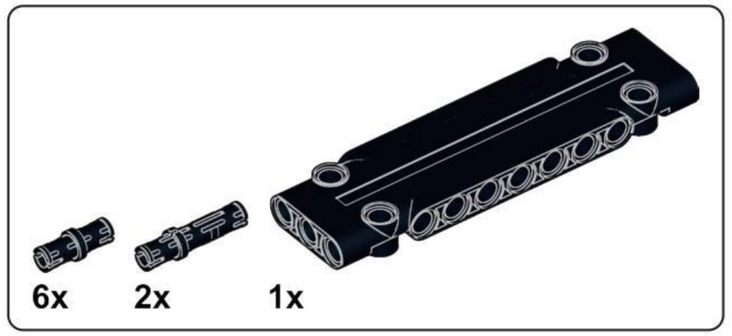


## B130

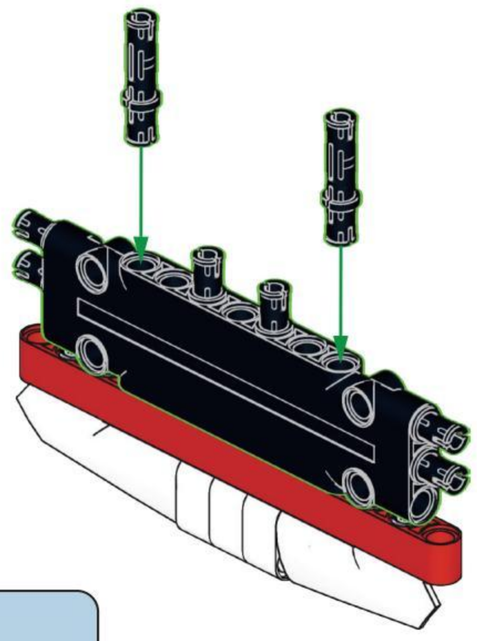

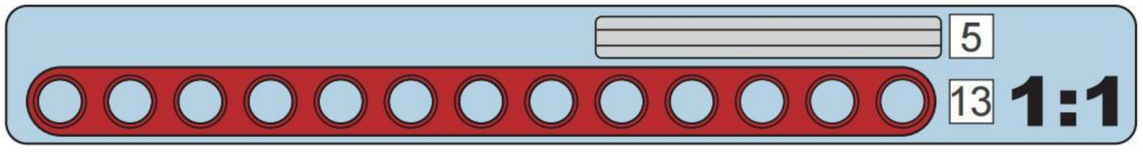

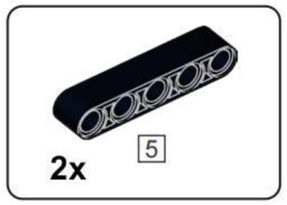


## B131

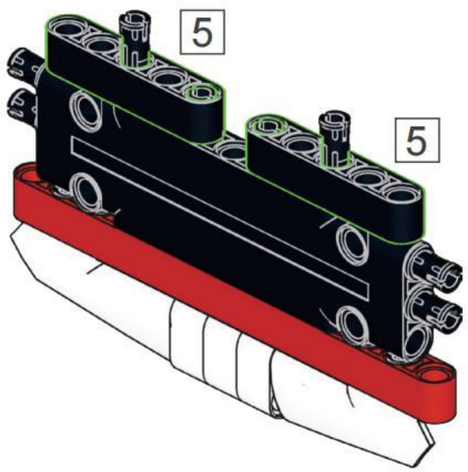


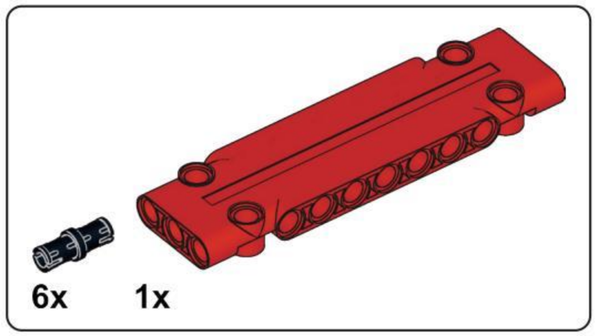


## B132

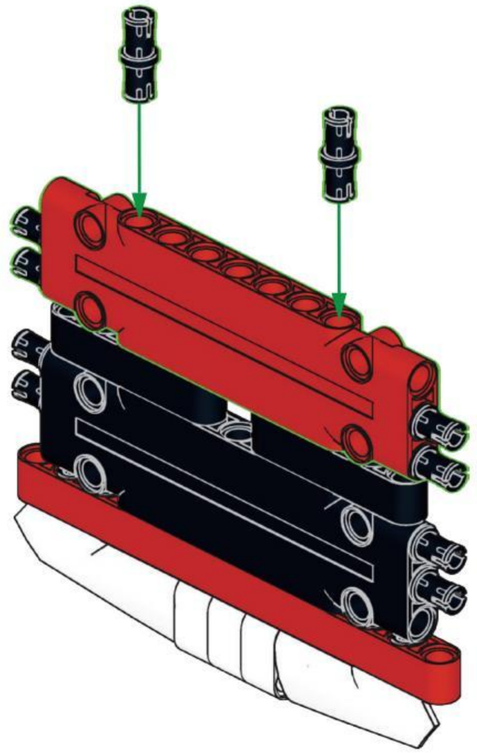

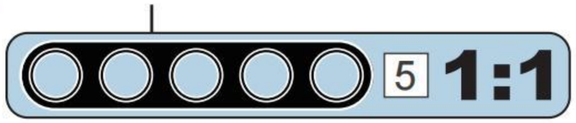


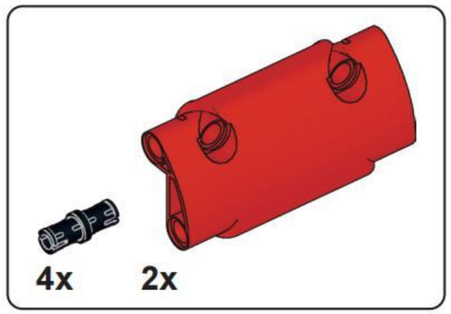


## B133

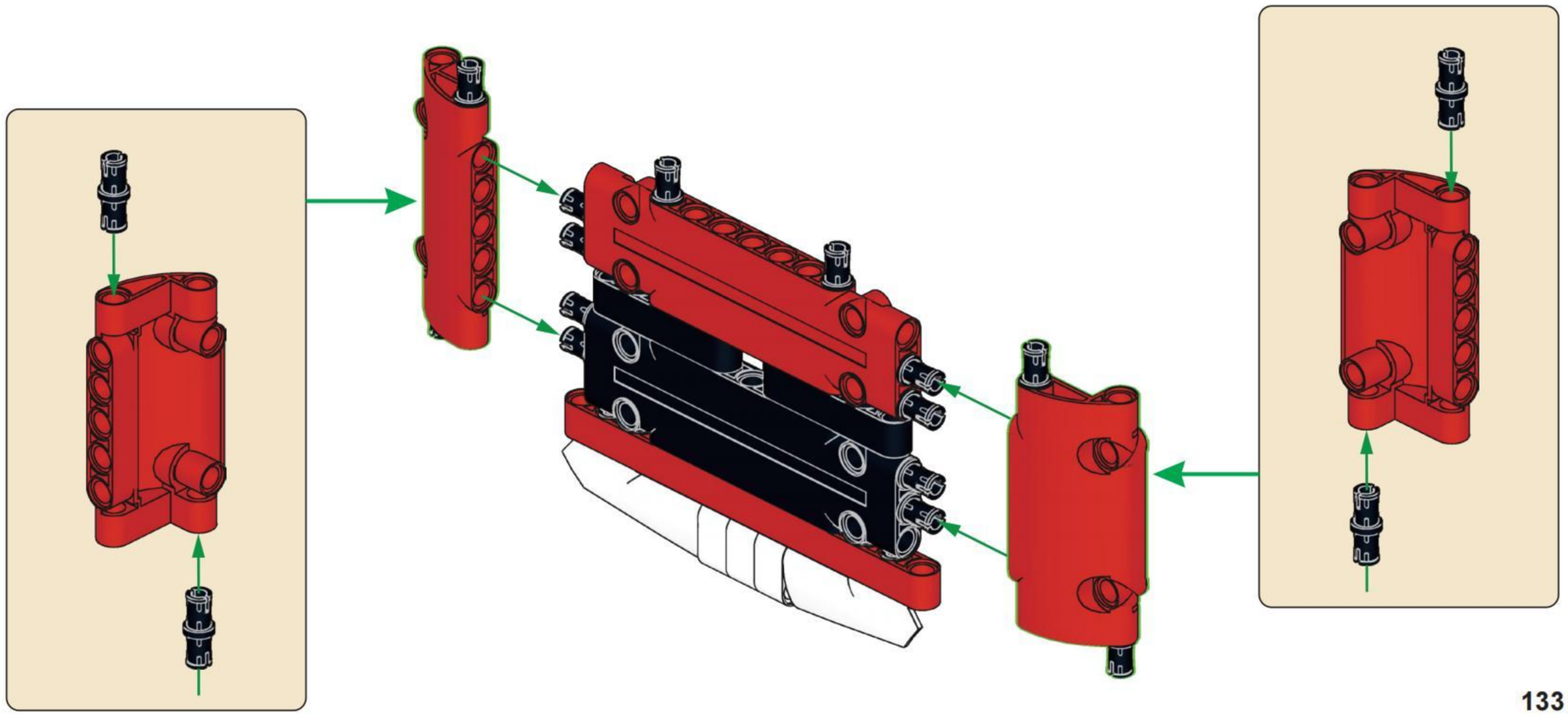

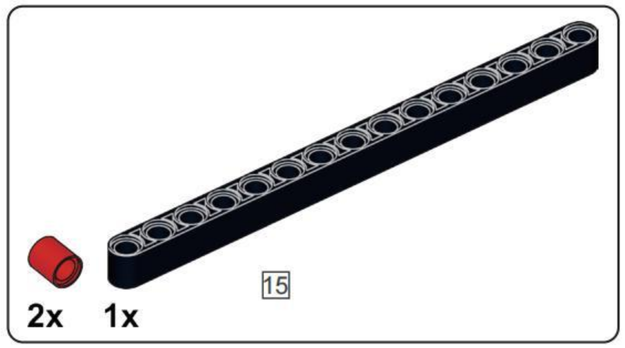


## B134

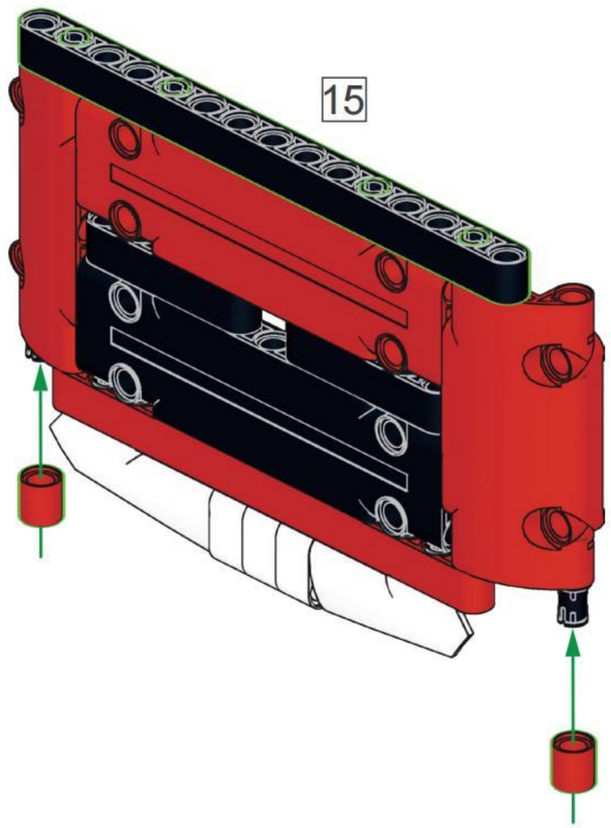


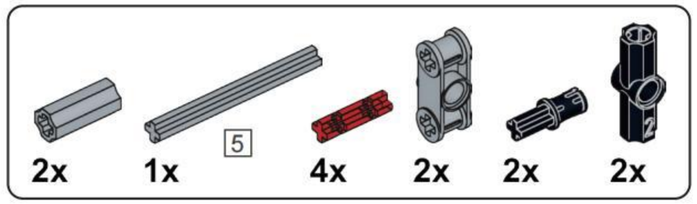


## B135

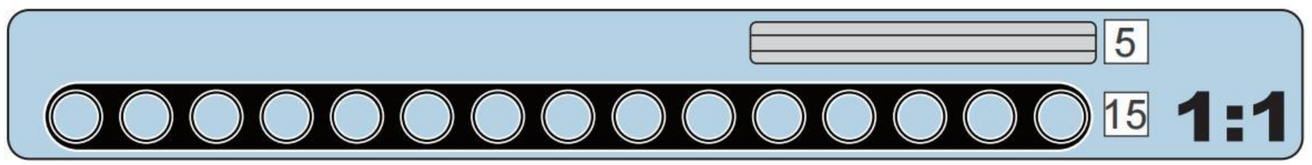


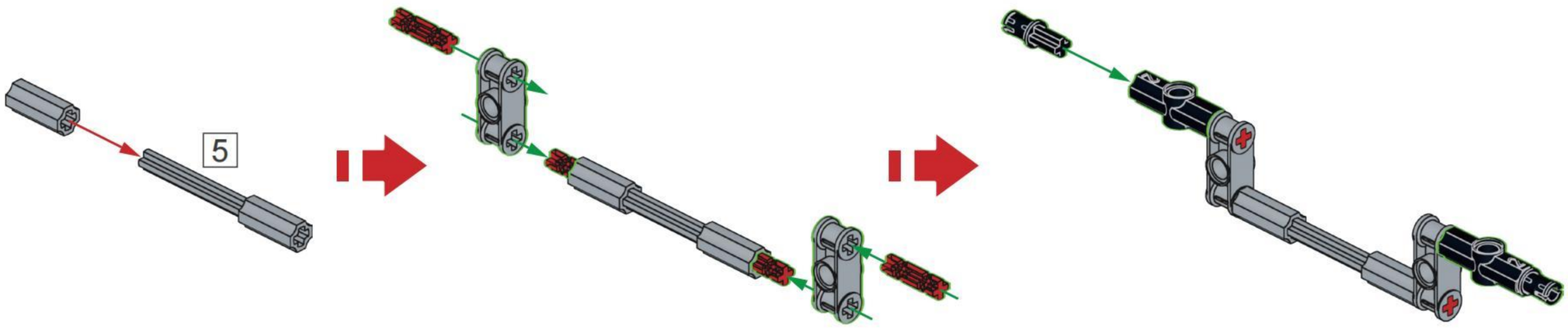

2x

**B136**

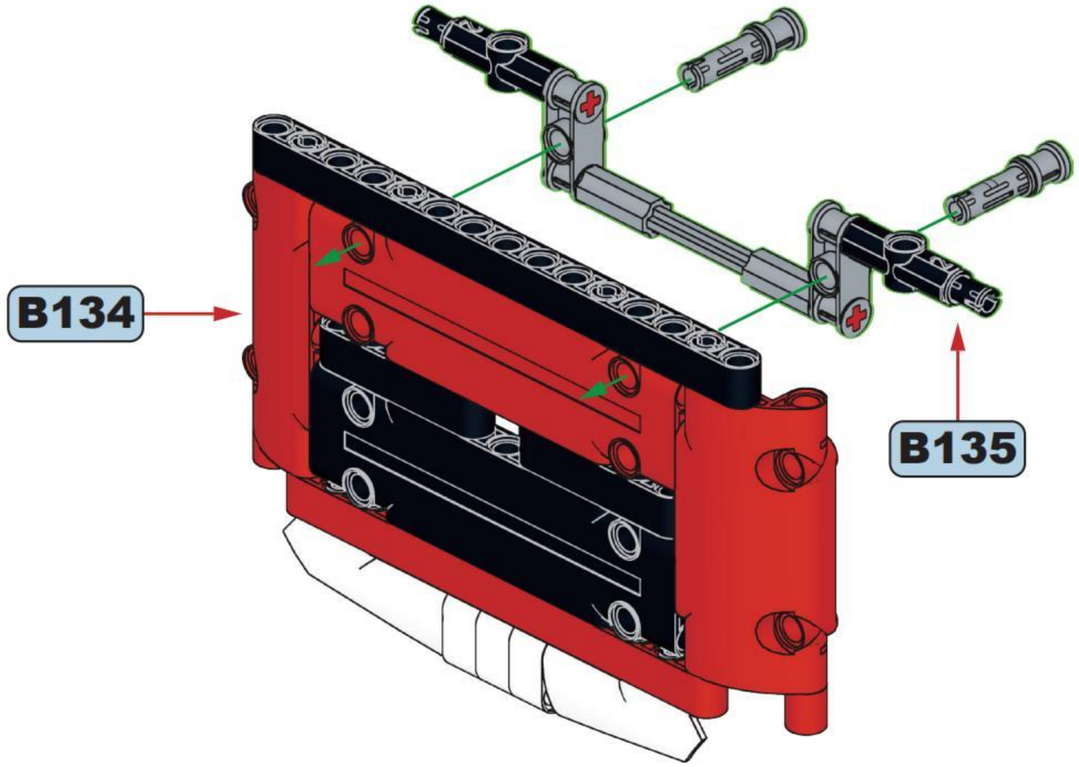


**B137**

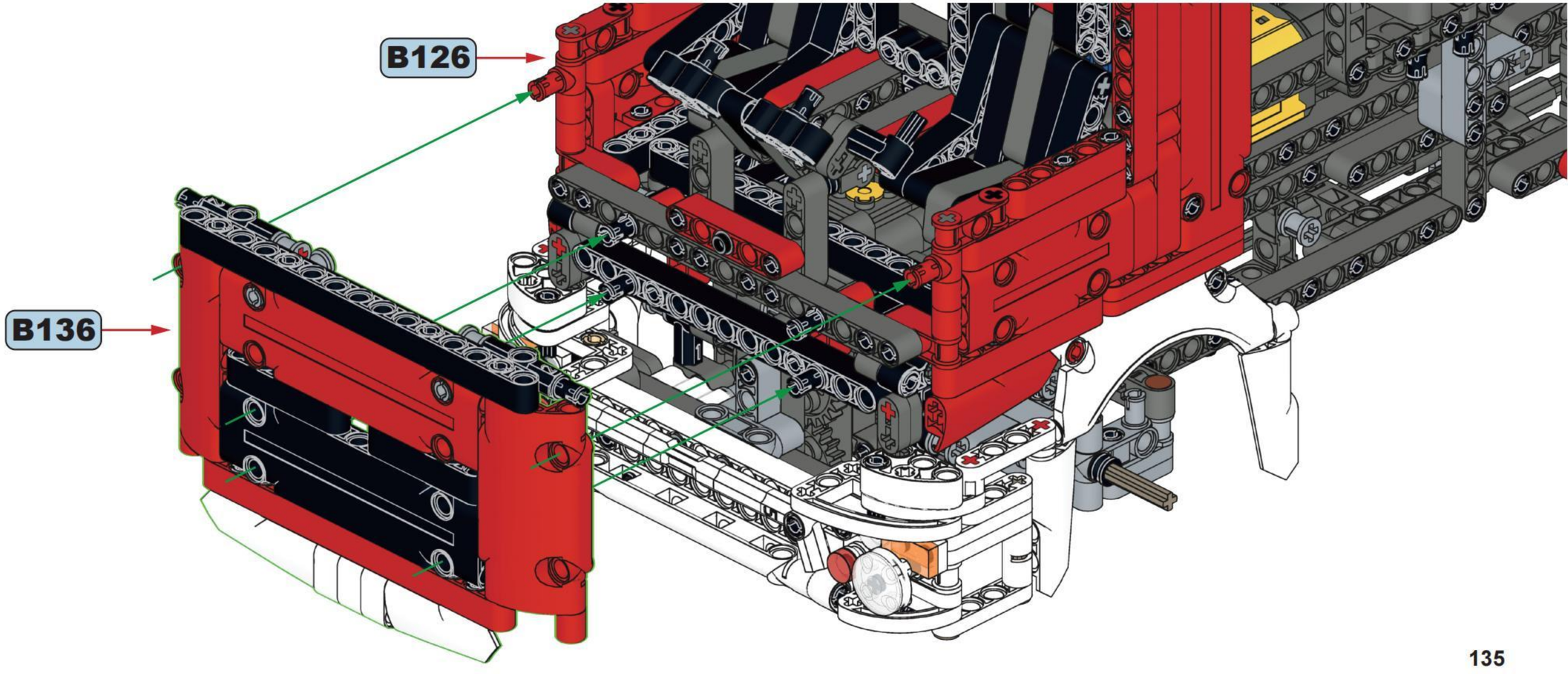

1x 1x

# B138

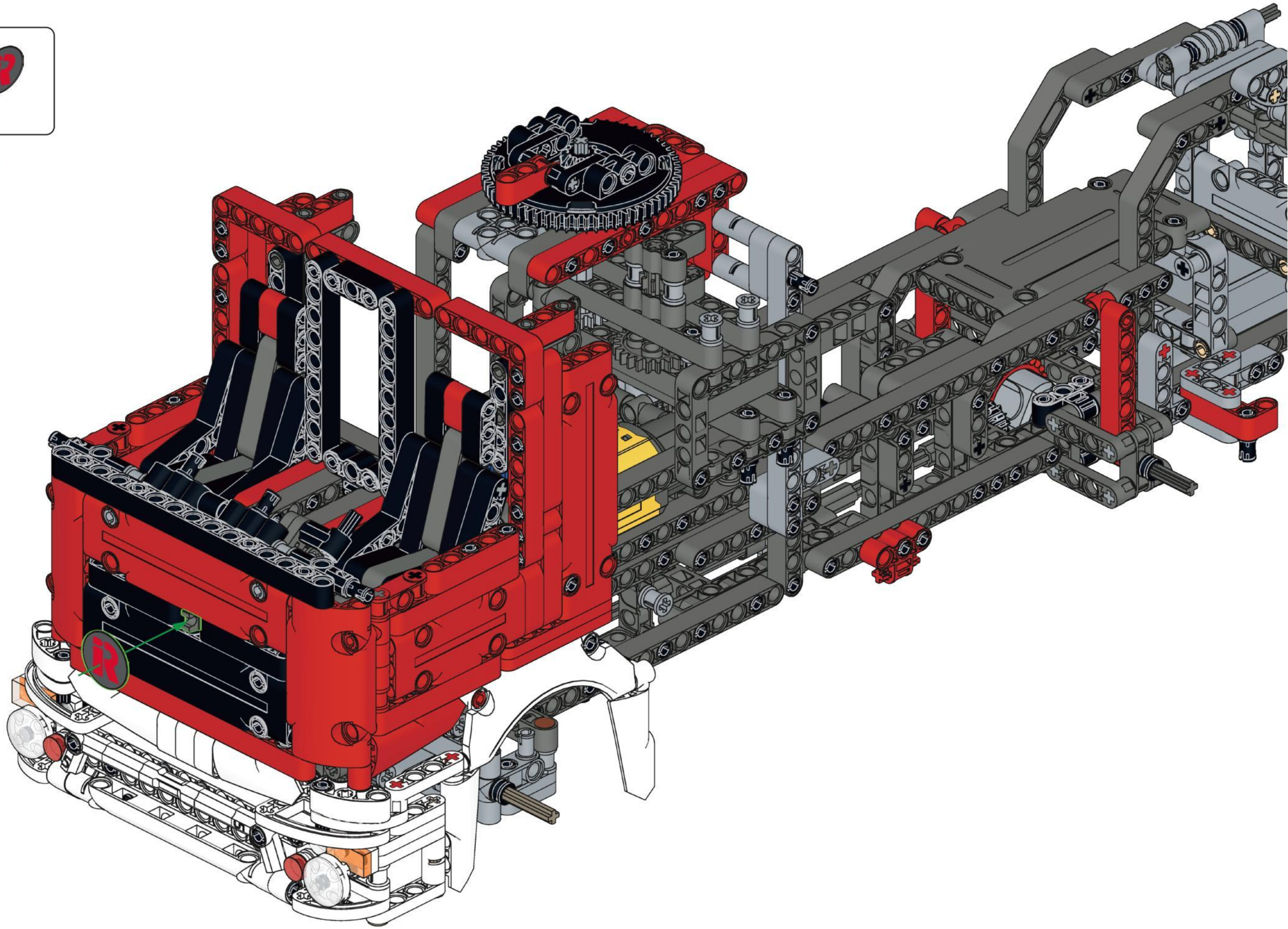

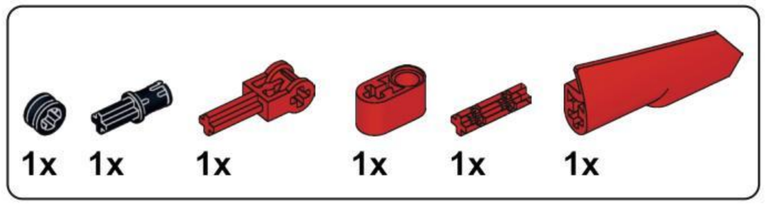


## B139

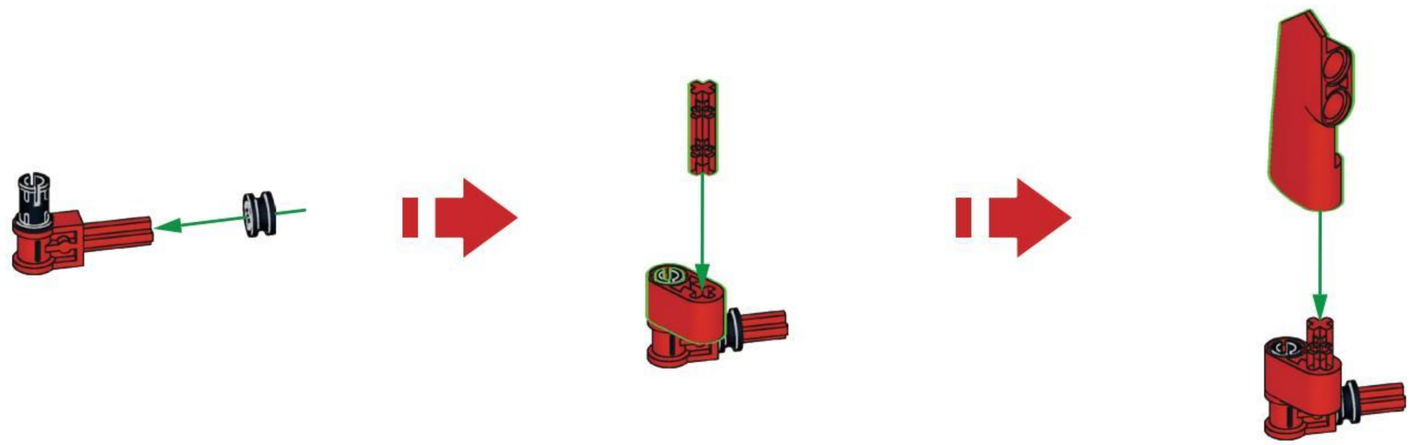

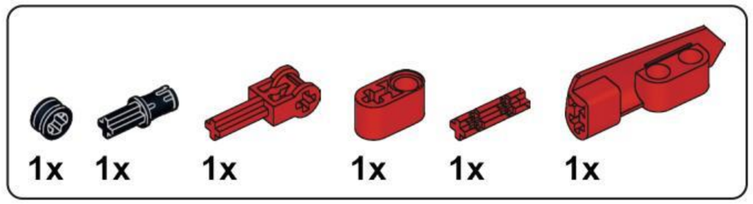


## B140

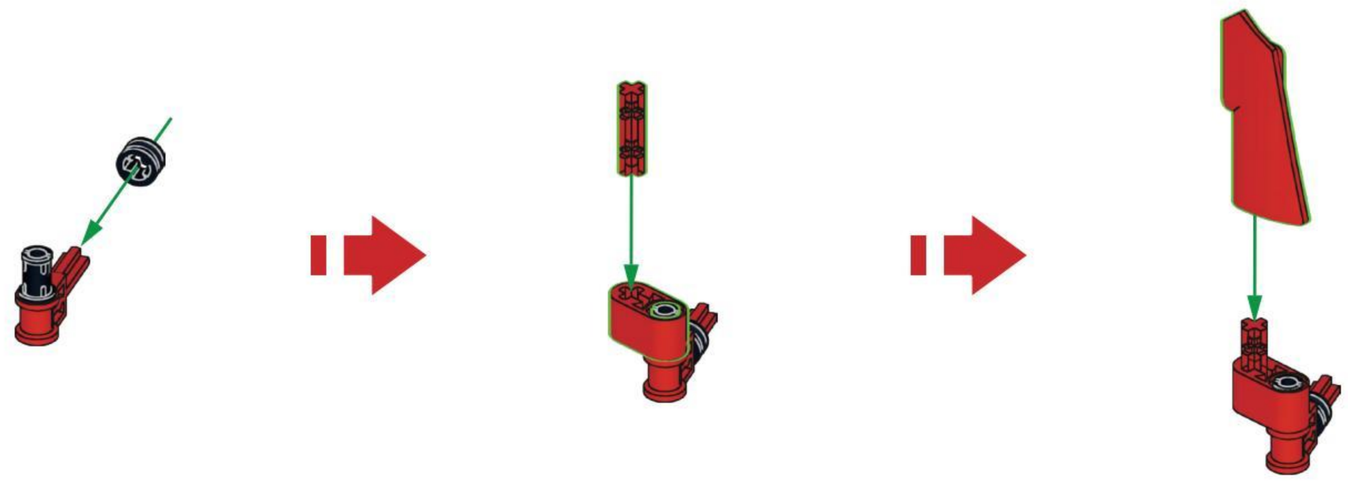

**B141**

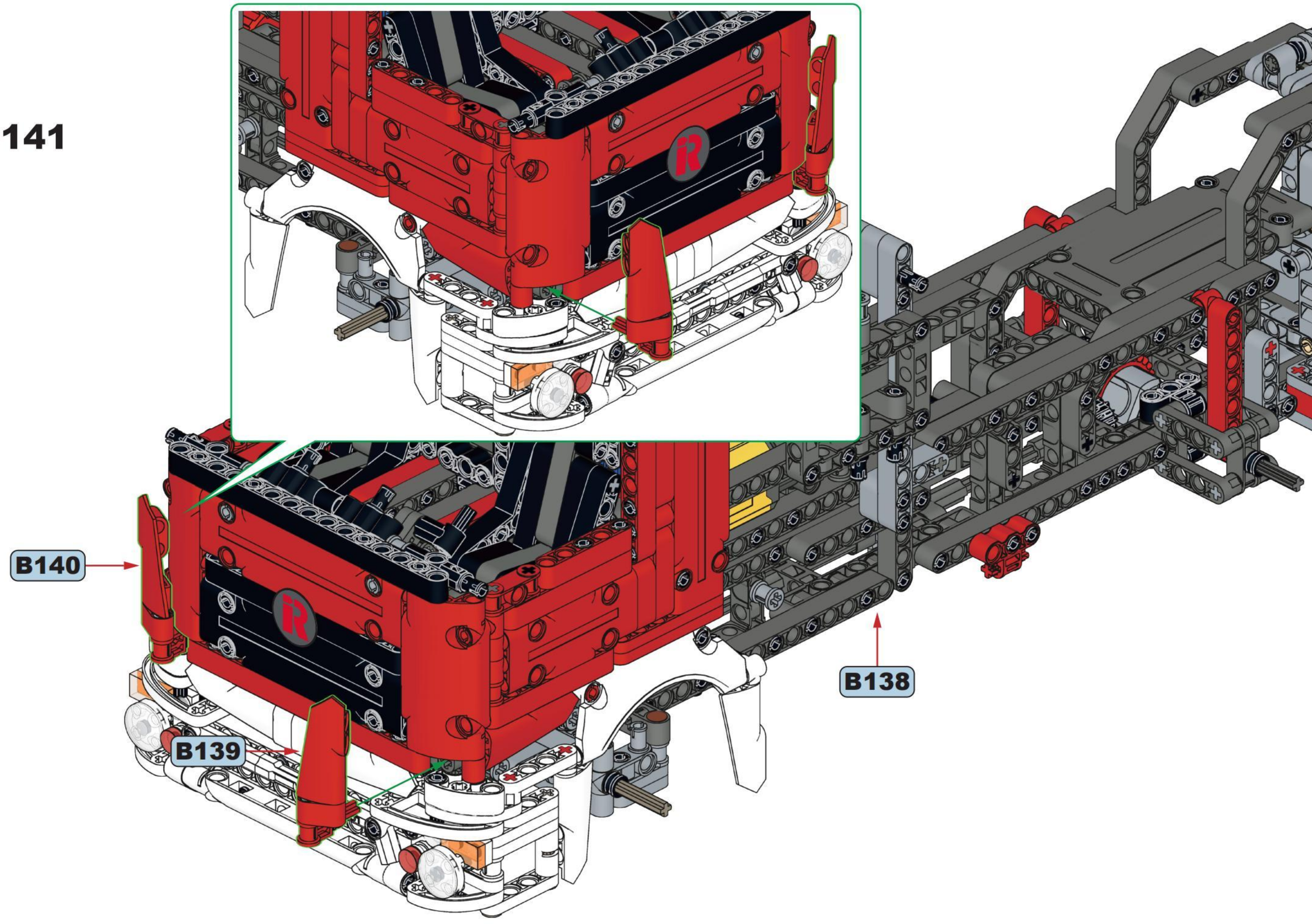

2x 1x 1X4 1x 15

15 1:1

# B142

15

1X4

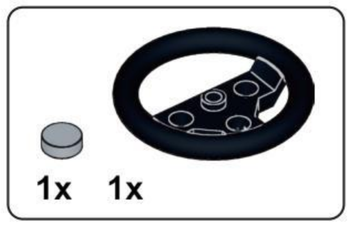


# B143

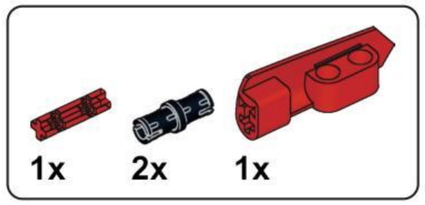


## B144

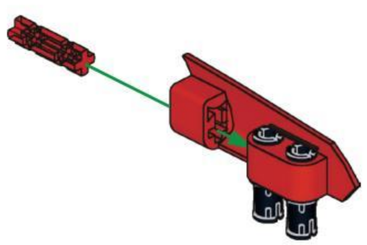

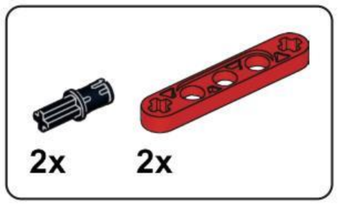


## B145

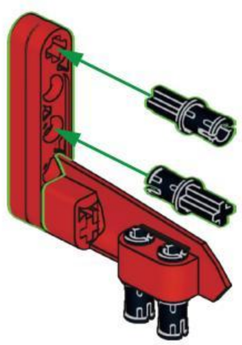

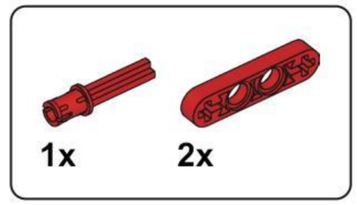


## B146

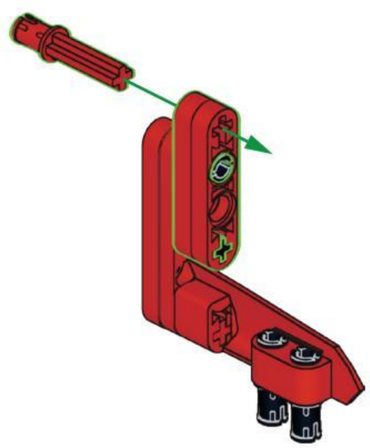

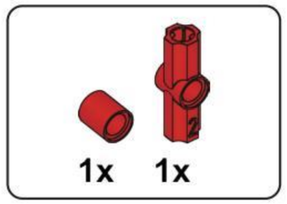


## B147

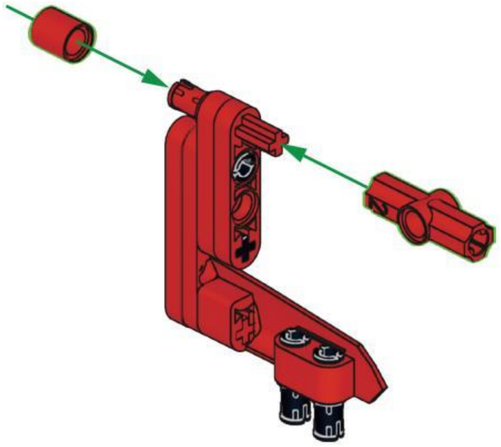

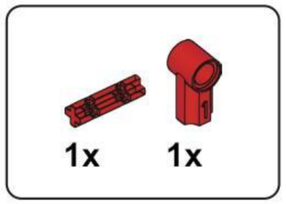


## B148

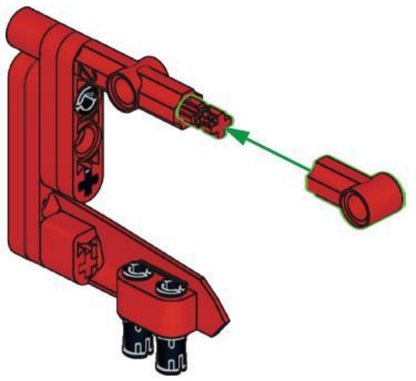

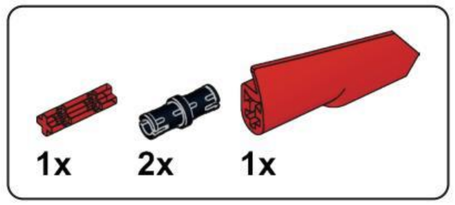


## B149

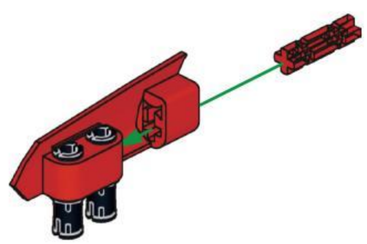

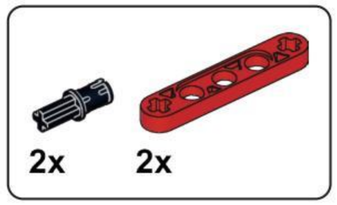


## B150

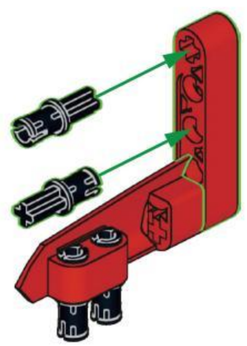

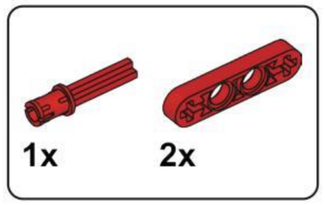


## B151

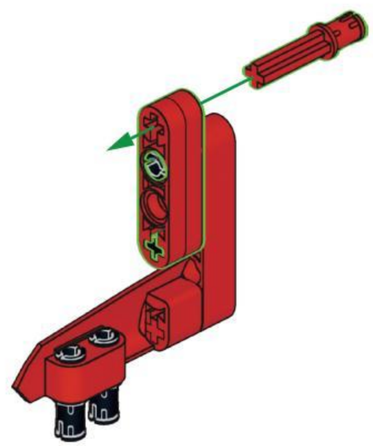

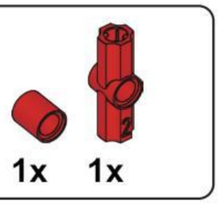


## B152

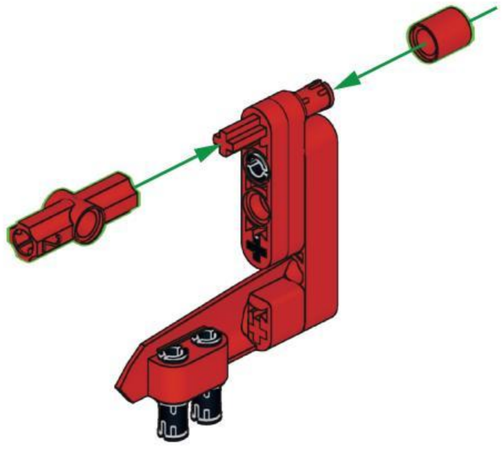

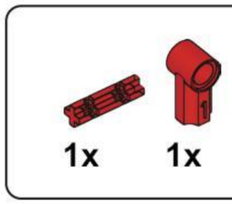


## B153

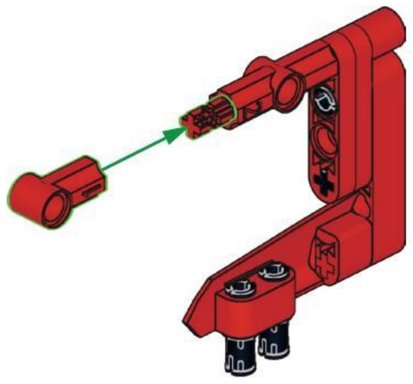

# B154

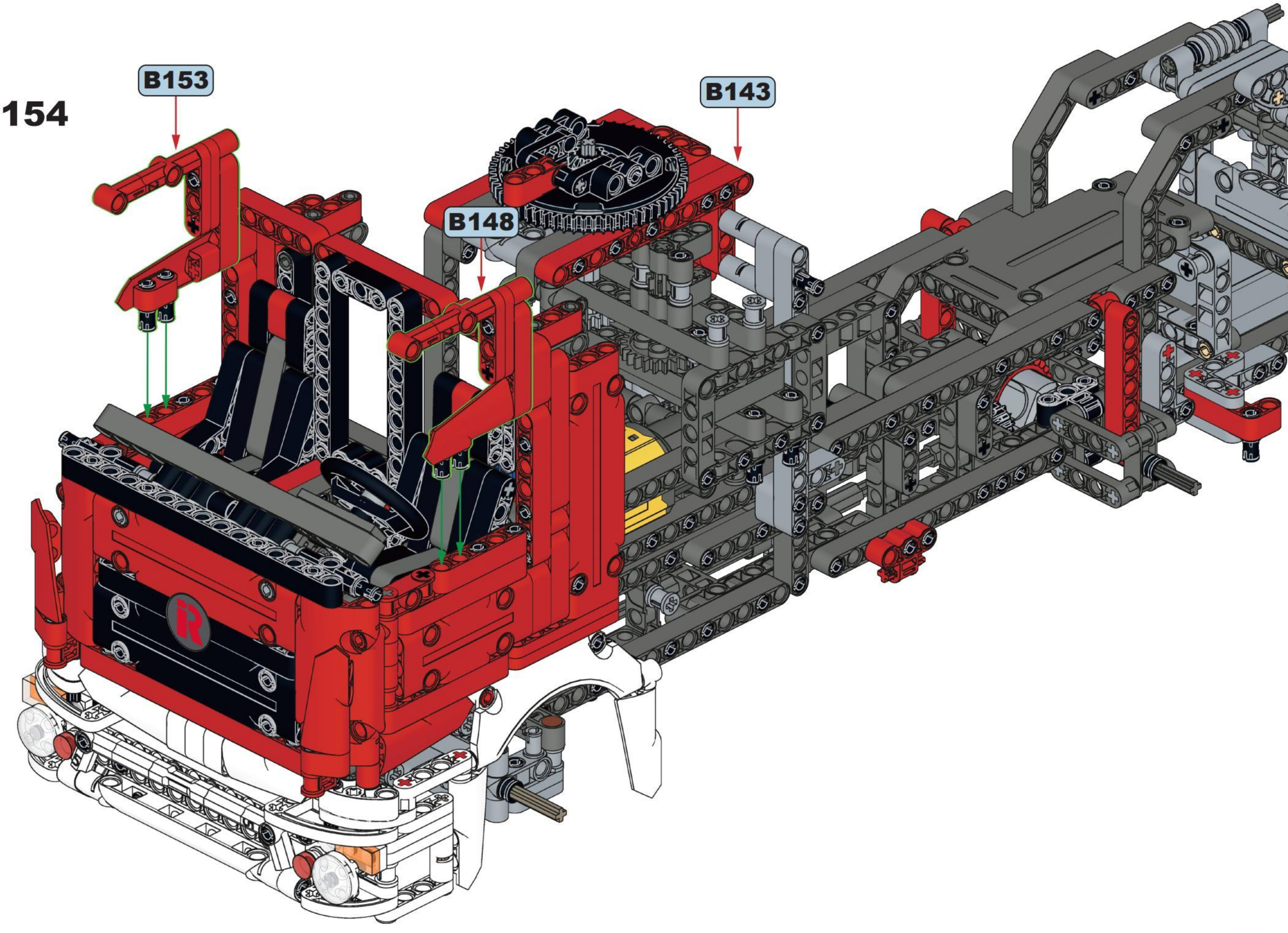

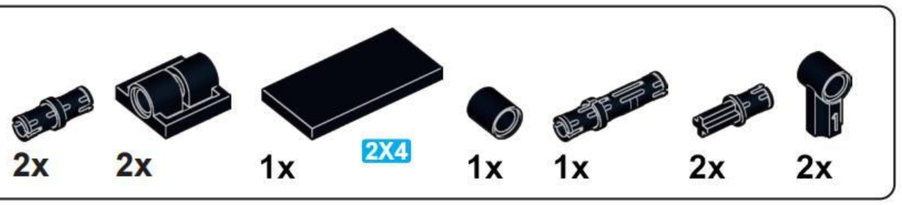


## B155

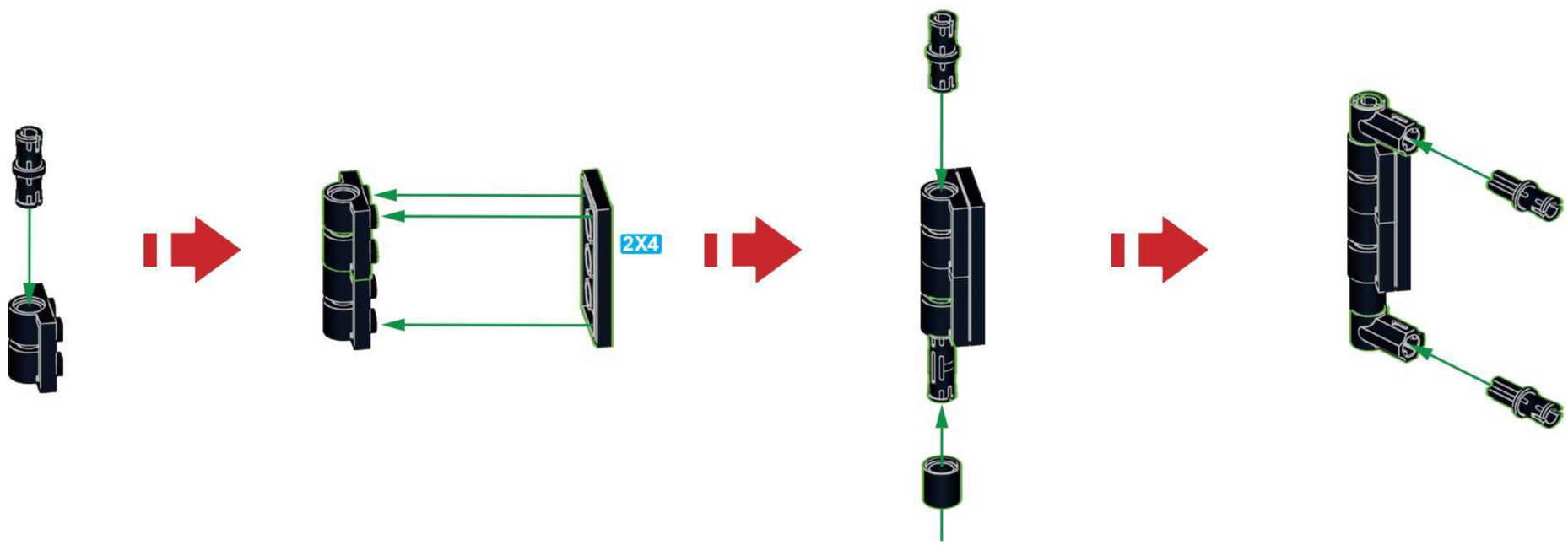


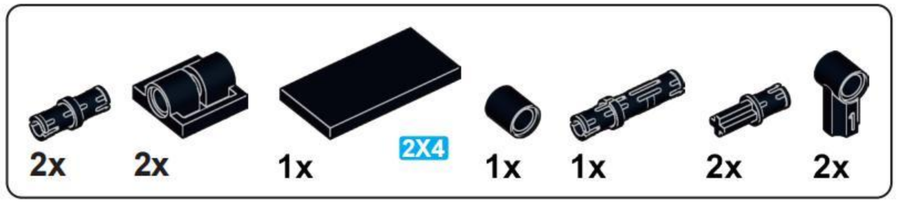


## B156

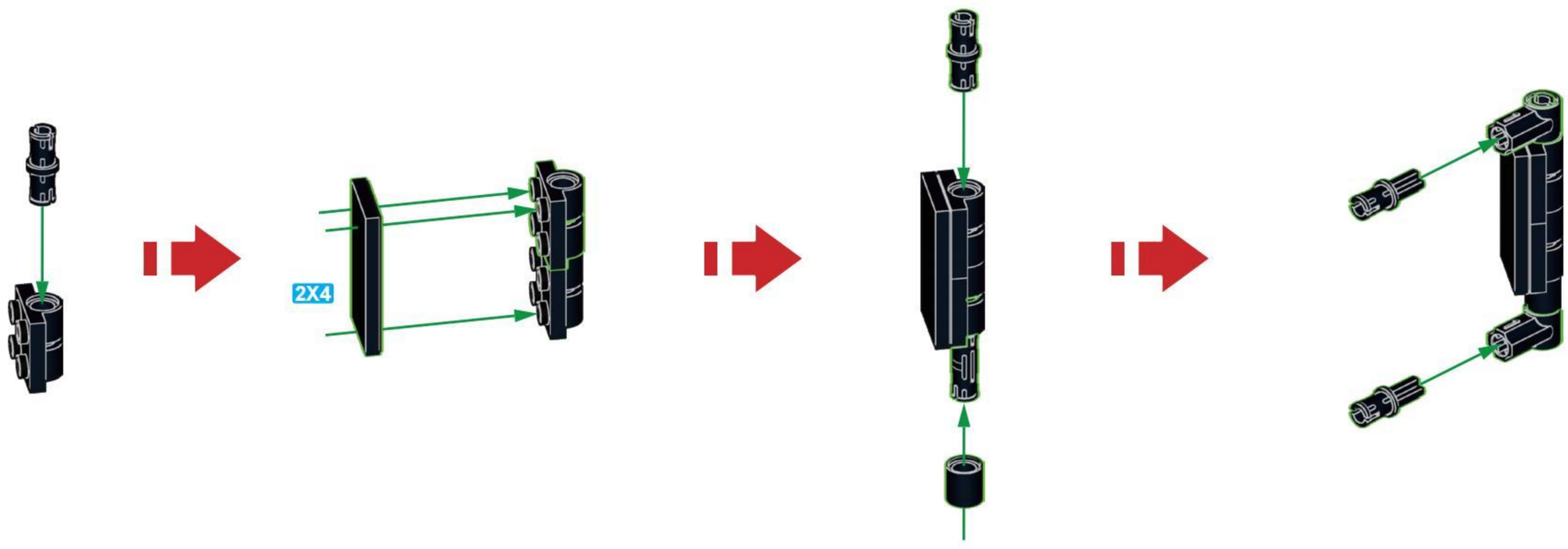

# B157

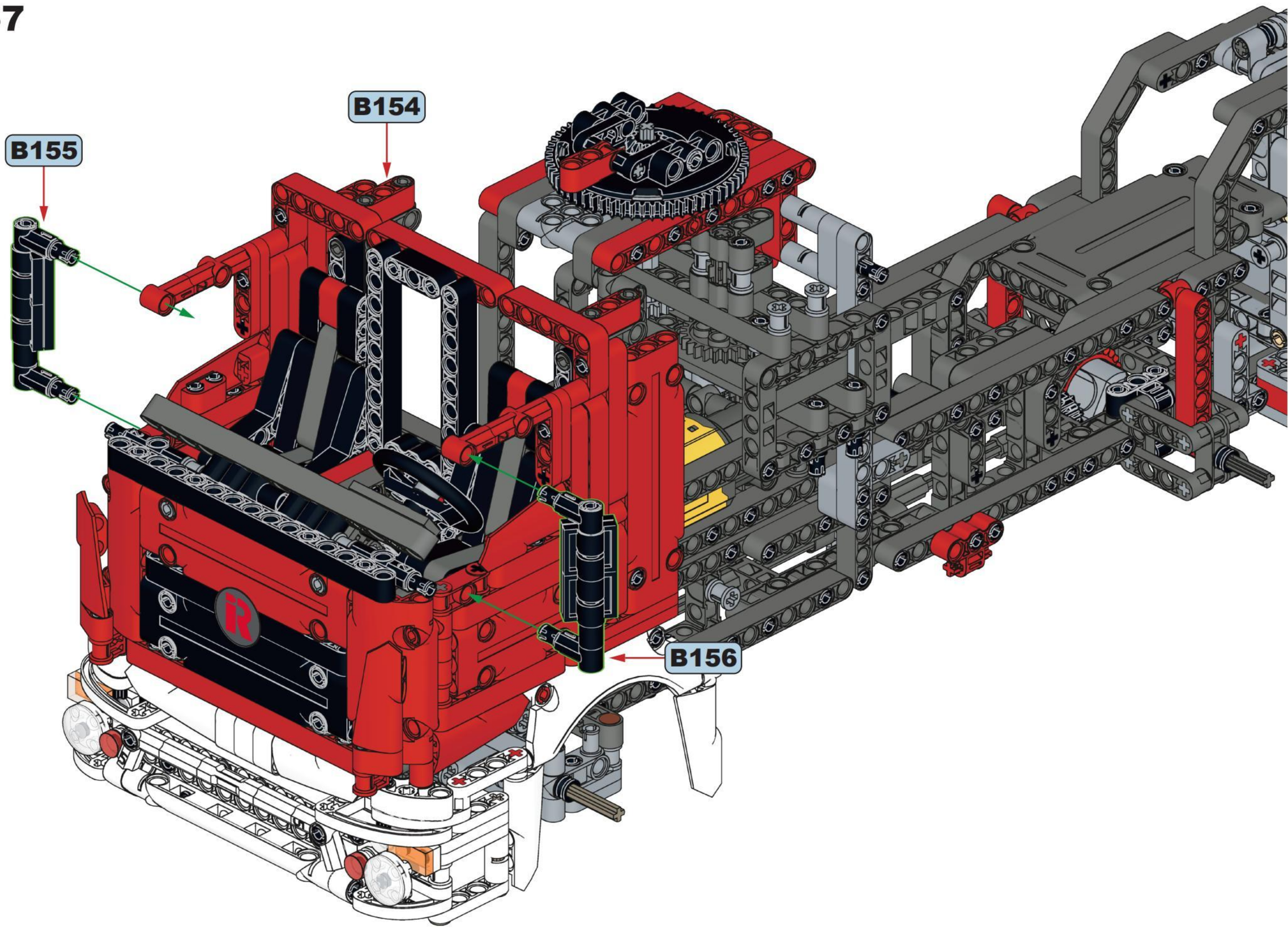

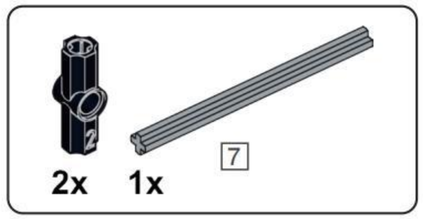


## B158

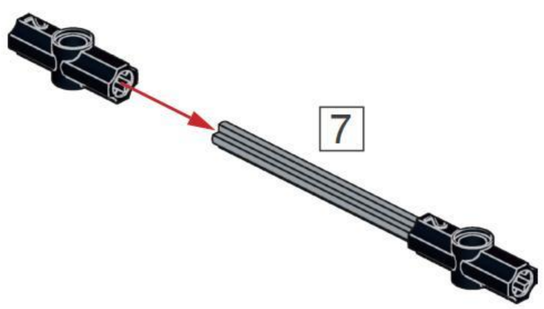


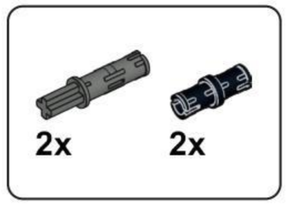


## B159

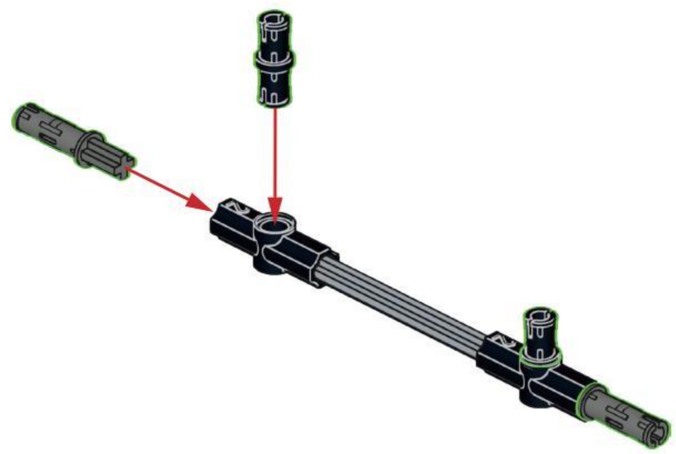

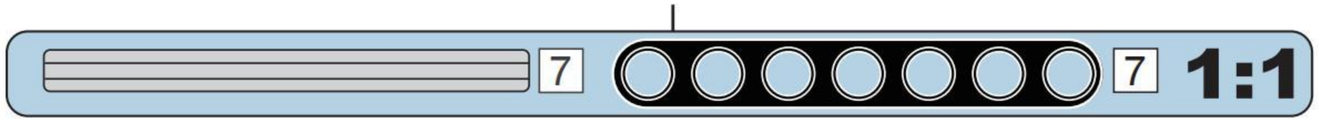


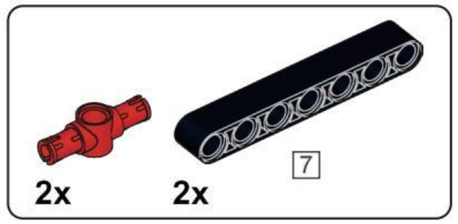


## B160

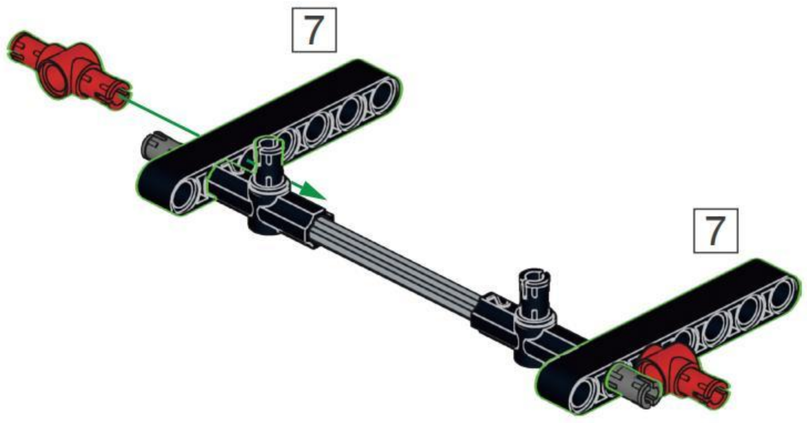


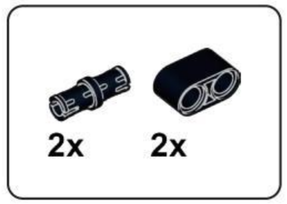


## B161

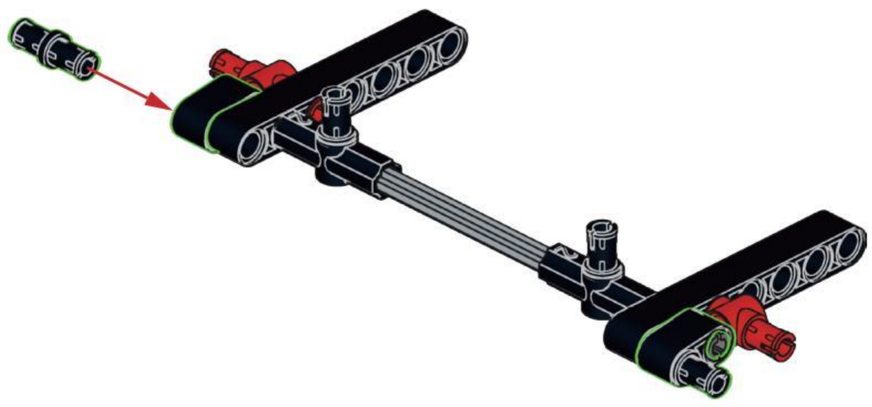

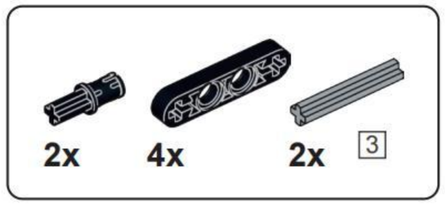


## B162

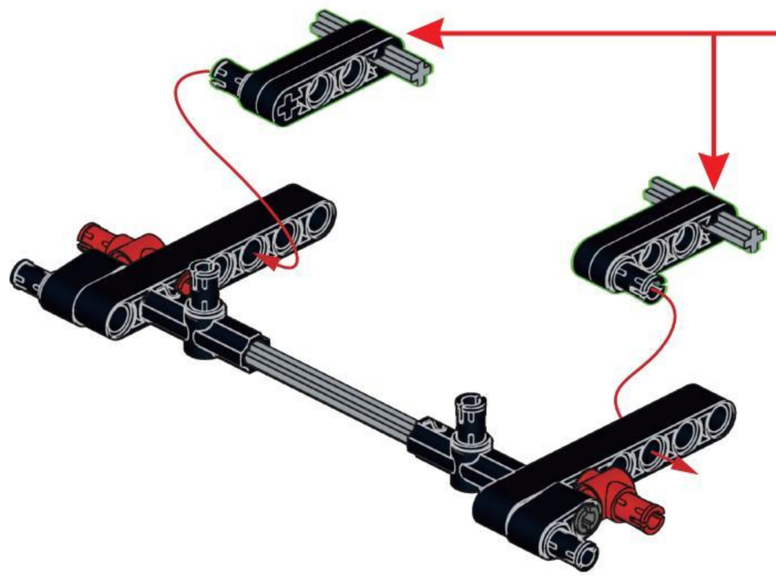

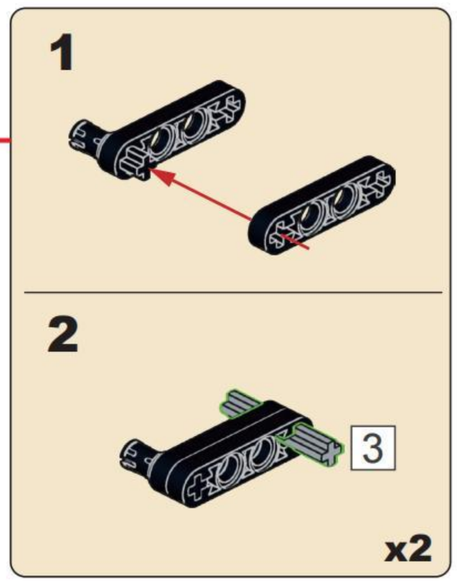


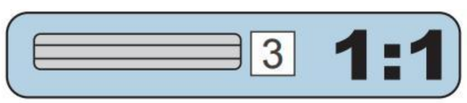


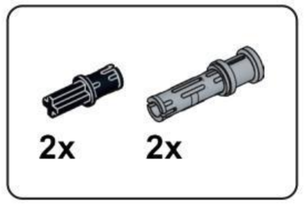


## B163

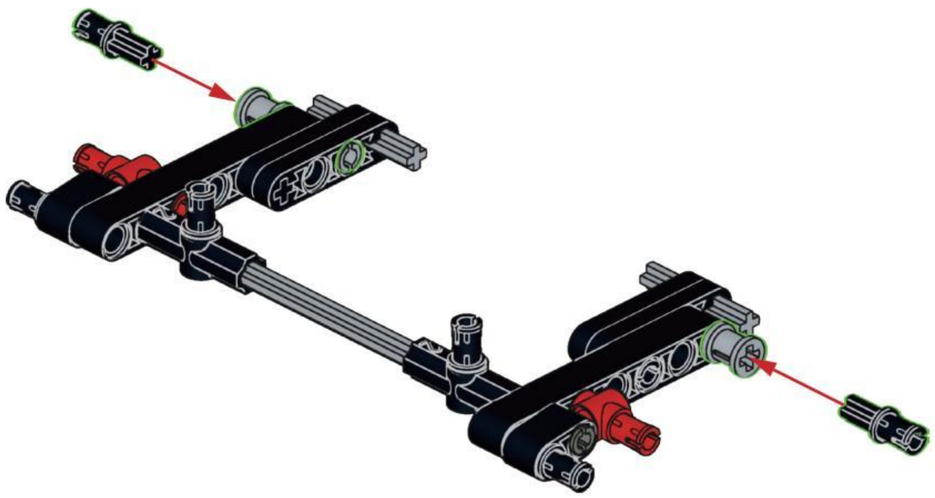

## B164

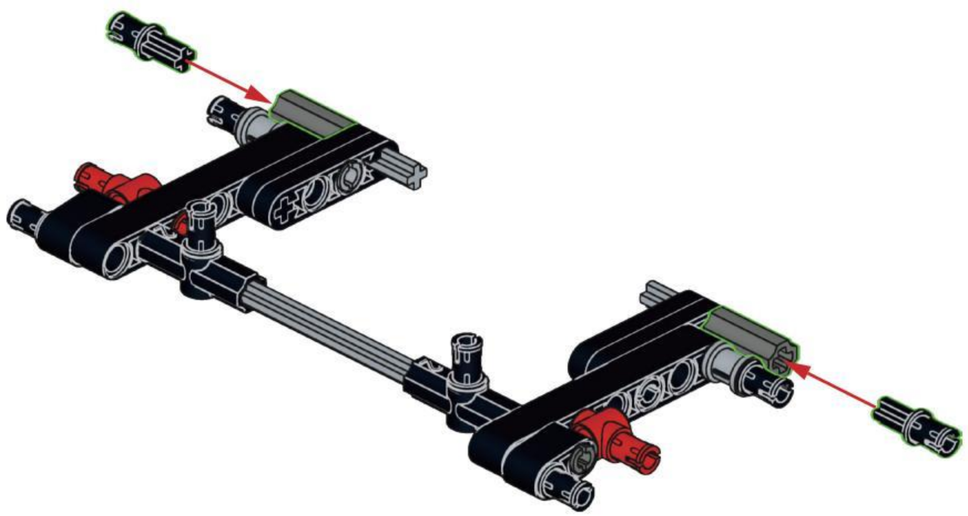

## B165

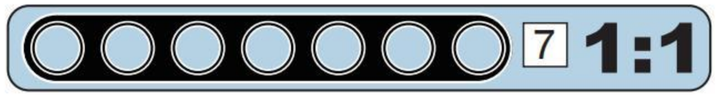


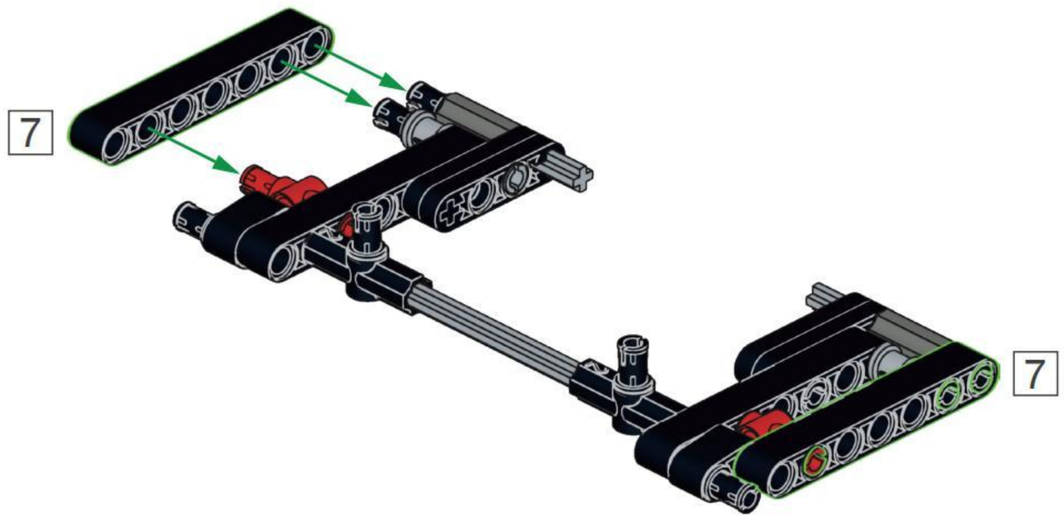

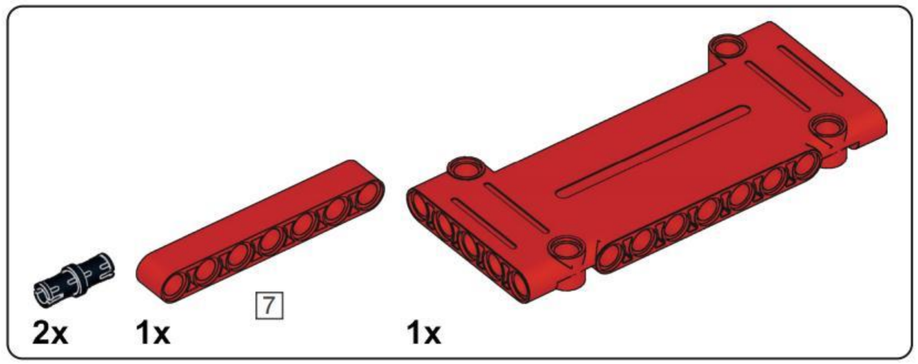


# B166

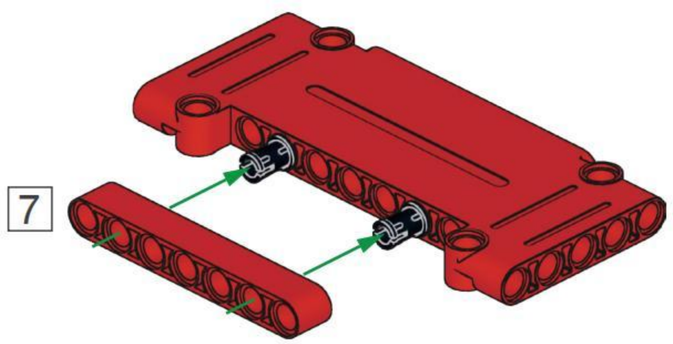


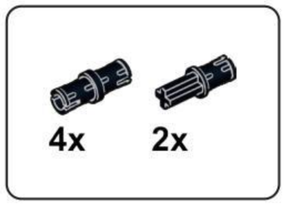


# B167

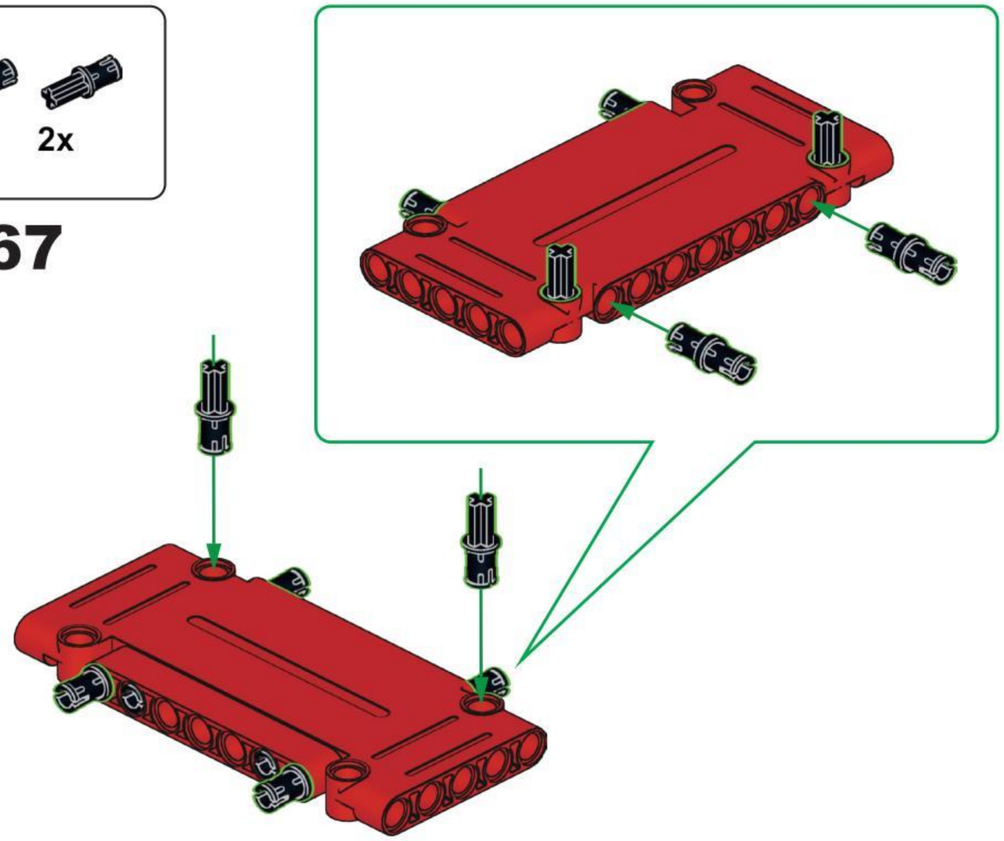

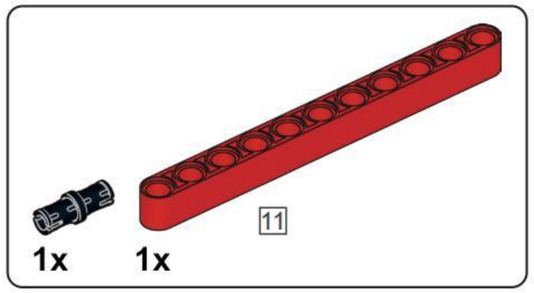


# B168

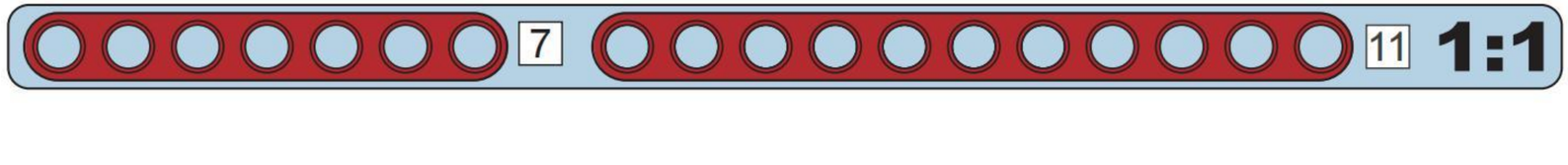


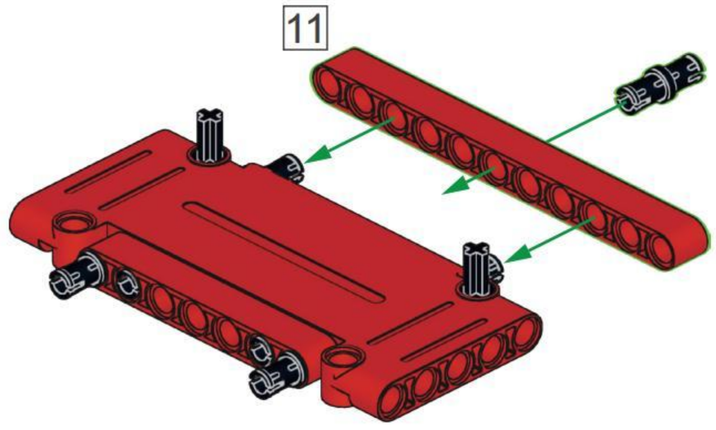

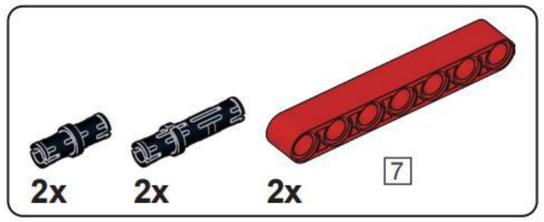


## B169

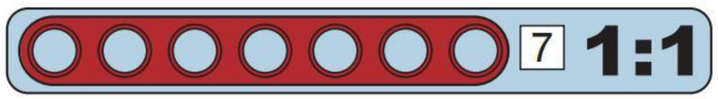


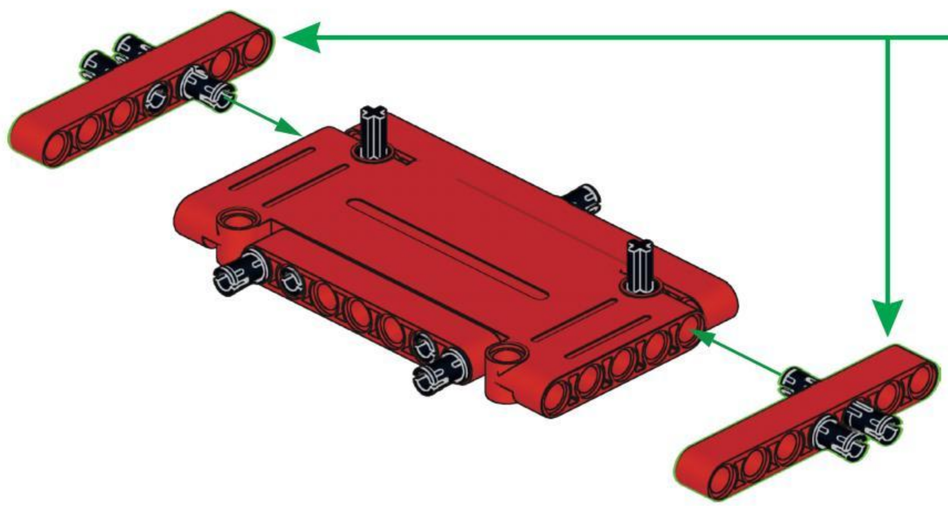

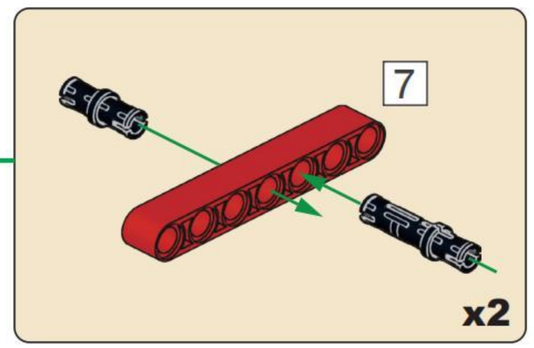


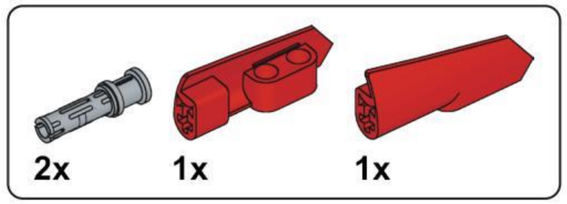


## B170

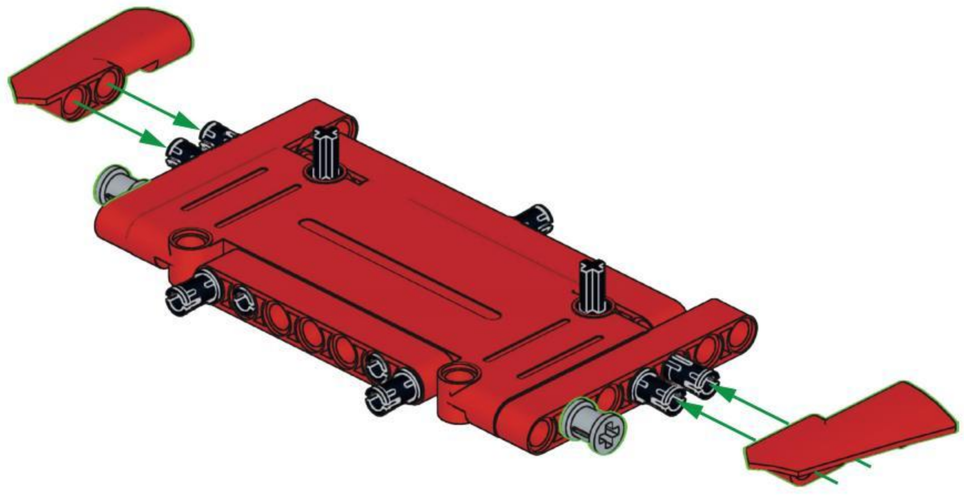

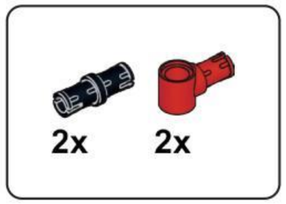


## B171

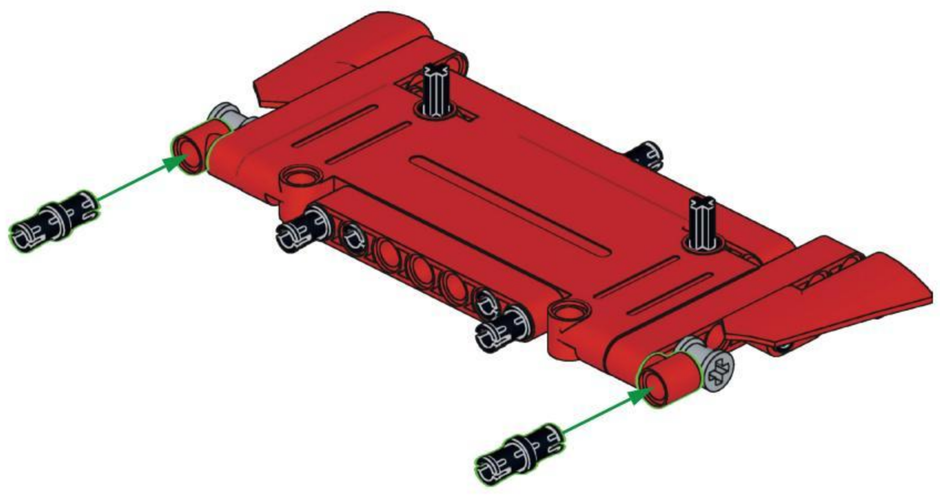

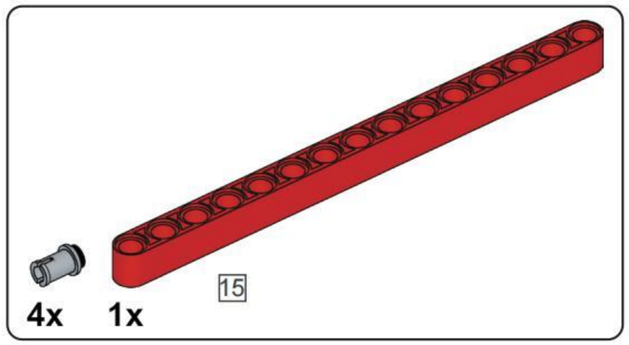


## B172

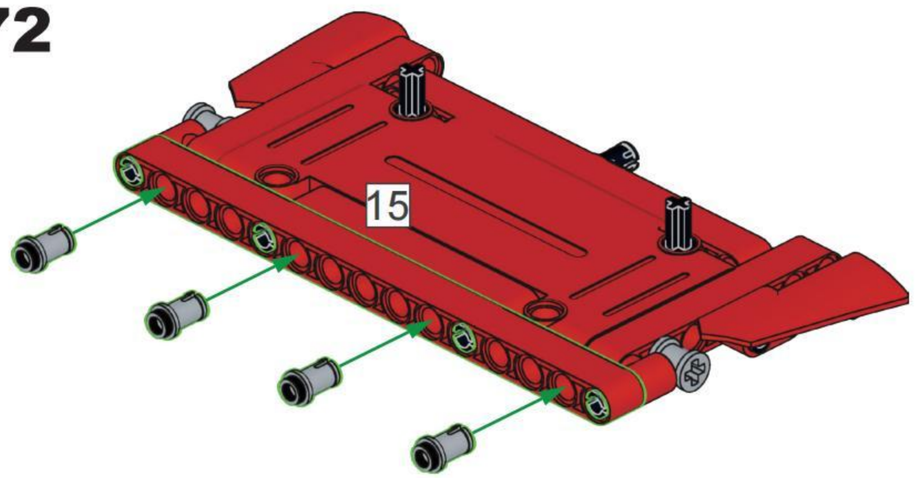


## B173

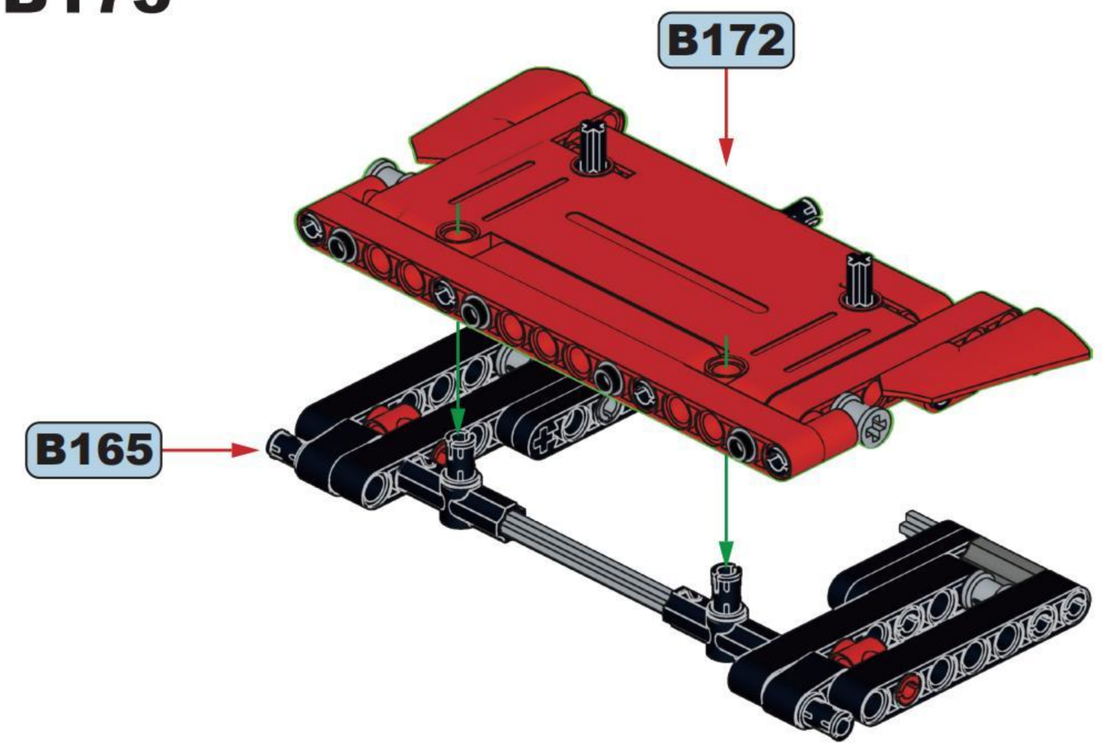


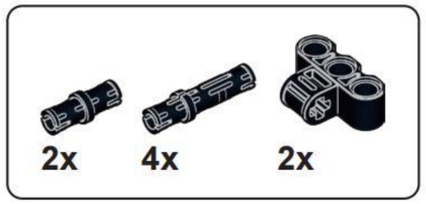


## B174

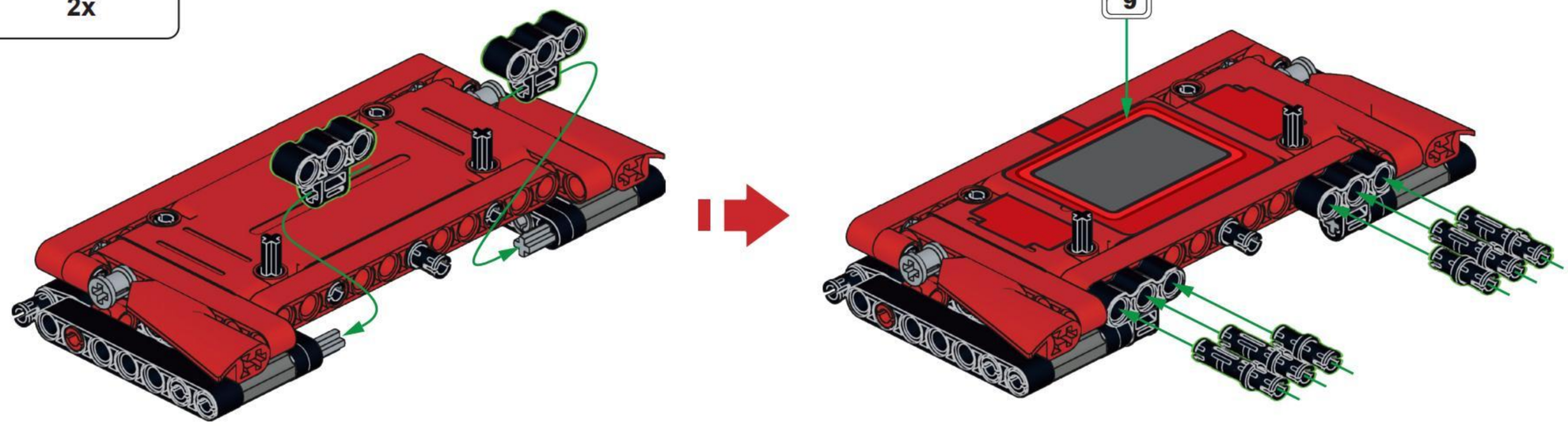


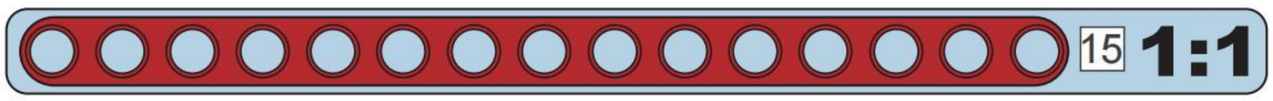

# B175

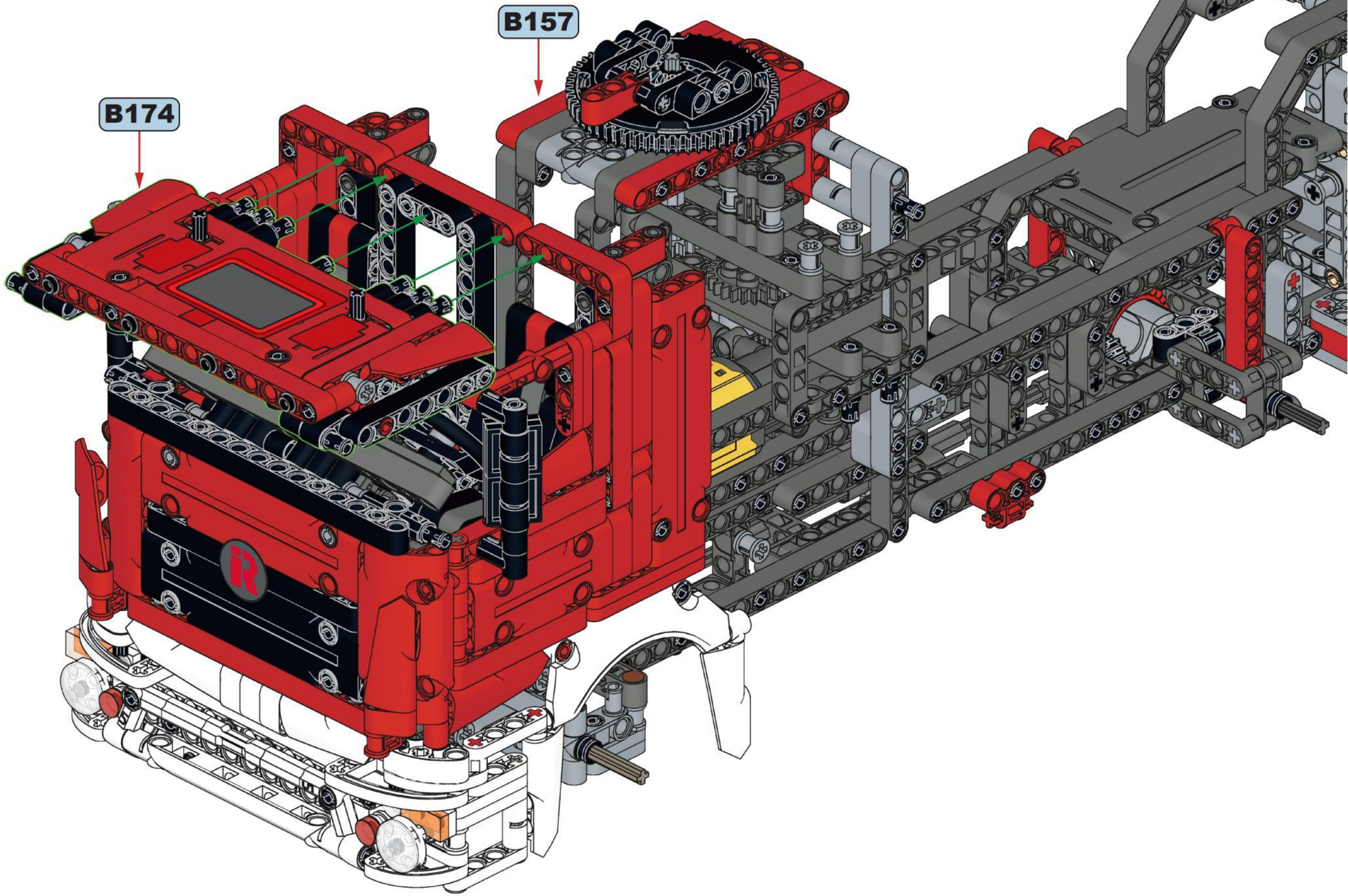

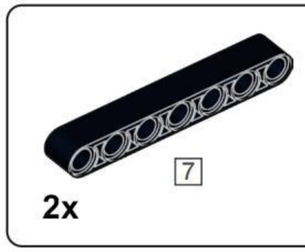





# B176

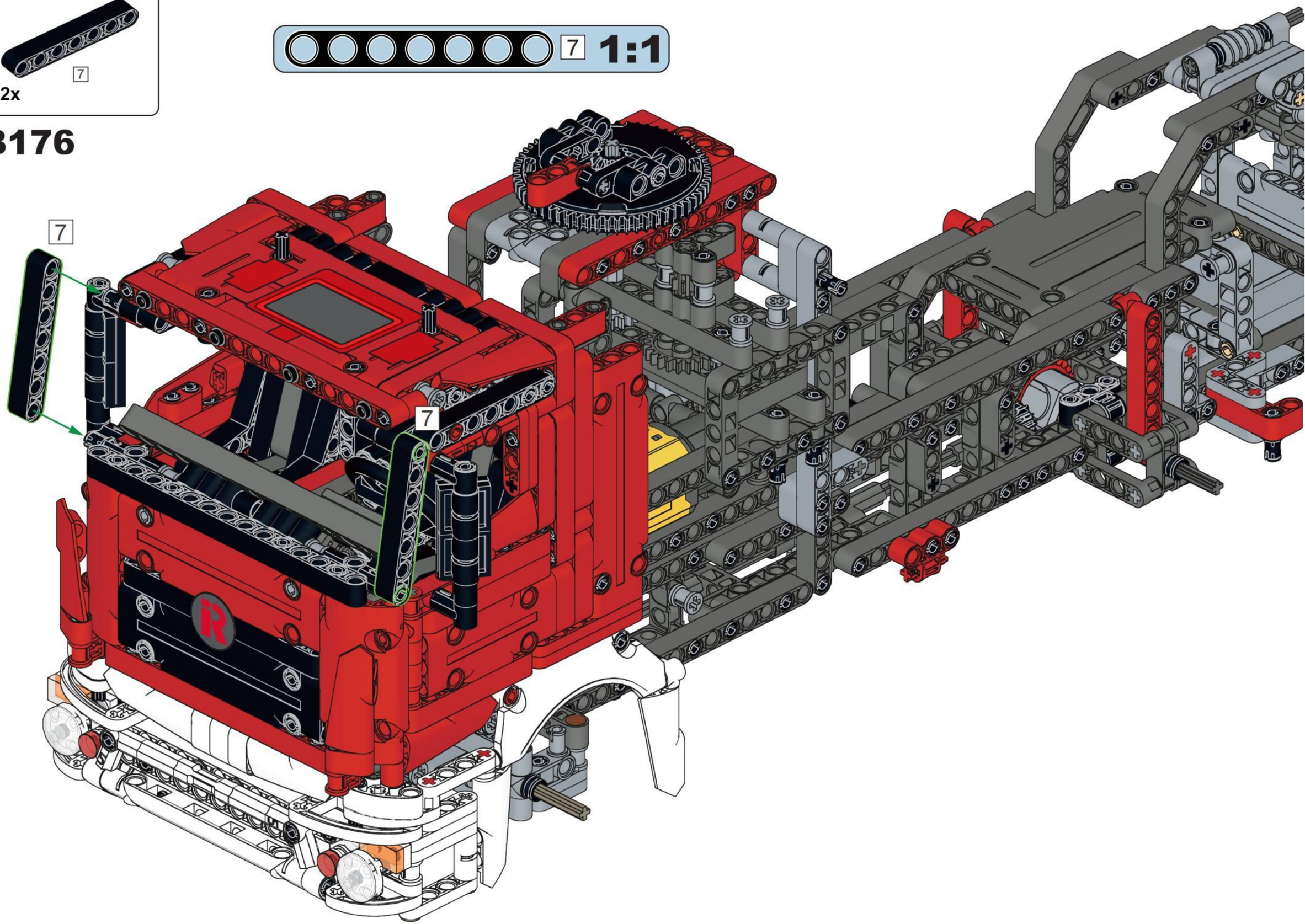

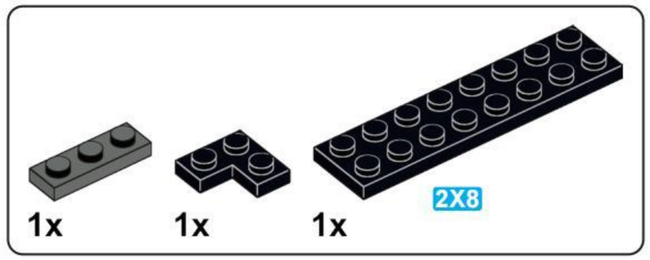


## B177

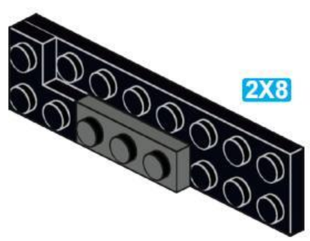


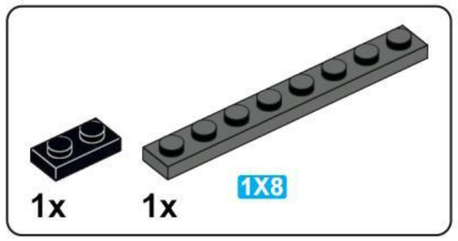


## B178

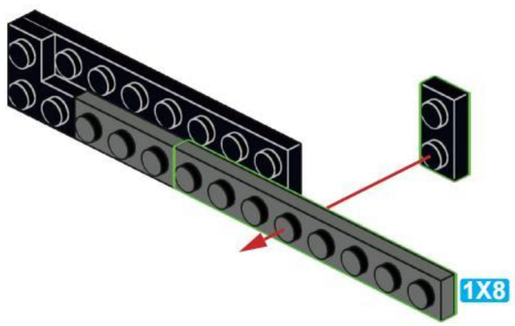


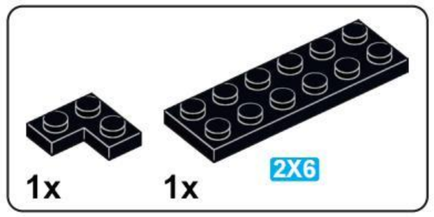


## B179

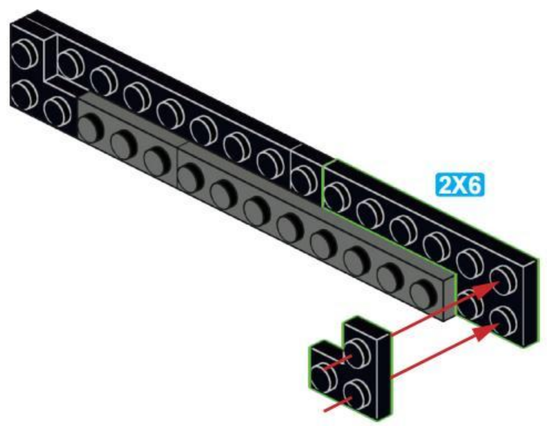


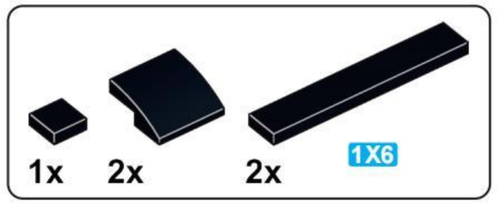


## B180

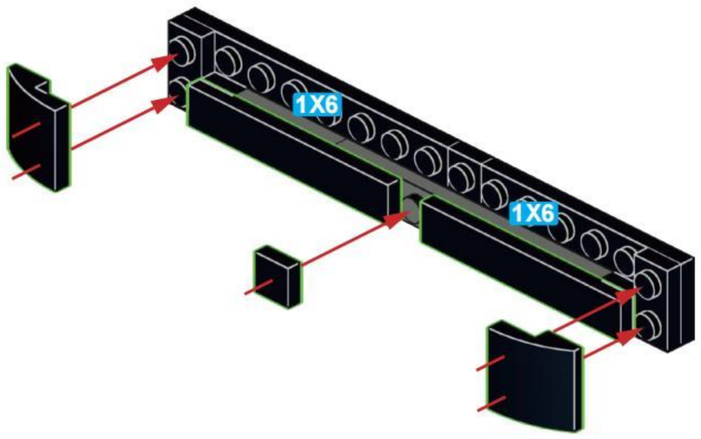


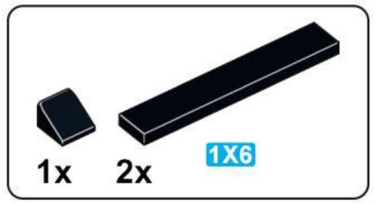


## B181

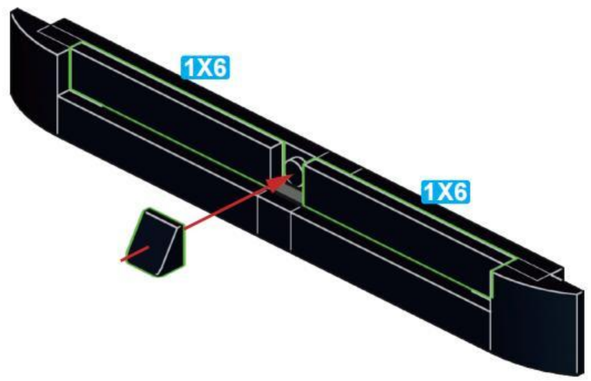

# B182

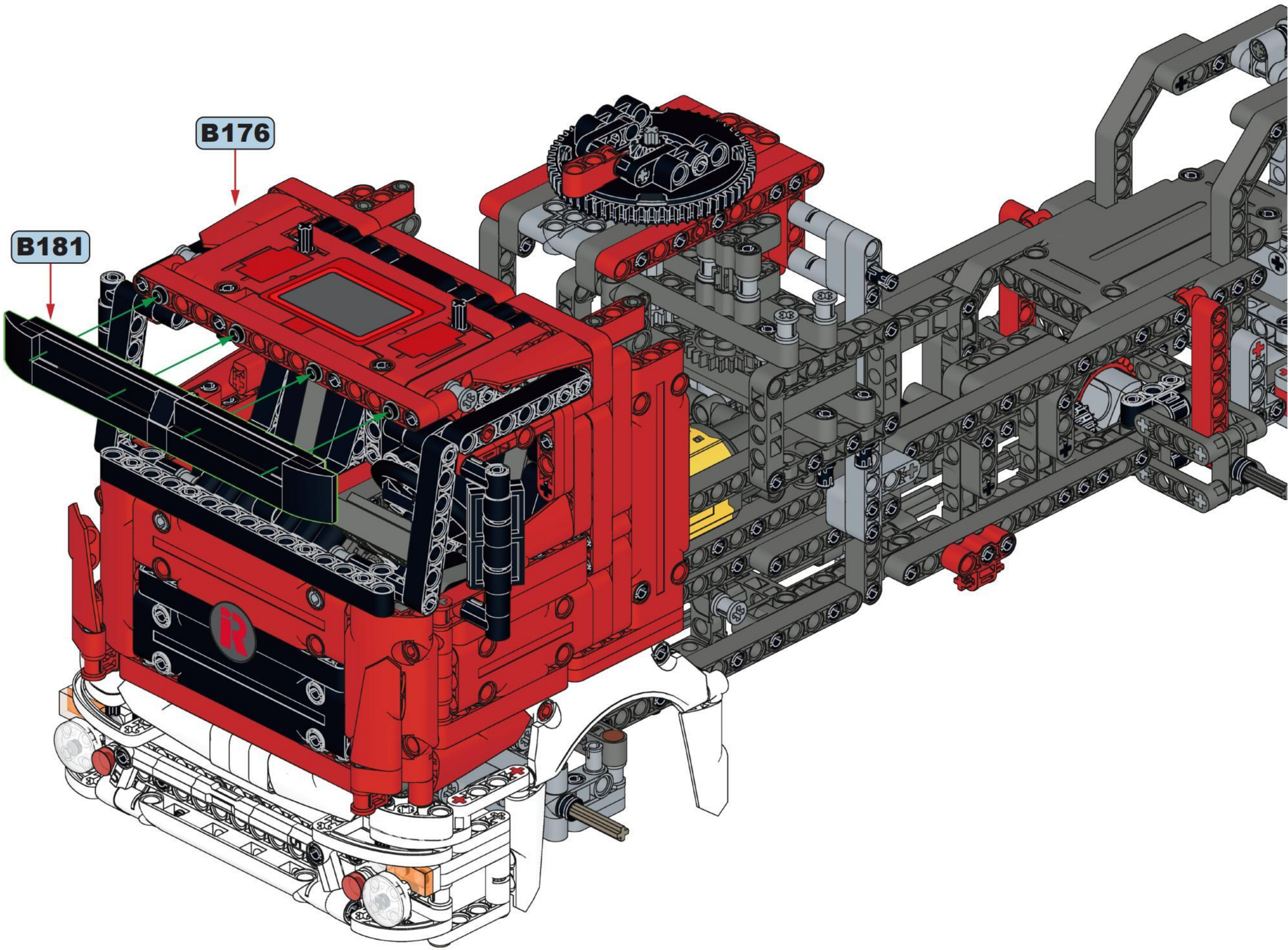

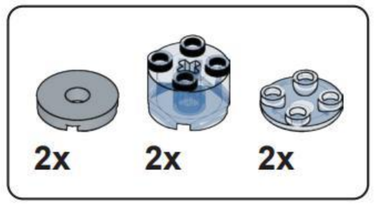


# B183

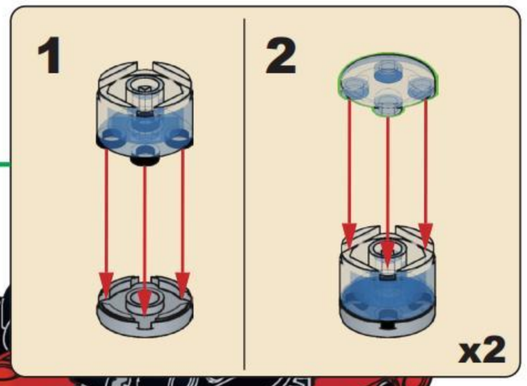

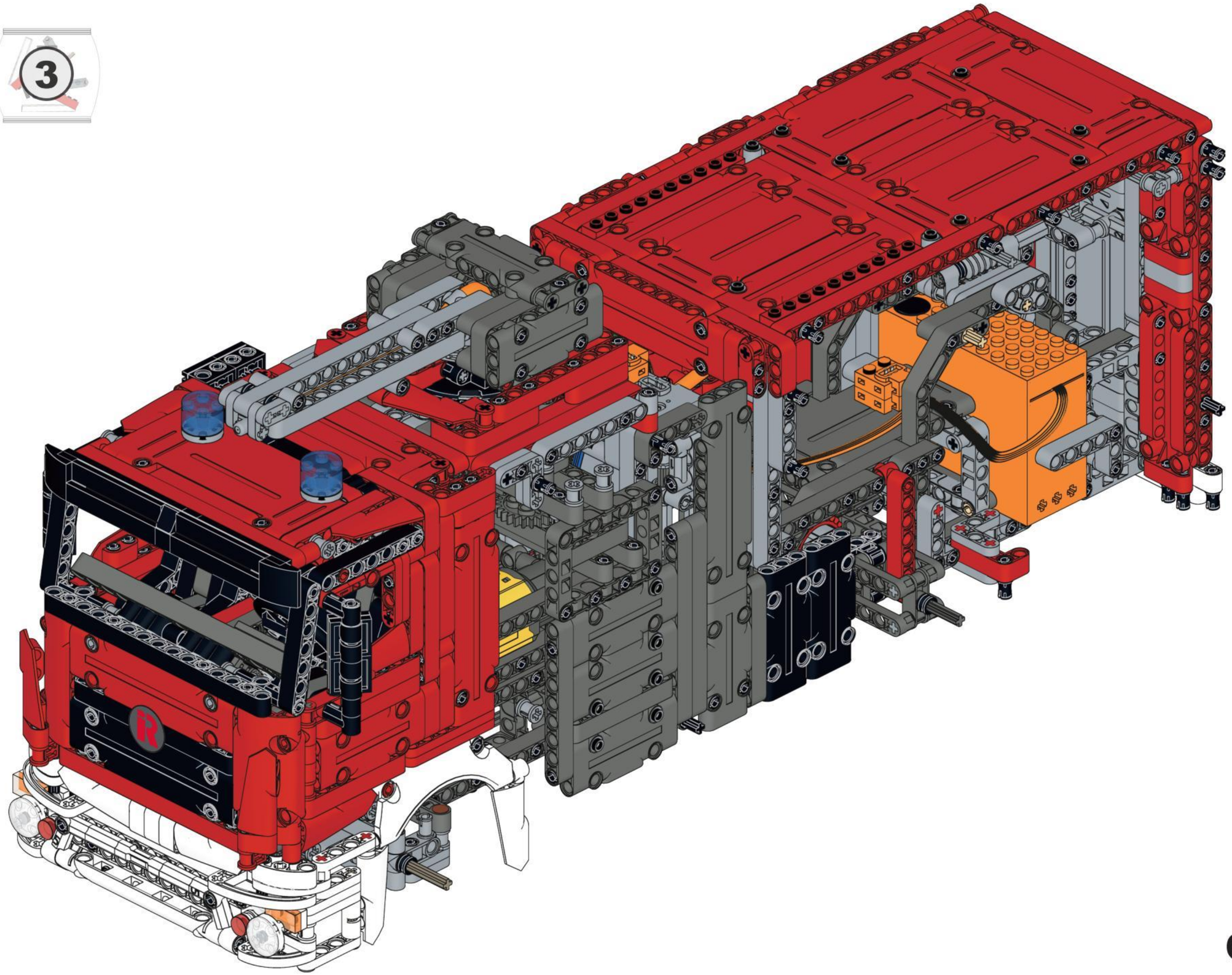

C

4x

# C1

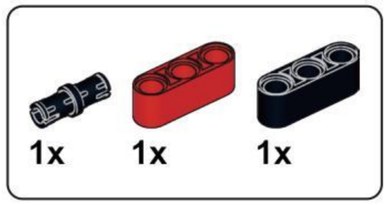


## C2

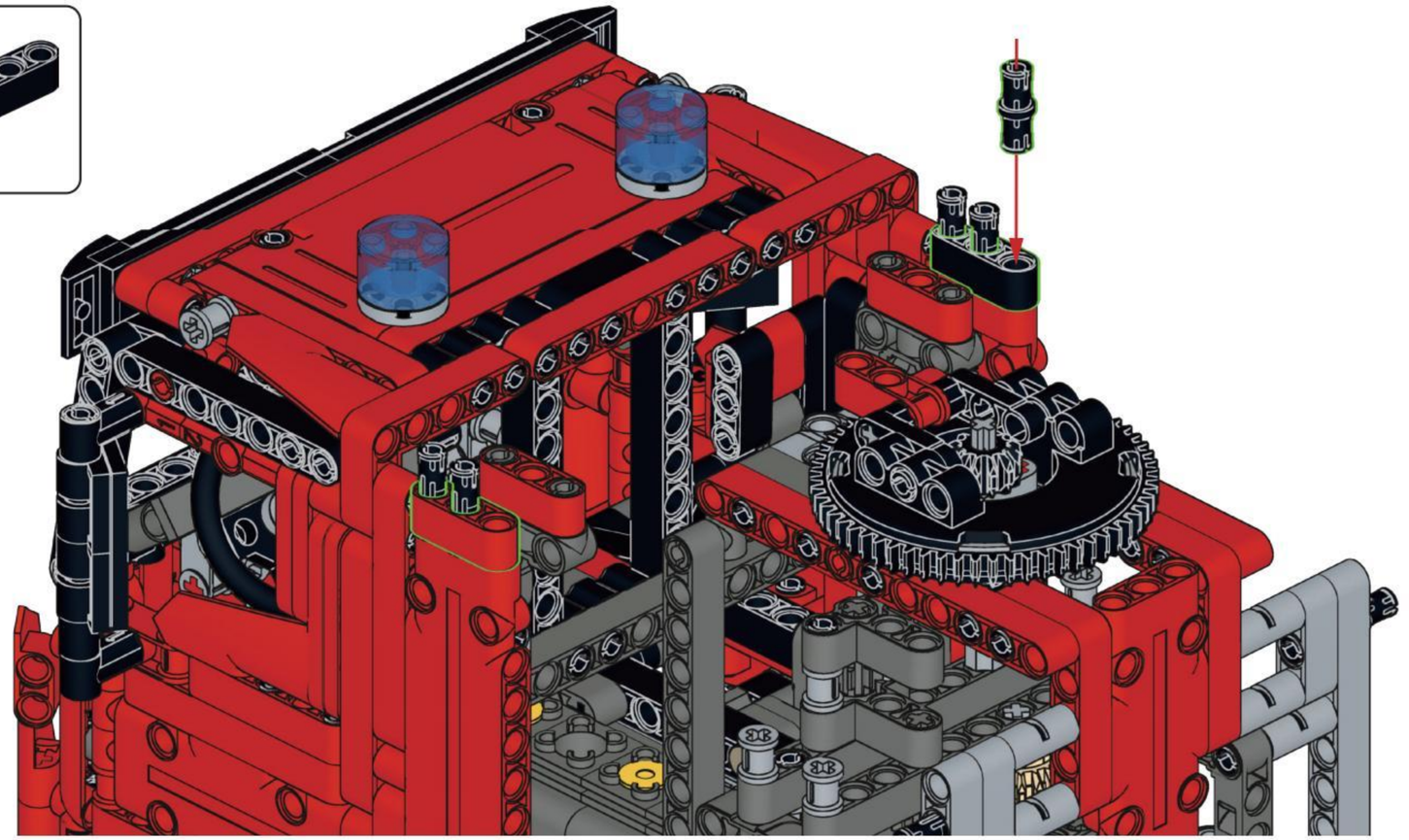

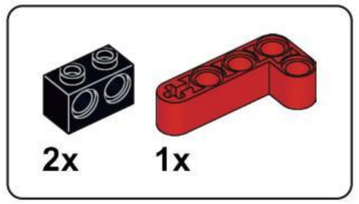


## C3

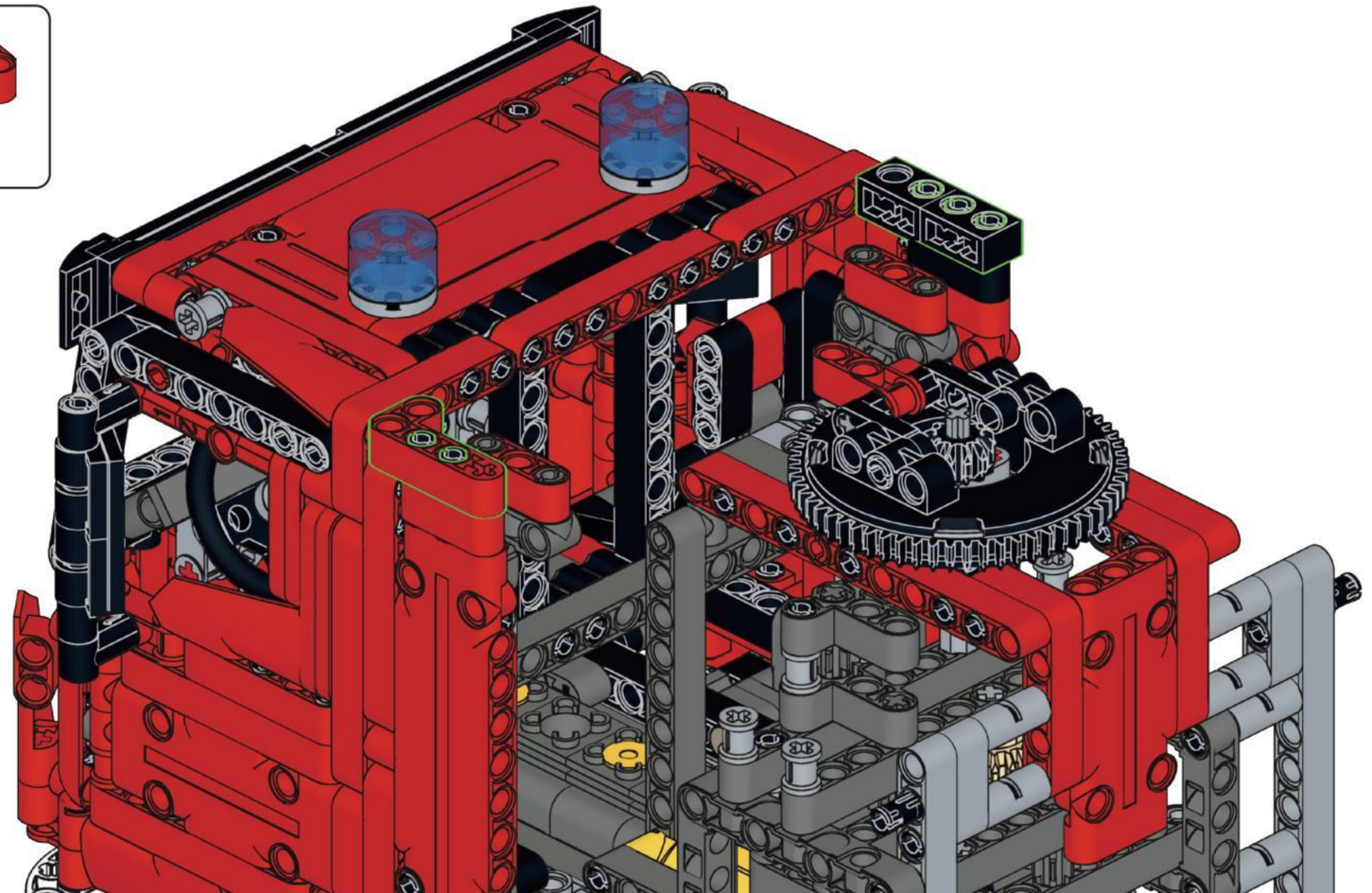

2x

# C4

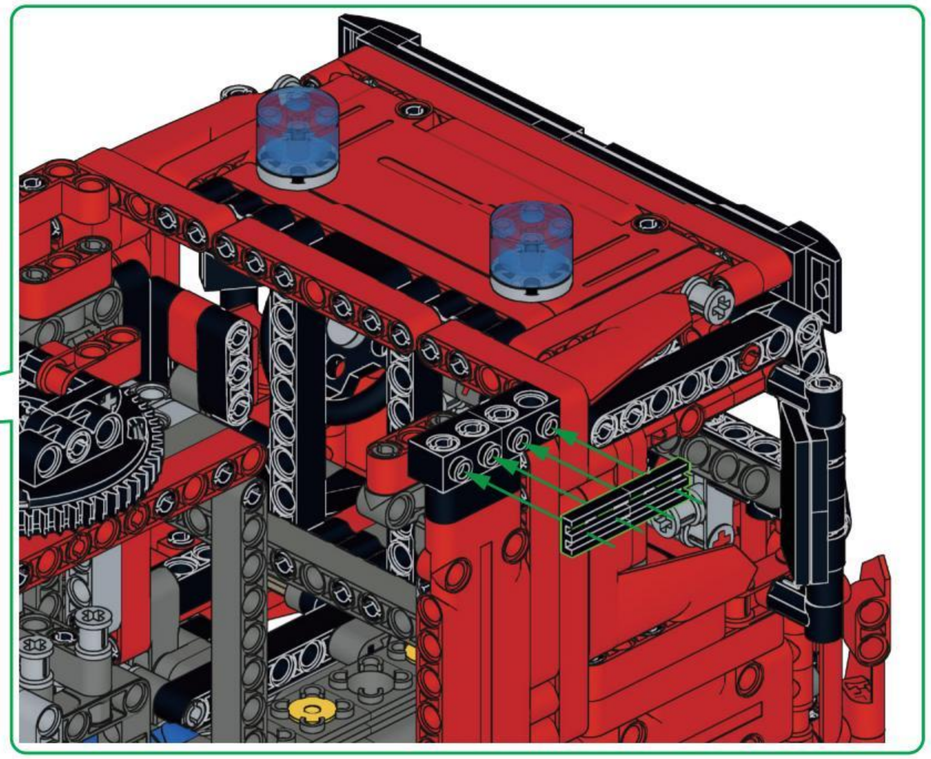

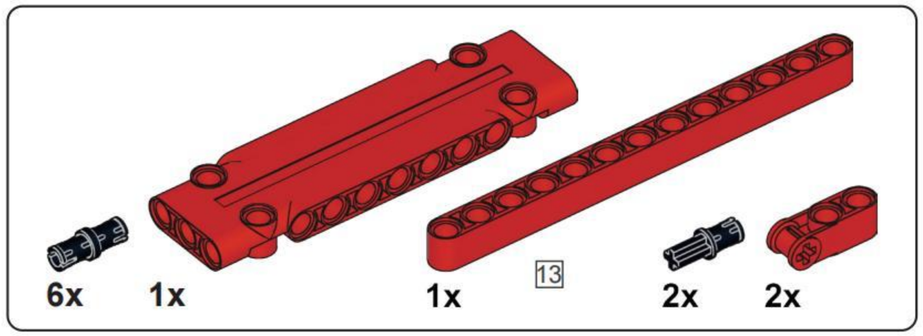


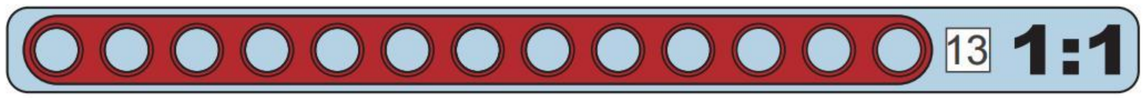


## C5

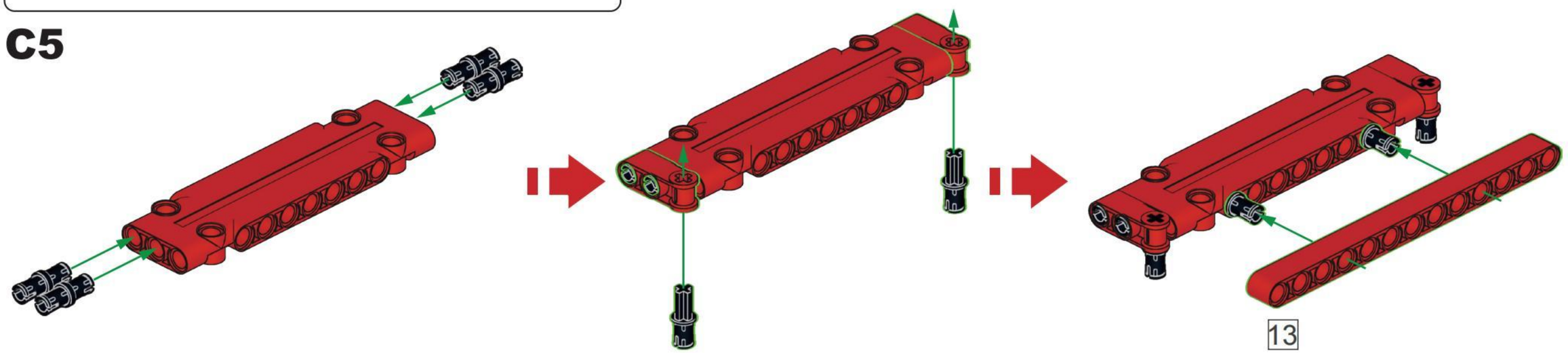


## C6

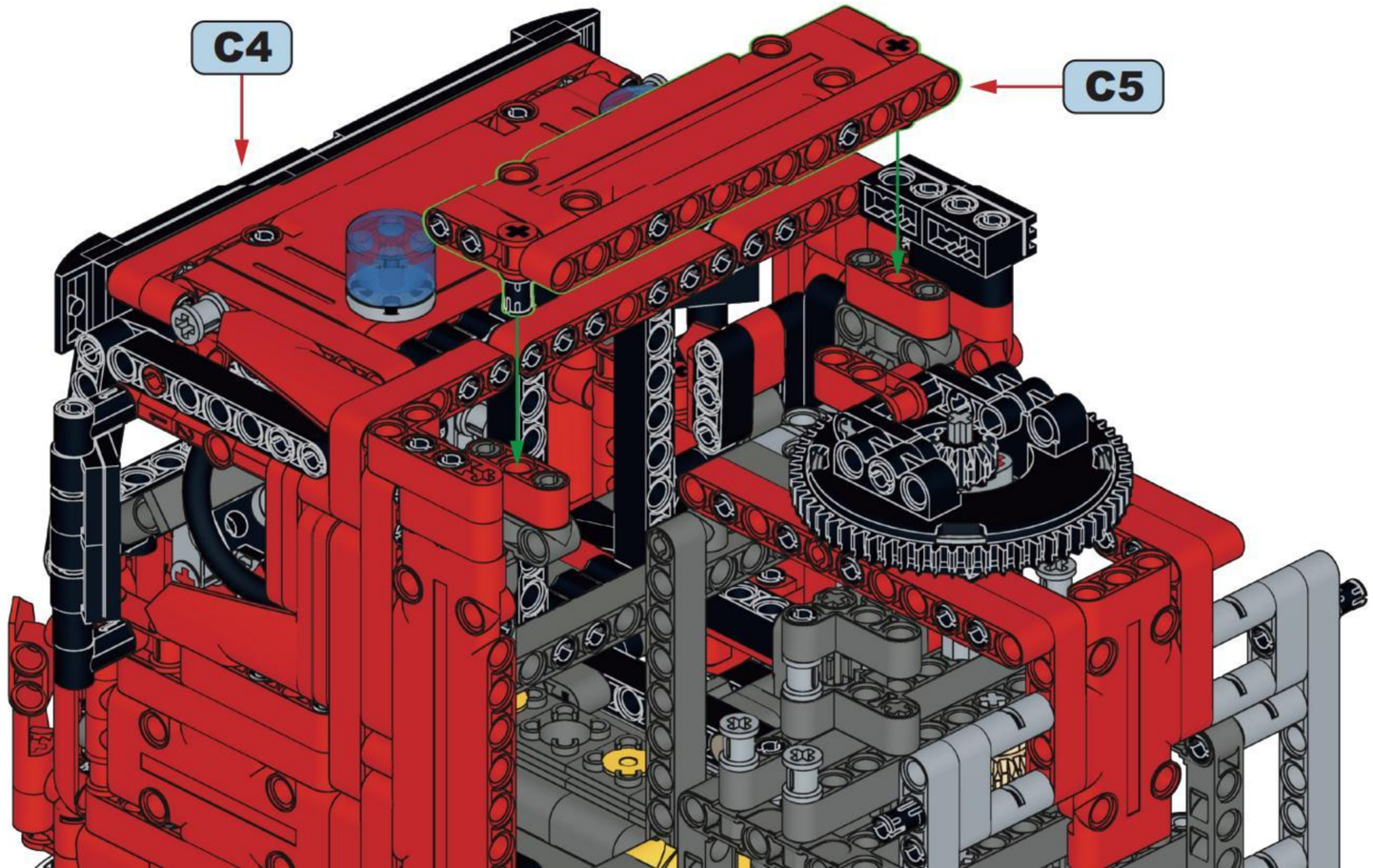

2x 2x 2x

C7

x2

2x 2x

C8

4x 4x 4x 4x 4x 4

4 1:1

## C9

4 4

x2

C10

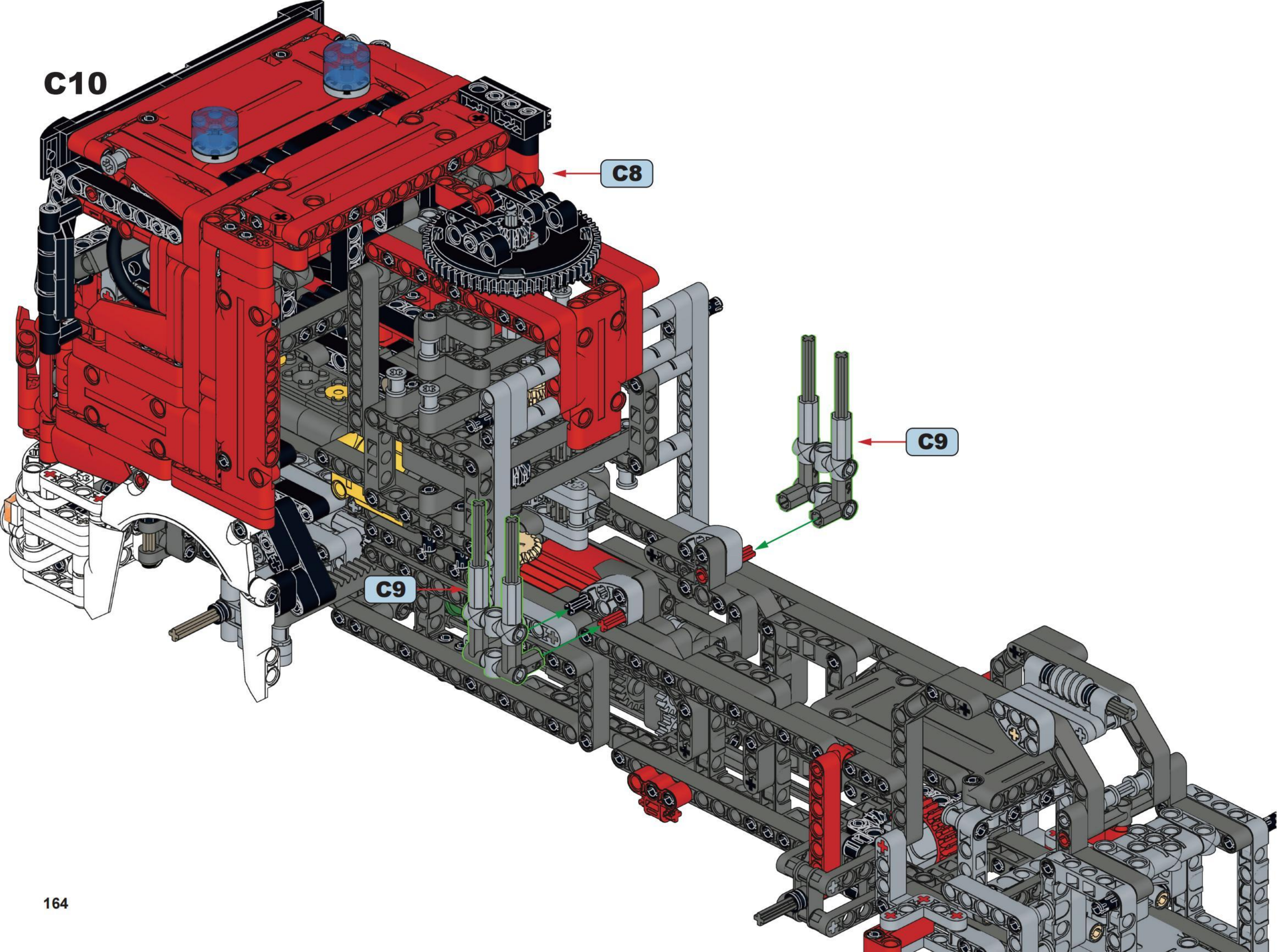

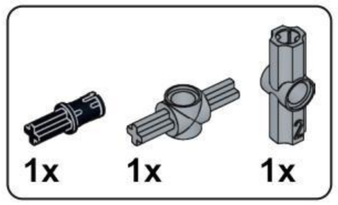


## C11

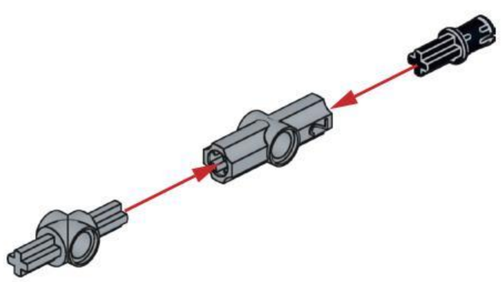

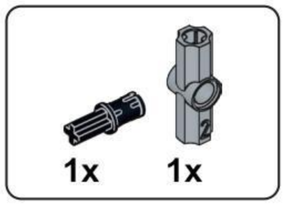


## C12

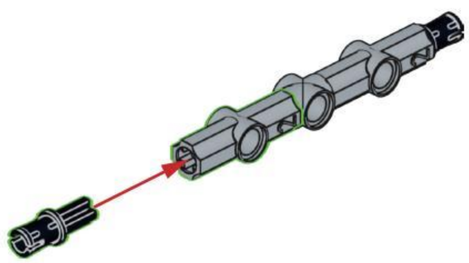

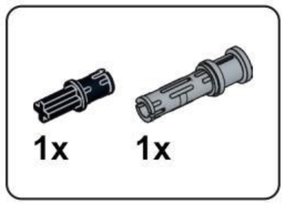


## C13

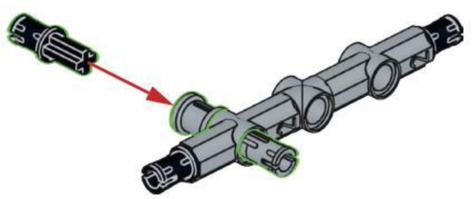

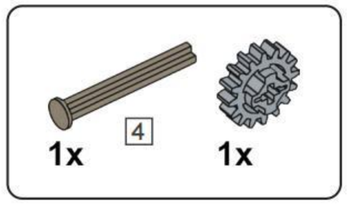


## C14

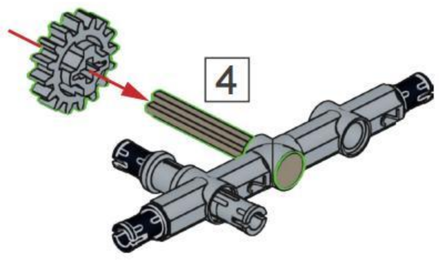


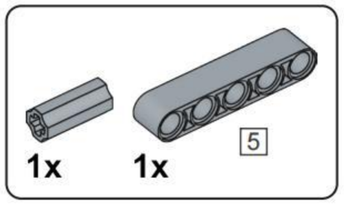


## C15

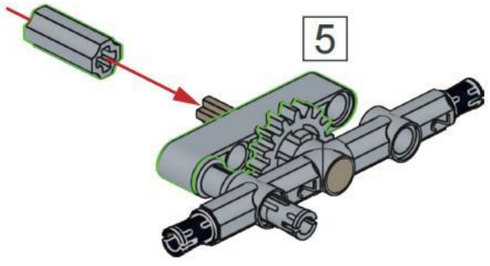


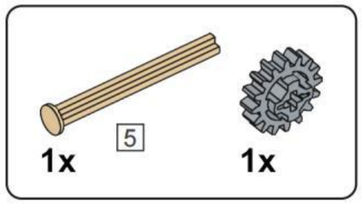


## C16

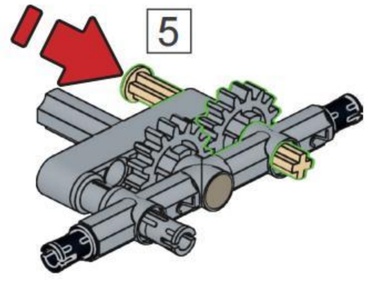


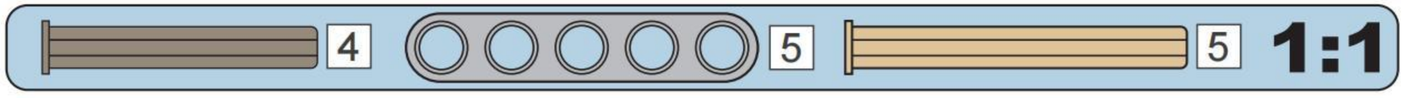

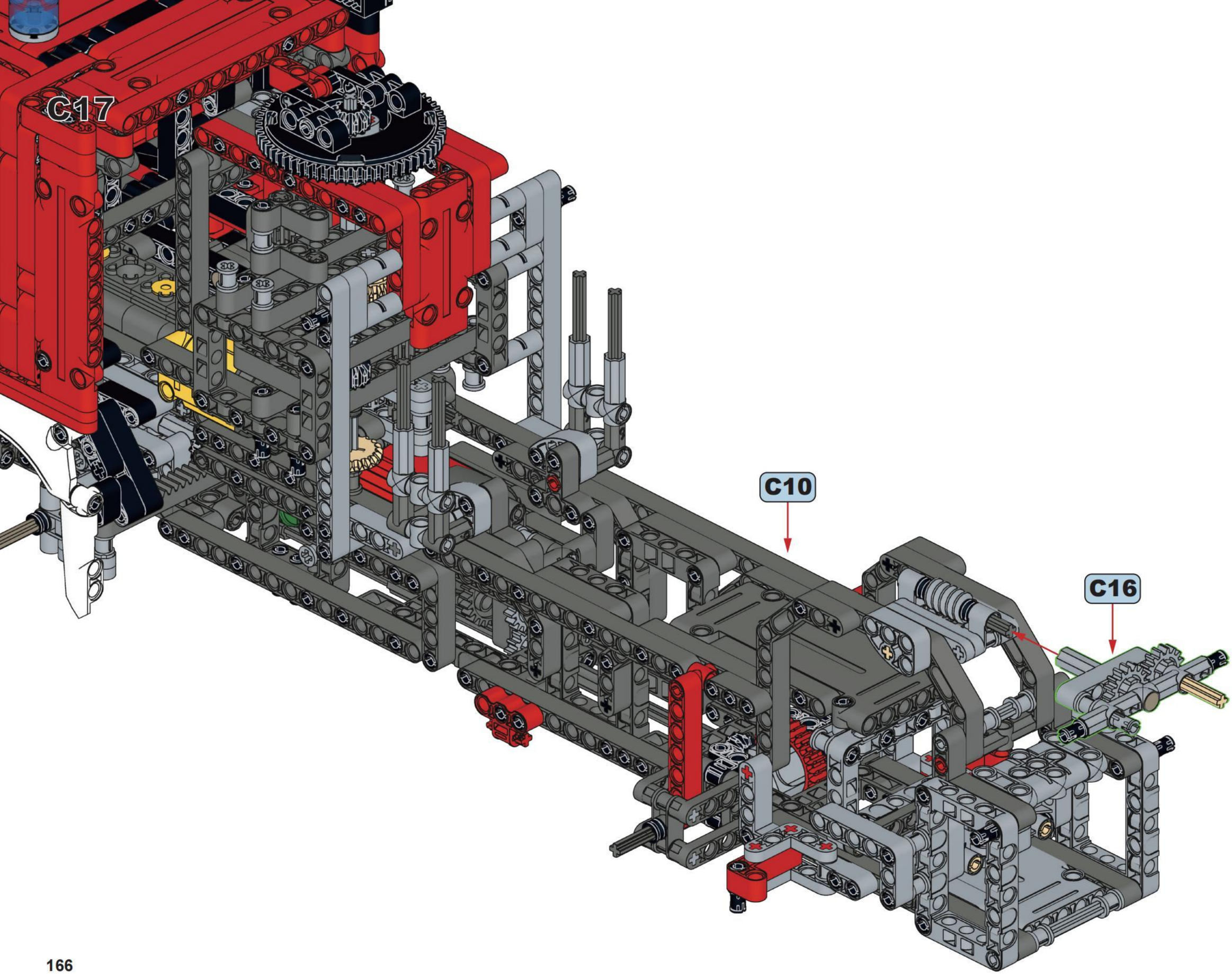
C17
C10
C16

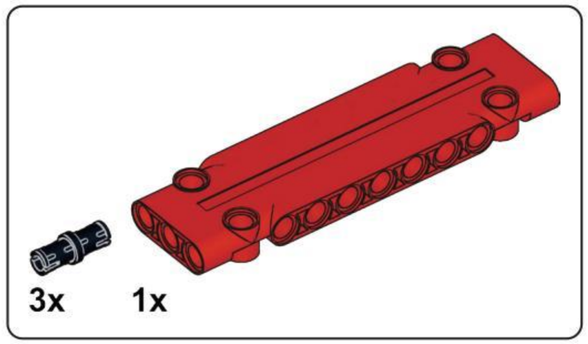


## C18

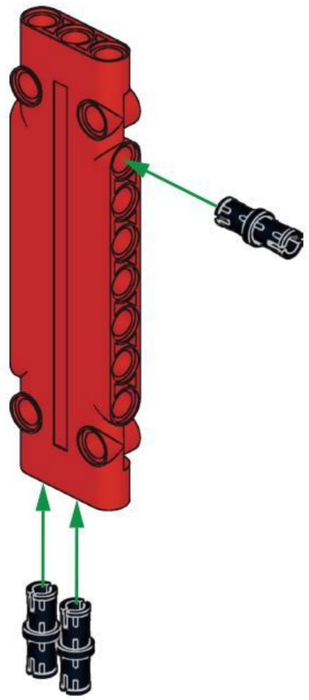

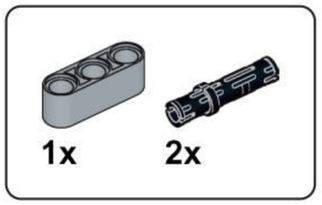


## C19

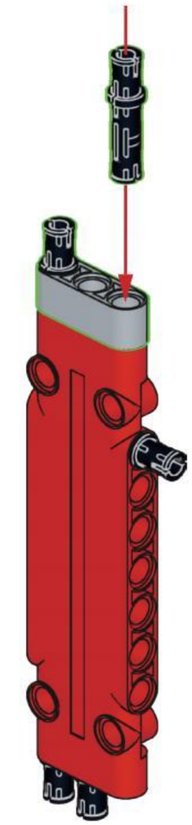

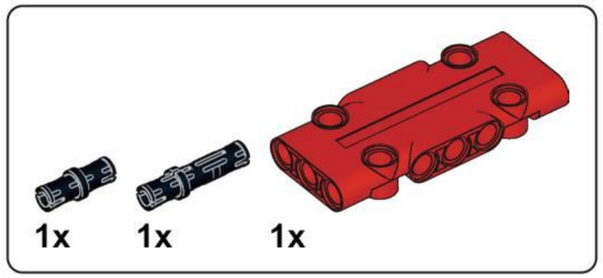


## C20

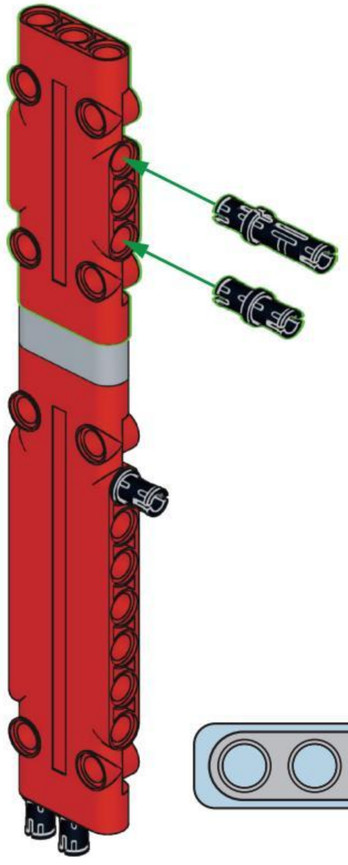

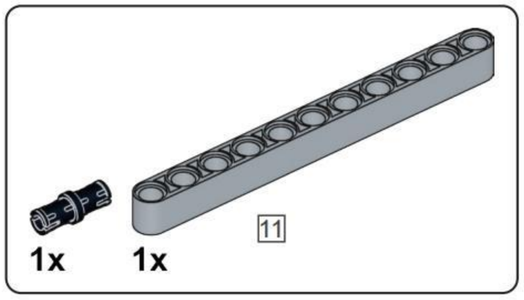


## C21

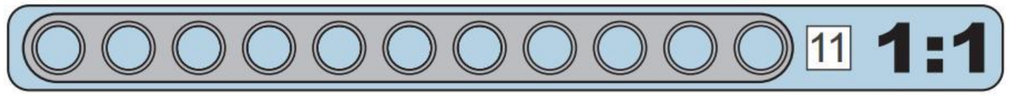


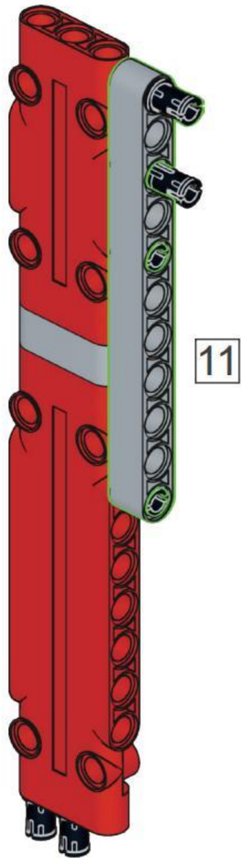

# C22

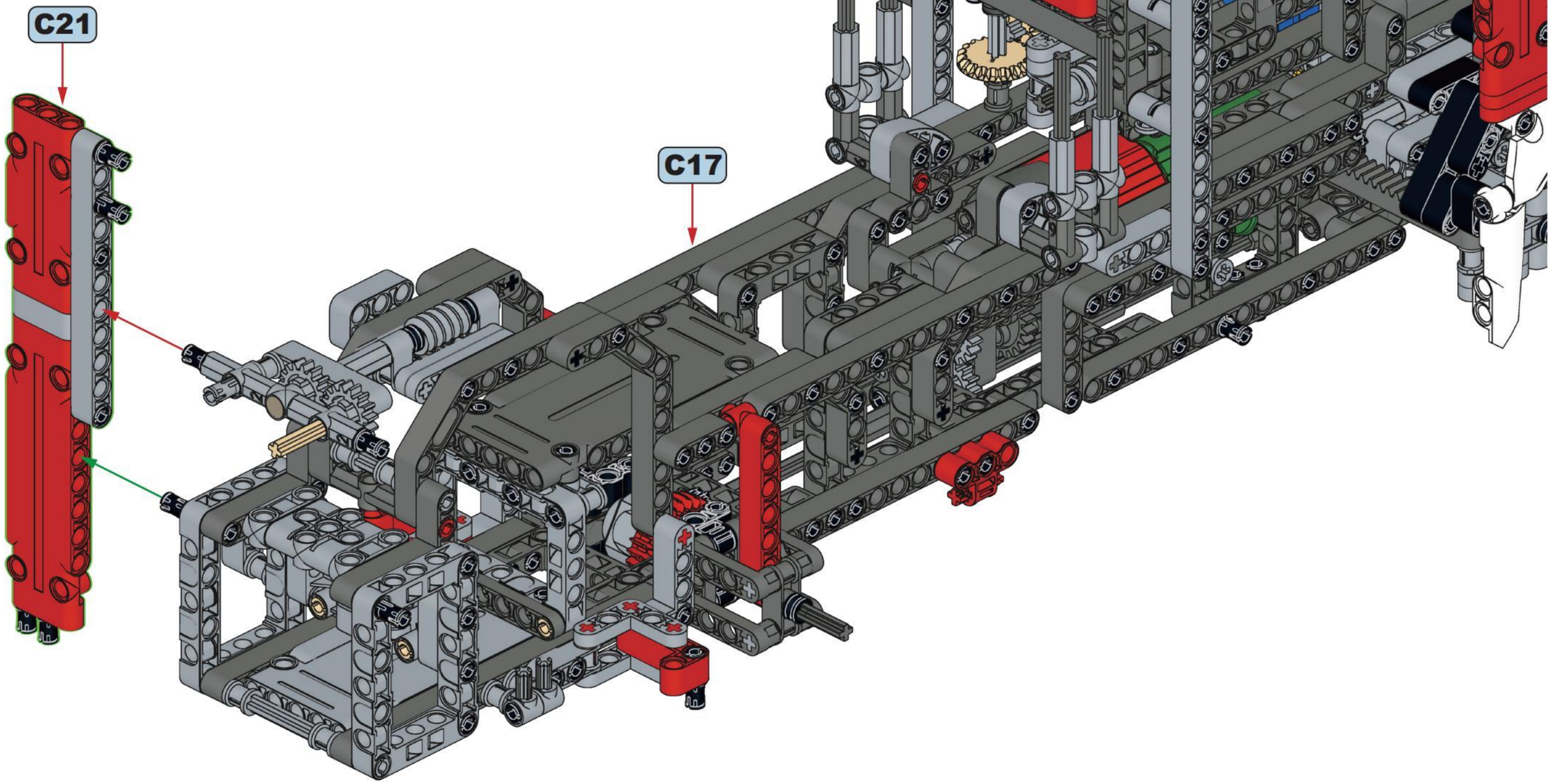

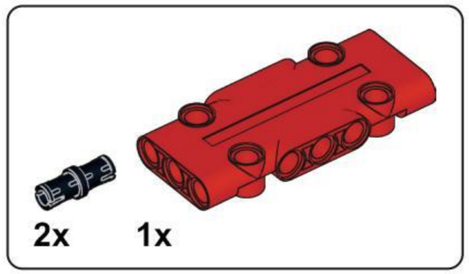


# C23

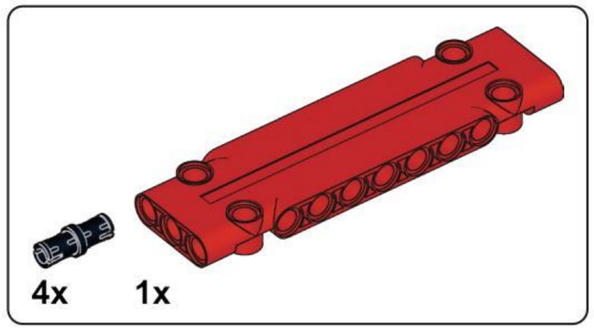


## C24

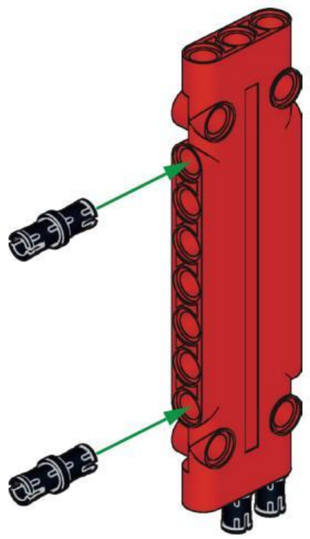

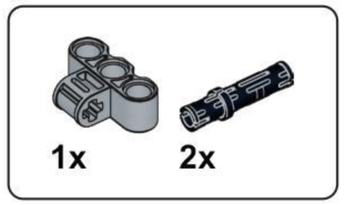


## C25

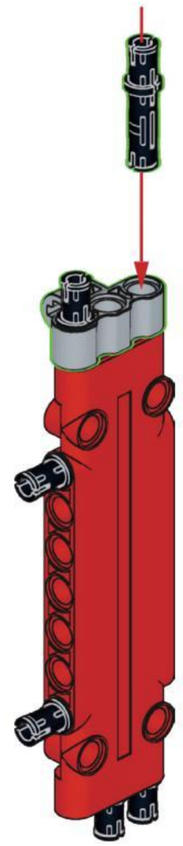

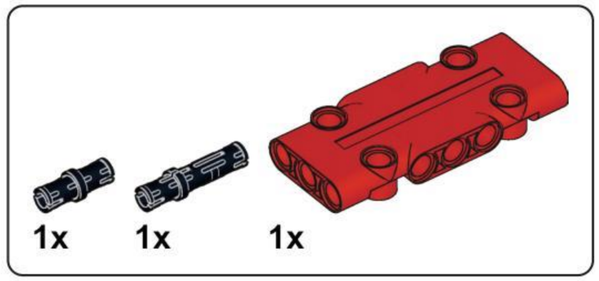


## C26

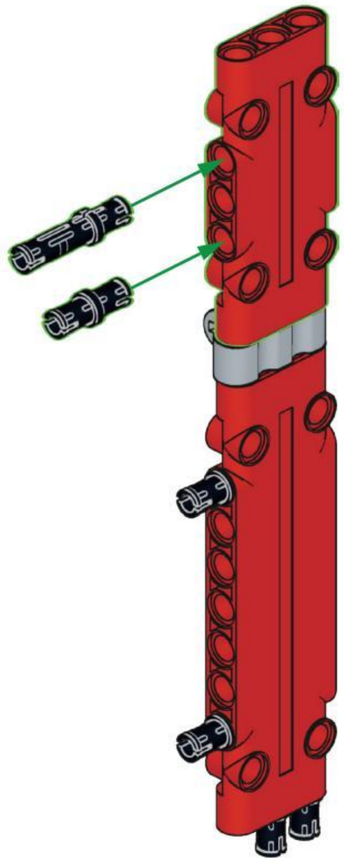

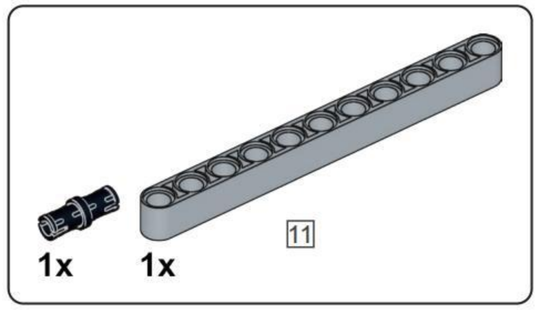


## C27

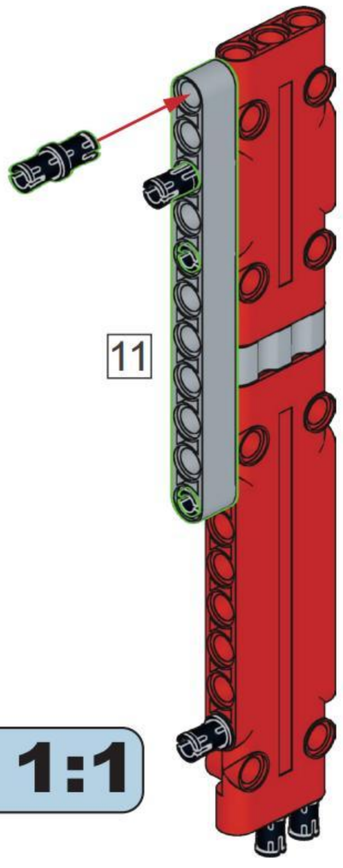


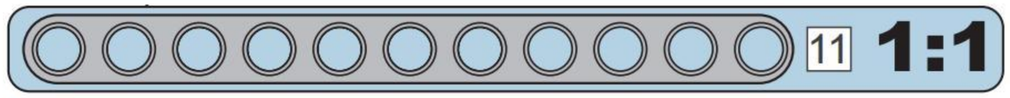

# C28

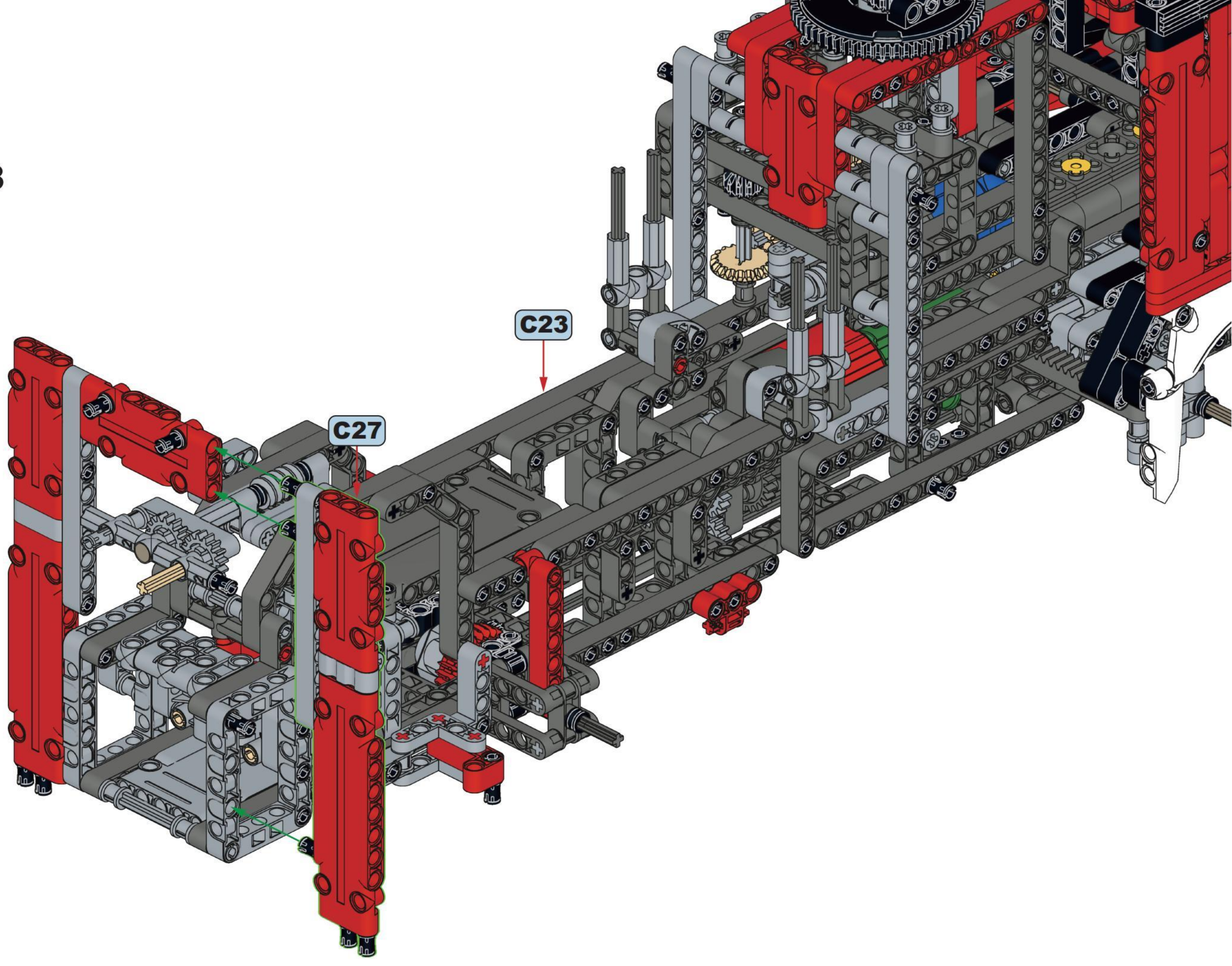

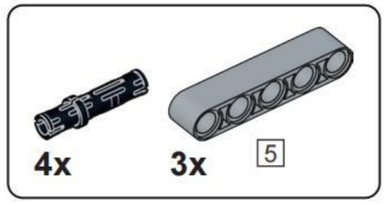


## C29

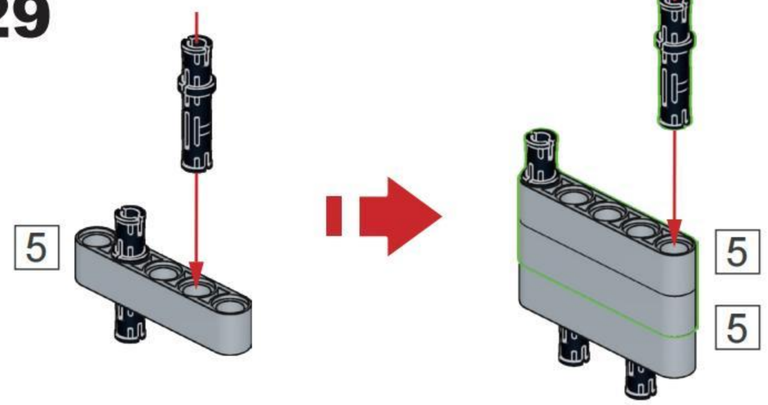


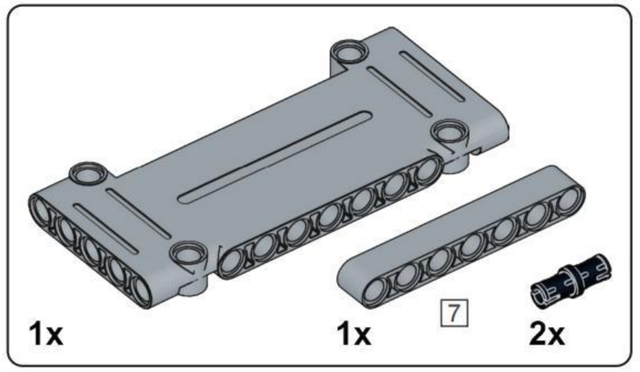


## C30

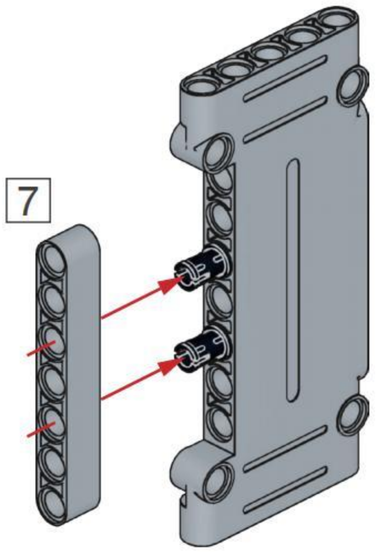


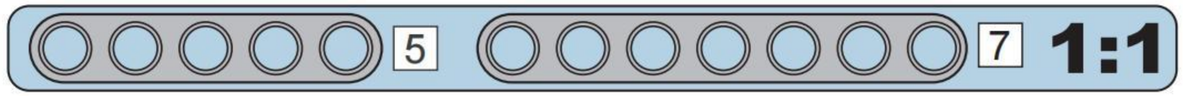


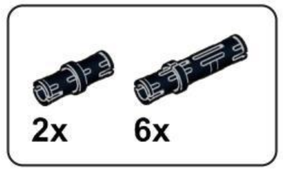


## C31

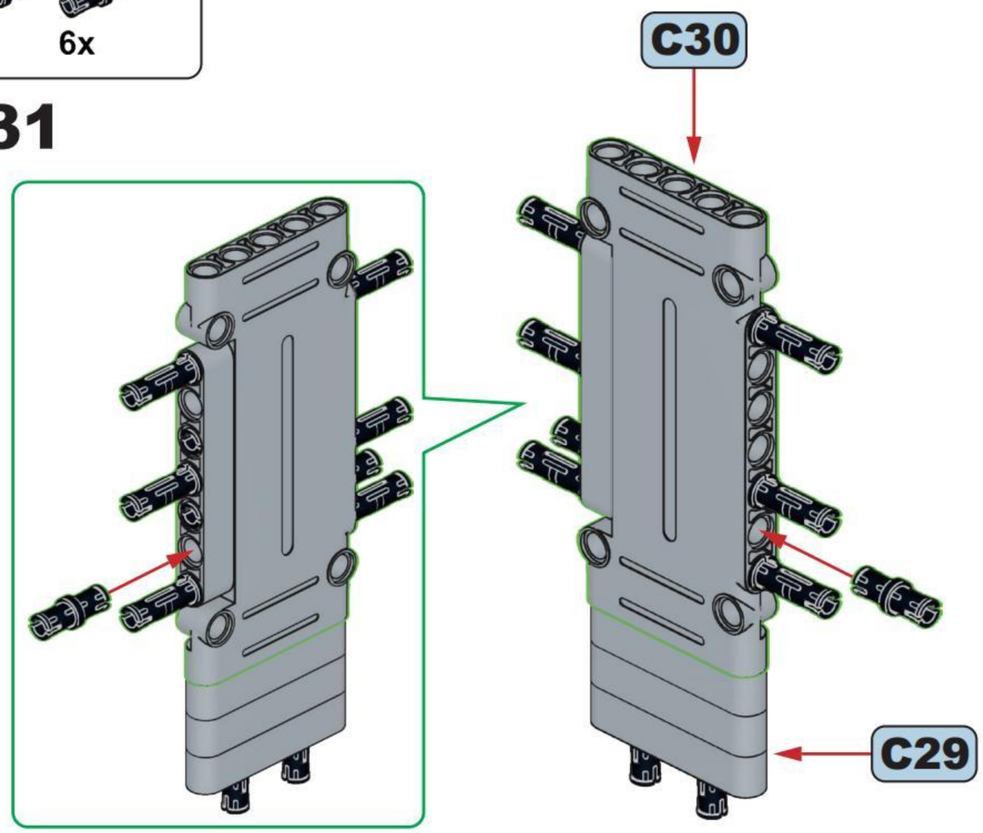


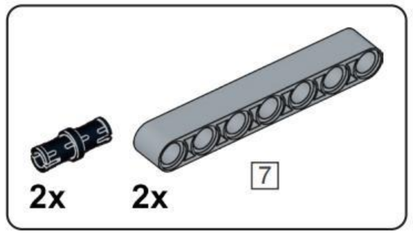


## C32

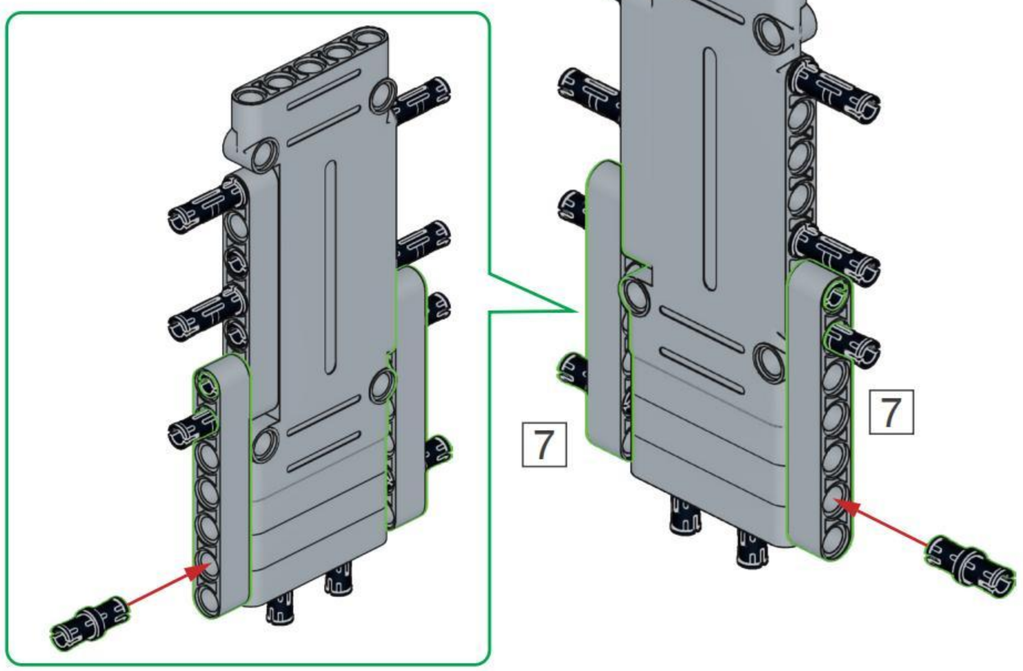

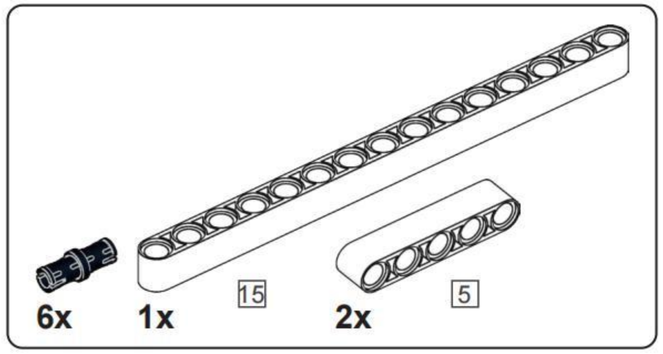


## C33

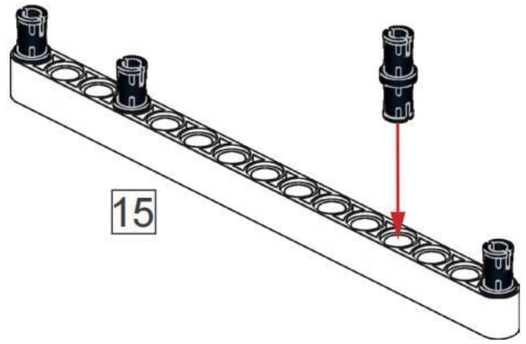


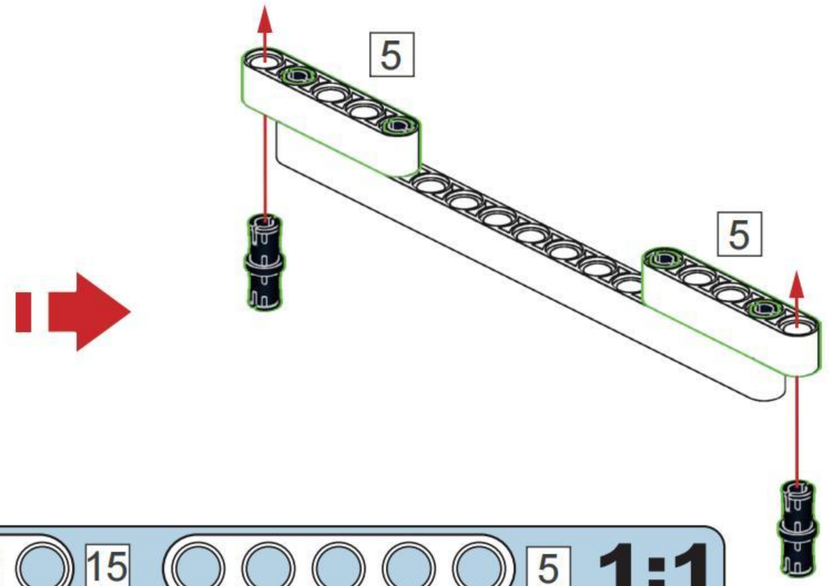


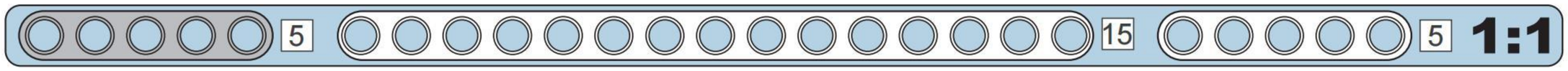


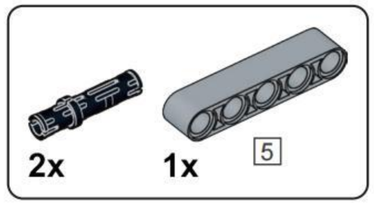


## C34

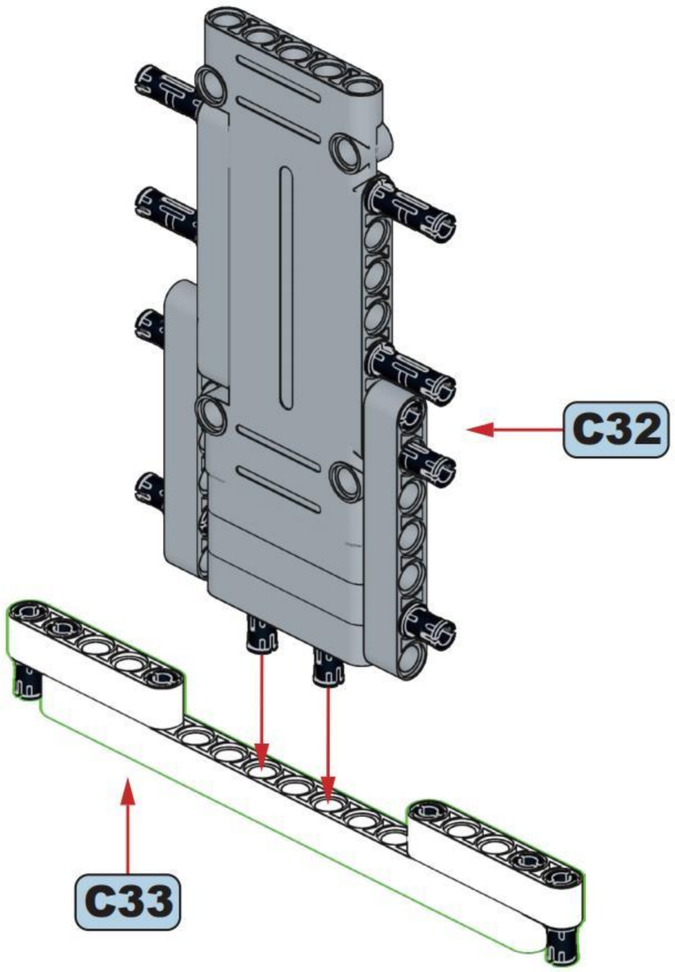


## C35

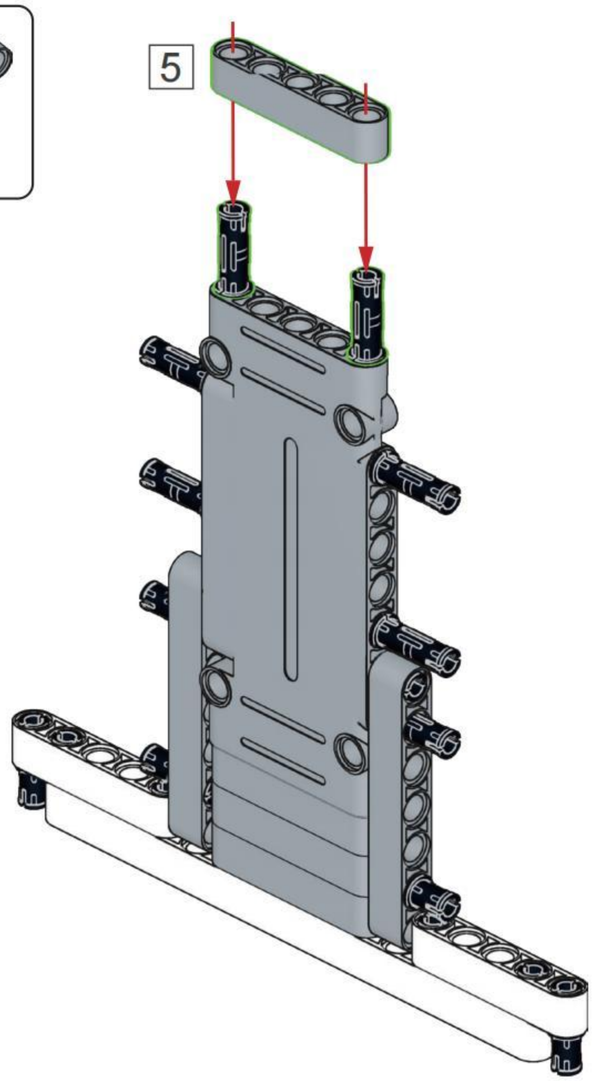

2x 1x 5

## C36

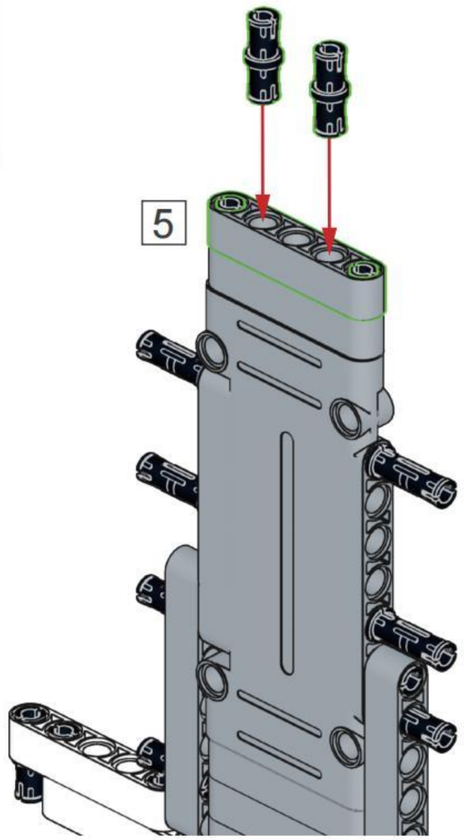


2x 9

## C37

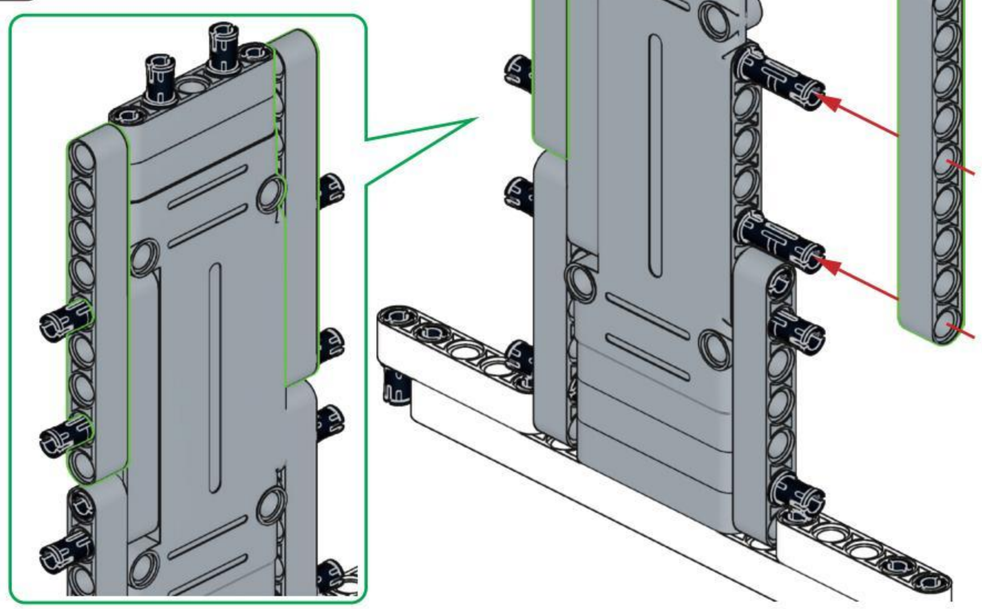


2x 1x

## C38

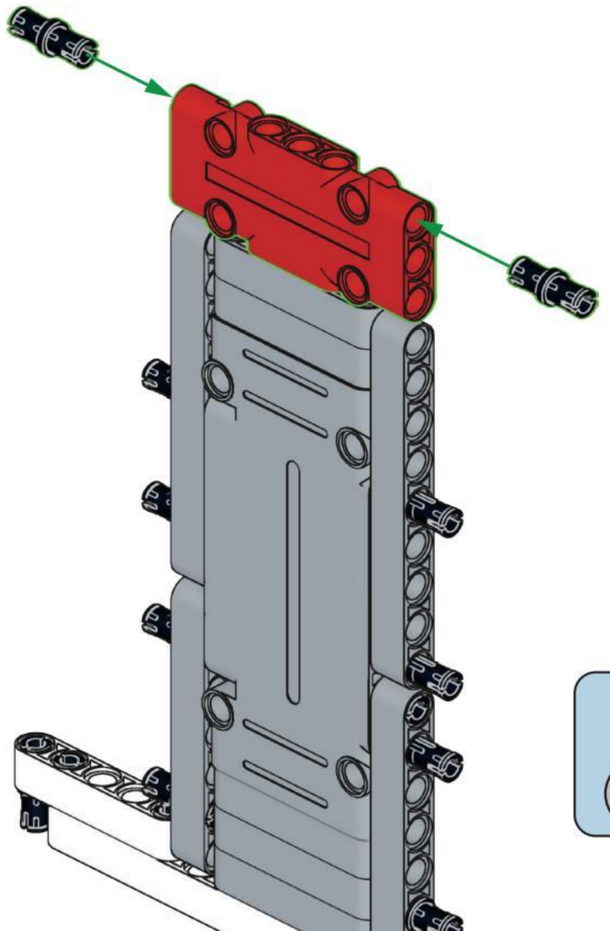

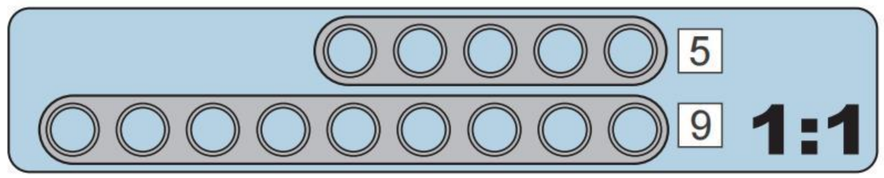

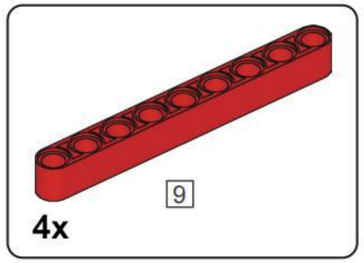


## C39

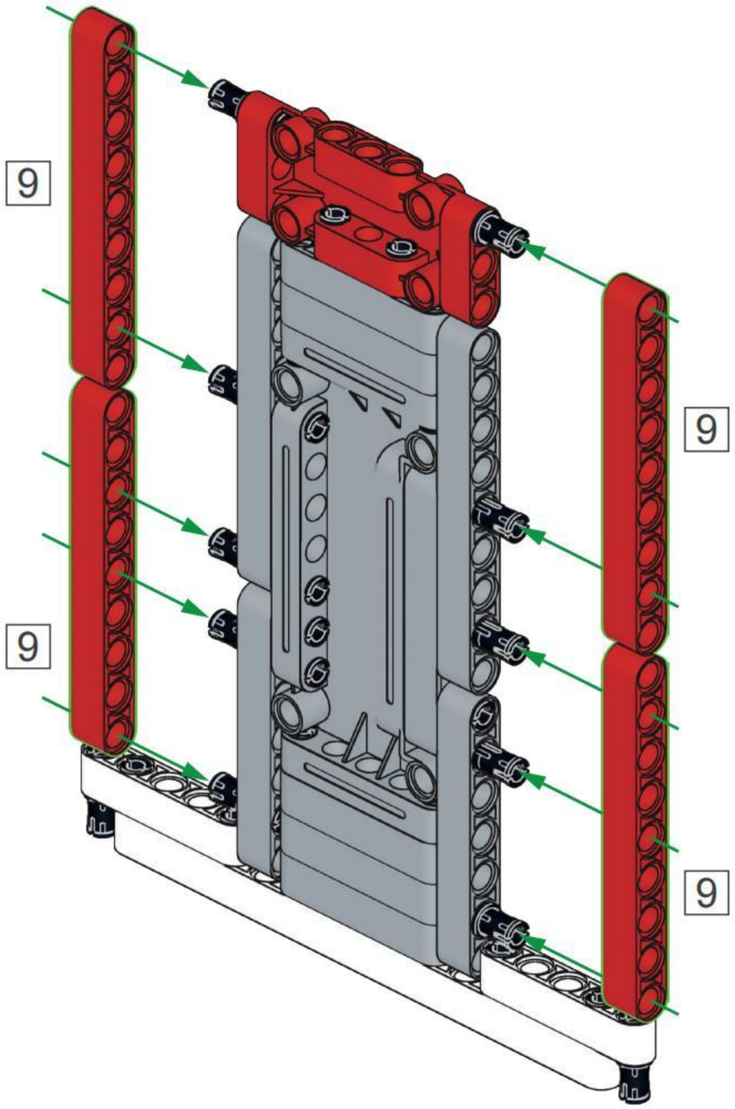


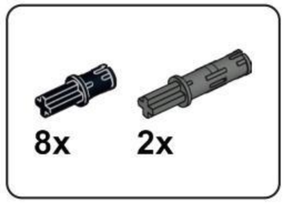


## C40

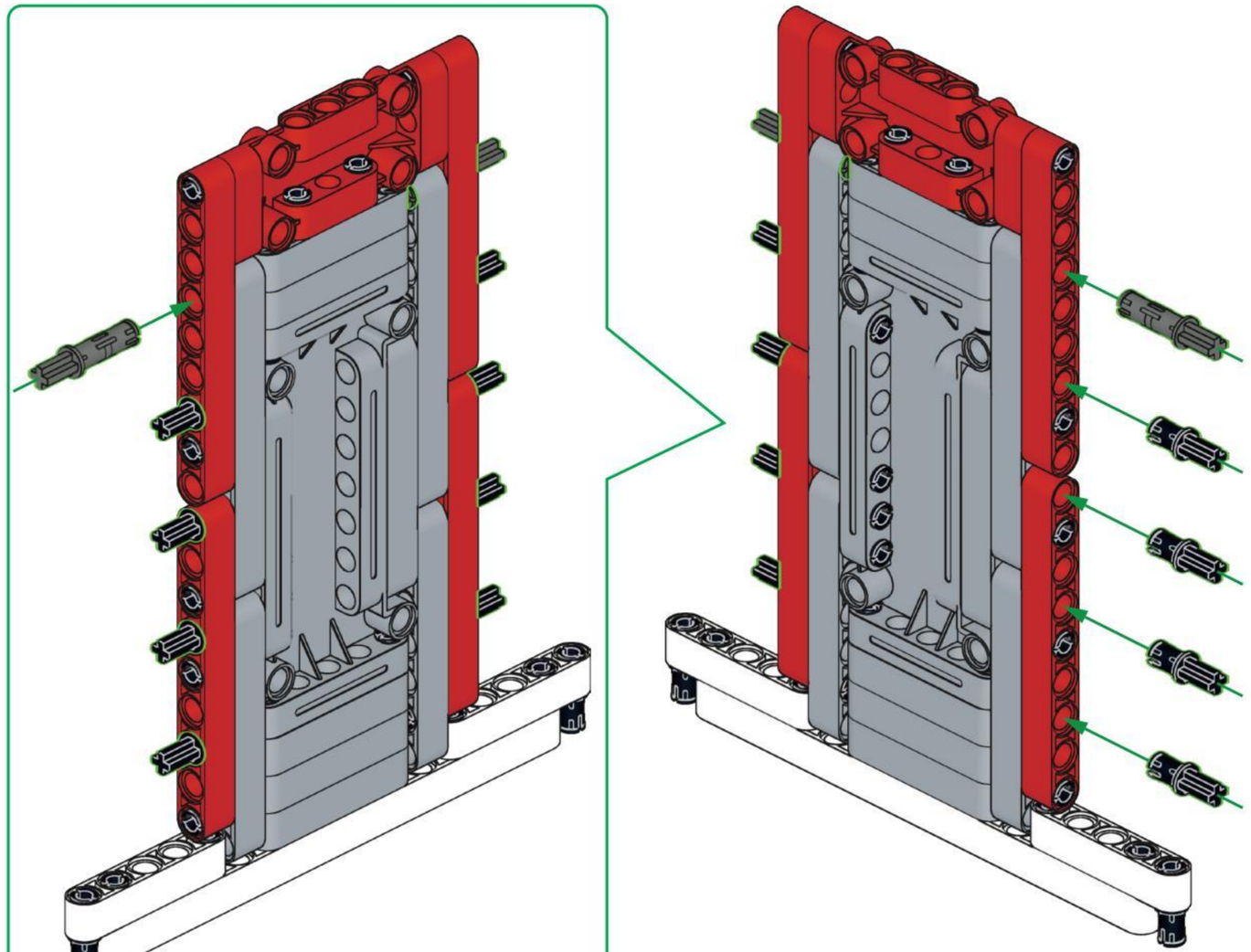

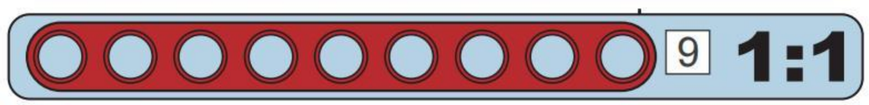

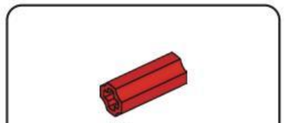


# C41

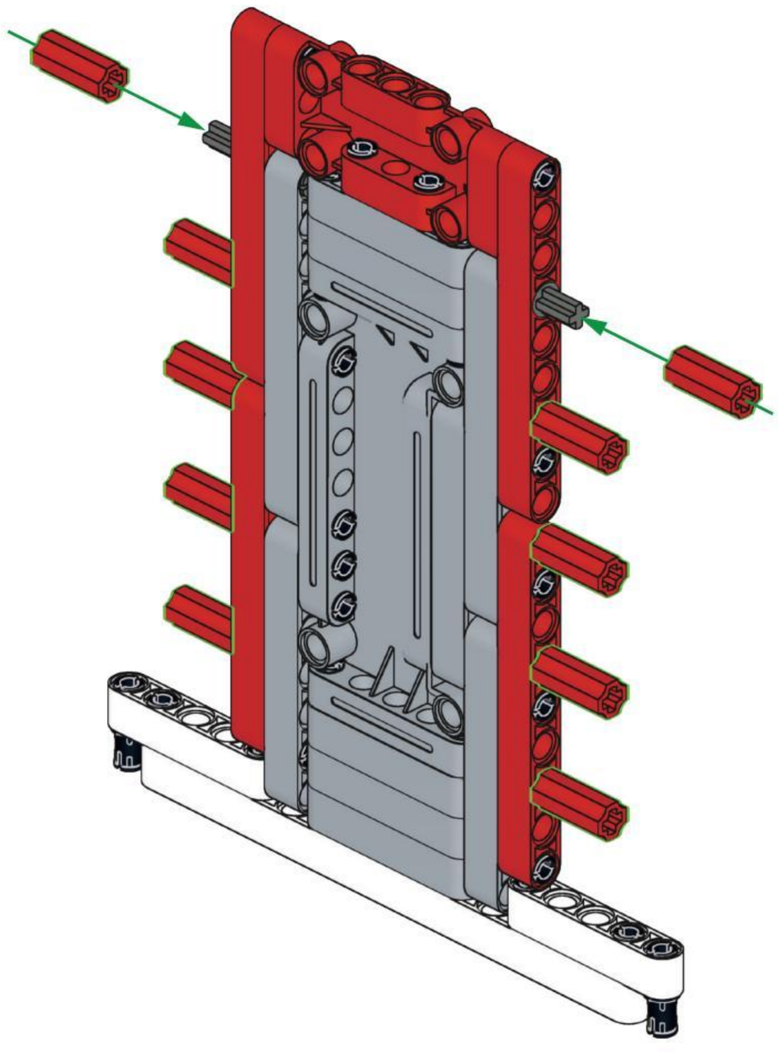

# C42

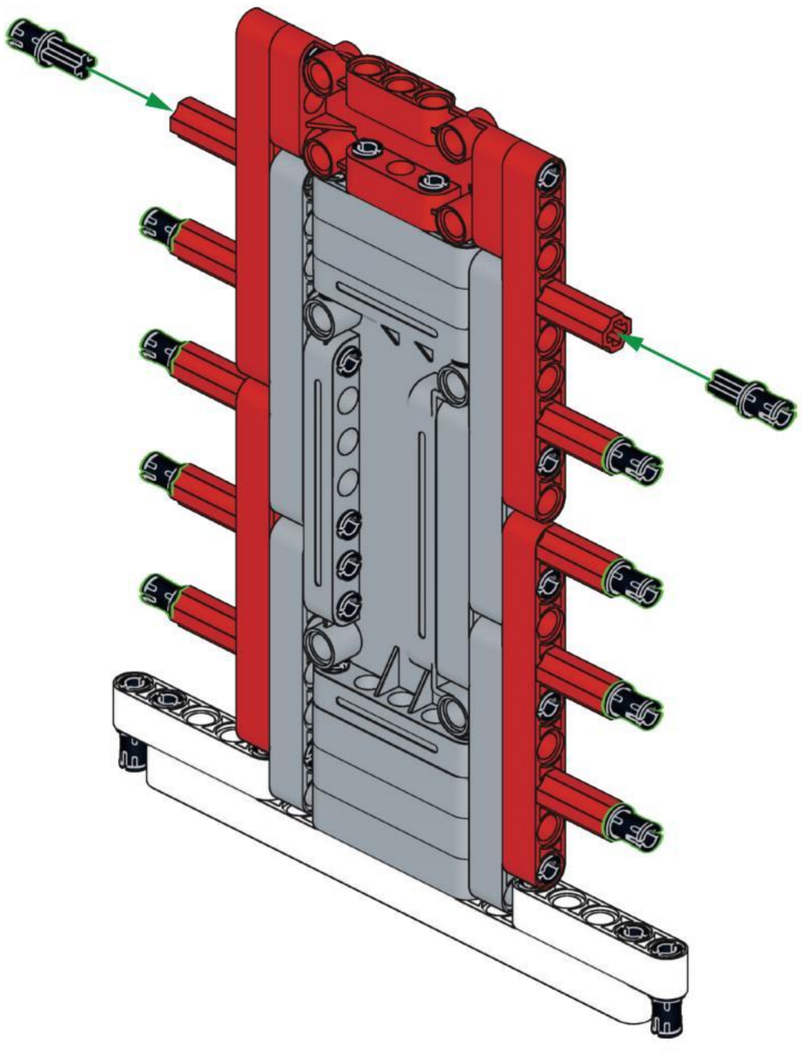

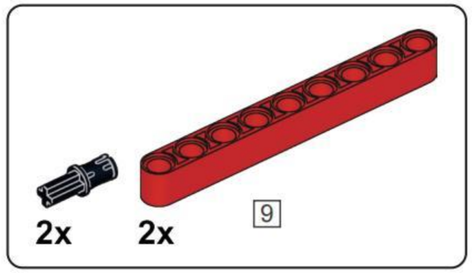


## C43

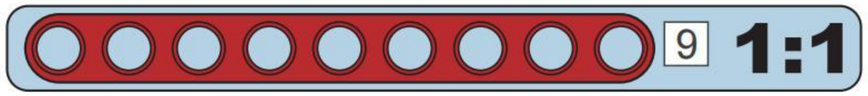


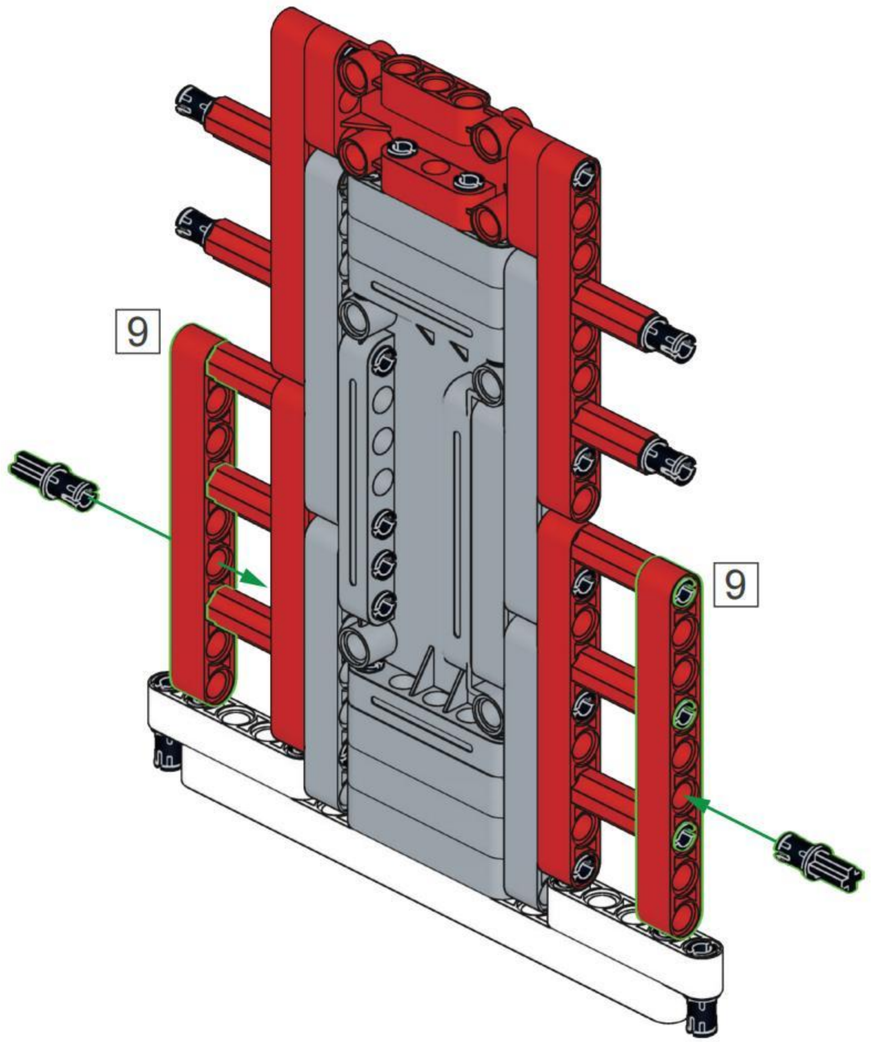


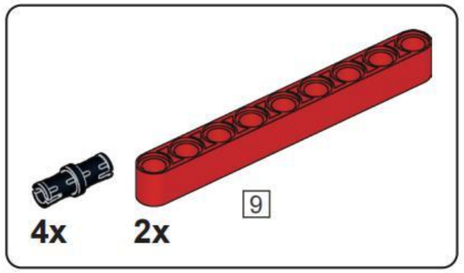


## C44

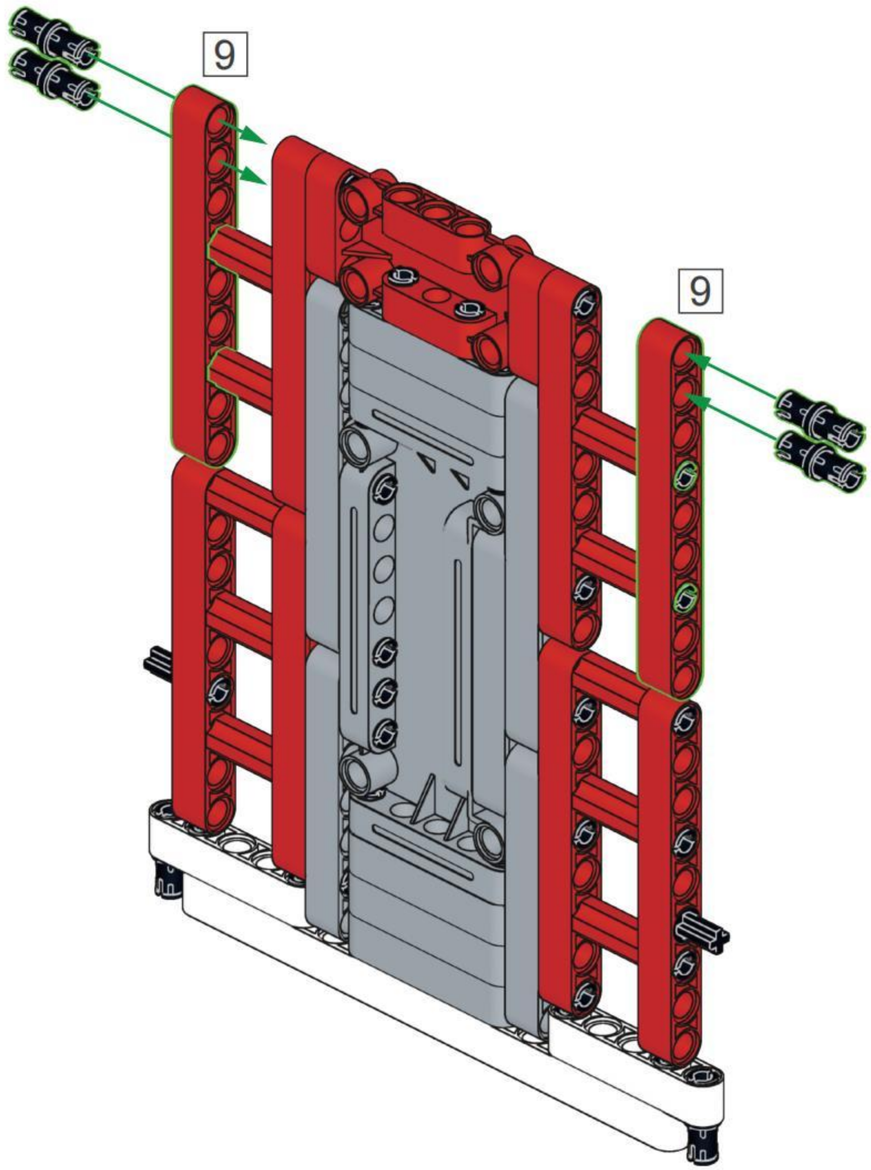

# C45

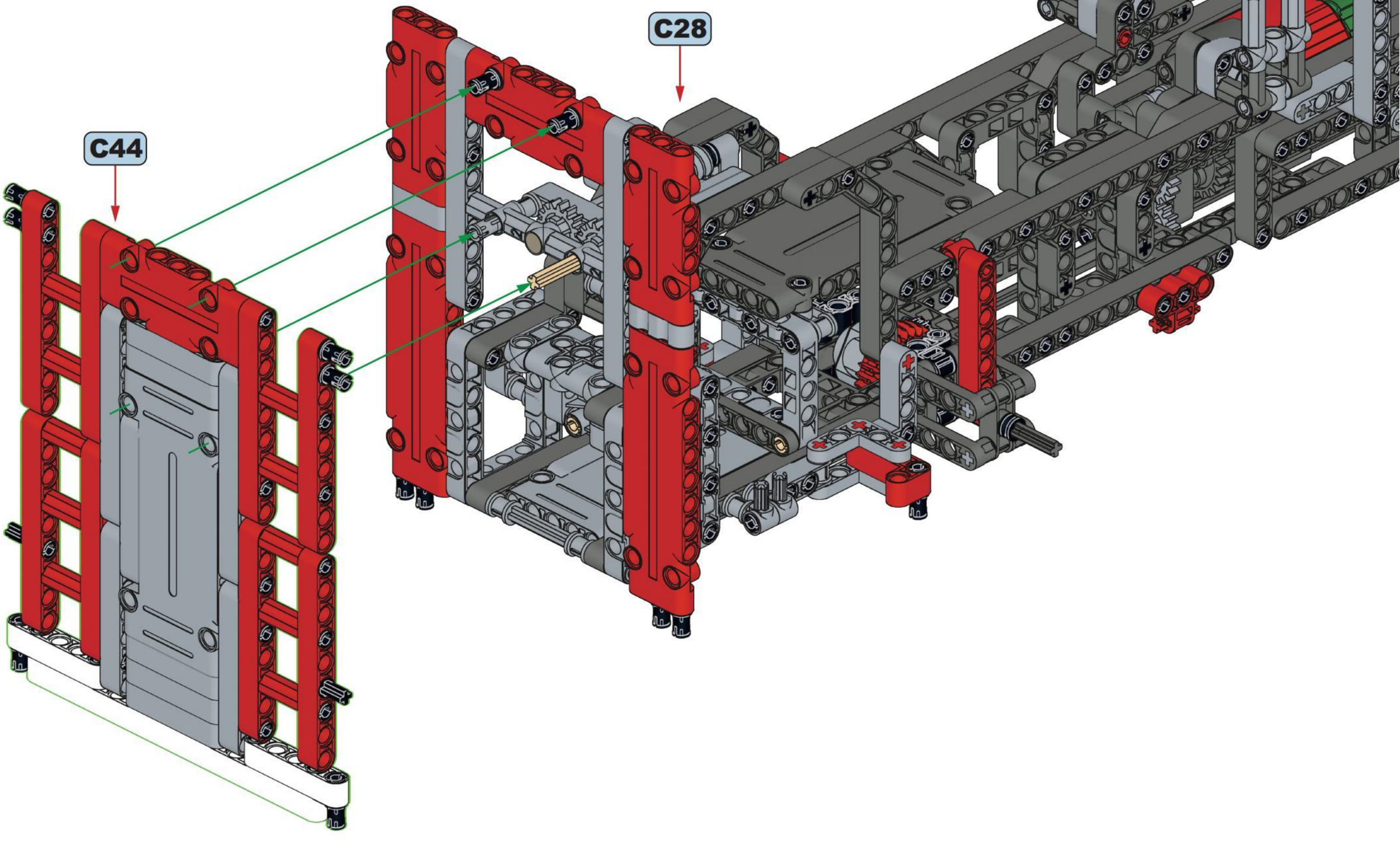

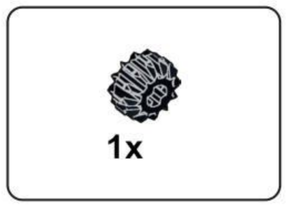


**C46**

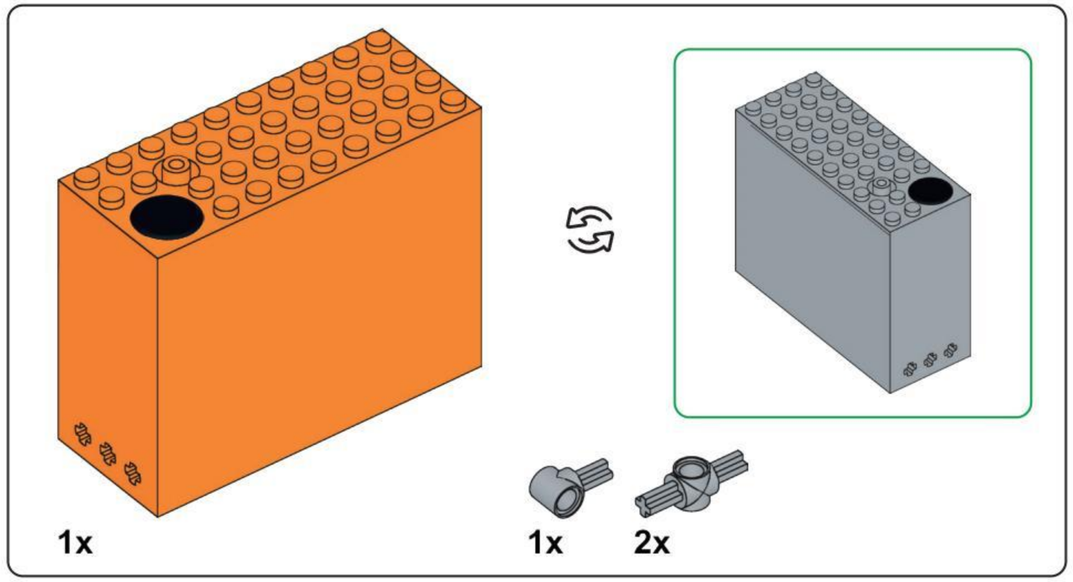


## C47

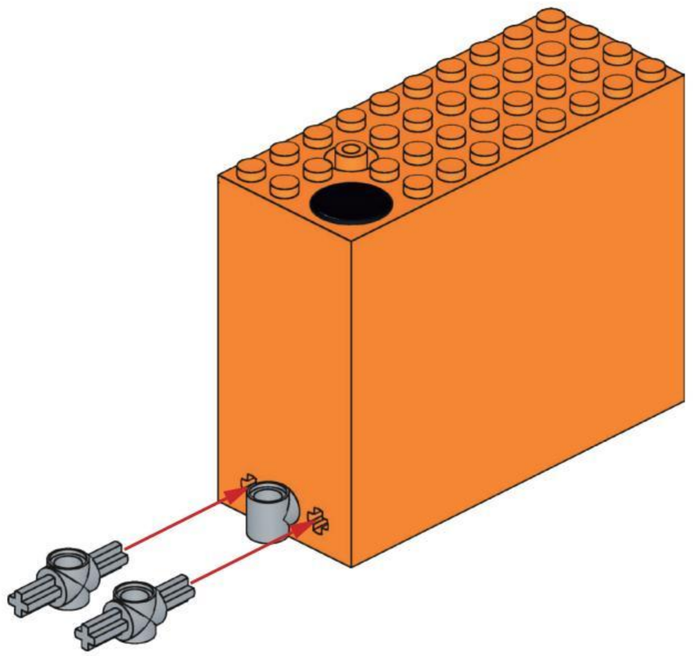

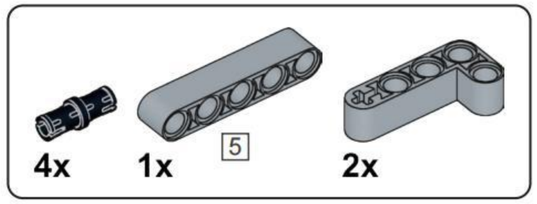


## C48

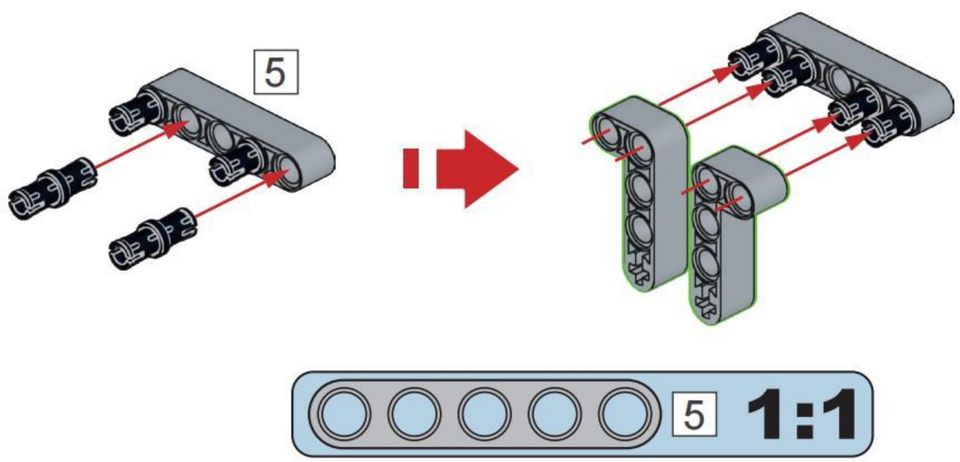


## C49

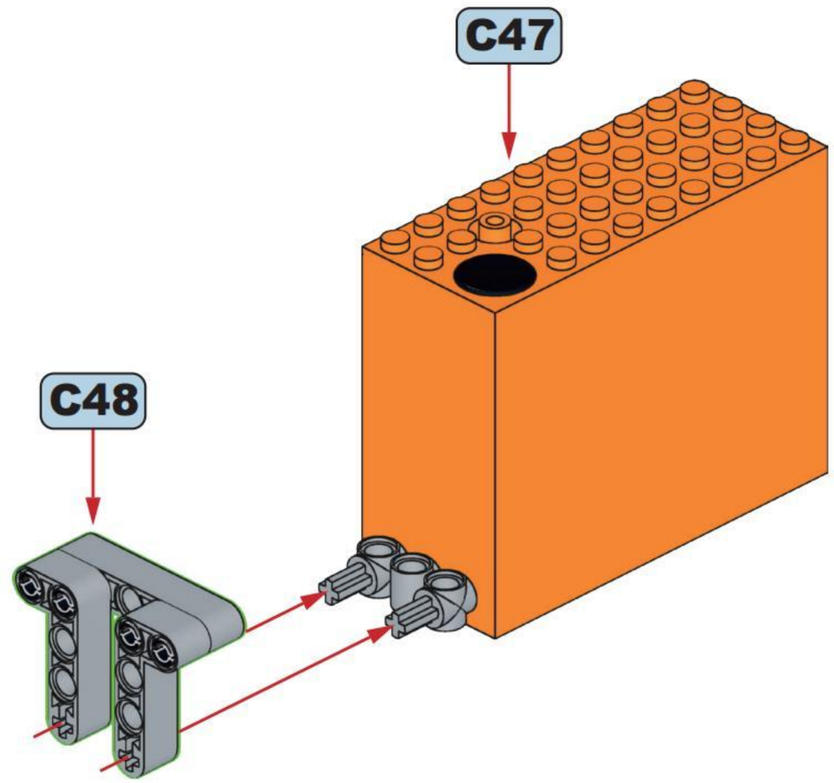

1x 80cm

C50

C49

C46

80cm

2x 1x 5 1x

# C51

5 1:1

5

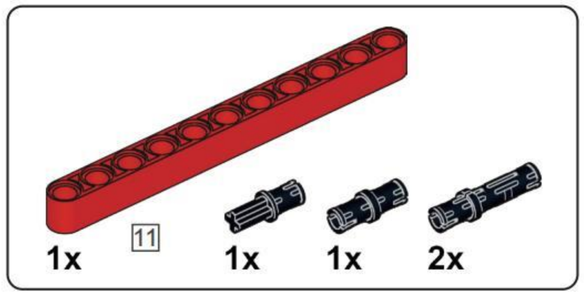


## C52

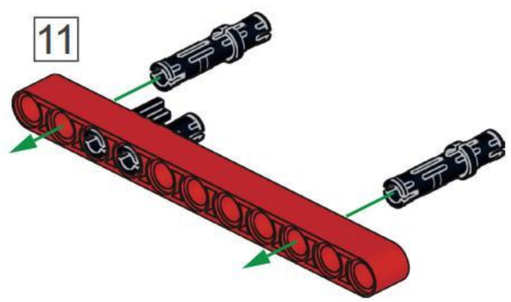


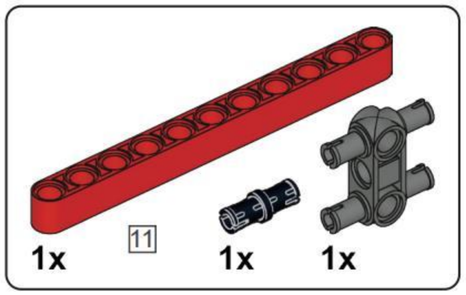


## C53

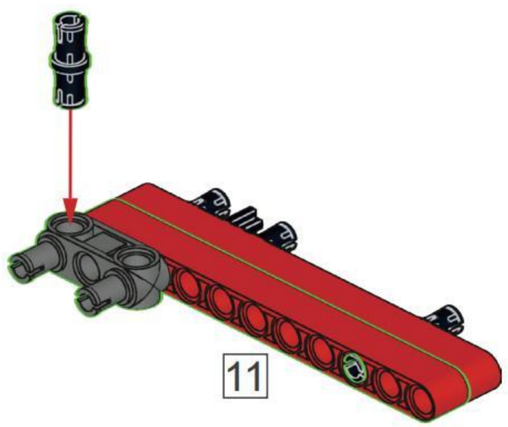


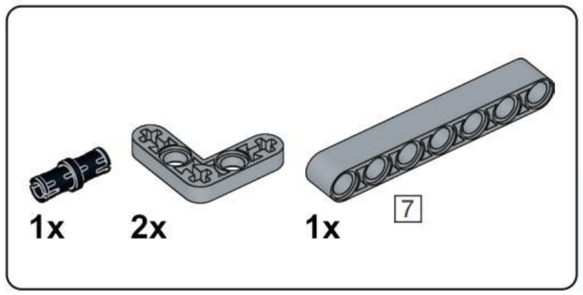


## C54

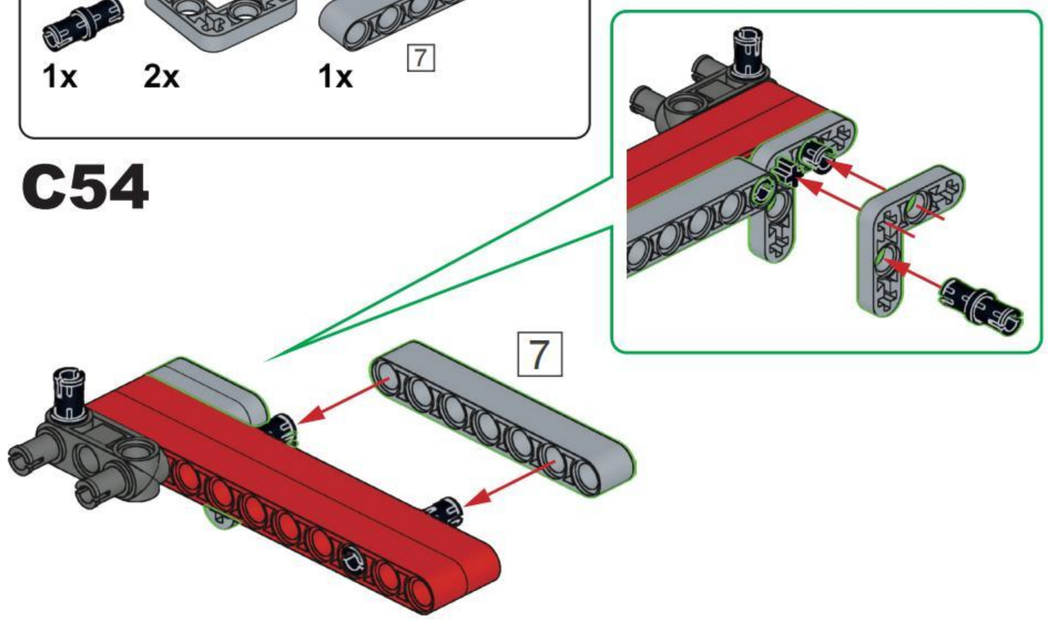


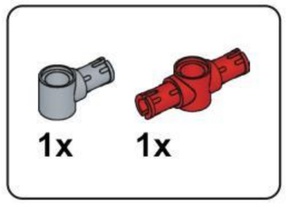


## C55

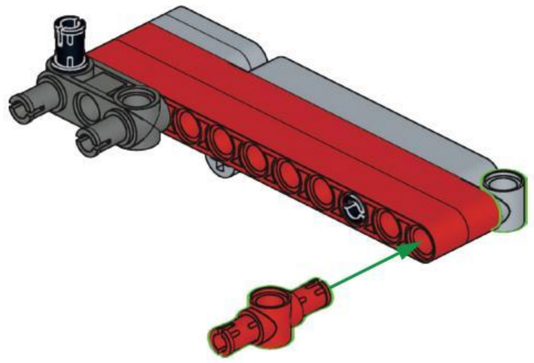

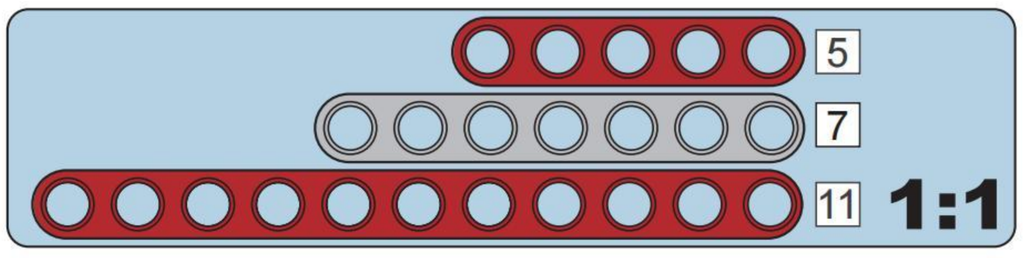


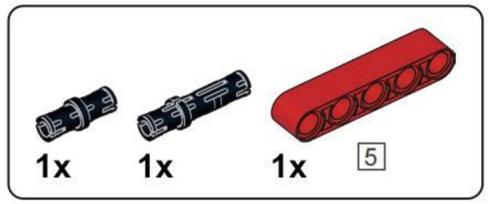


## C56

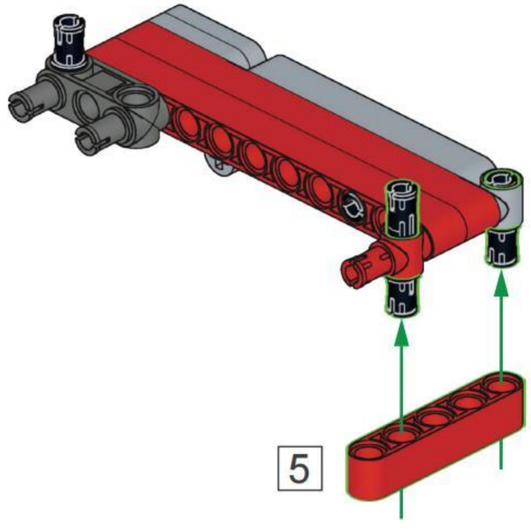

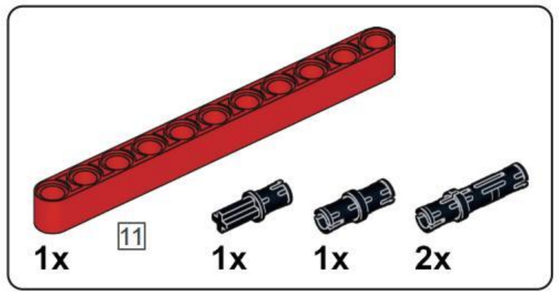


## C57

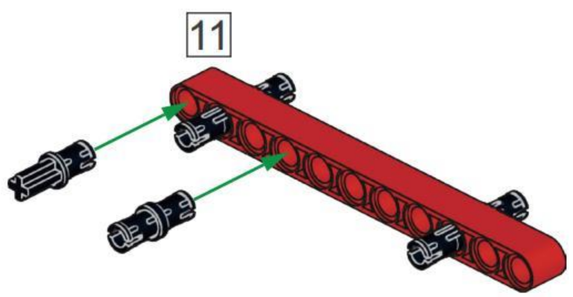


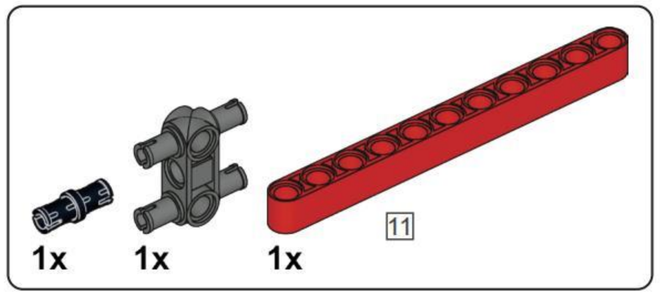


## C58

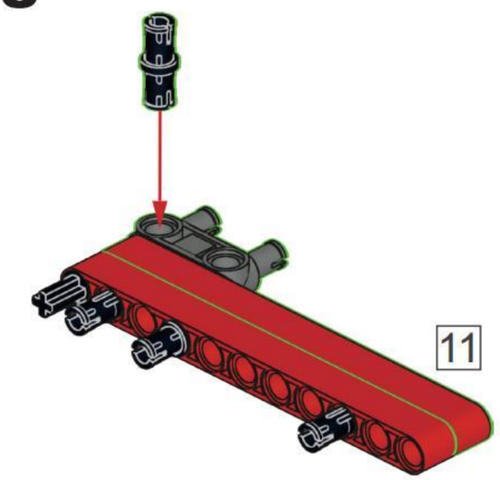


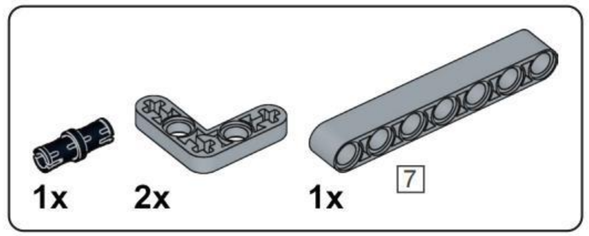


## C59

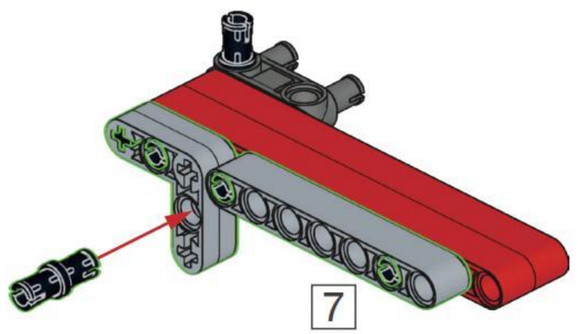


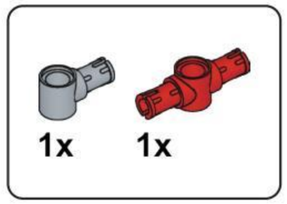


## C60

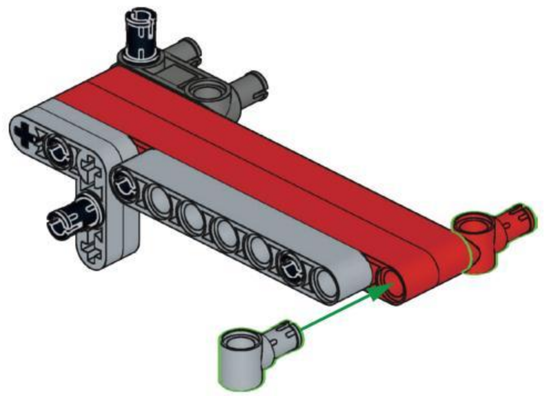

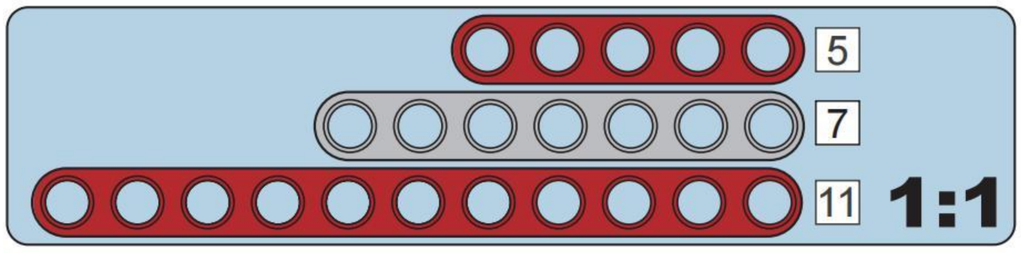


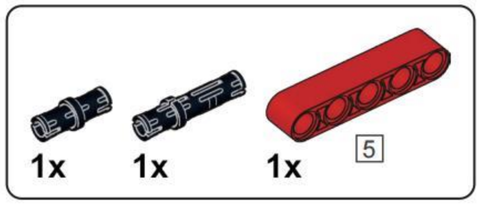


## C61

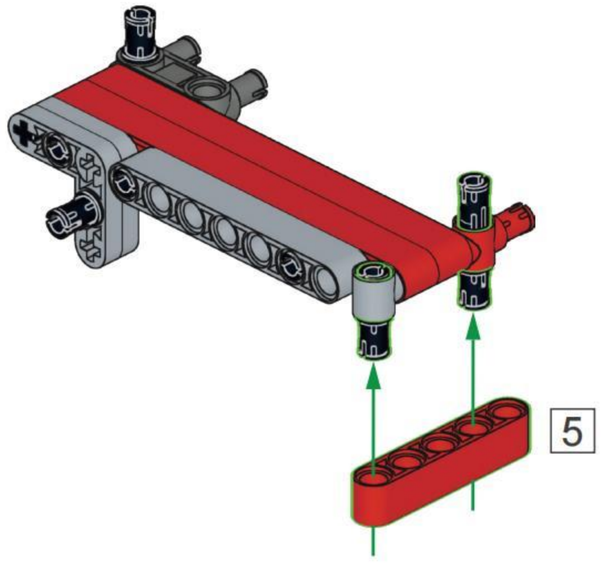

C62

C56

C61

C51

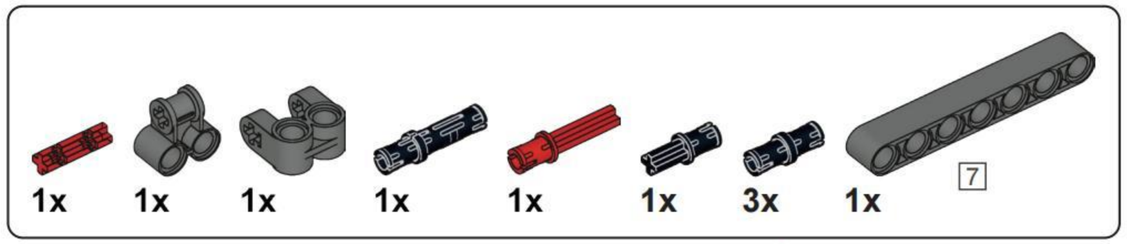


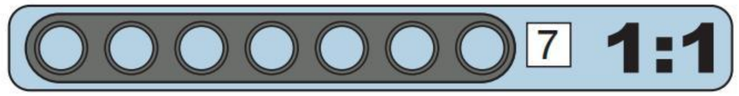


## C63

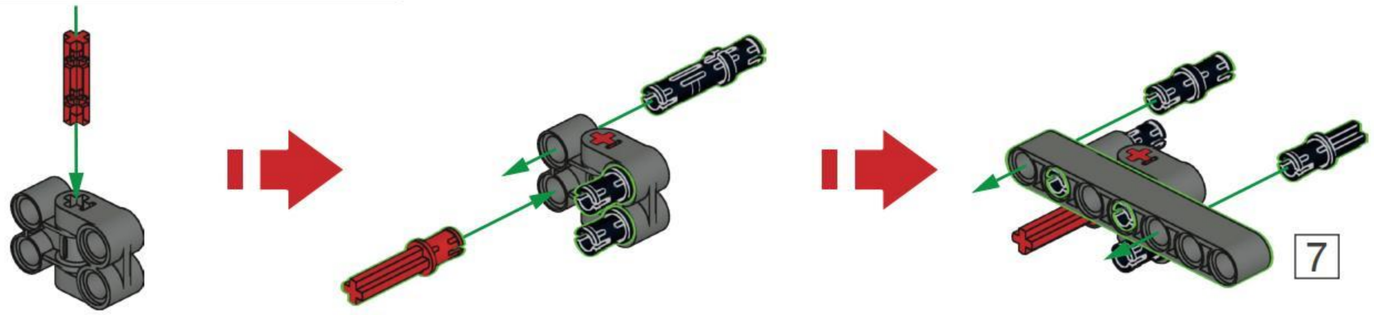


## C64

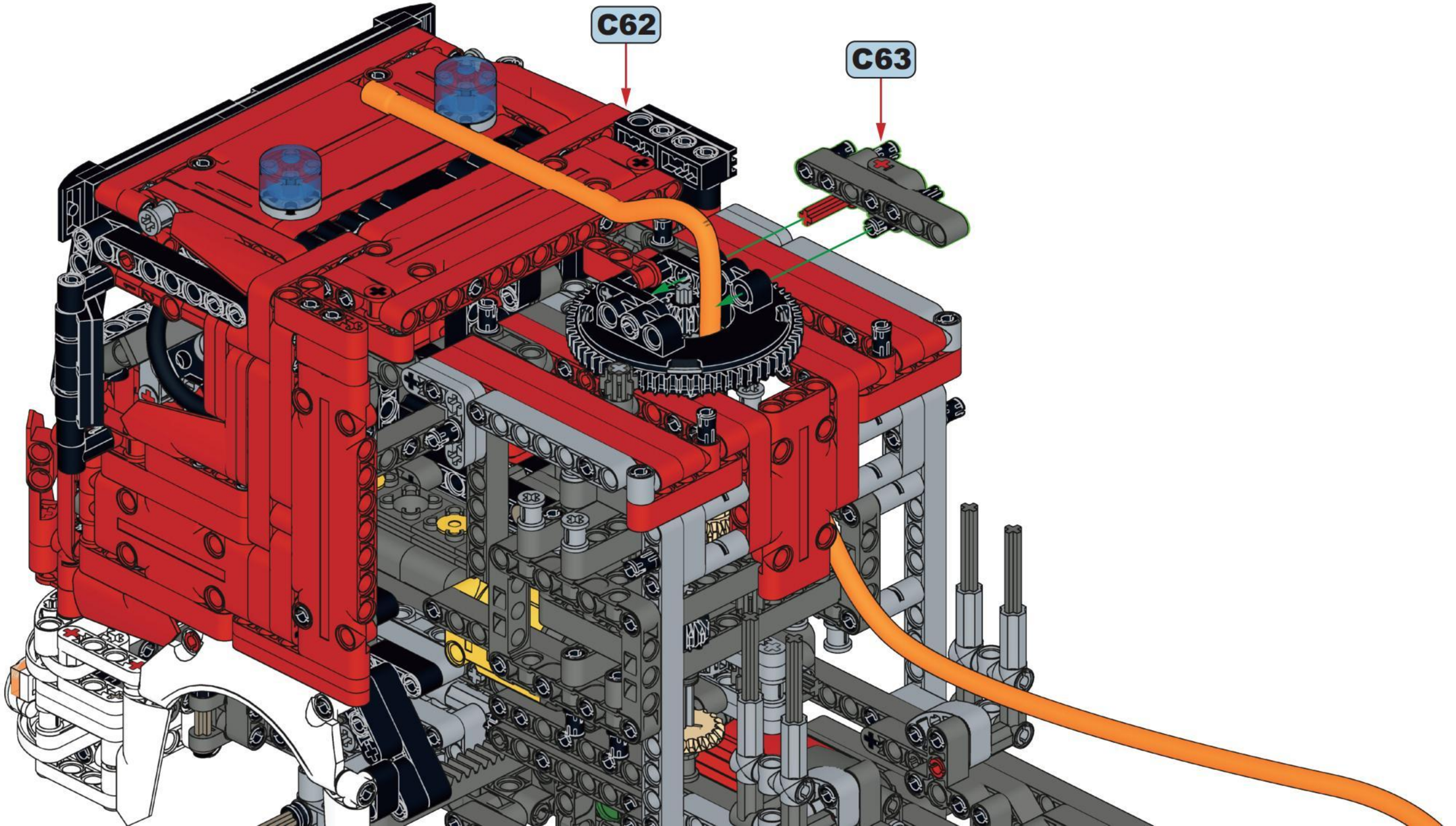

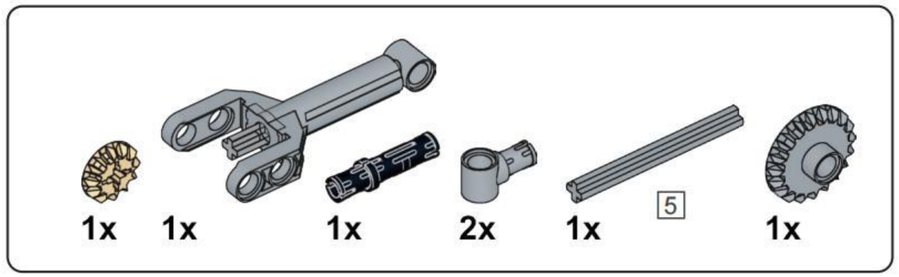


# C65

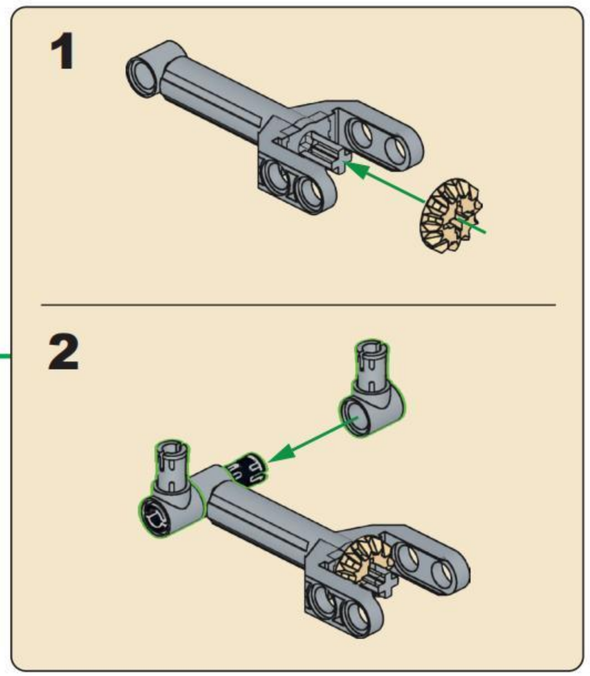


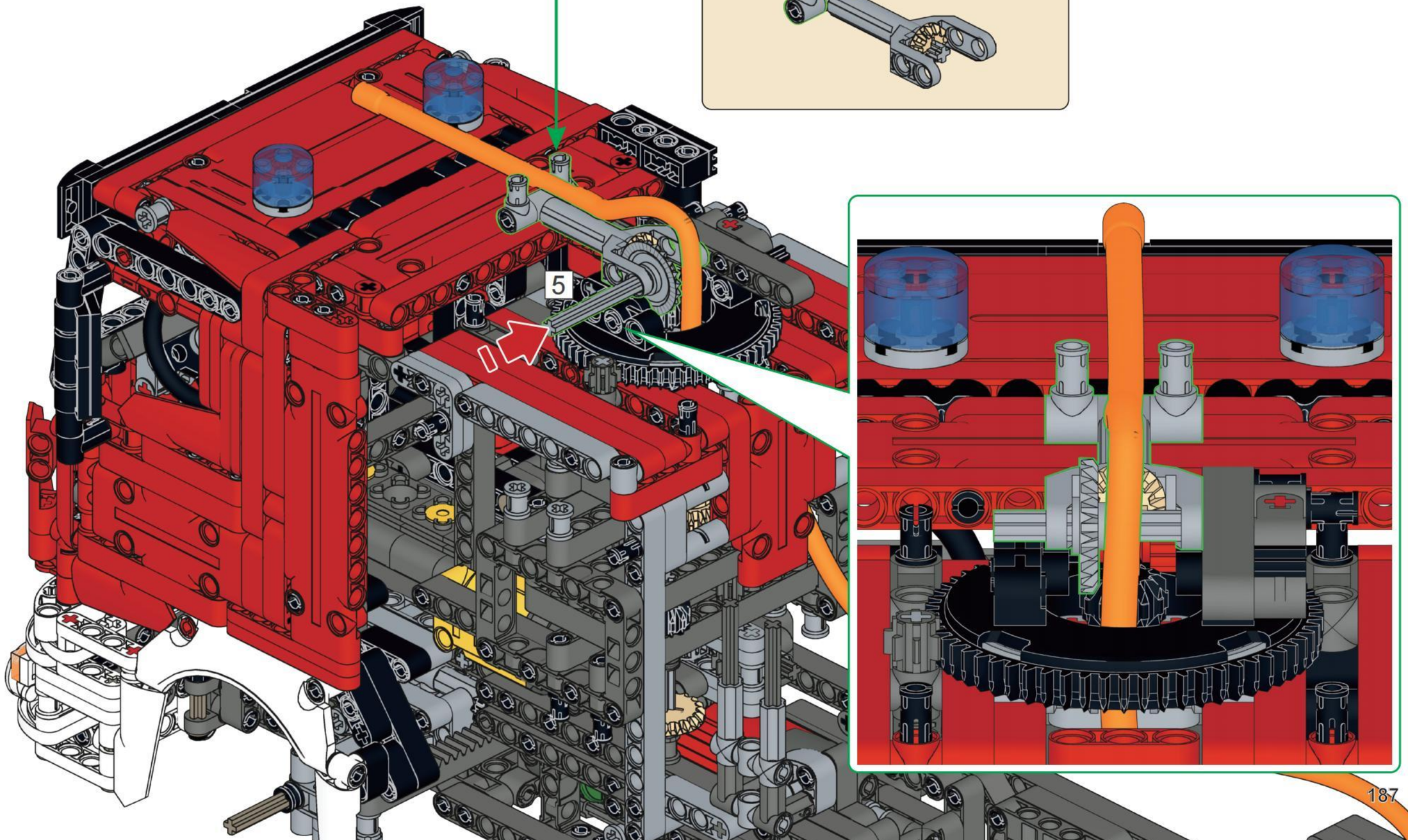

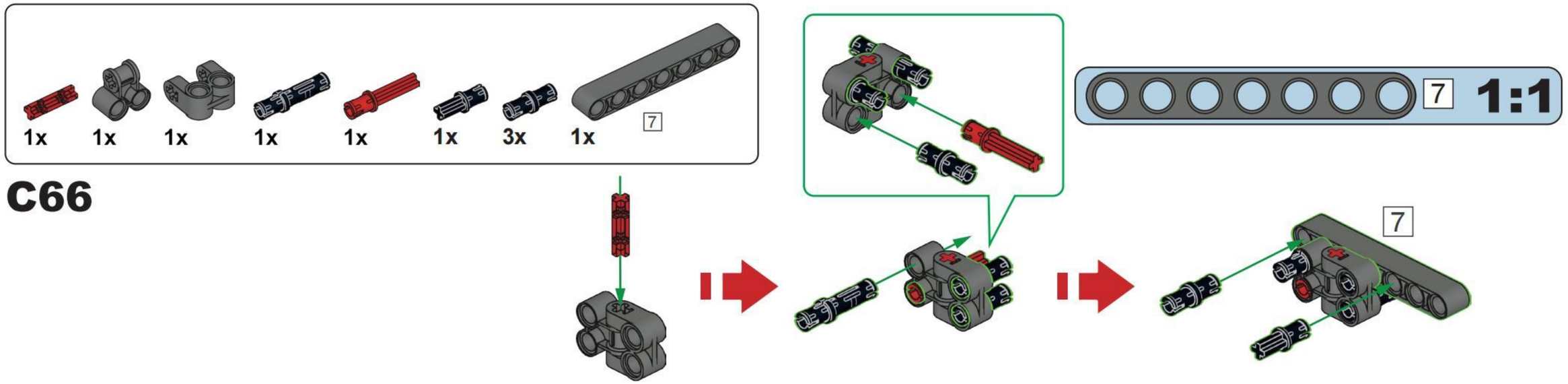


## C66

## C67

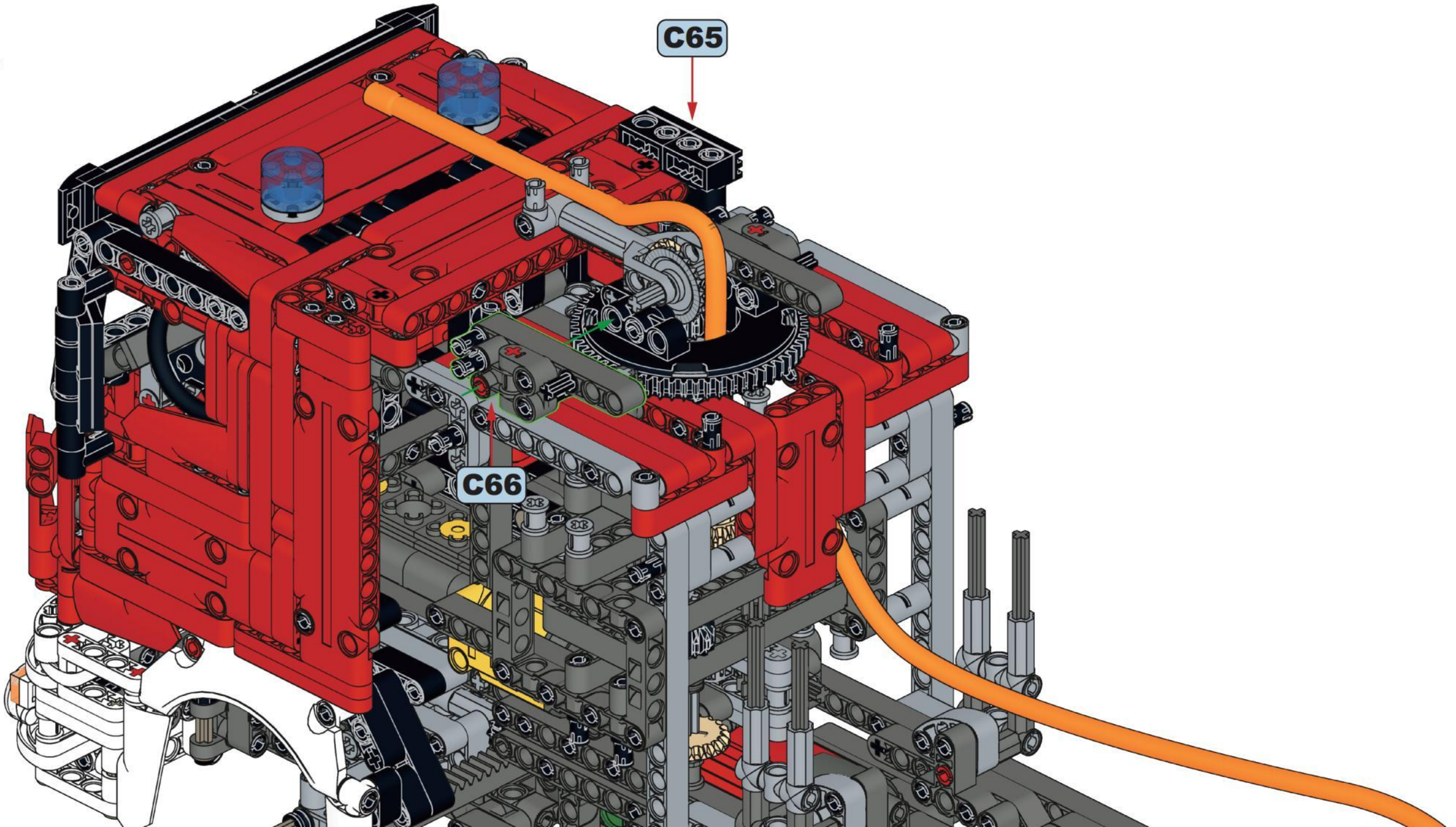

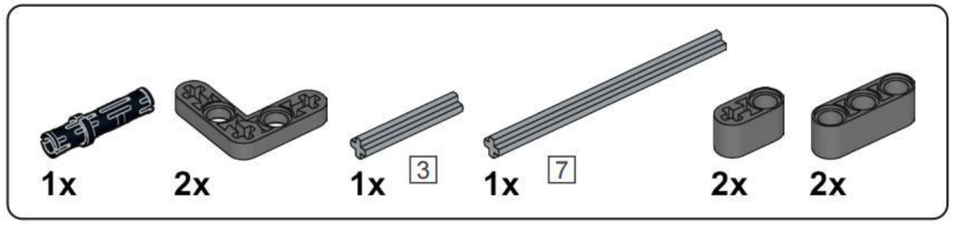


## C68

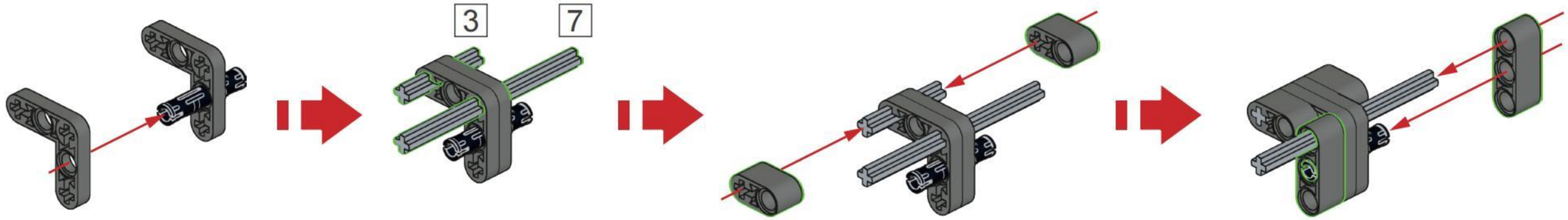


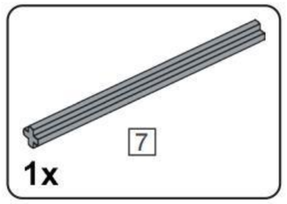


## C69




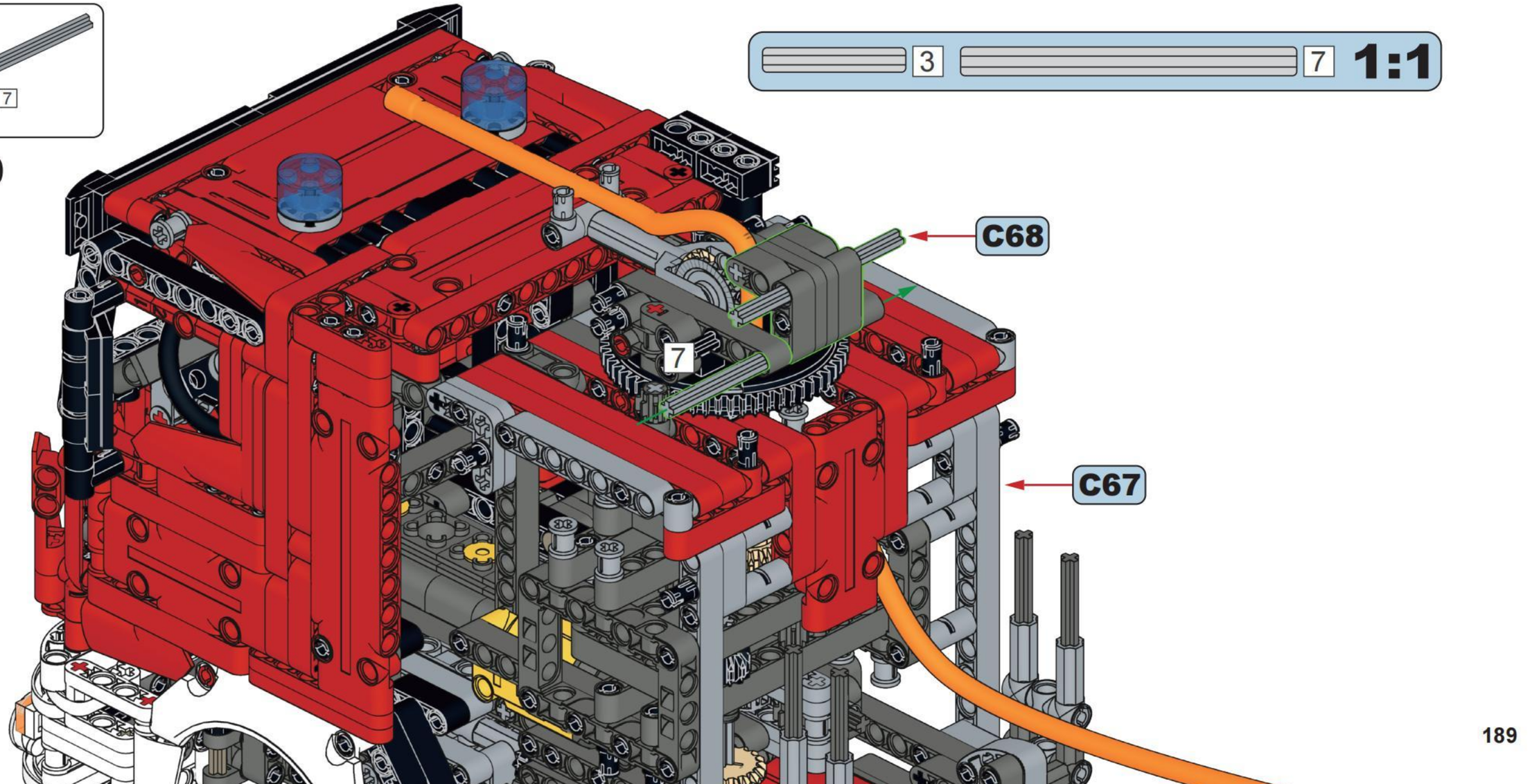

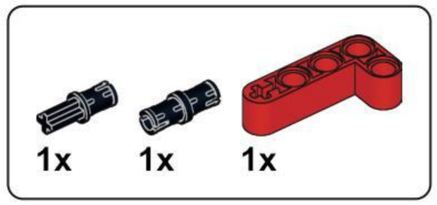


## C70

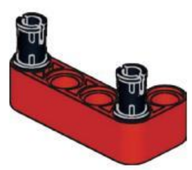

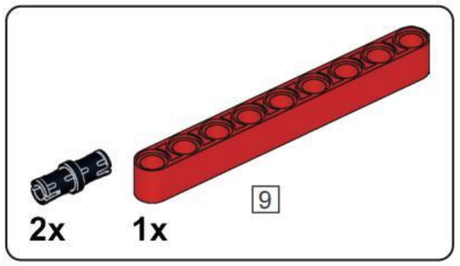


## C71

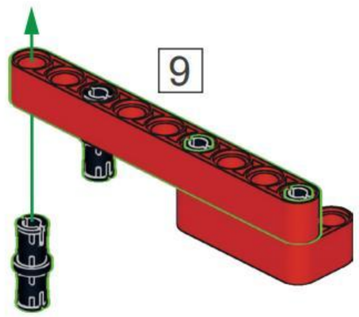


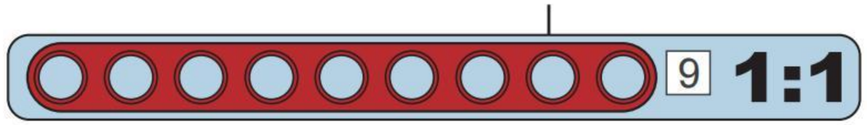


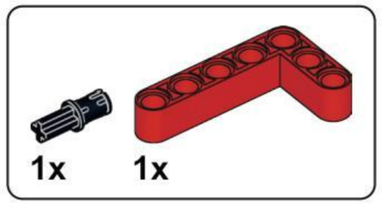


## C72

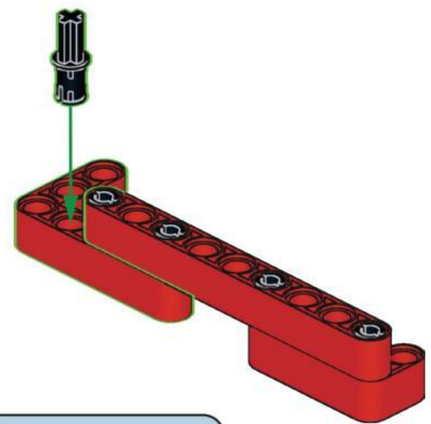

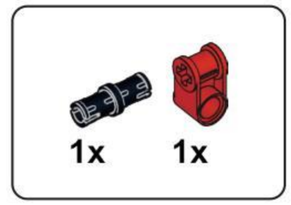


## C73

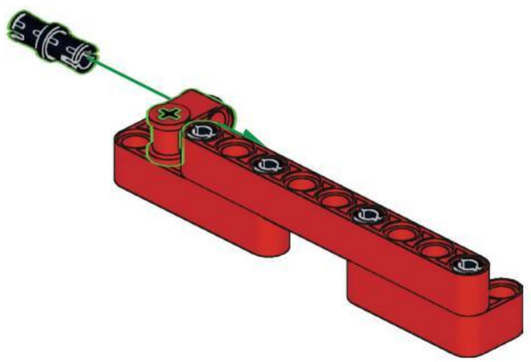

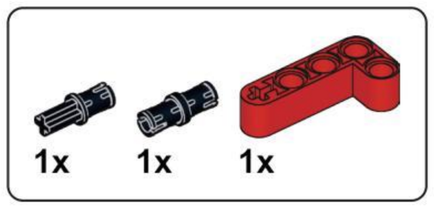


## C74

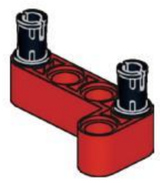

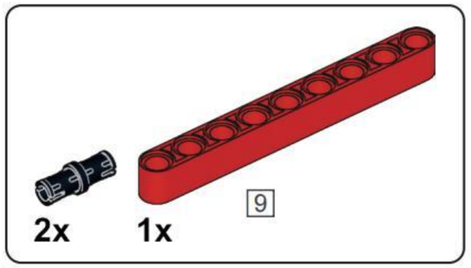


## C75

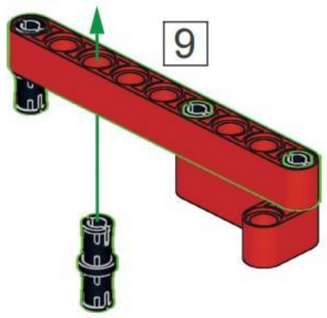


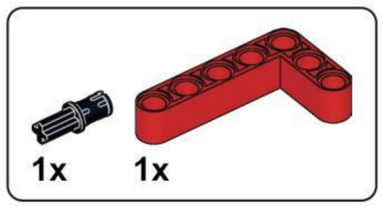


## C76

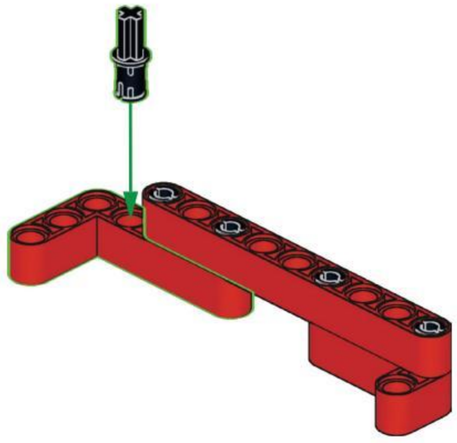

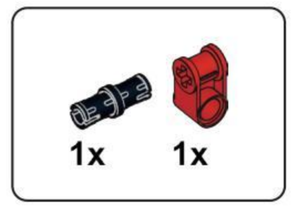


## C77

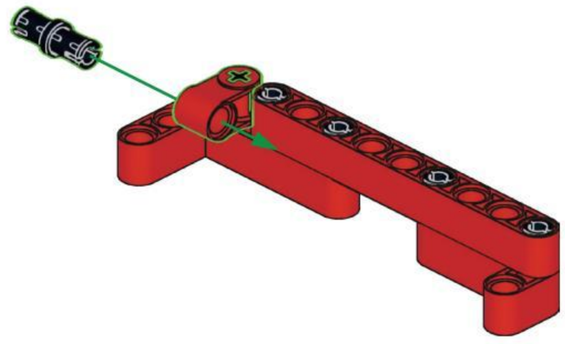

## C78

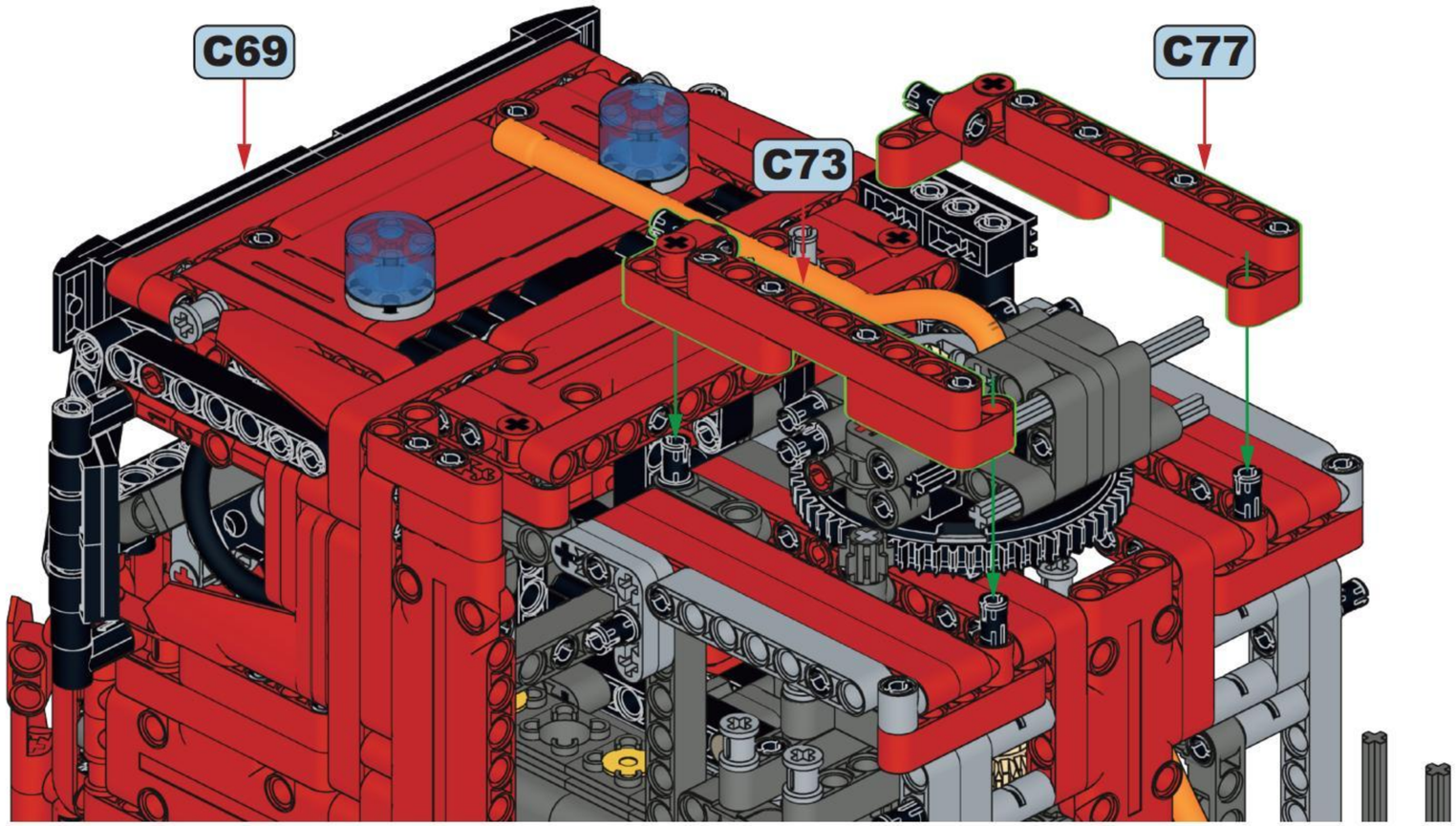


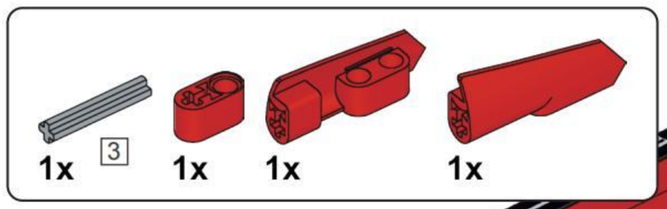


## C79

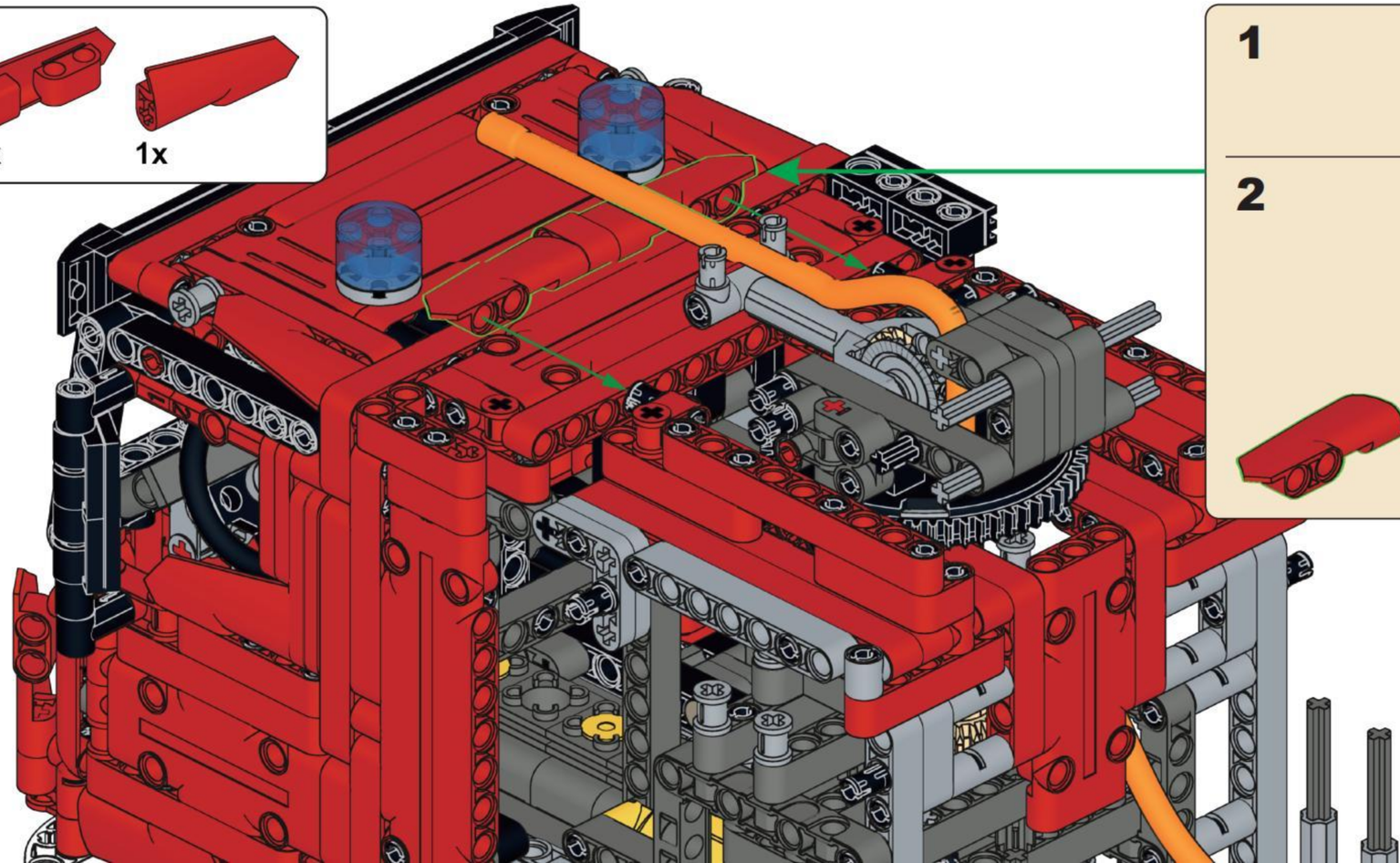

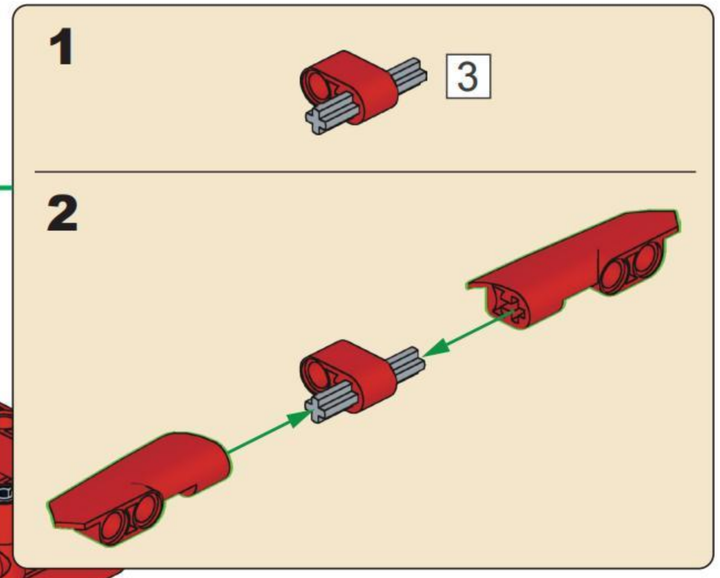


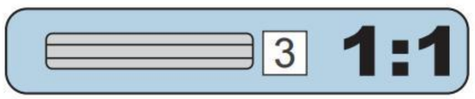

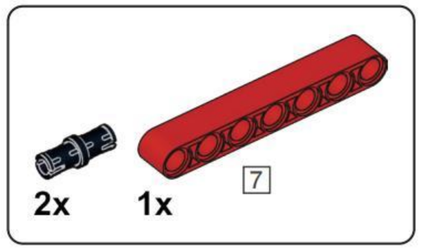


## C80

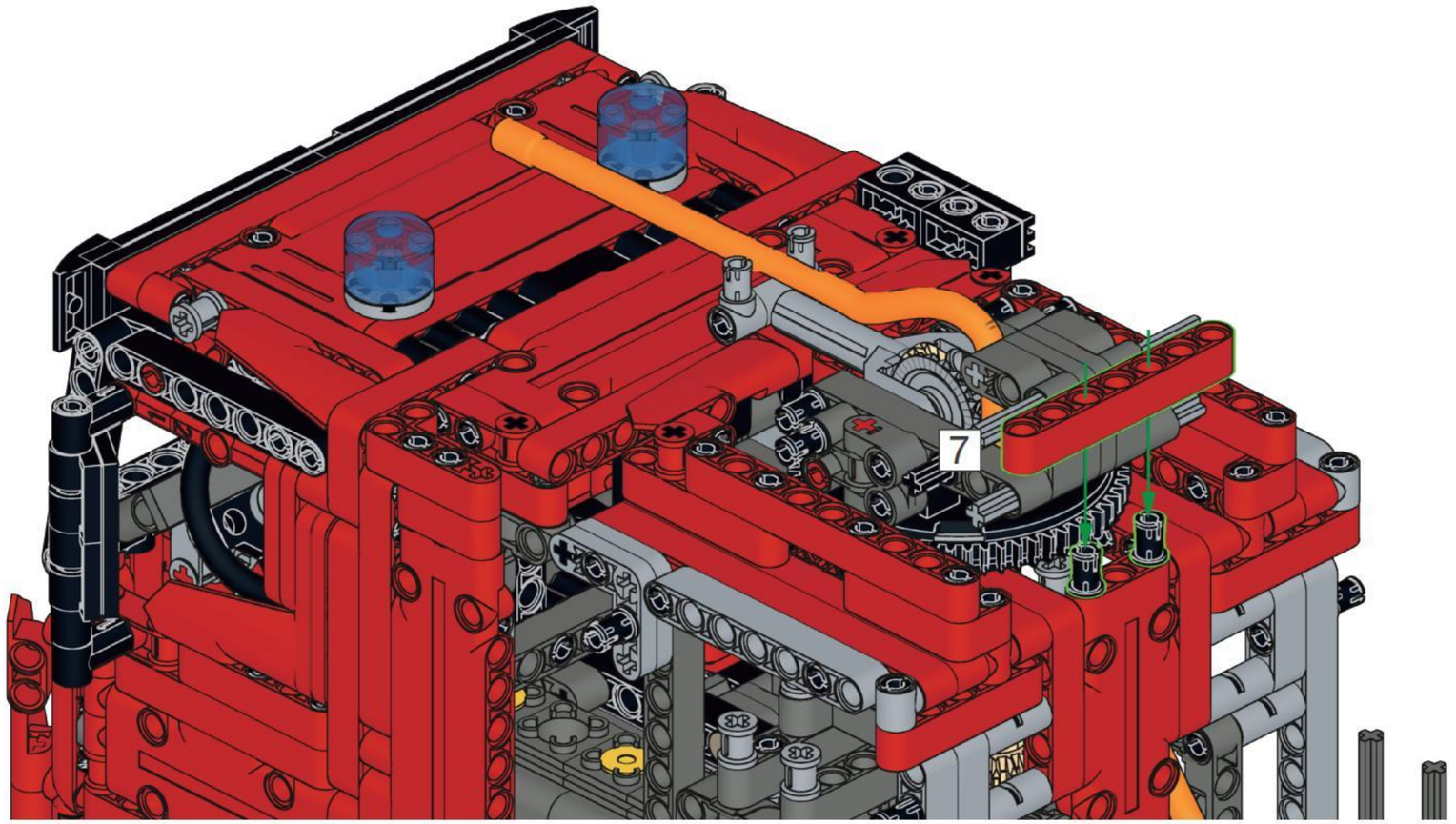


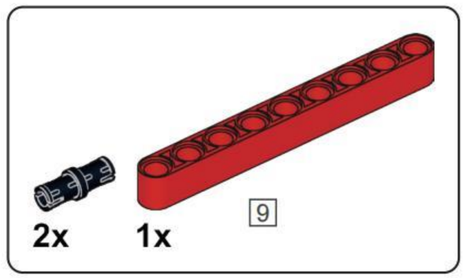


## C81

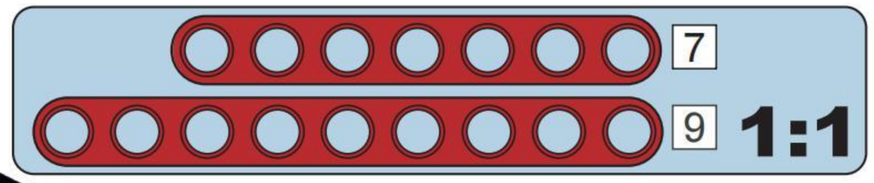


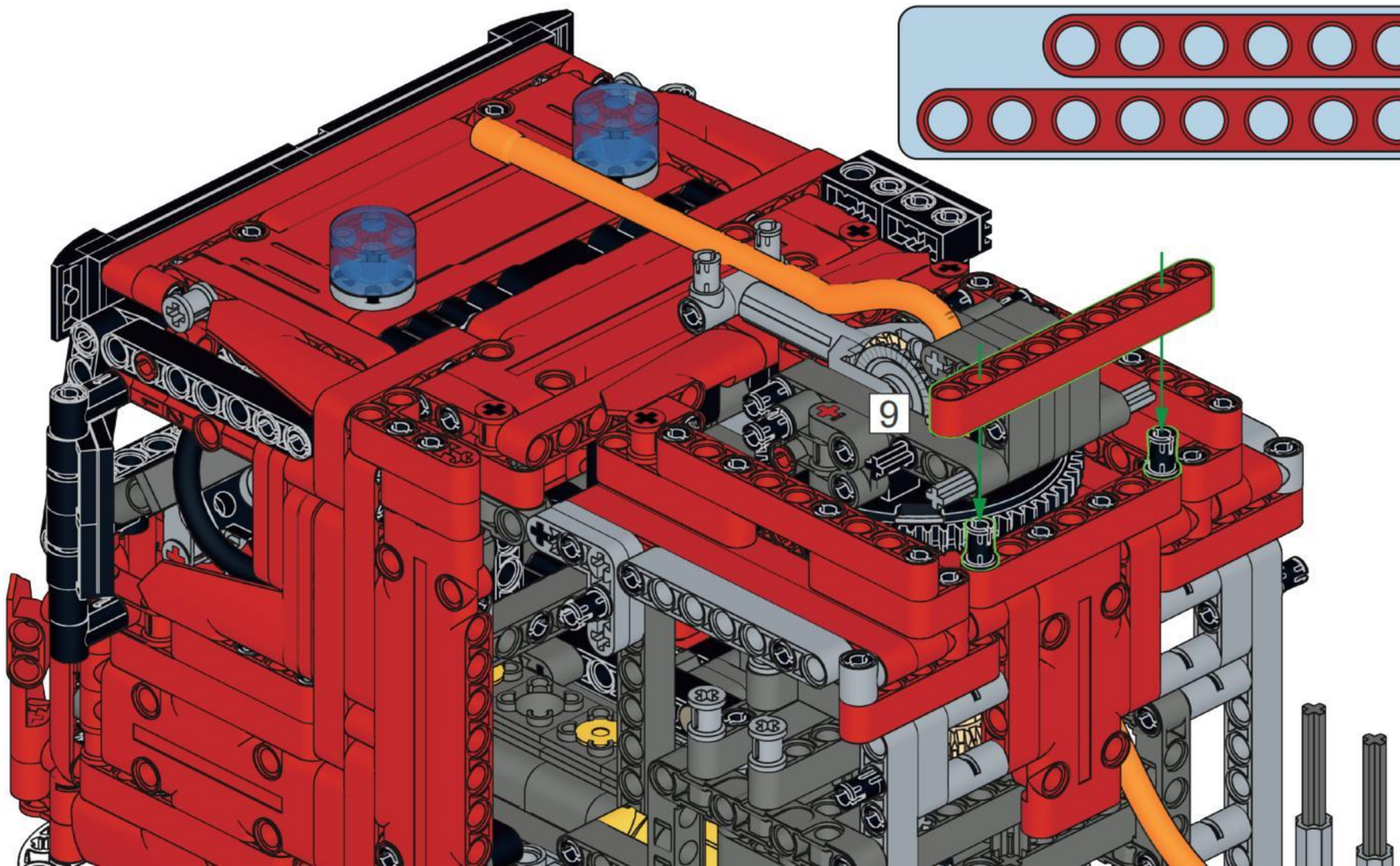

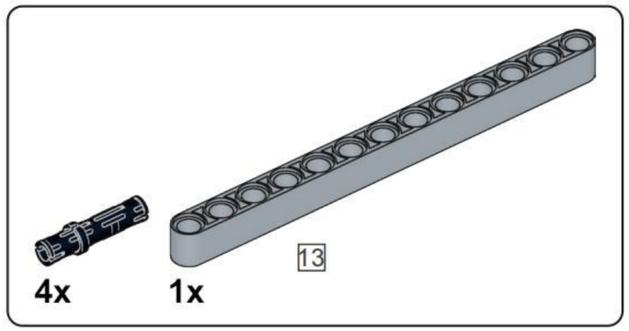


## C82

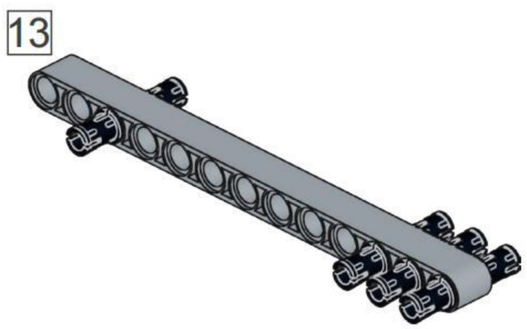


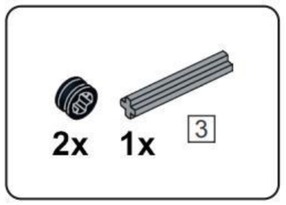


## C83

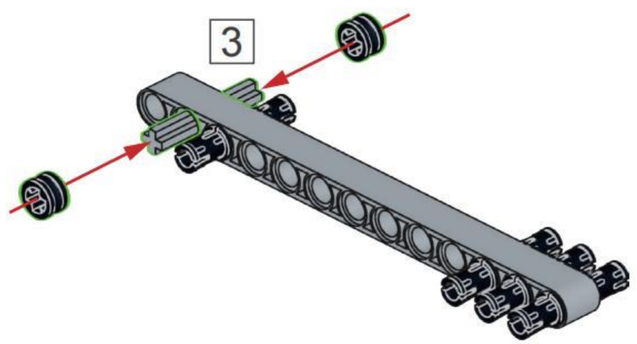


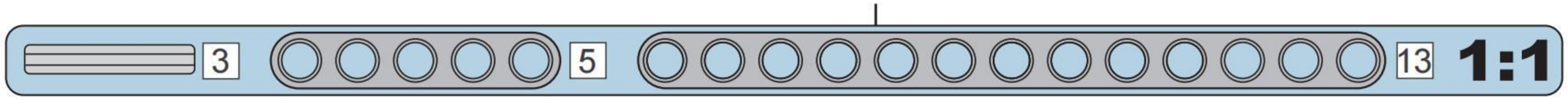


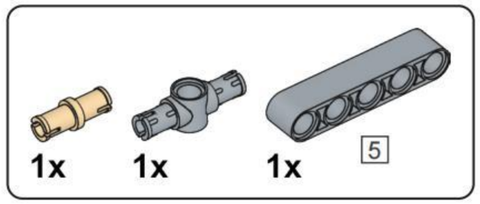


## C84

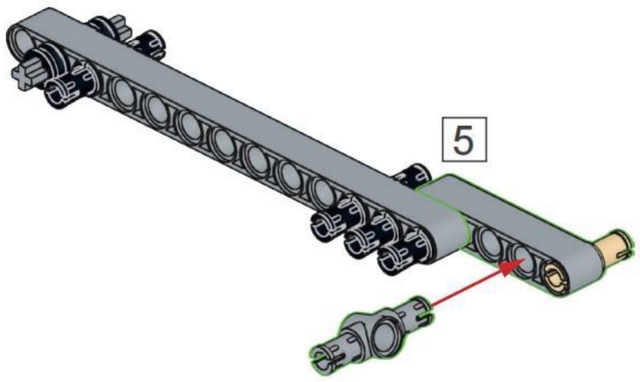


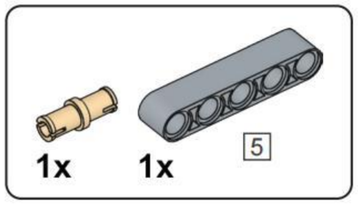


## C85

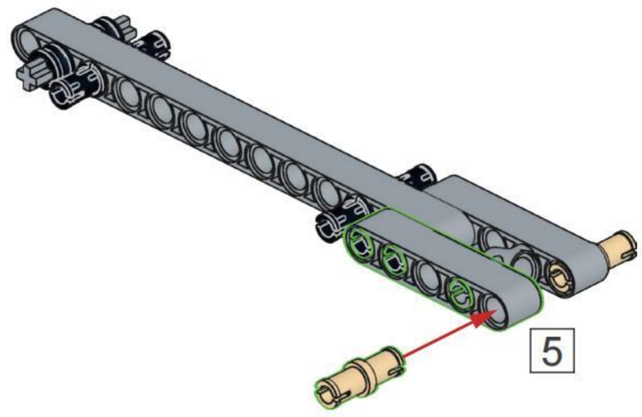

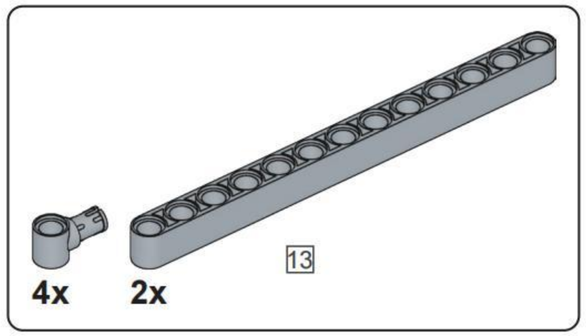


## C86

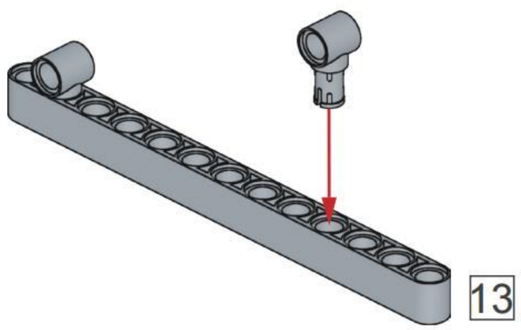


x2

## C87

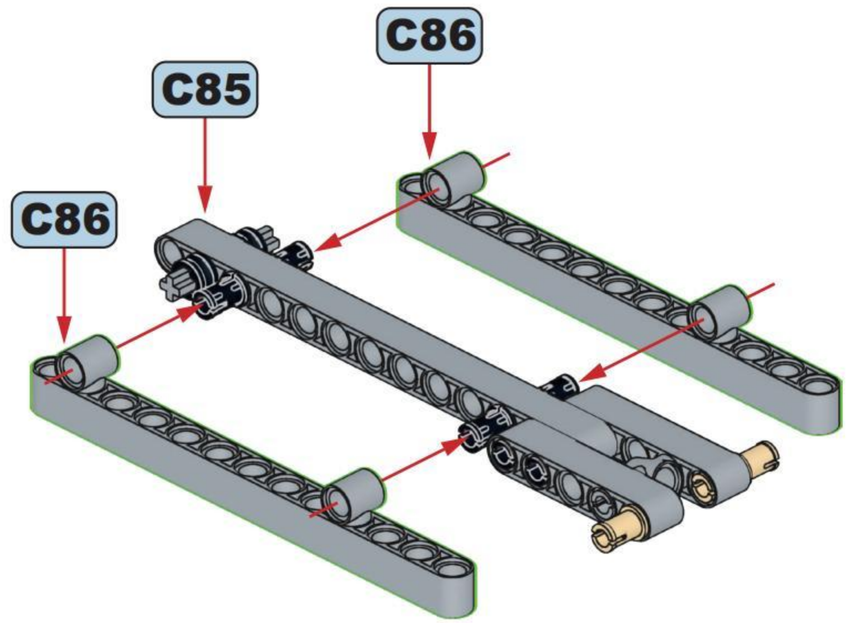


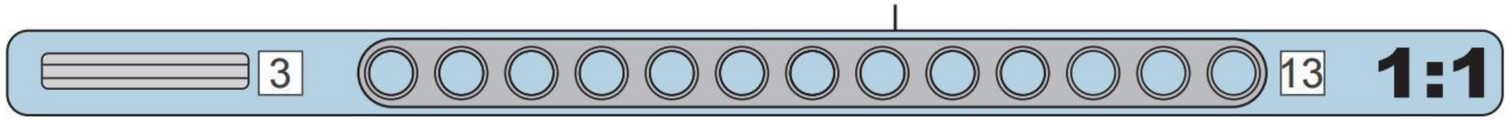


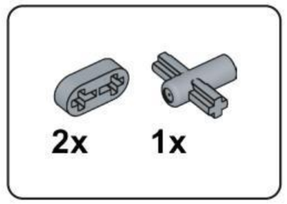


## C88

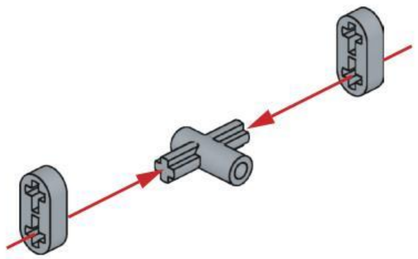

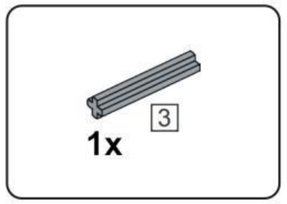


## C89

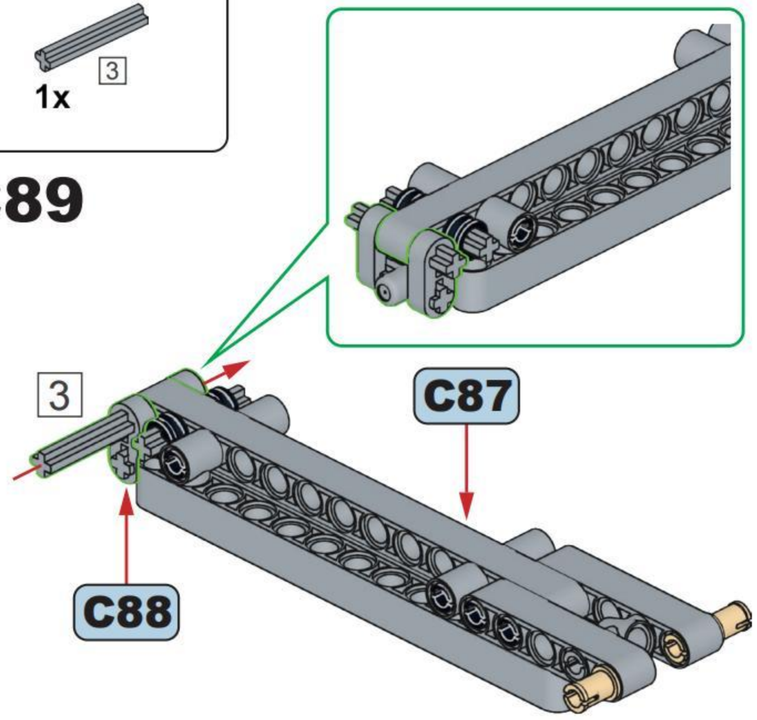


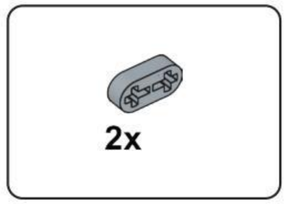


## C90

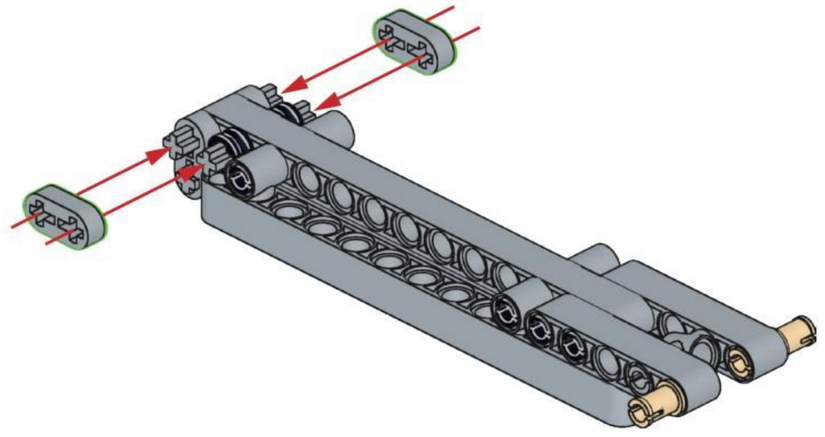

# C91

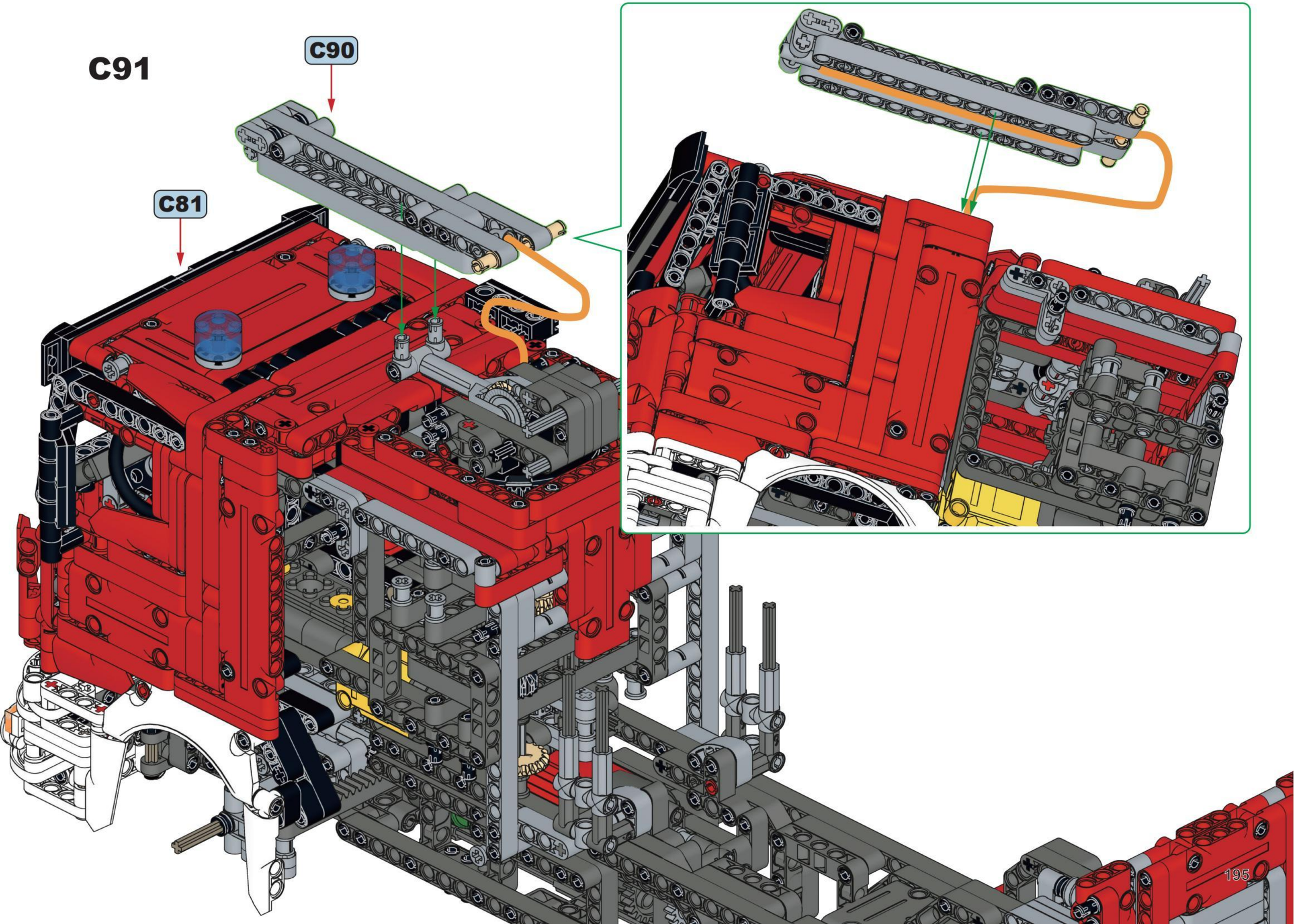

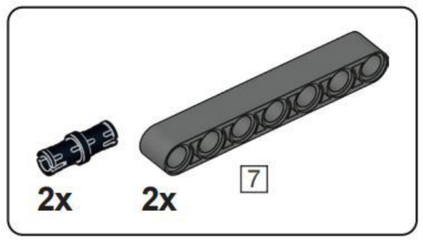


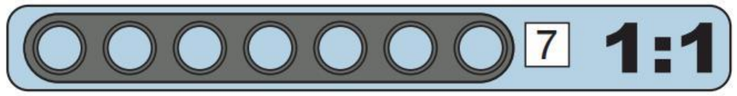


## C92

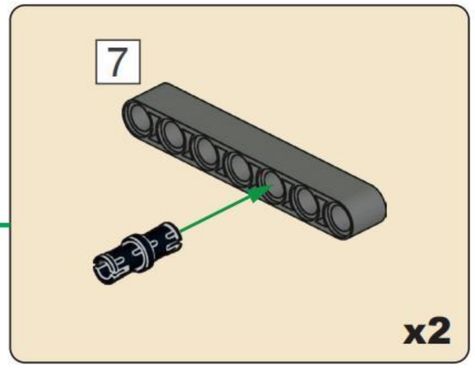

2x 4x

# C93

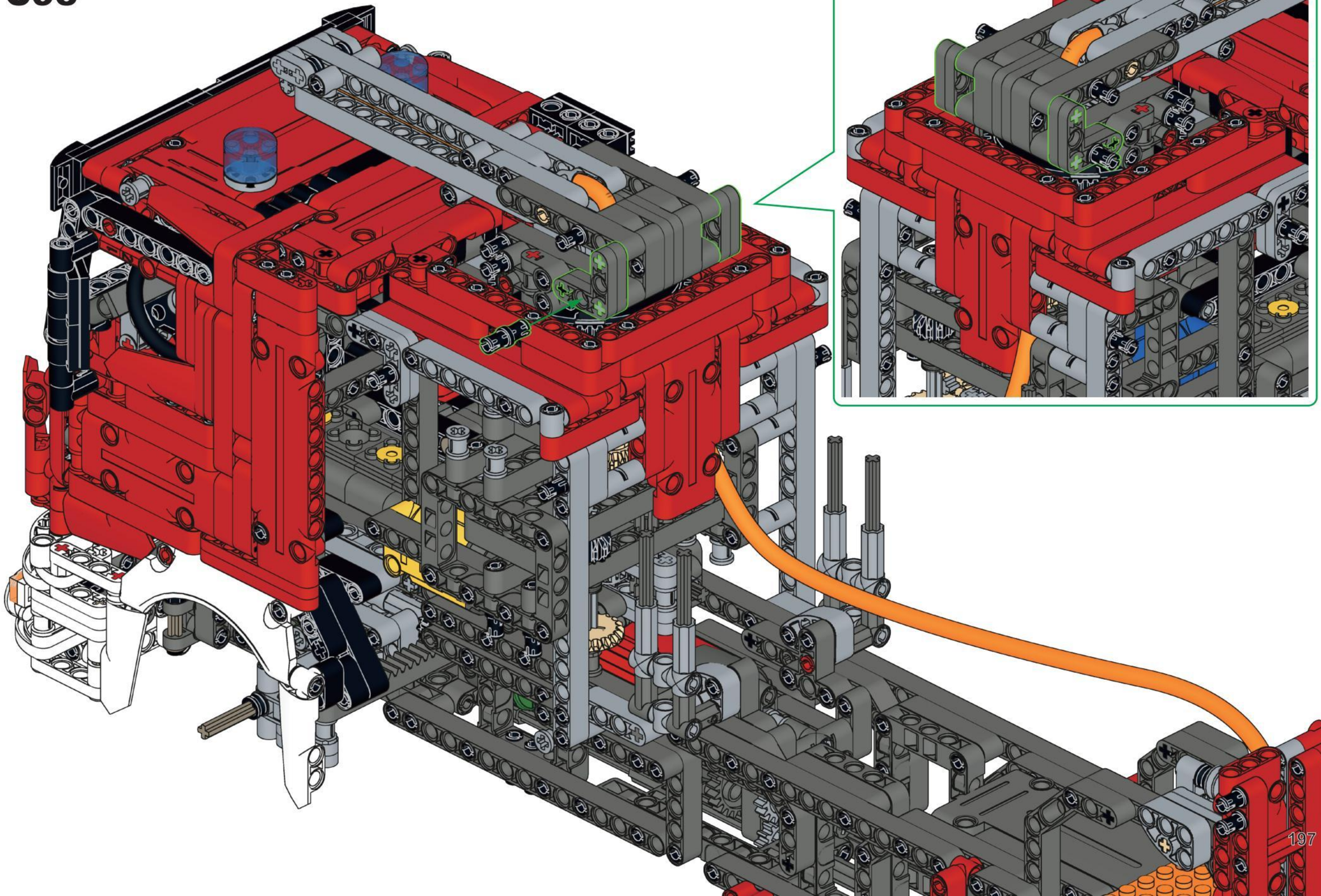

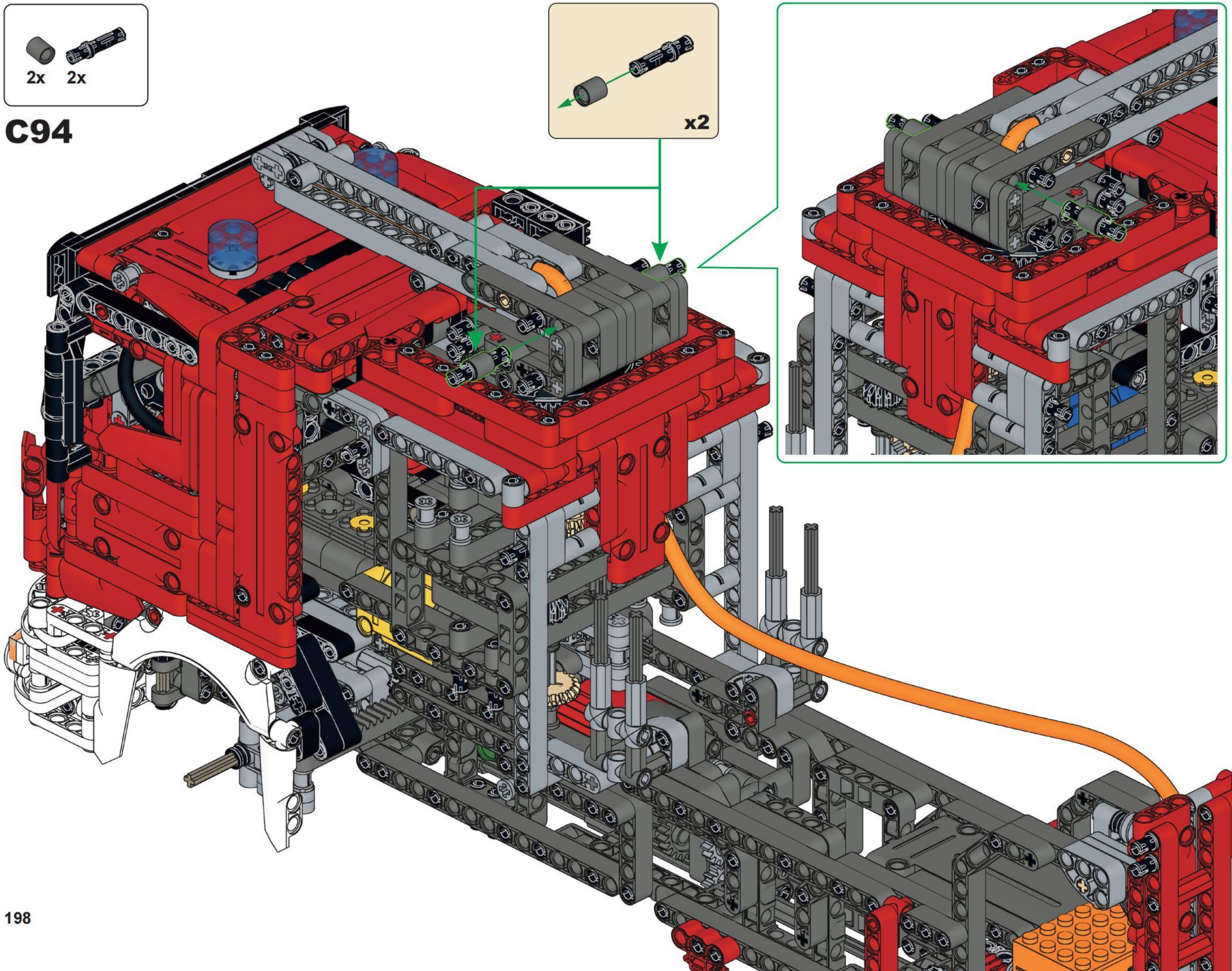


C94

2x 2x

# C95

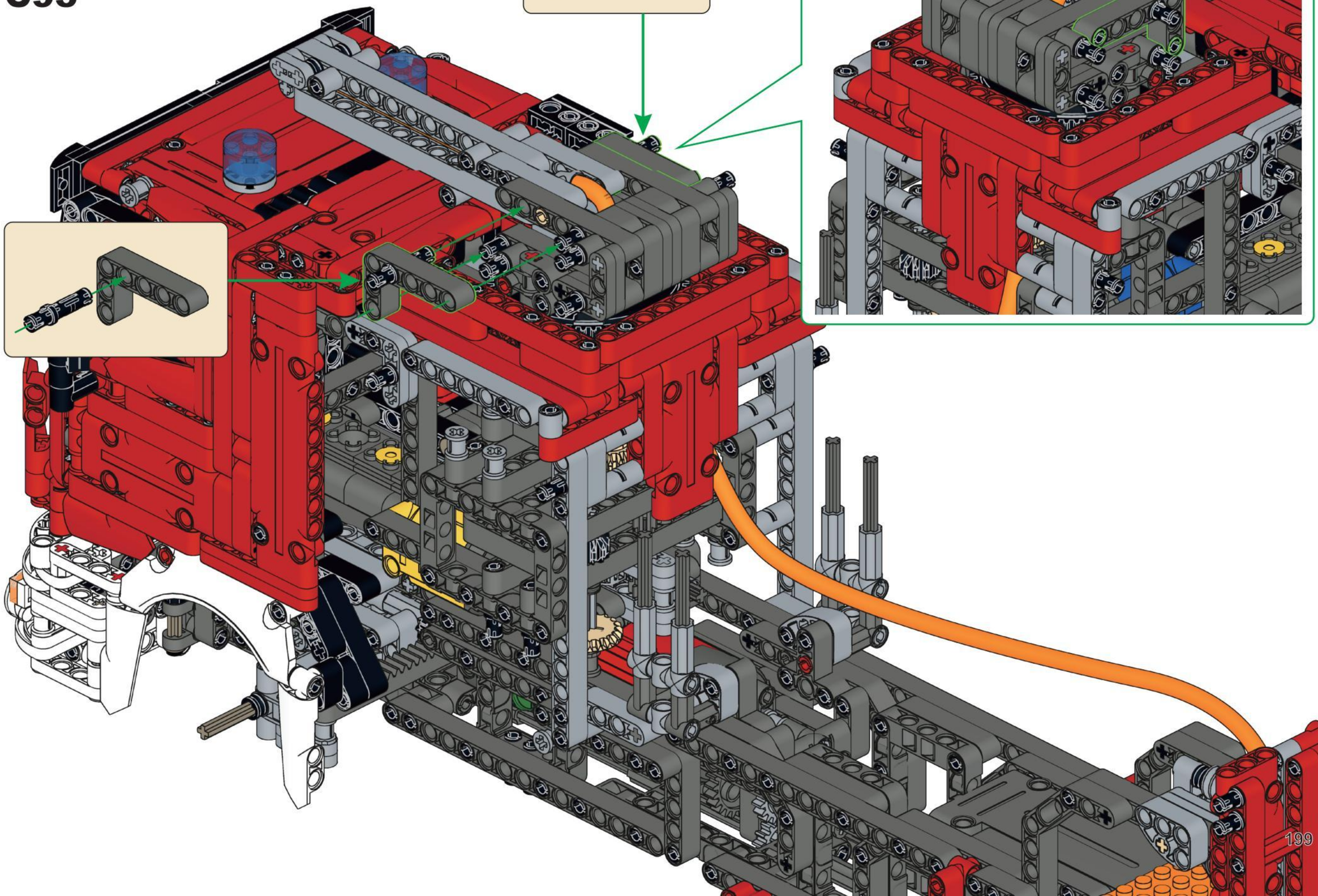

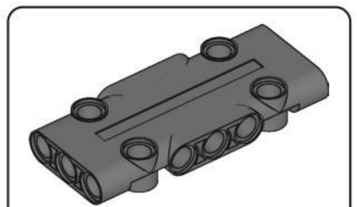


## C96

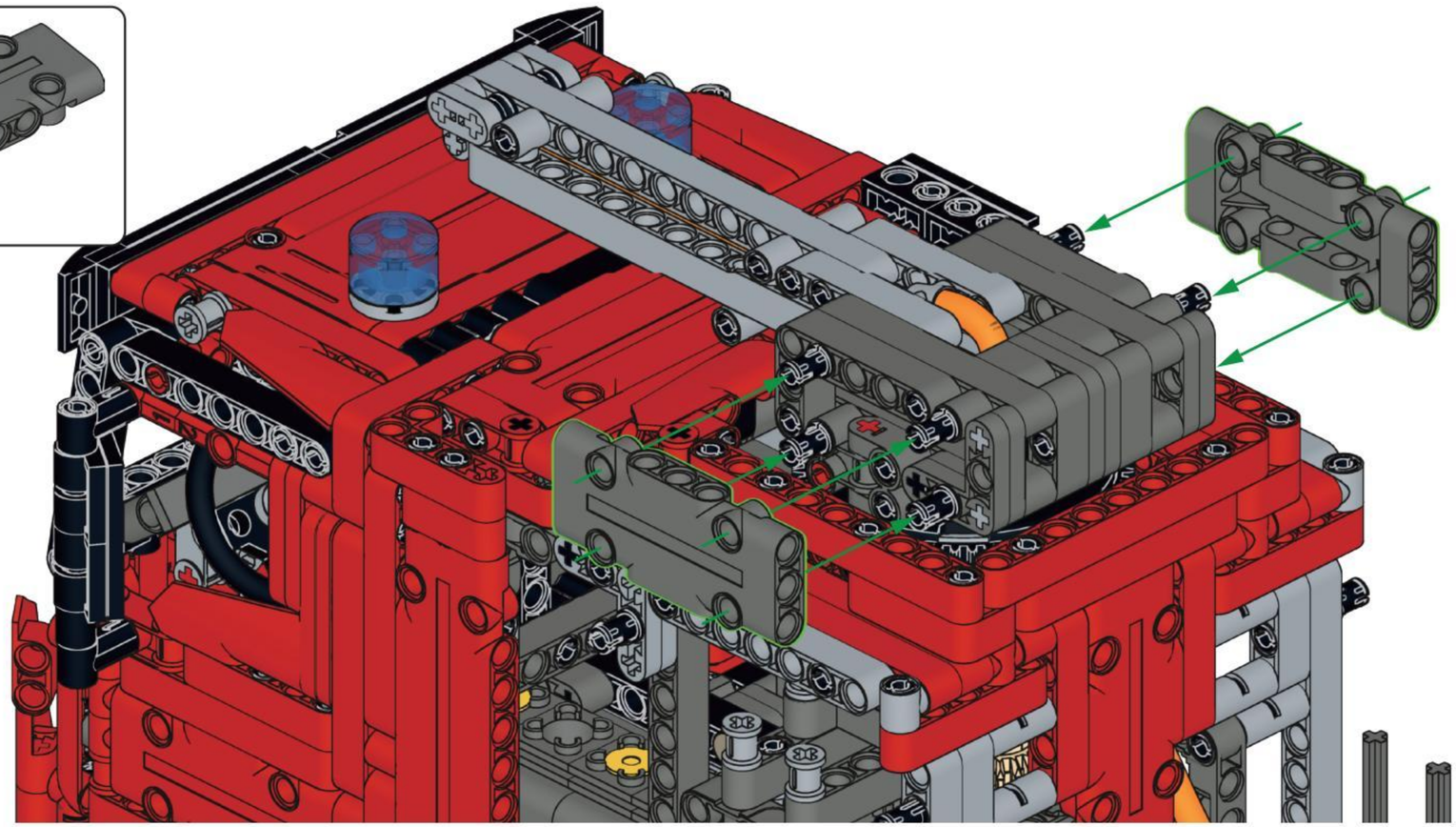

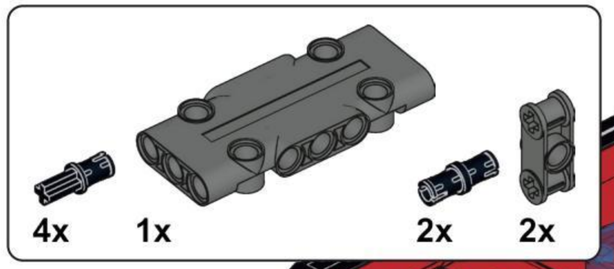


## C97

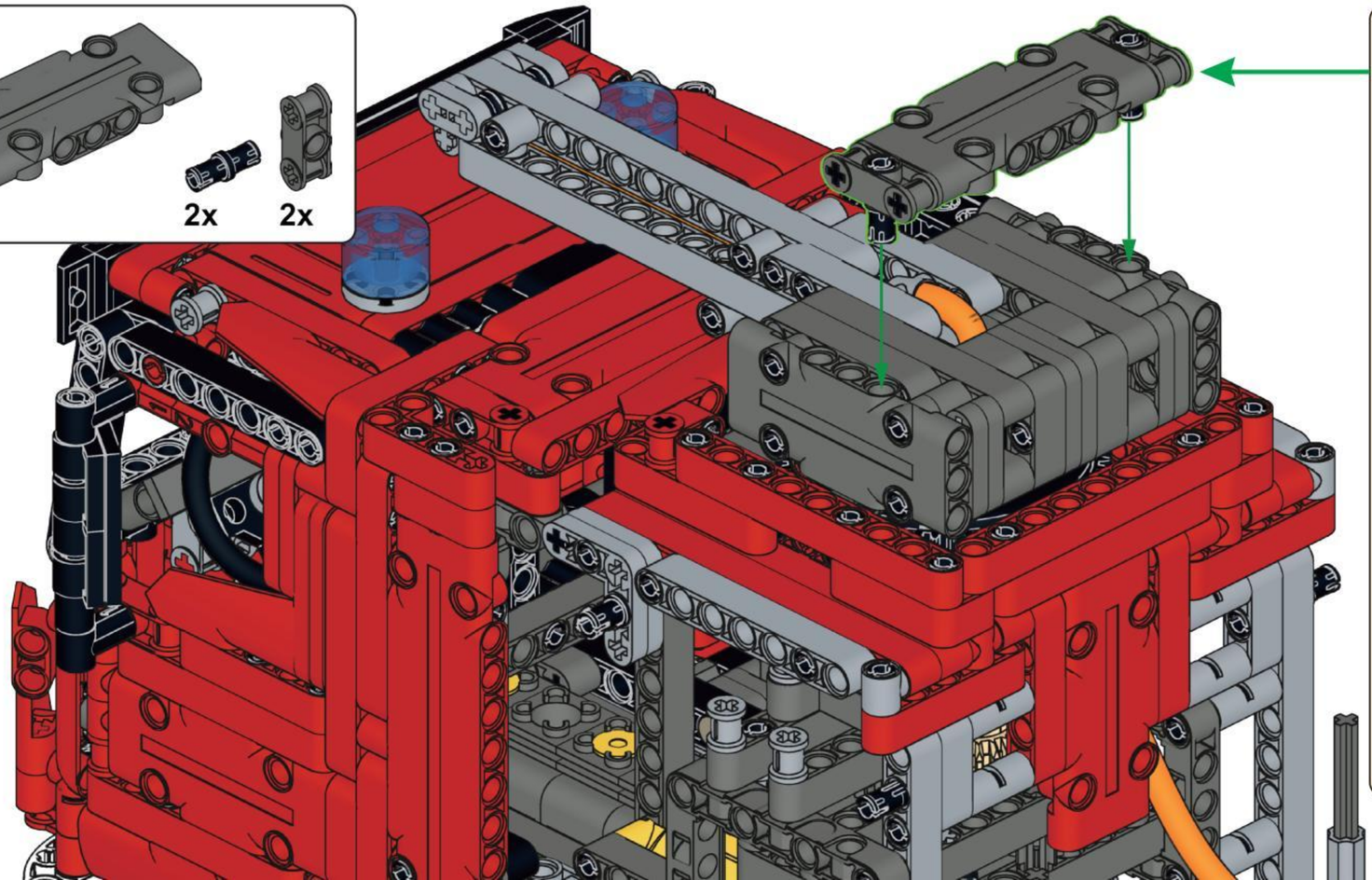

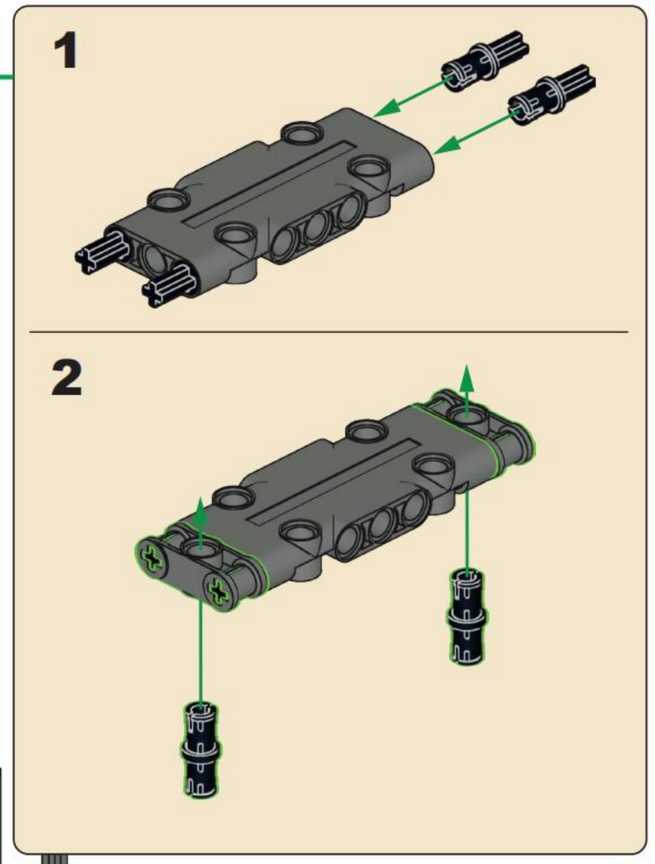

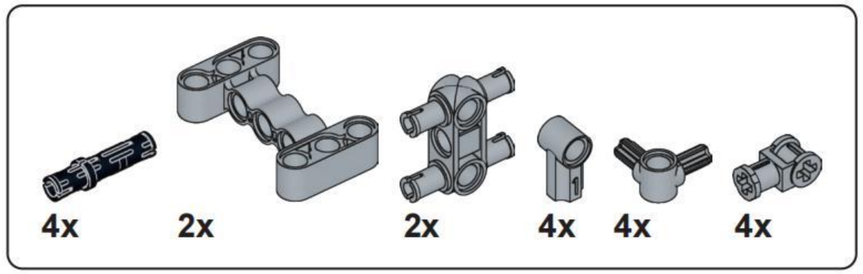


## C98

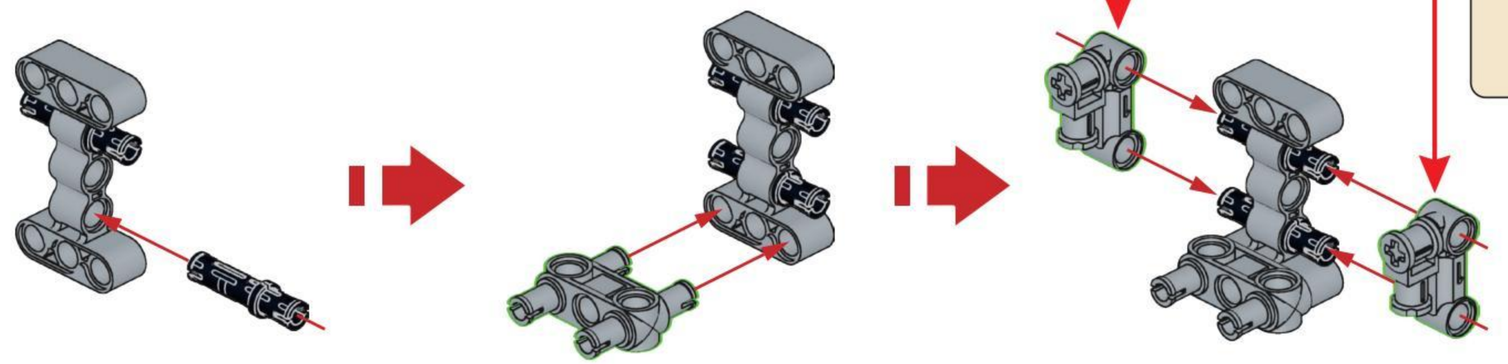

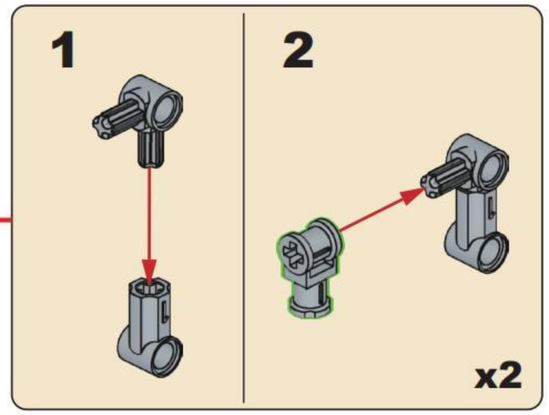


x2

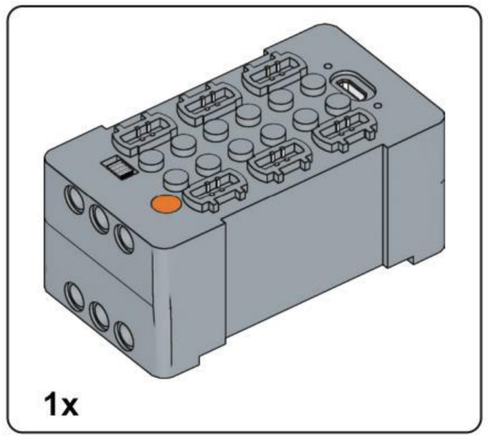


## C99

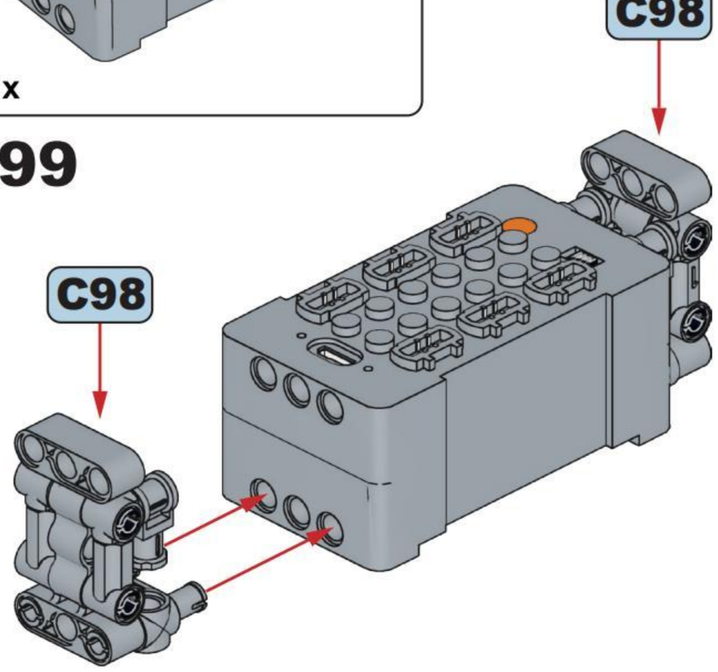


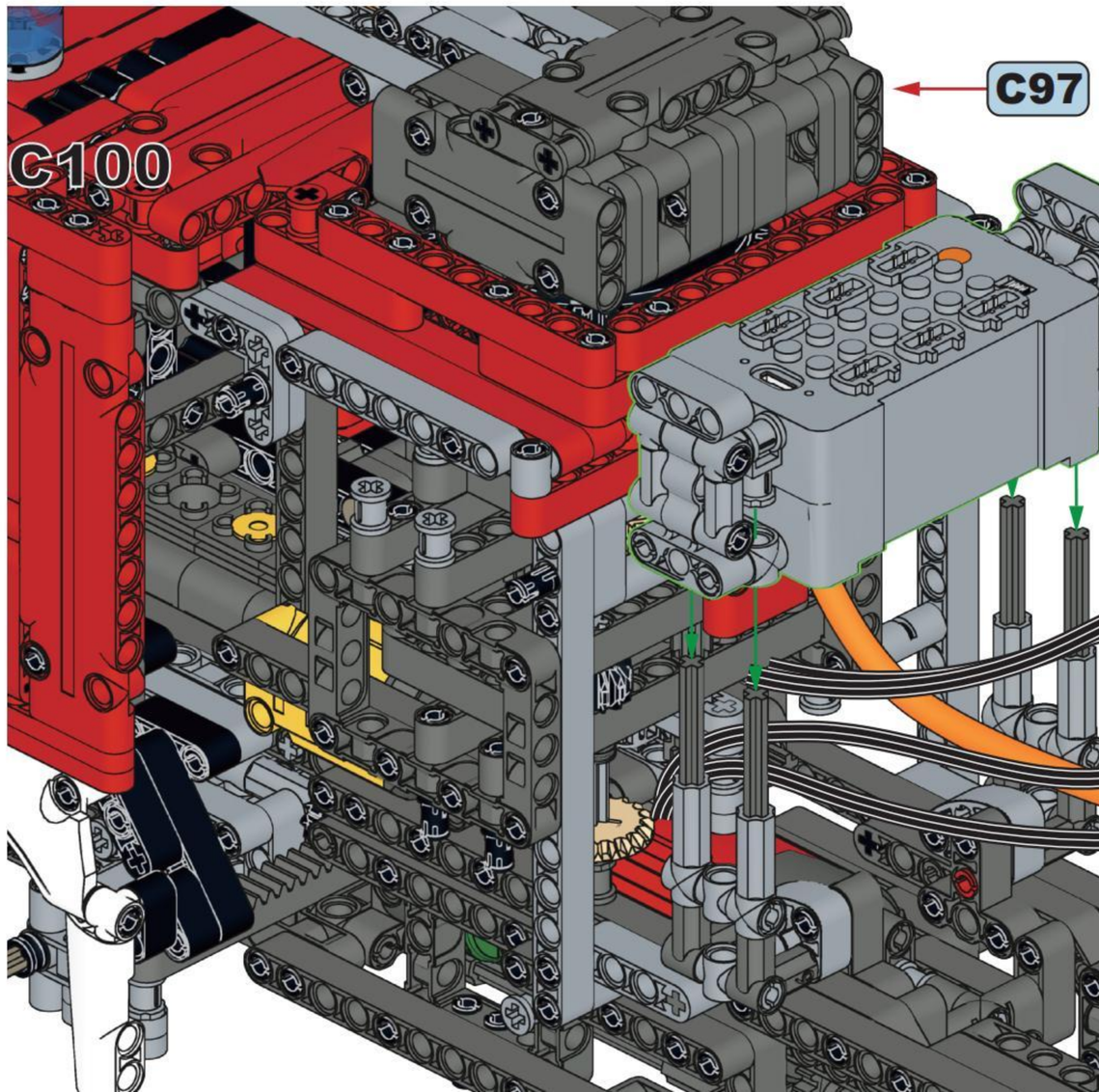

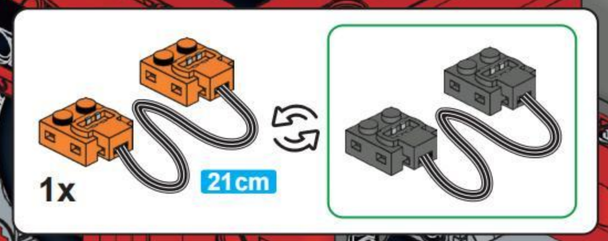


C101

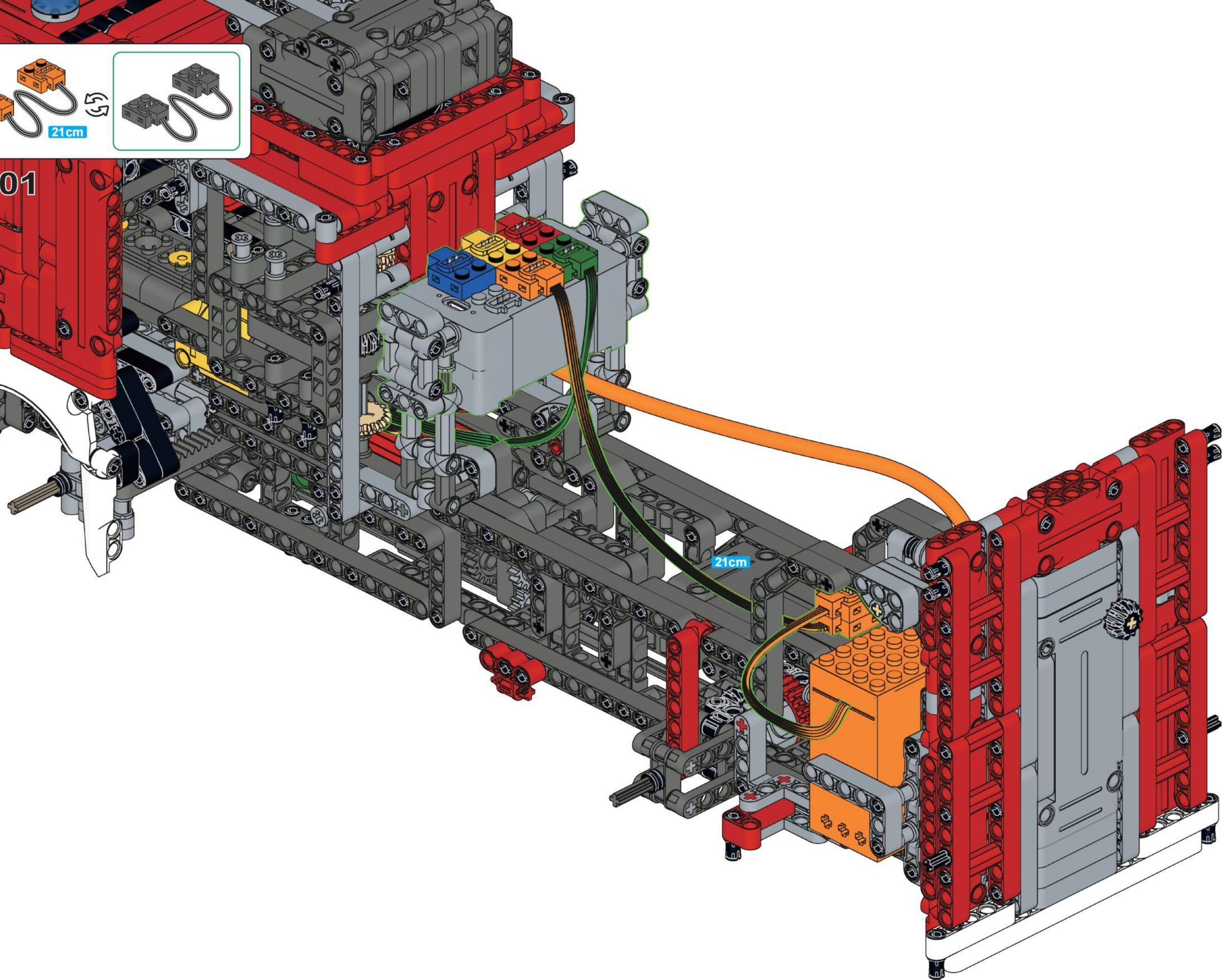

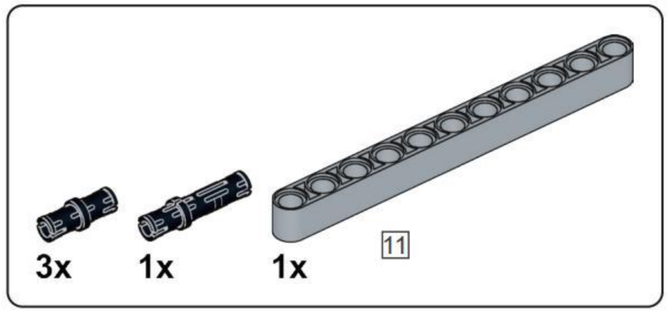


## C102

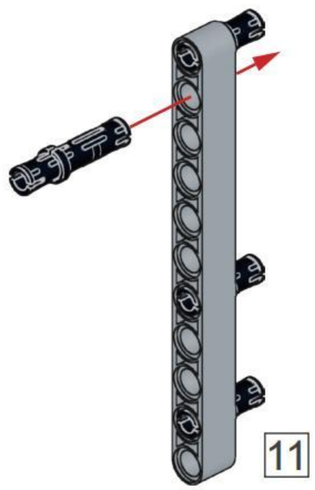


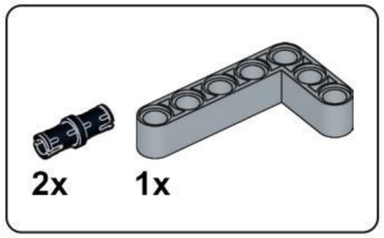


## C103

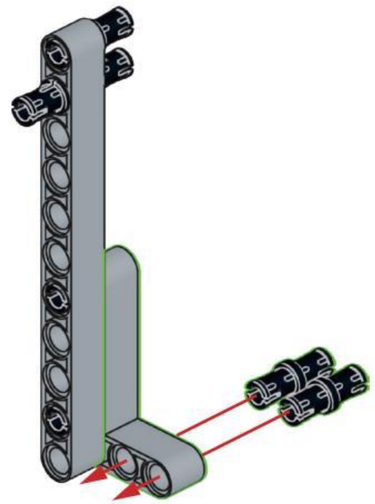

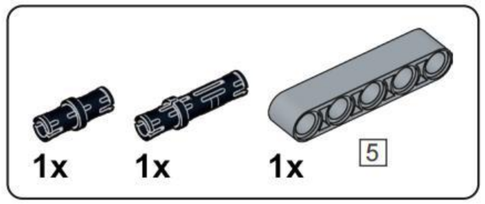


## C104

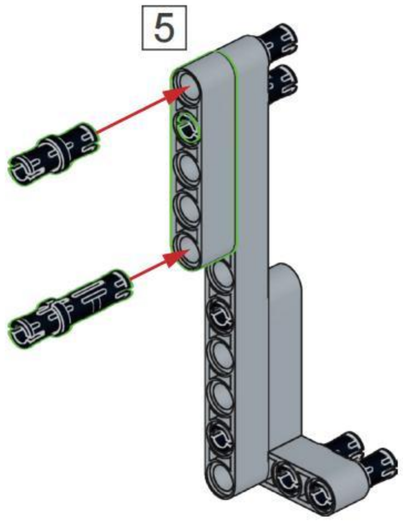


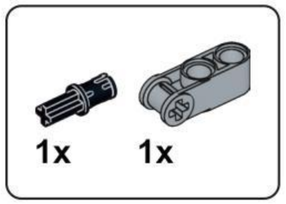


## C105

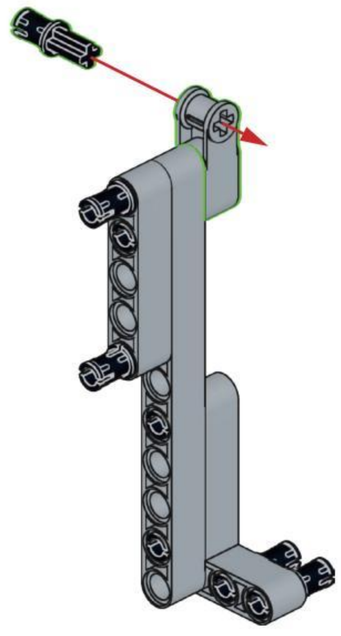

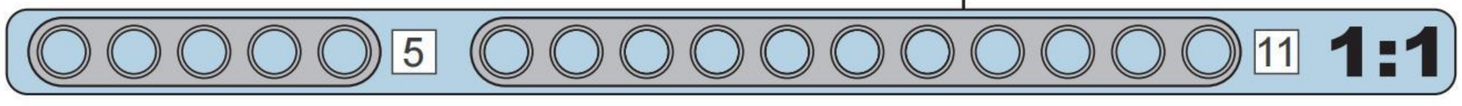

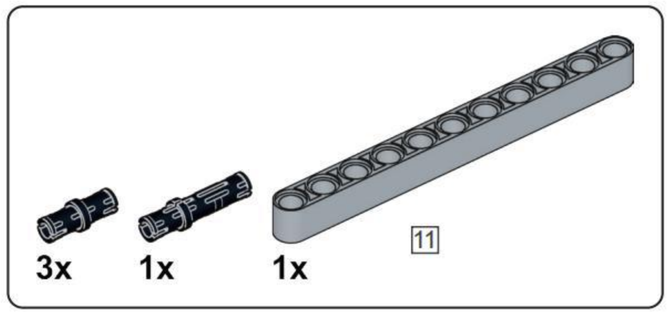


## C106

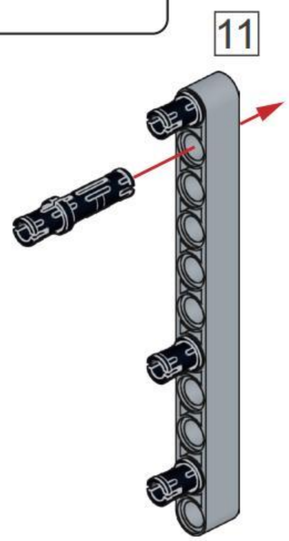


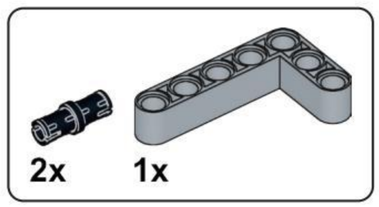


## C107

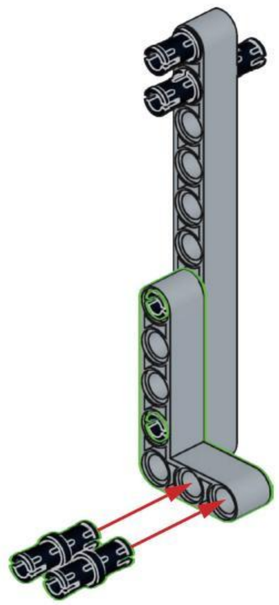

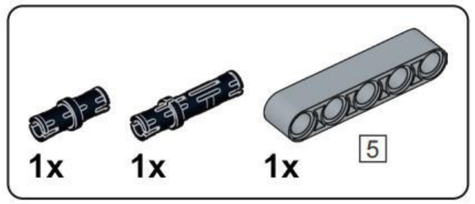


## C108

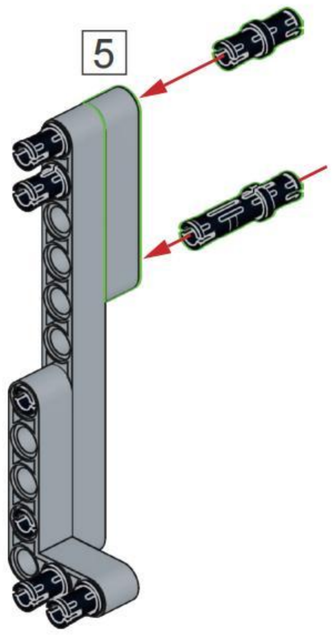


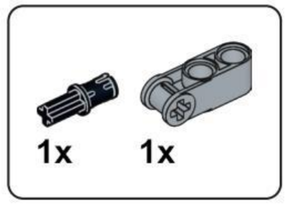


## C109

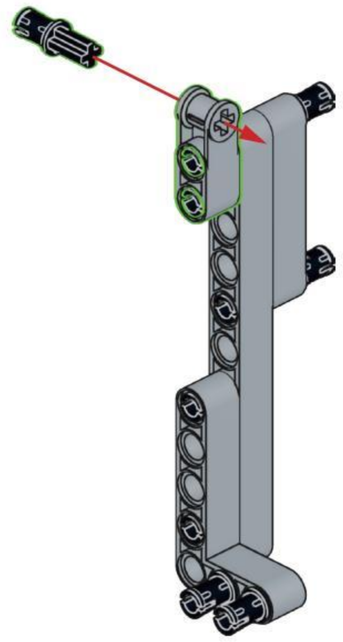

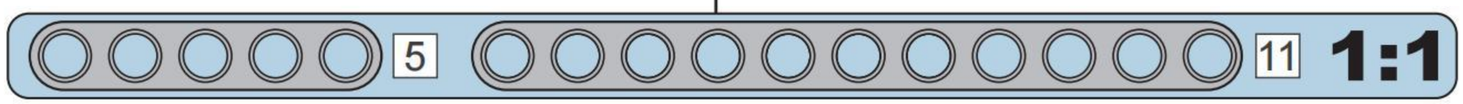

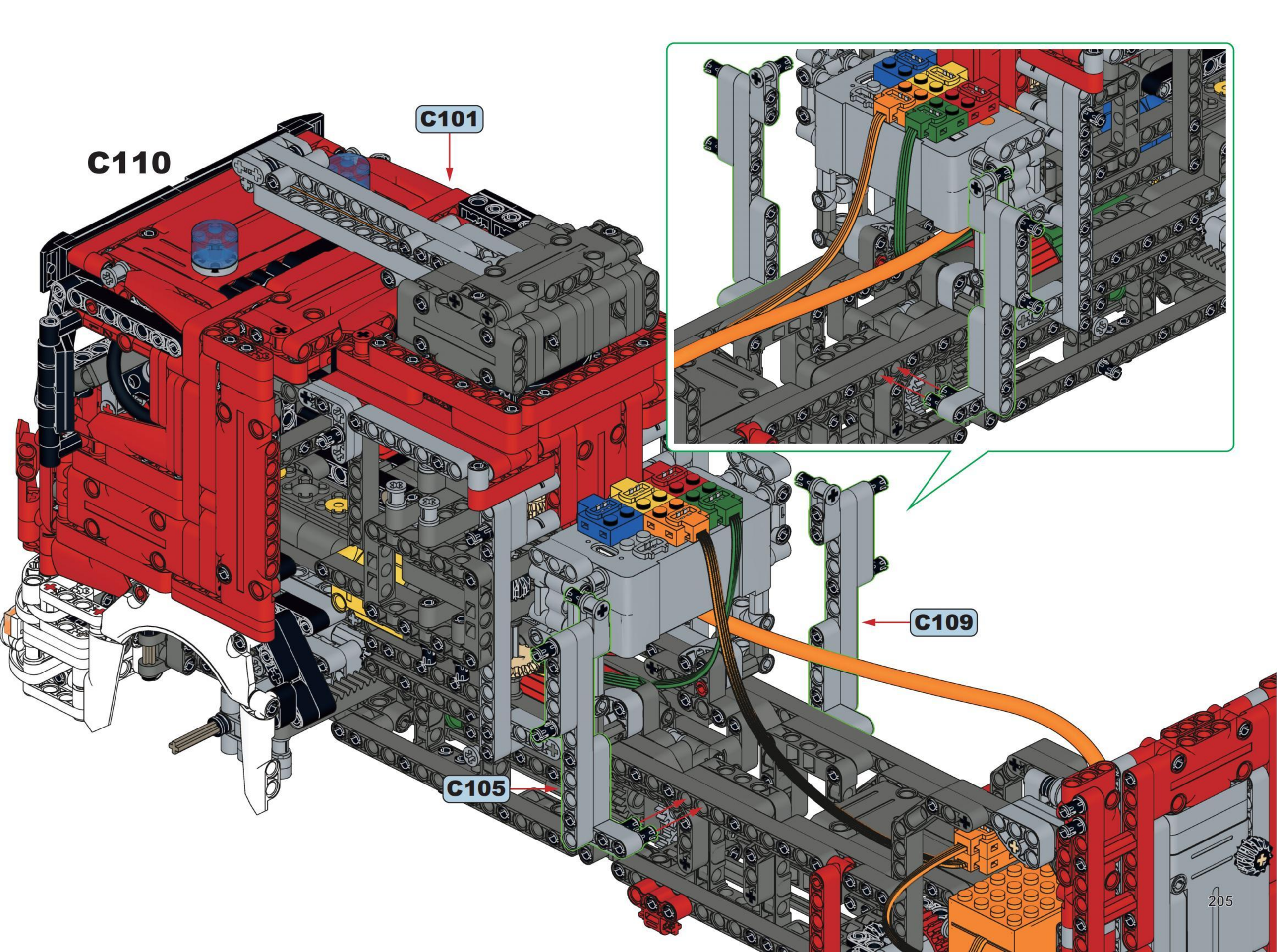
C110
C101
C109
C105

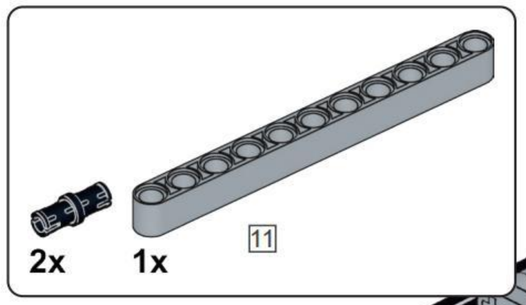


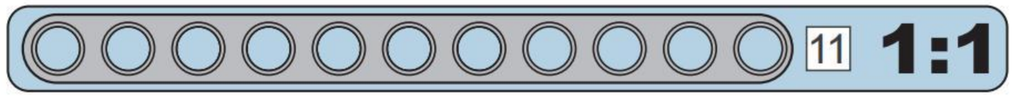


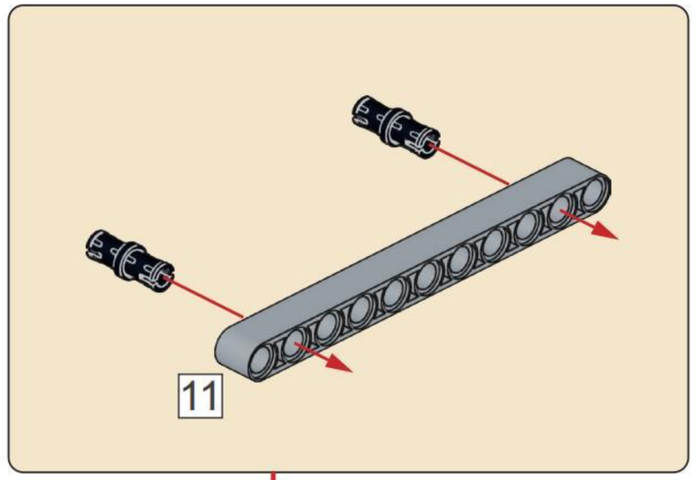


# C111

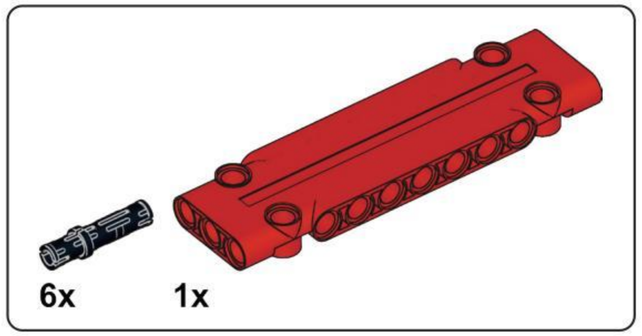


## C112

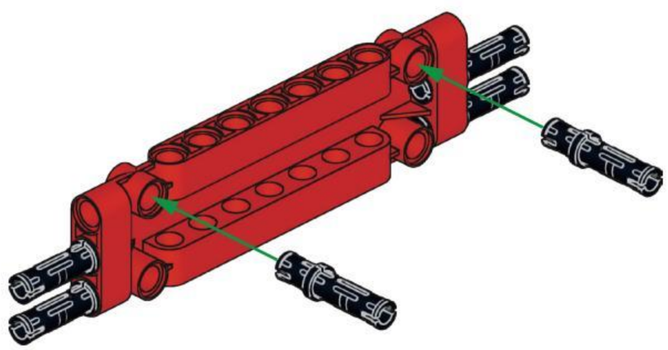

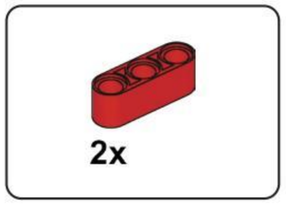


## C113

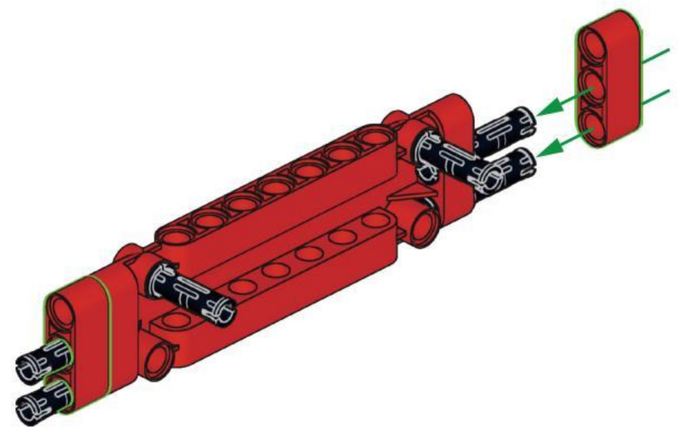

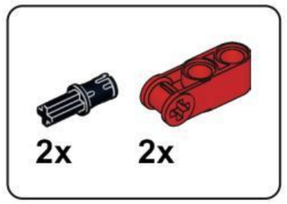


## C114

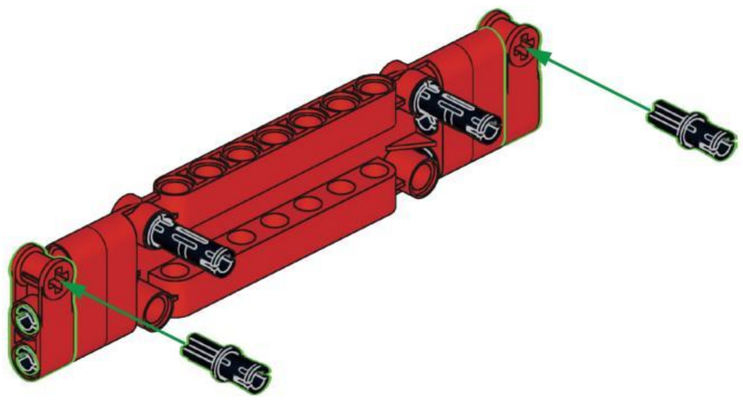

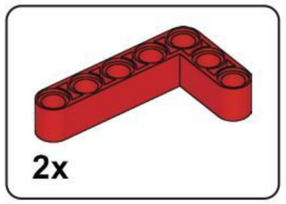


## C115

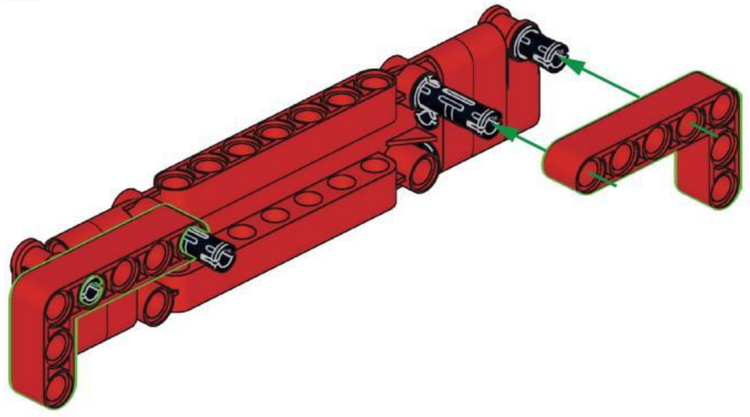

# C116

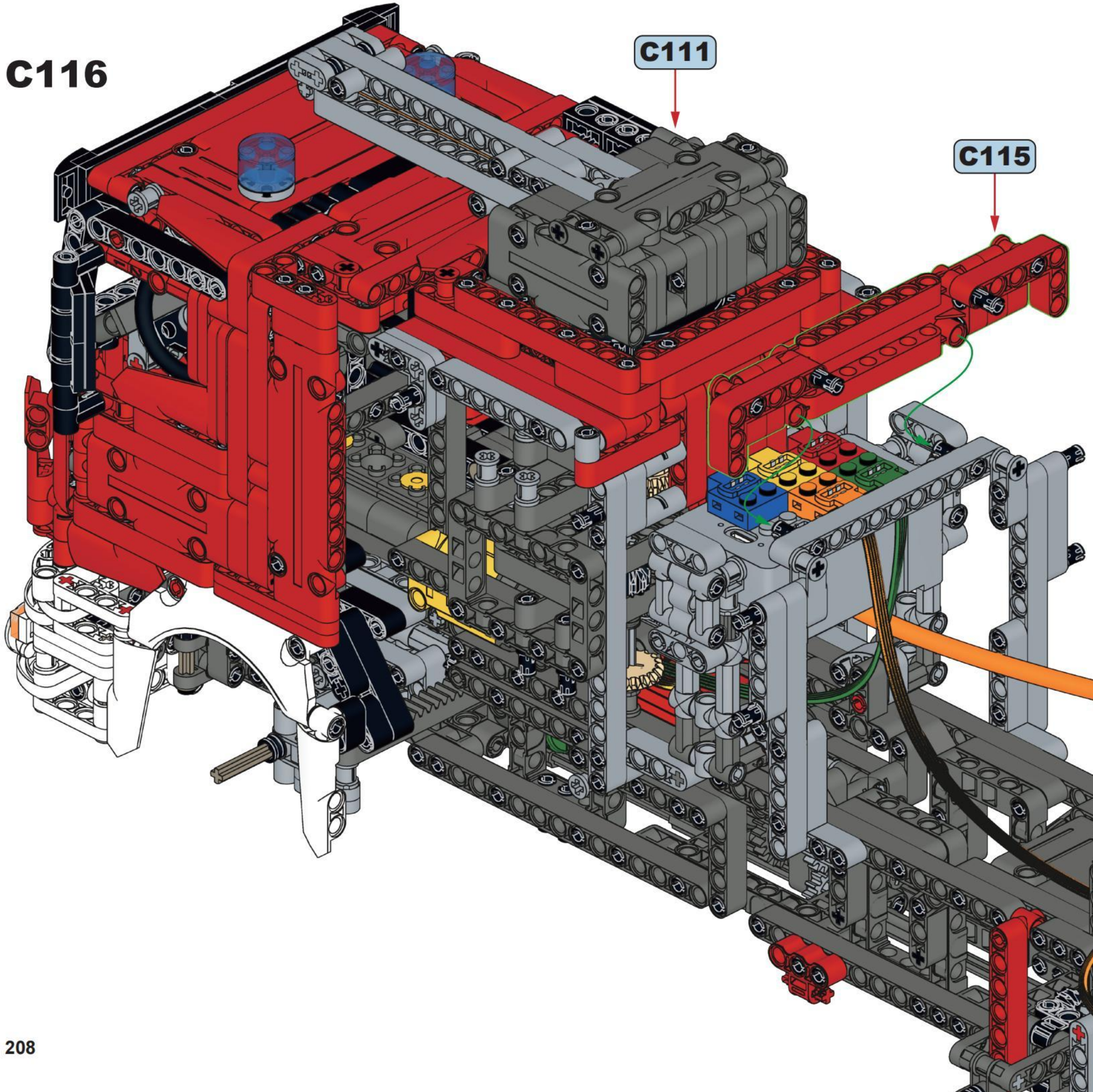

# C117

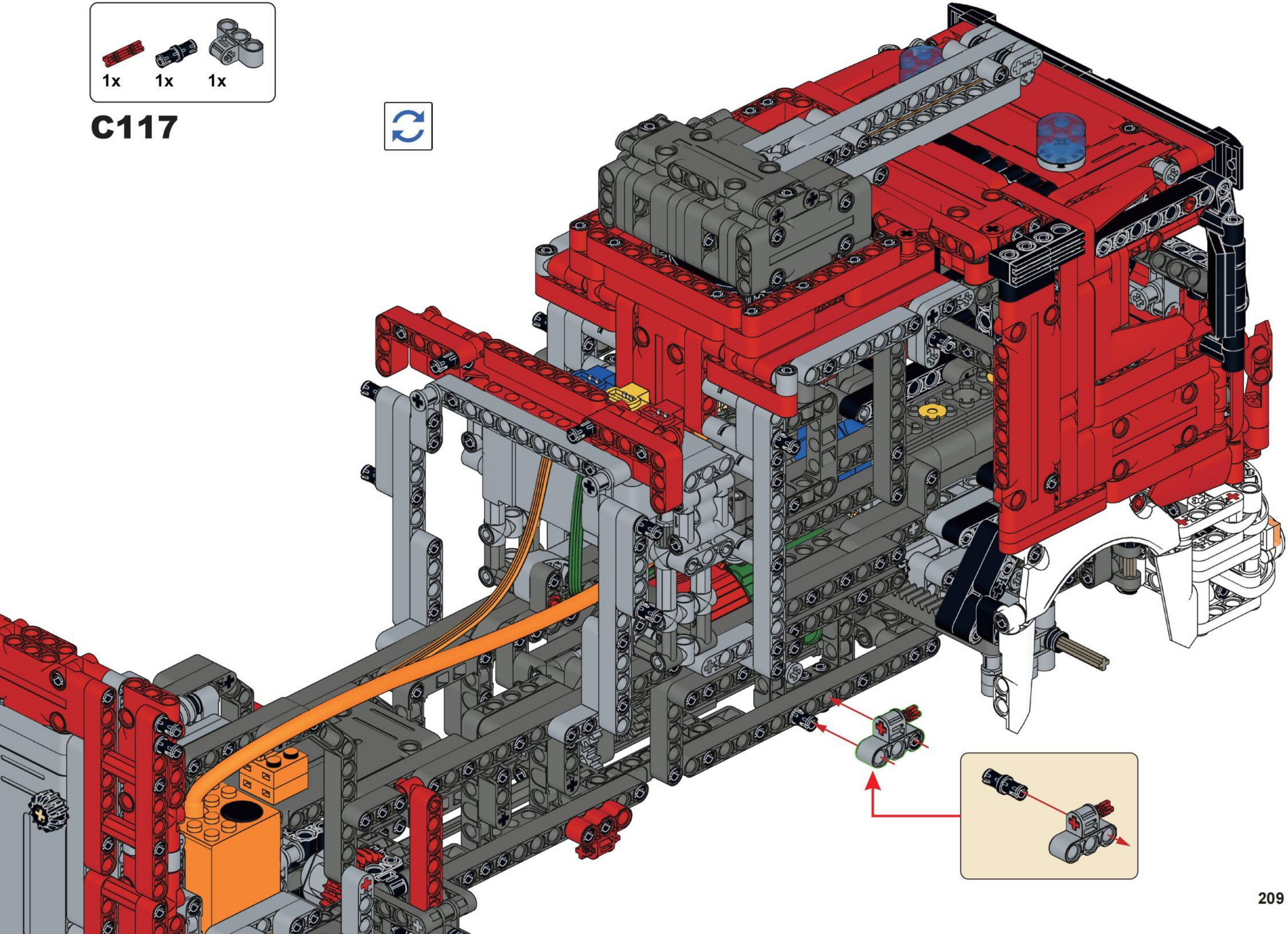

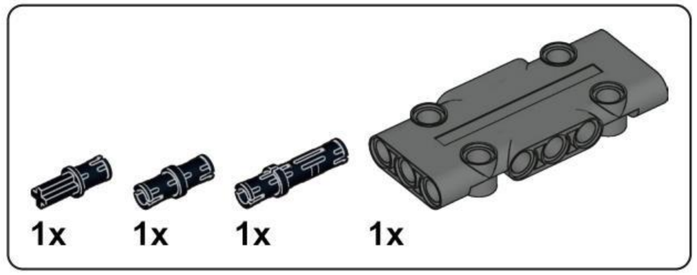


## C118

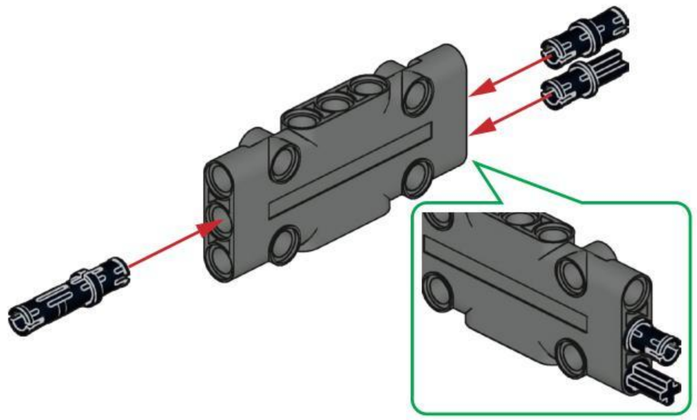

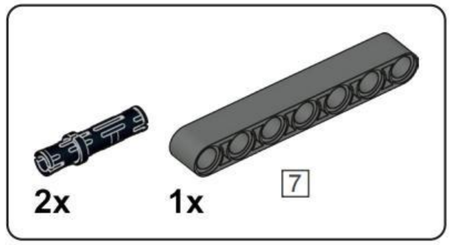


## C119

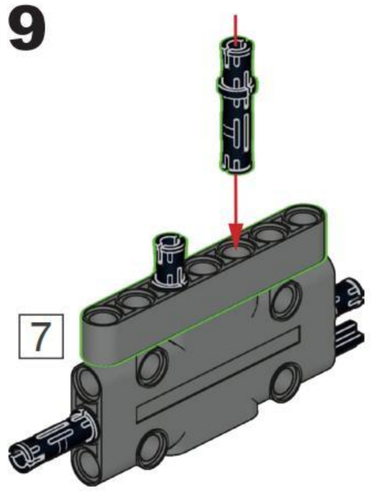


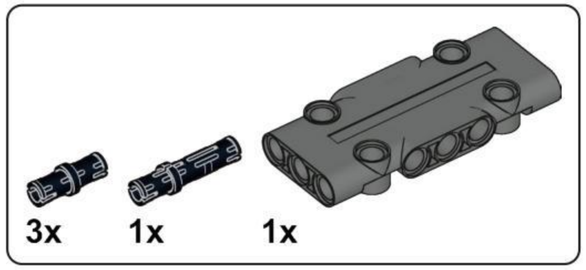


## C120

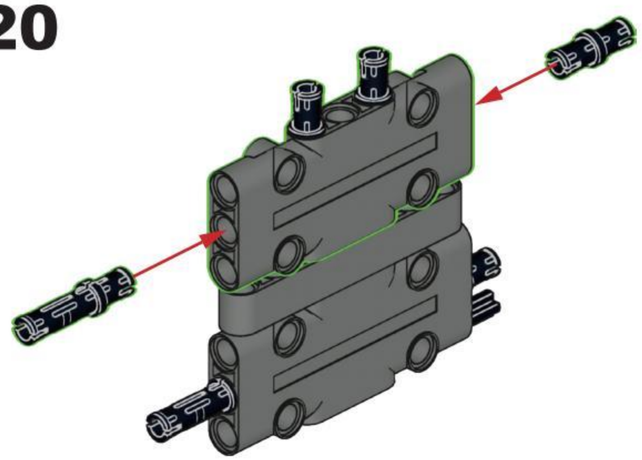

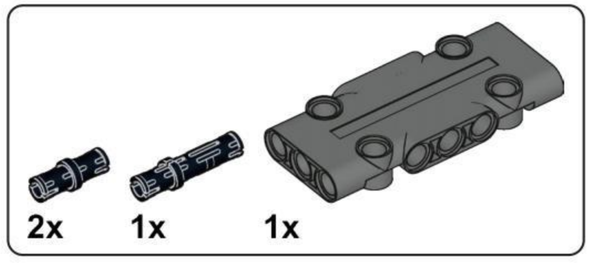


## C121

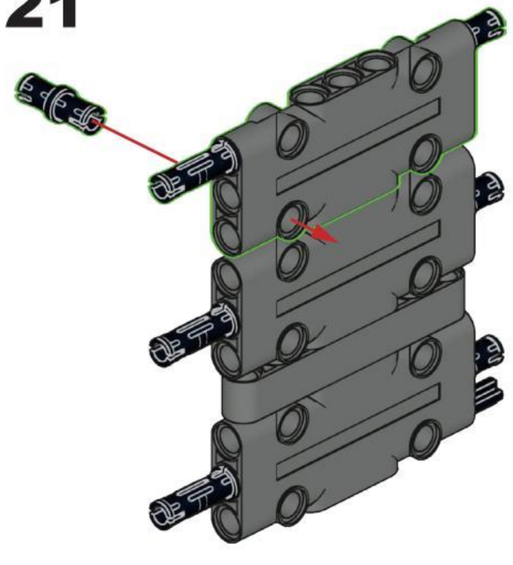

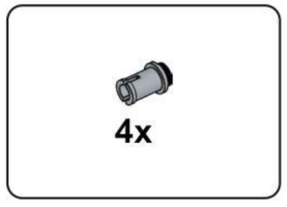


## C122

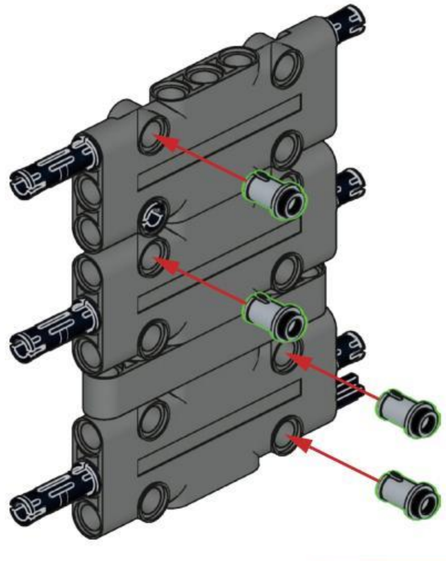

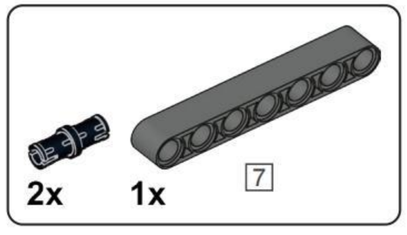


## C123

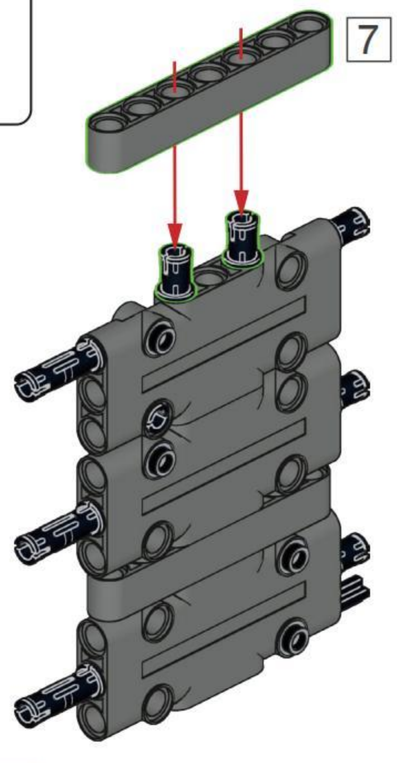


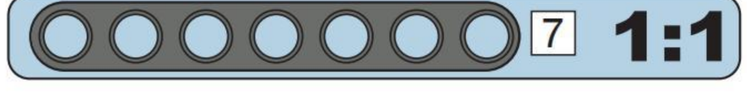

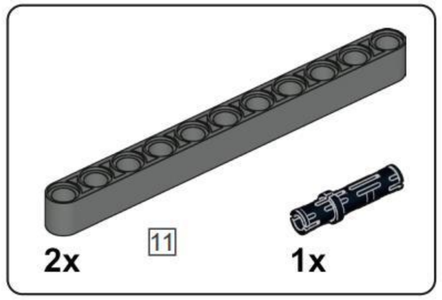


## C124

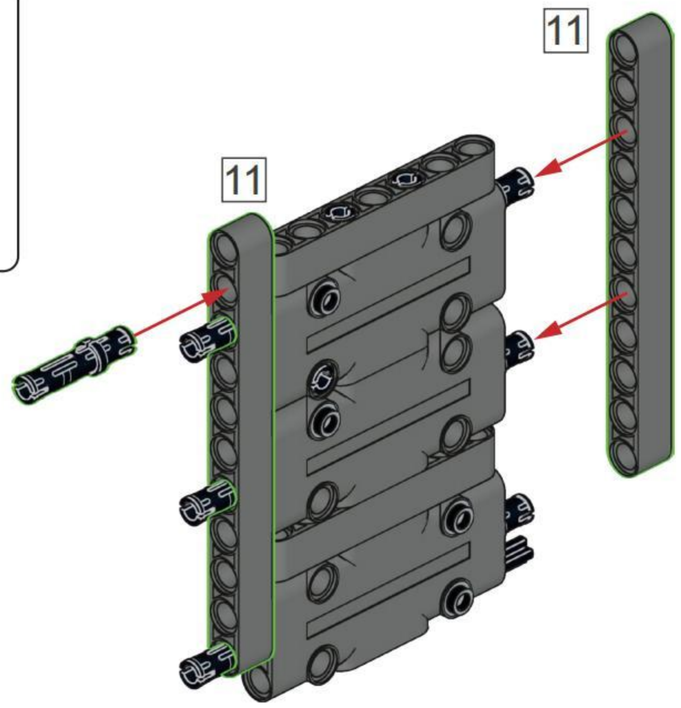


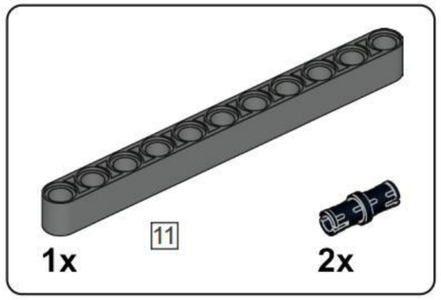


## C125

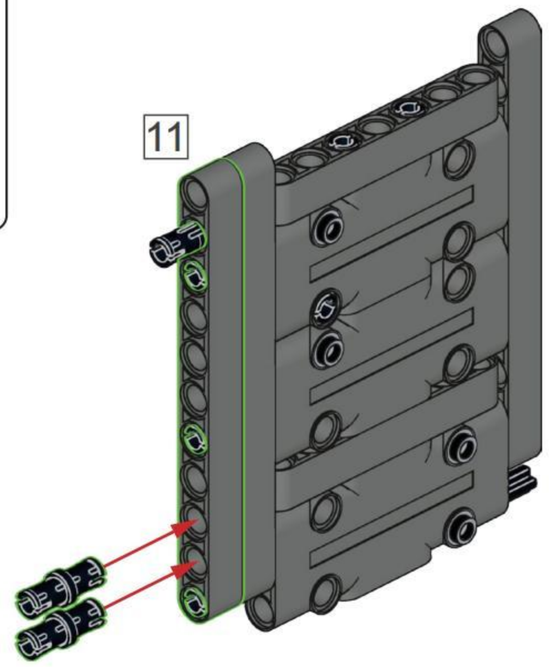


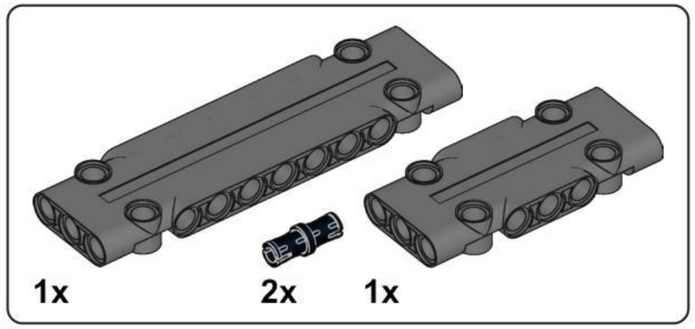


## C126

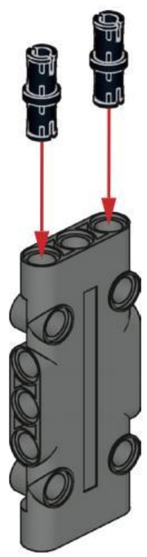

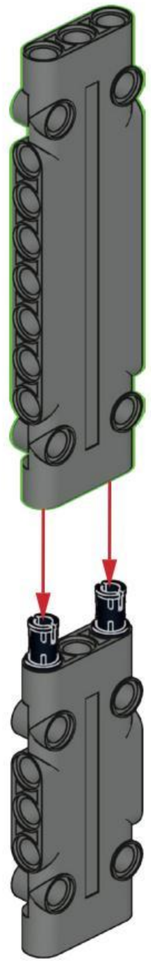

## C127

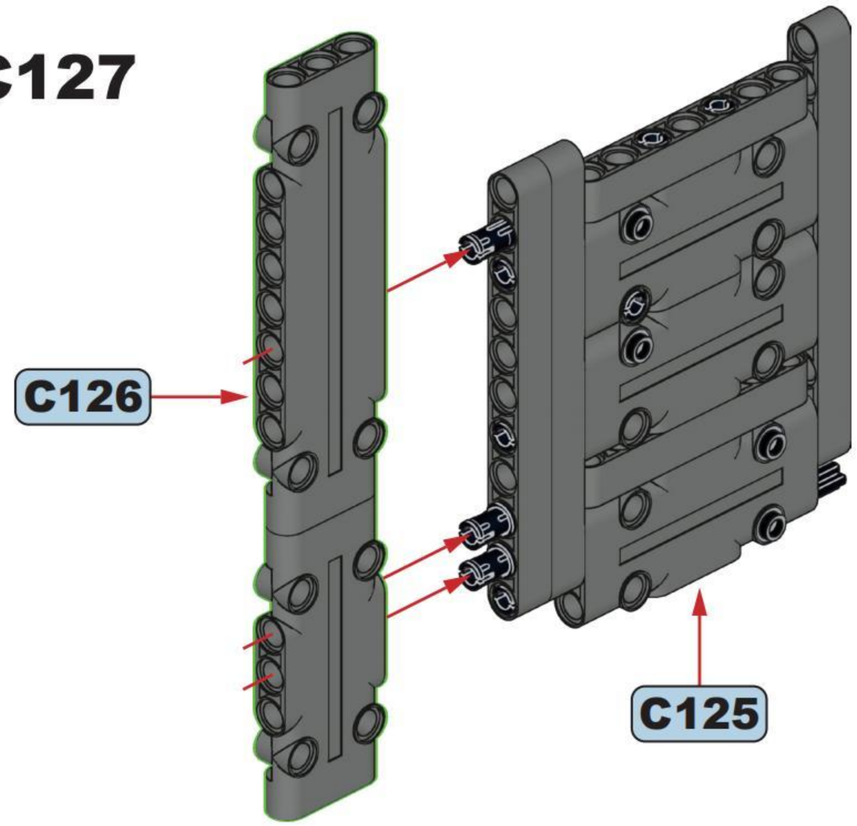


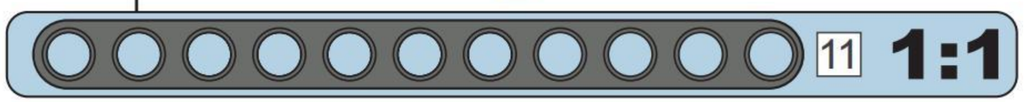

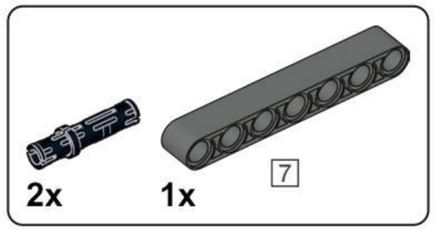


## C128

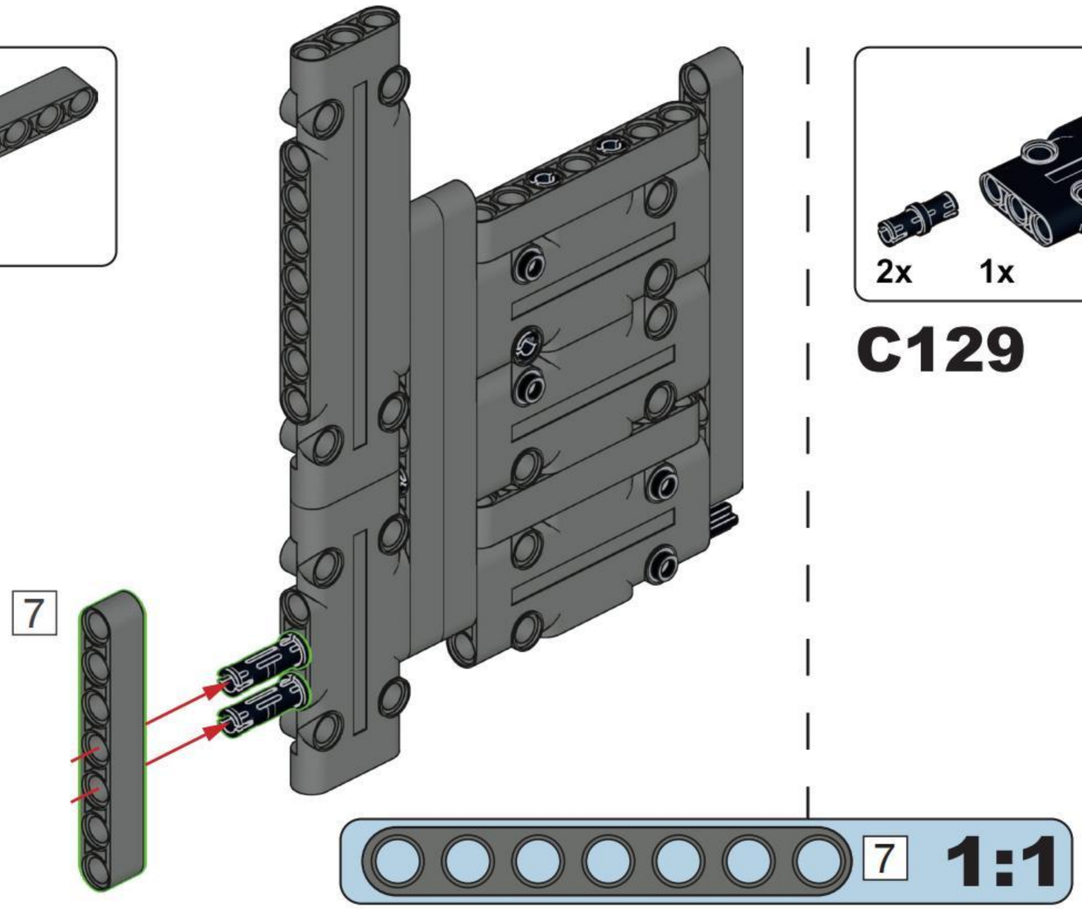


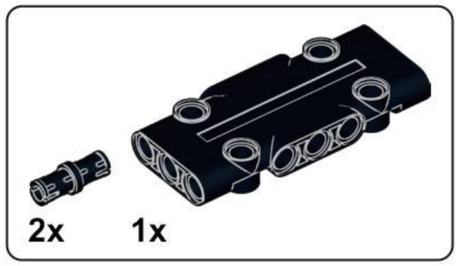


## C129

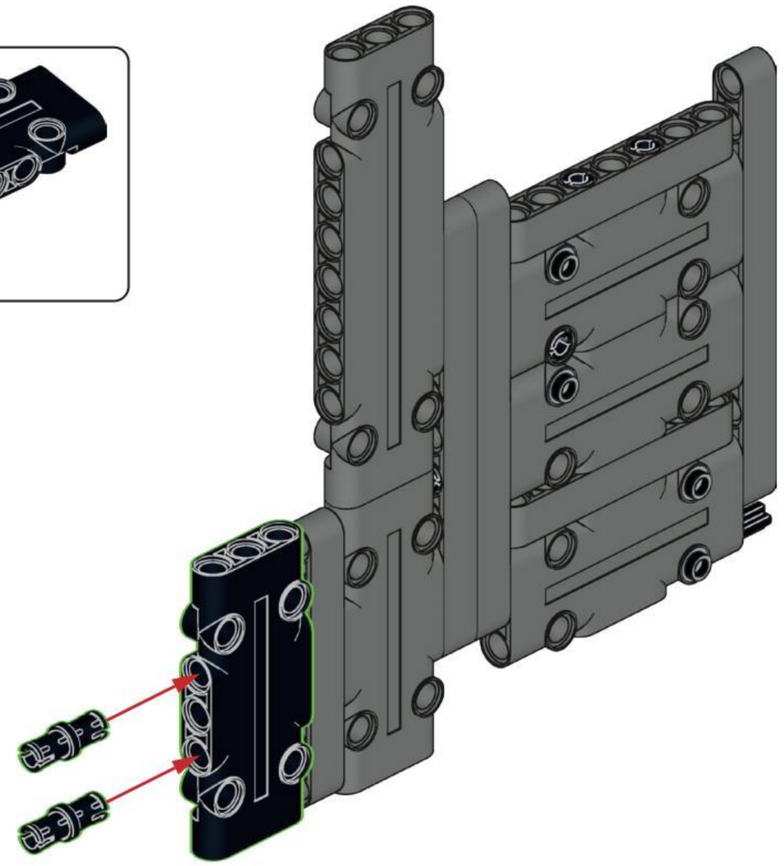

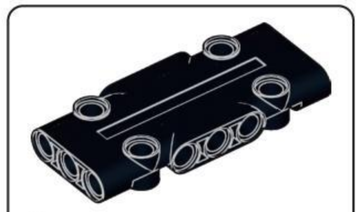


## C130

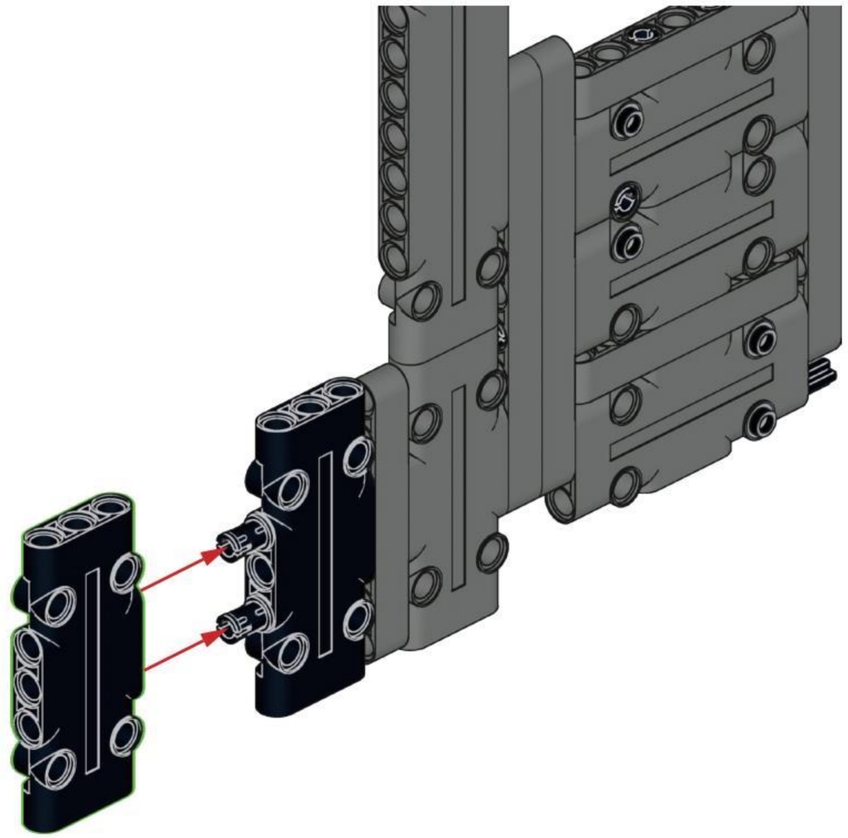

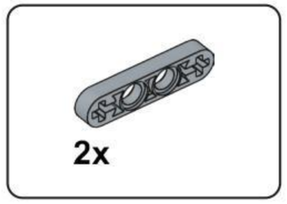


C131

C130

C117

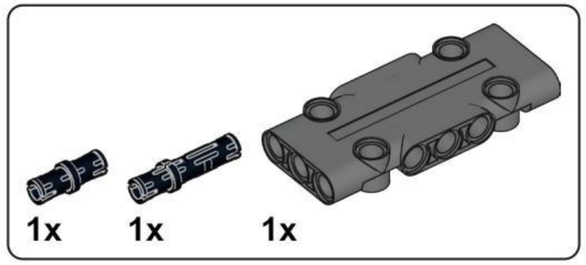


## C132

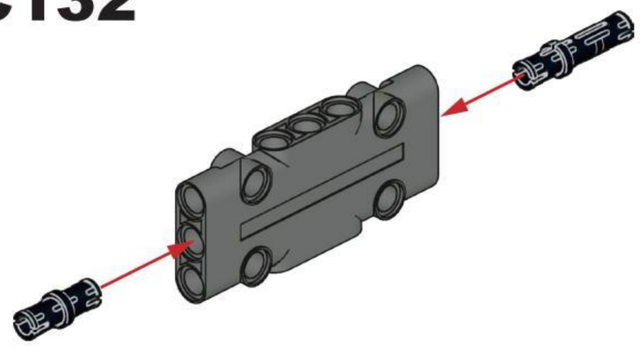

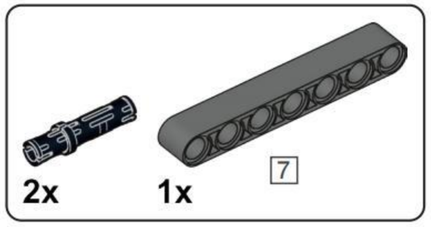


## C133

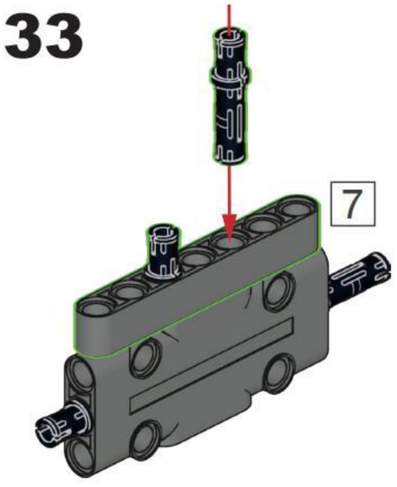


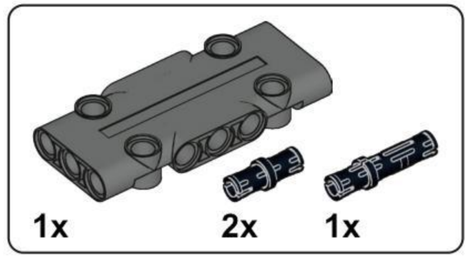


## C134

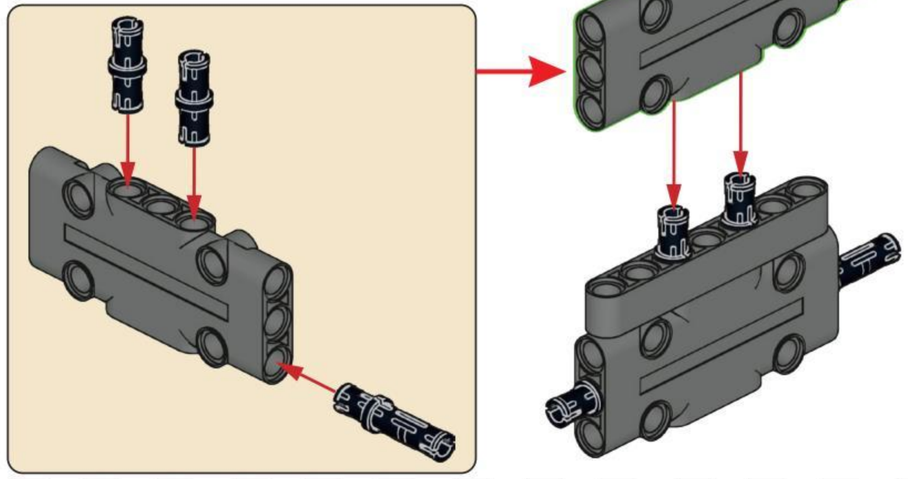

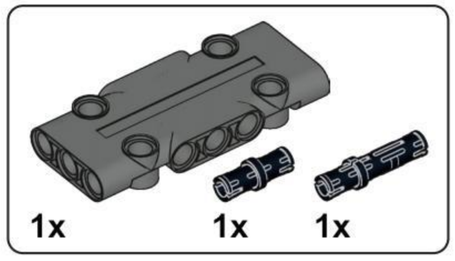


## C135

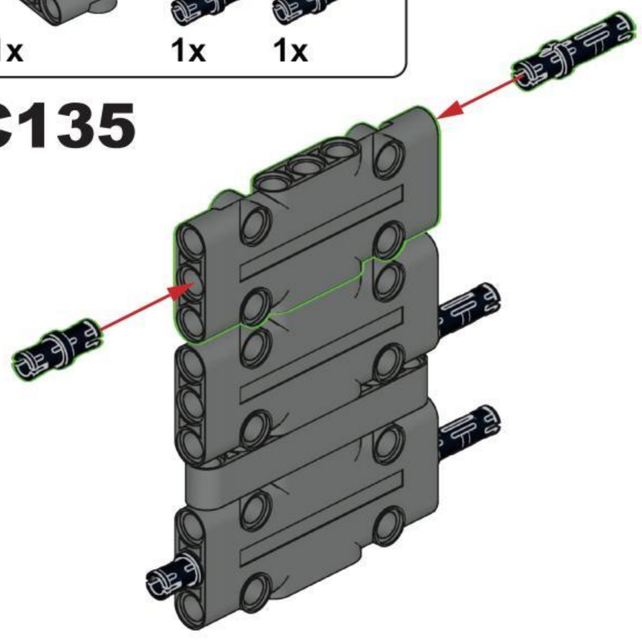

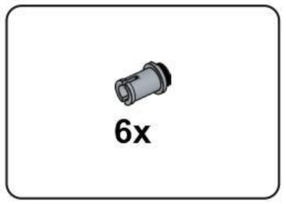


## C136

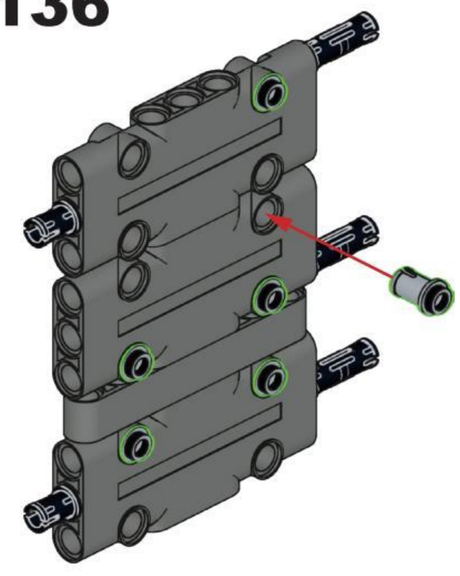

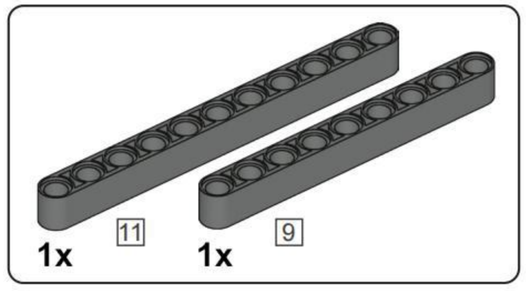


## C137

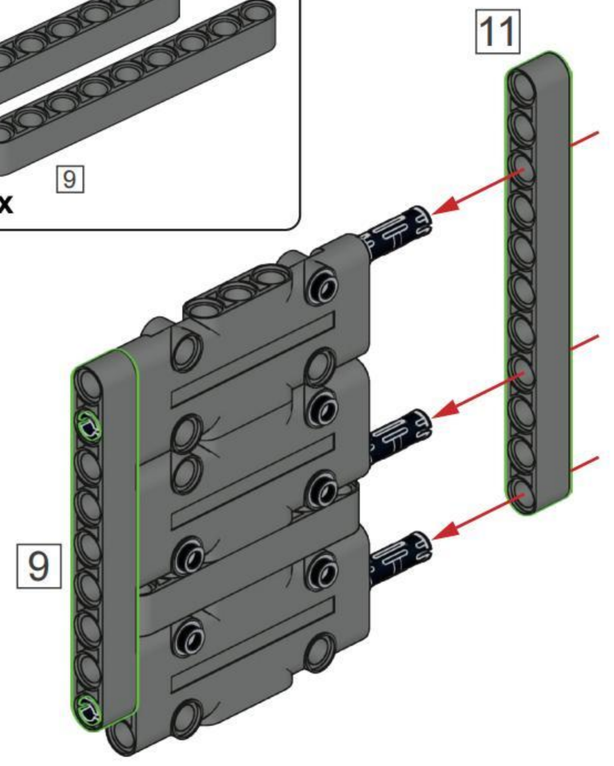


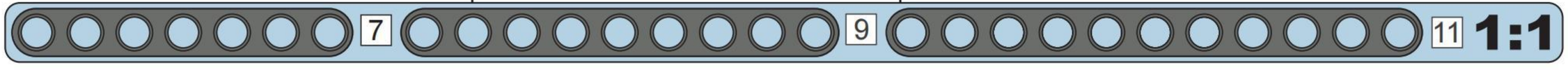

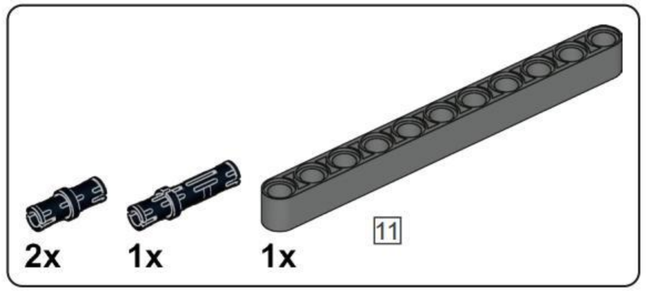


## C138

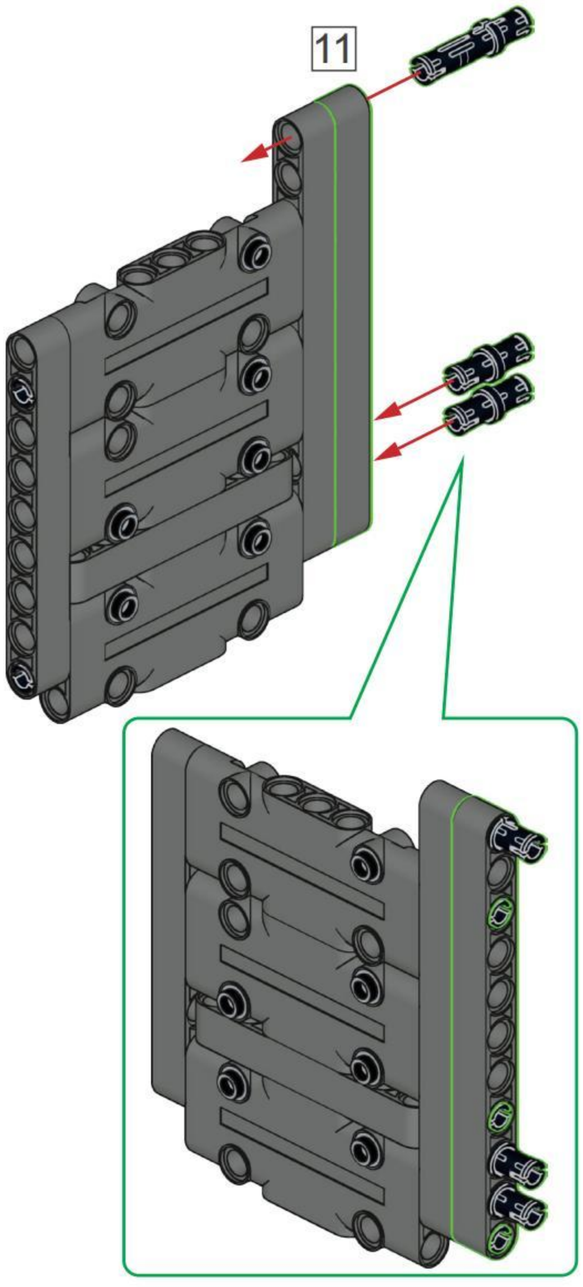


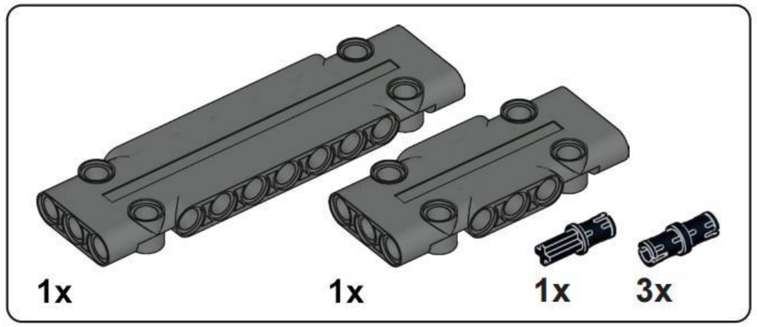


## C139

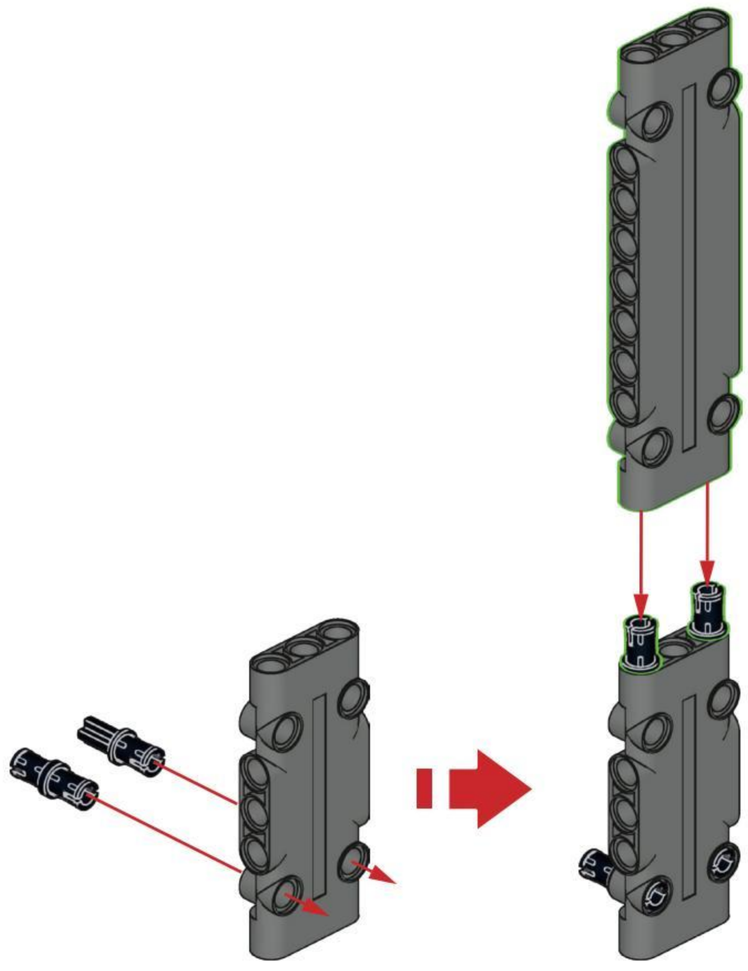

## C140

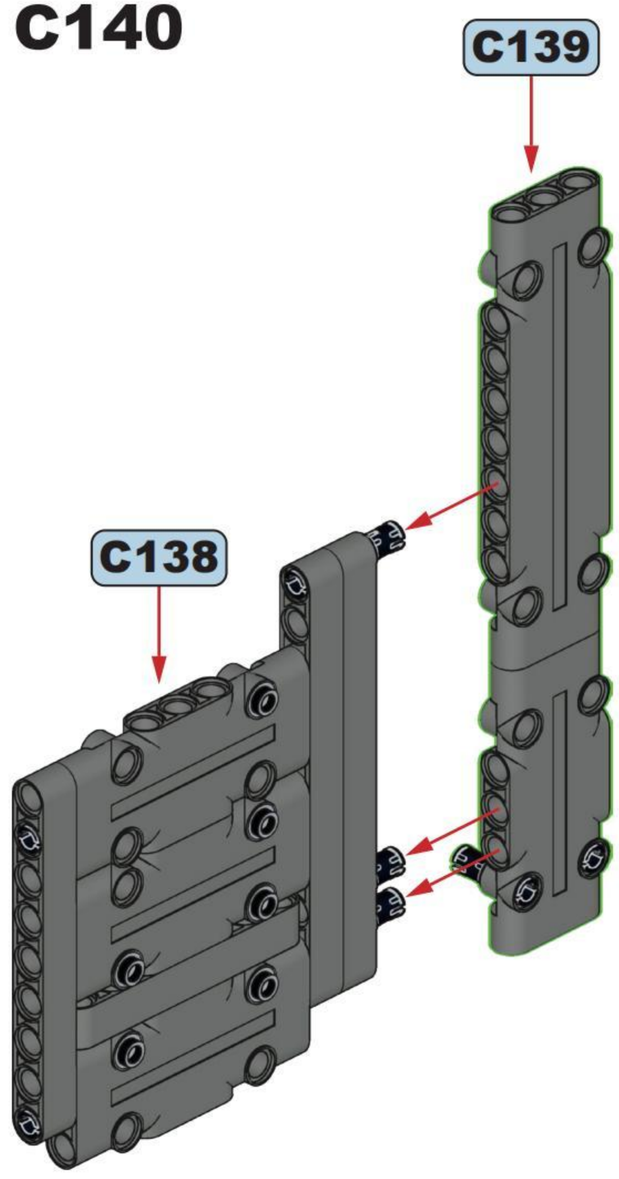


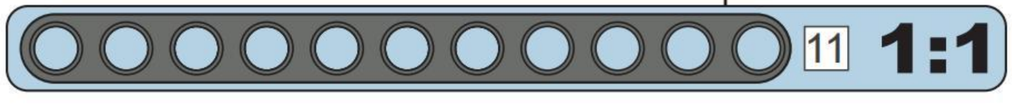

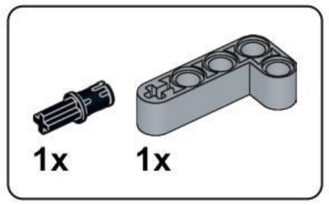


## C141

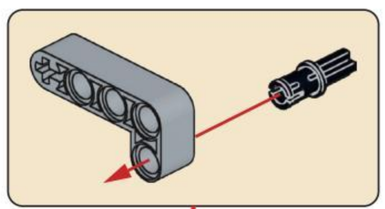

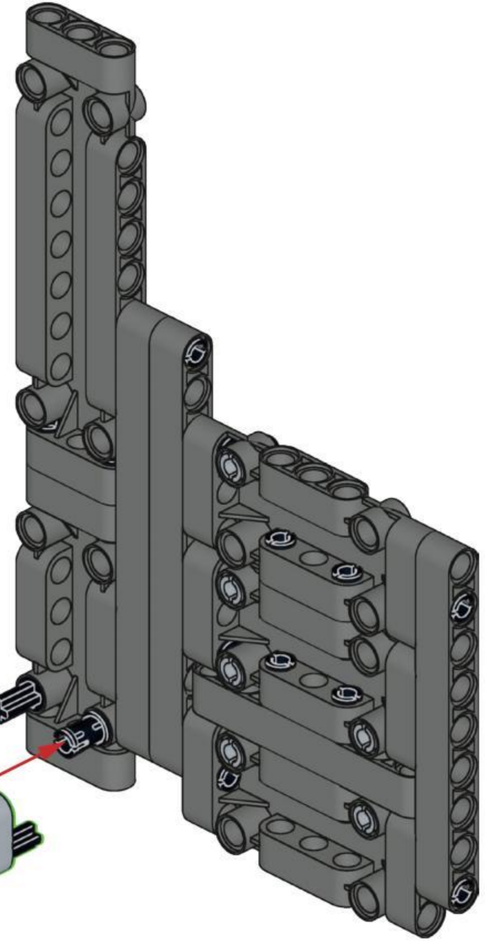

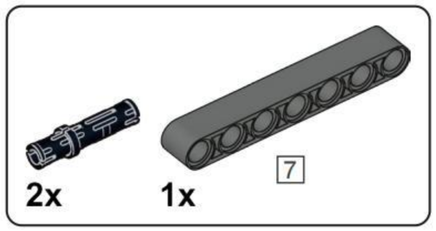


## C142

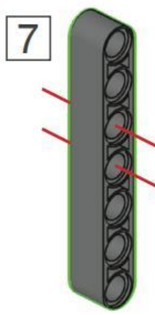


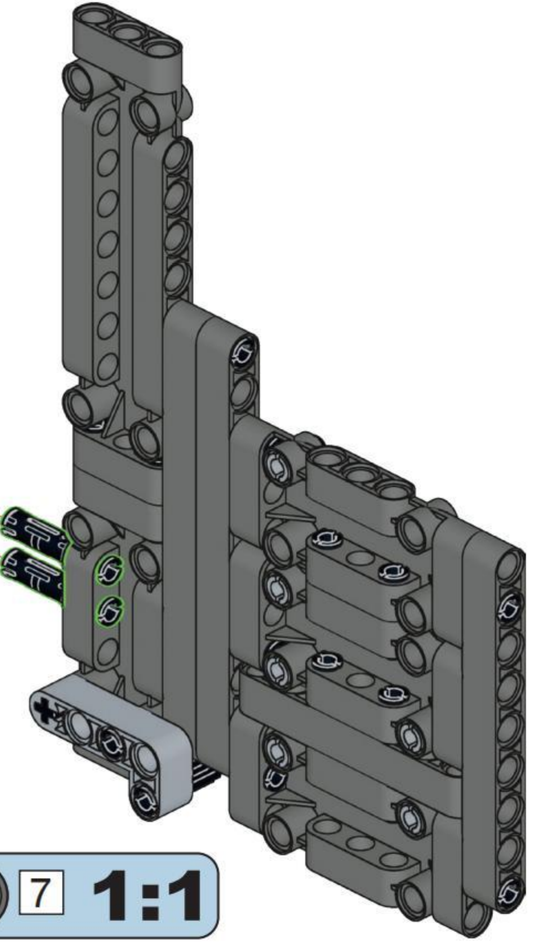

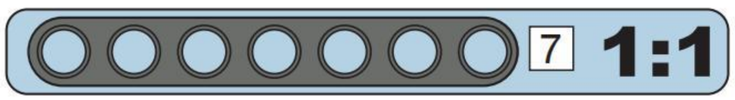


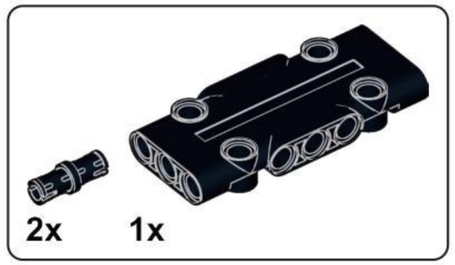


## C143

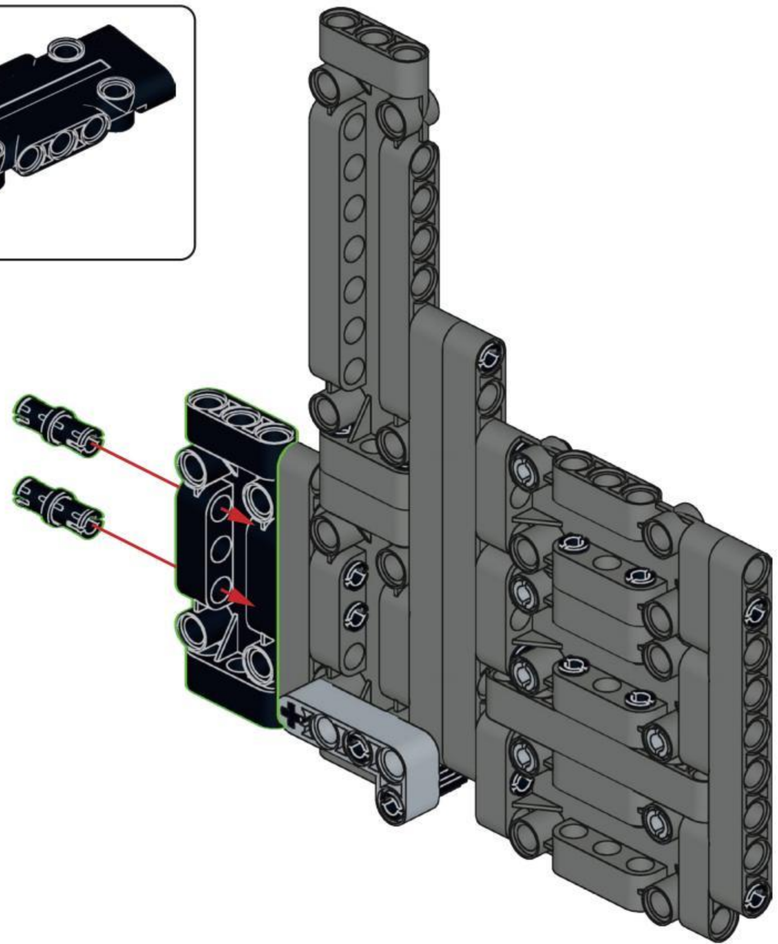

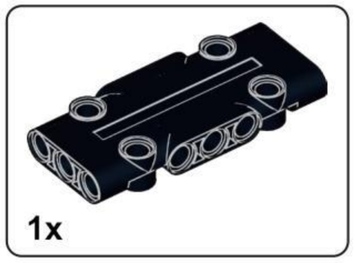


## C144

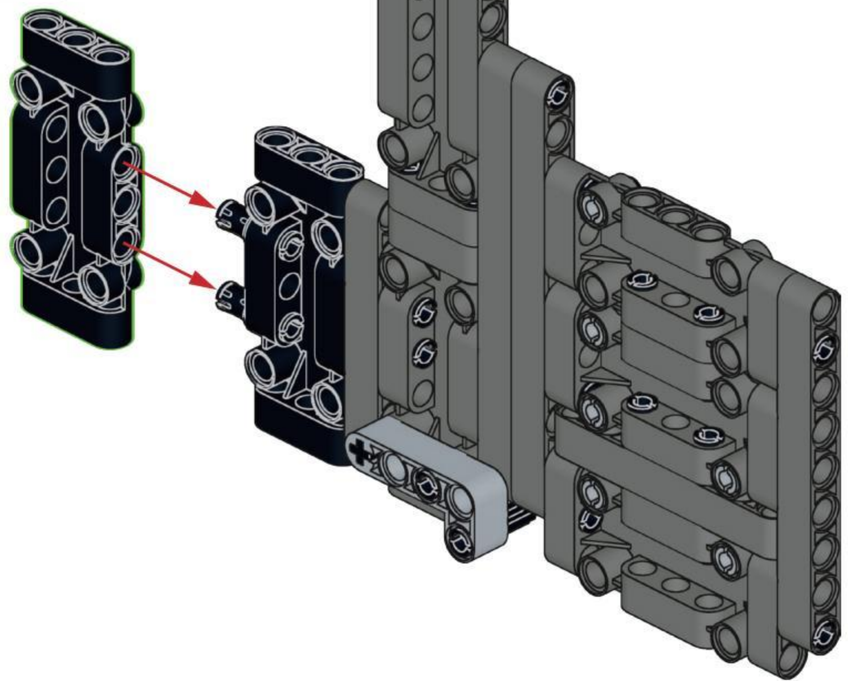

C145

C131

C144

1x 1x

## C146

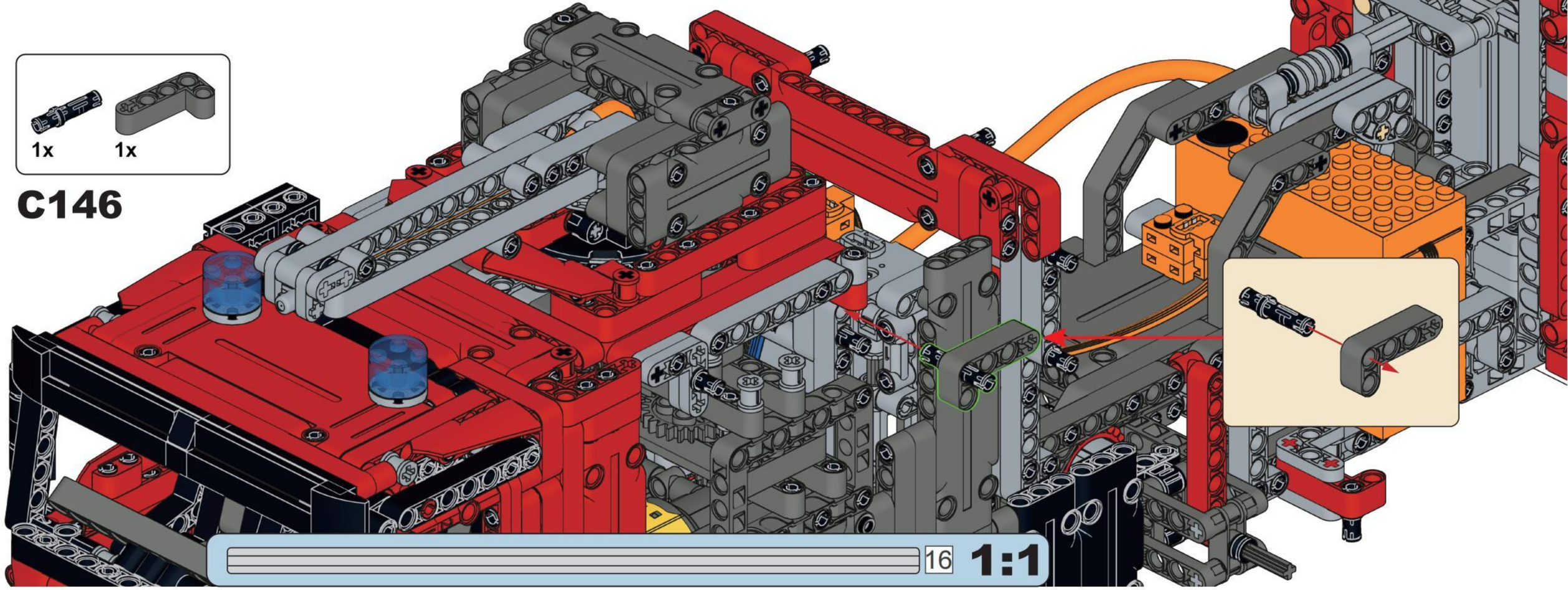

16 1:1

1x 16 1x 1x

## C147

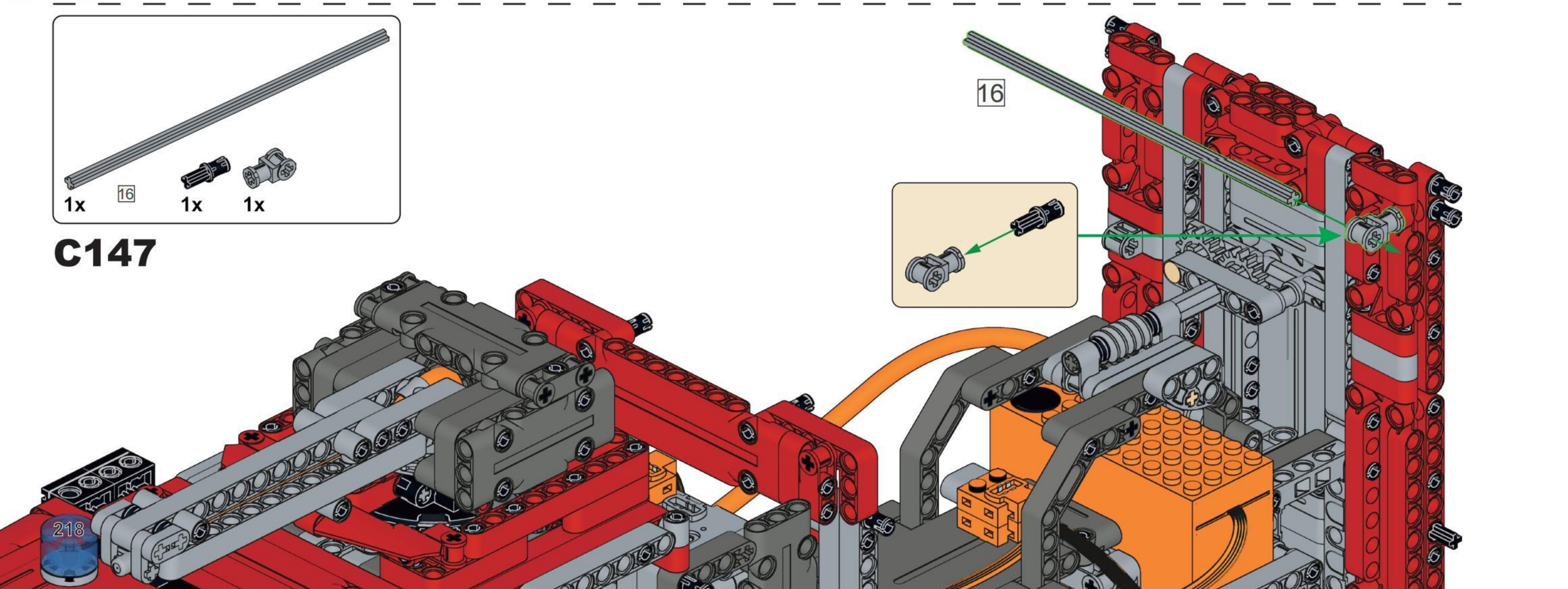

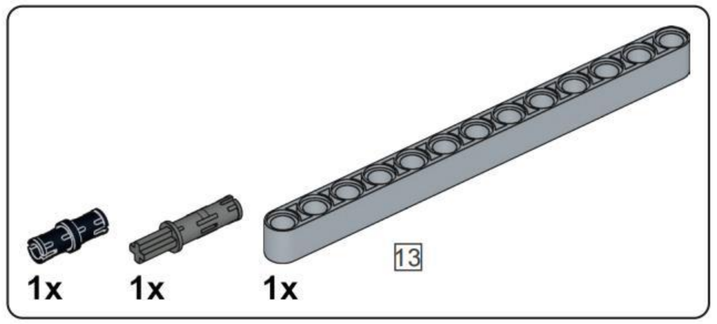


## C148

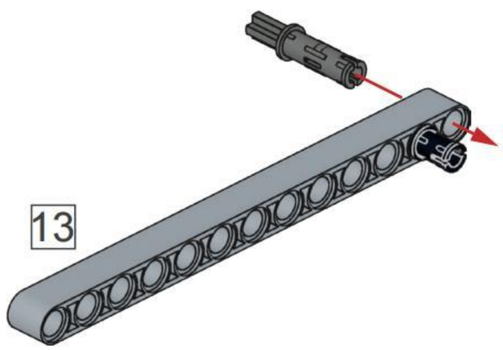


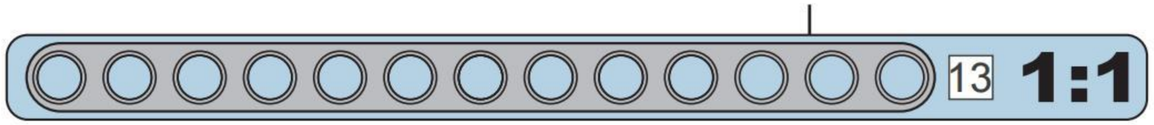


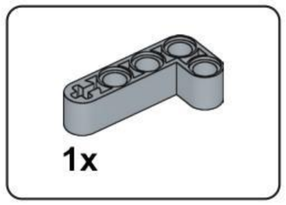


## C149

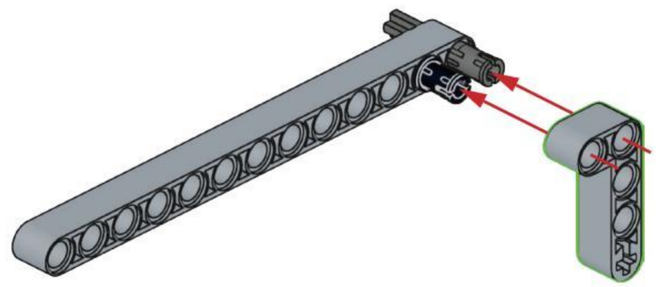

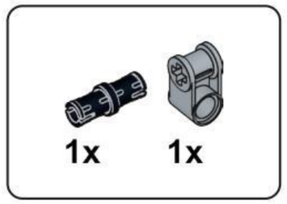


## C150

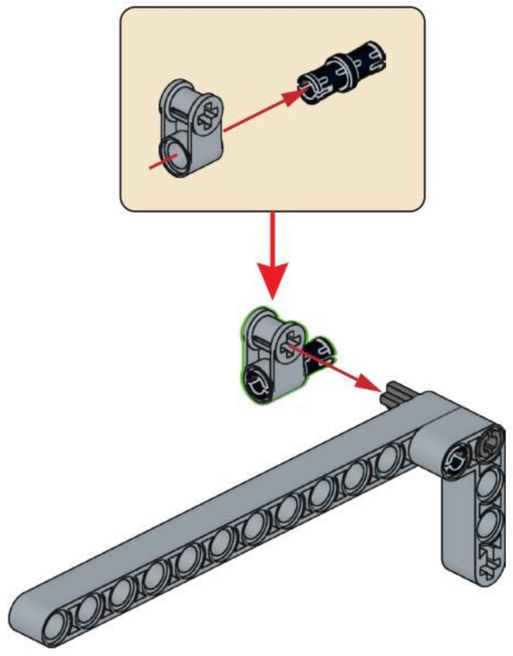

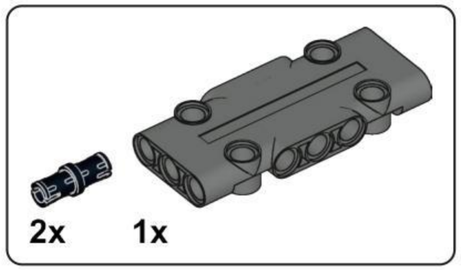


## C151

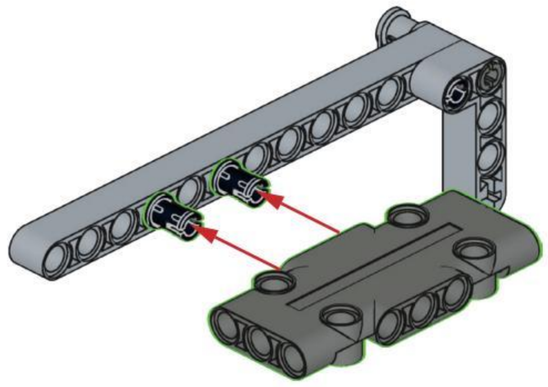

# C152

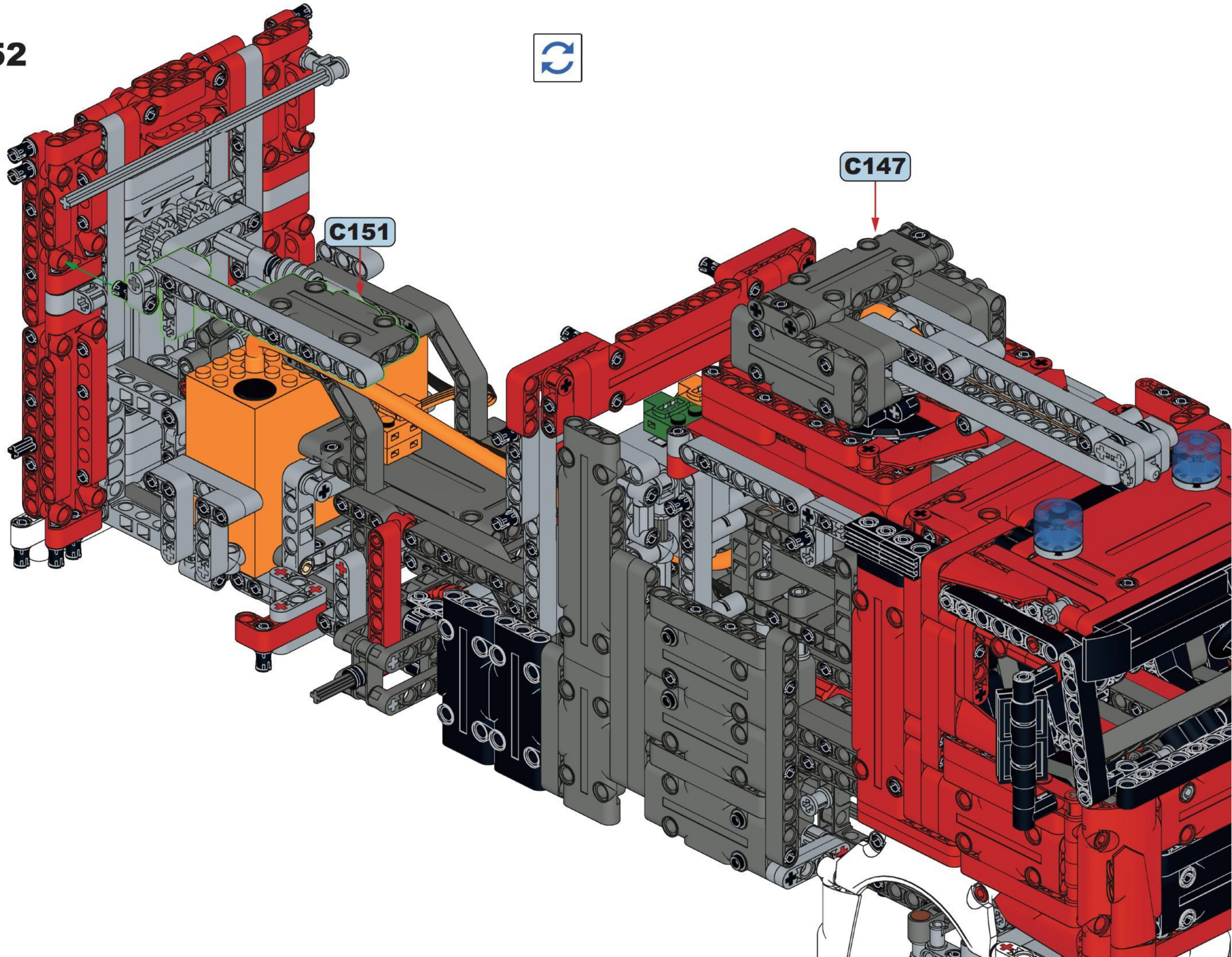

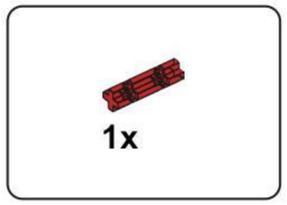


C153

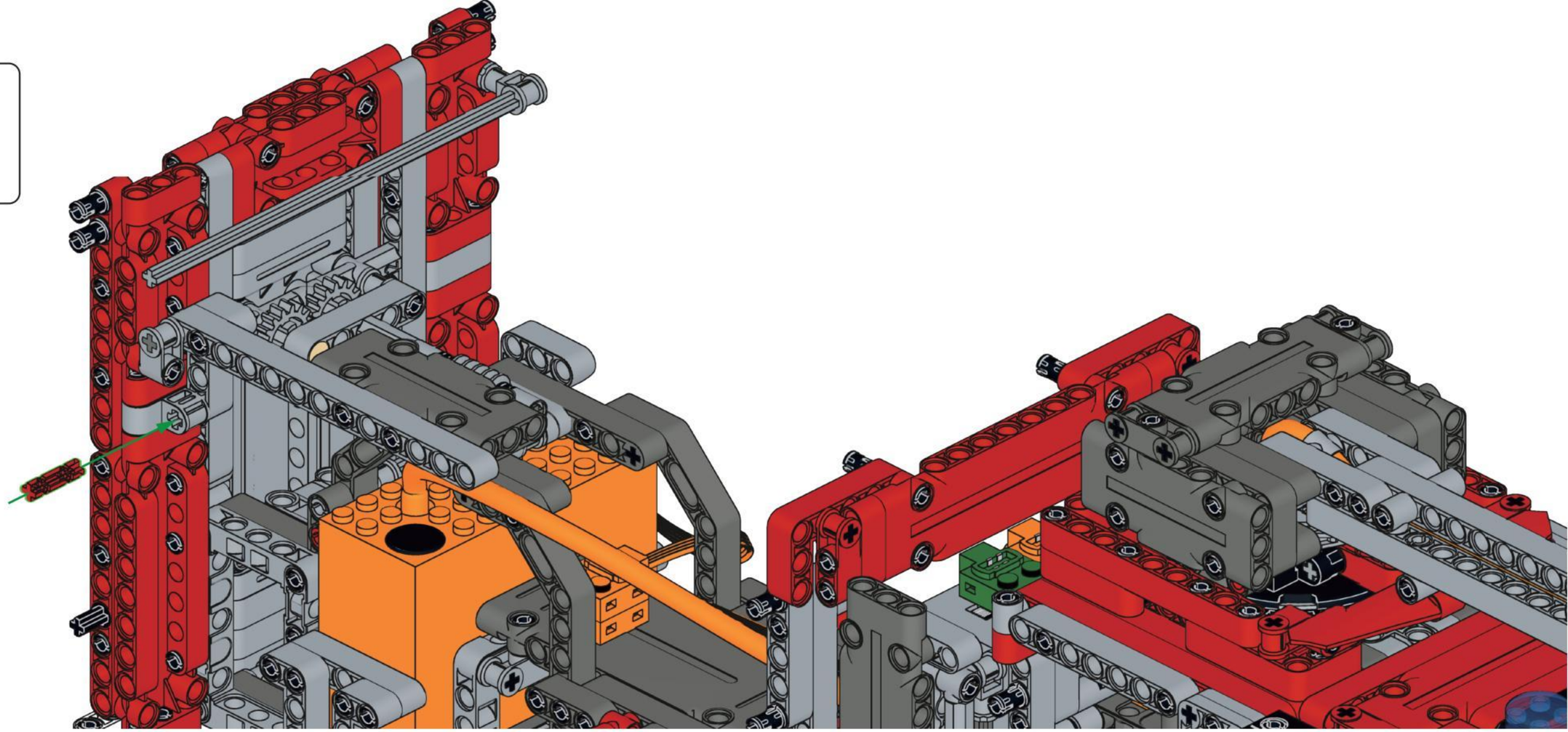

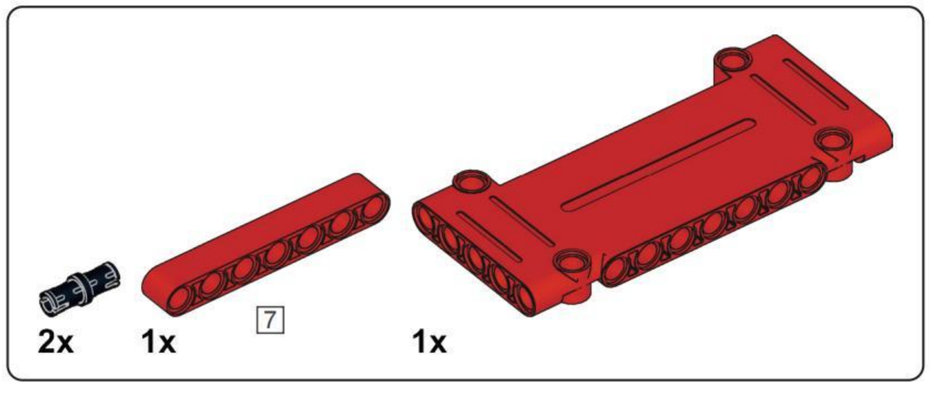


C154

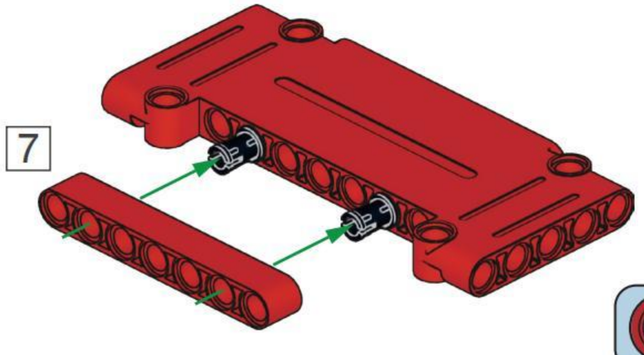


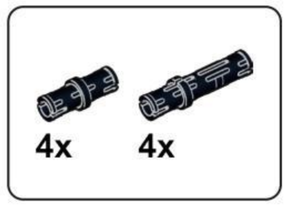


C155

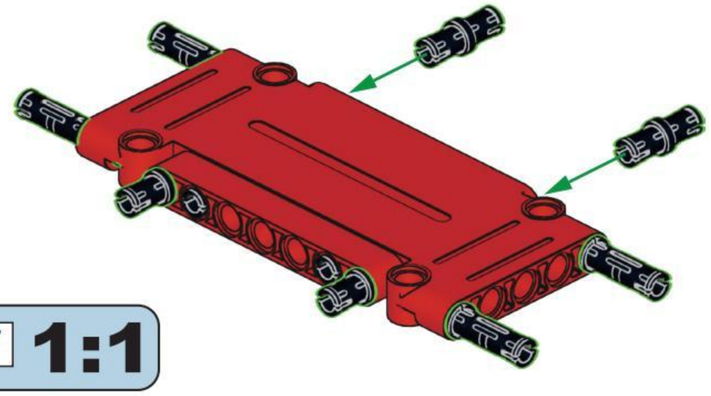

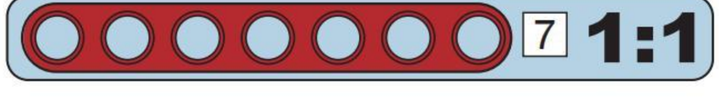

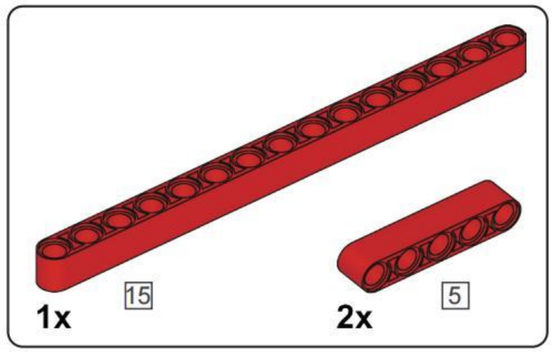


## C156

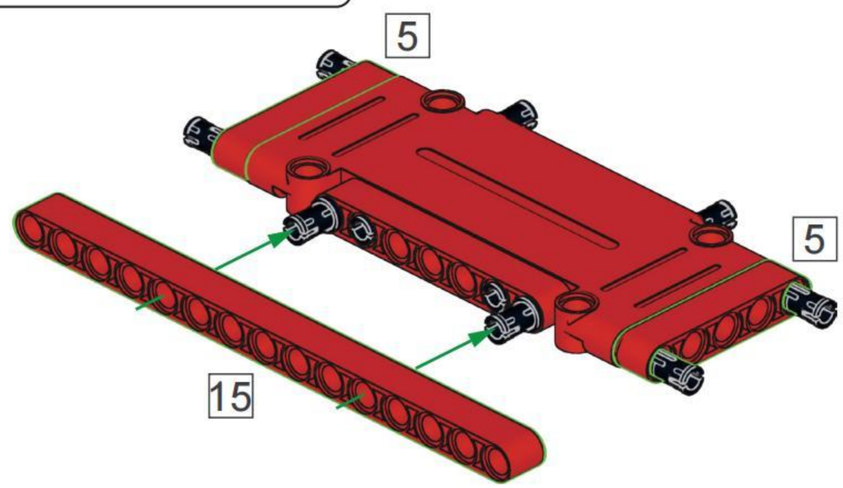


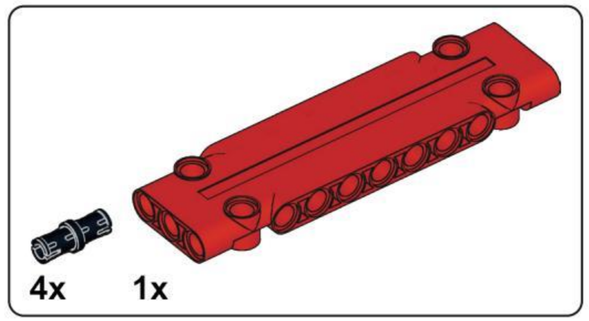


## C157

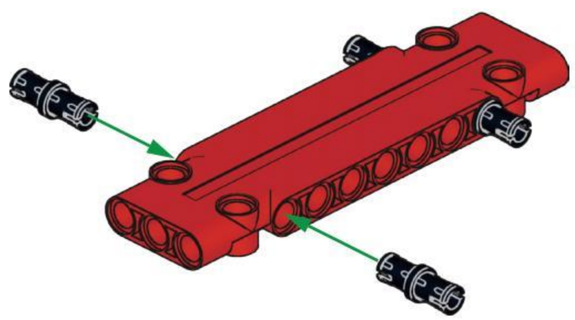

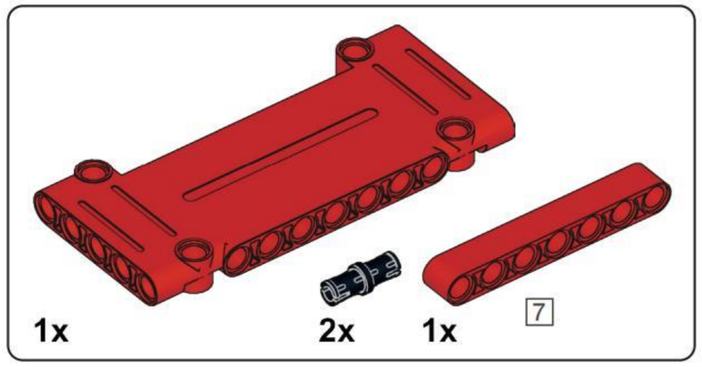


## C158

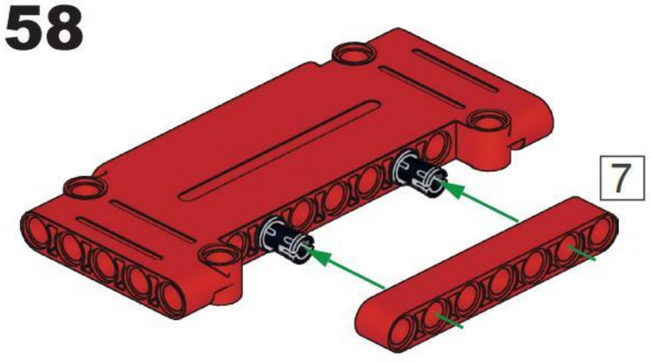


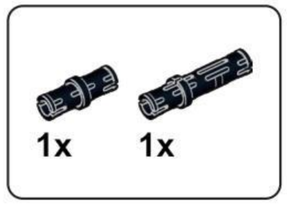


## C159

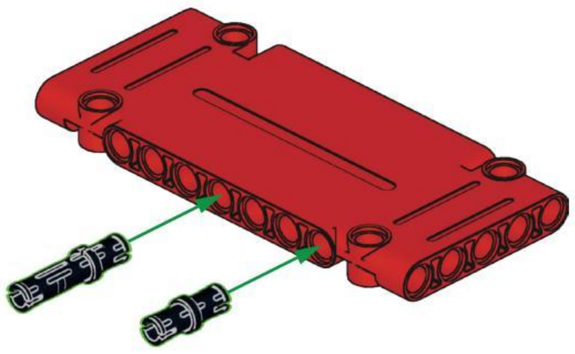

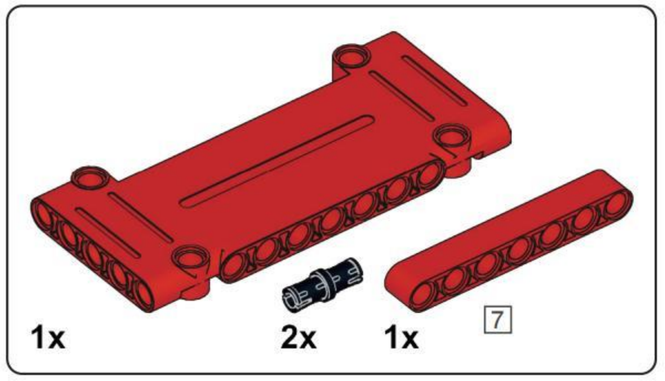


## C160

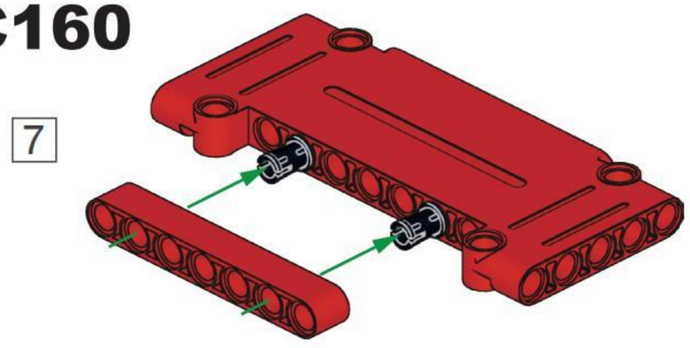


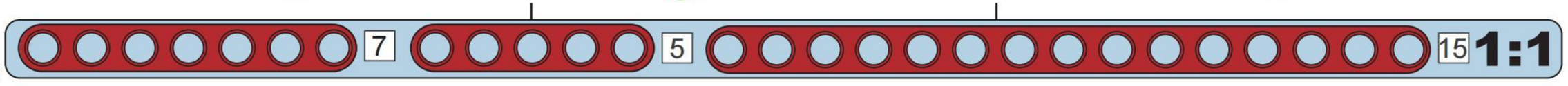

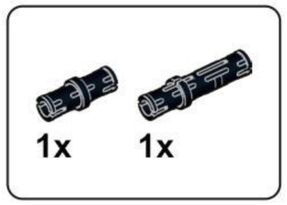


## C161

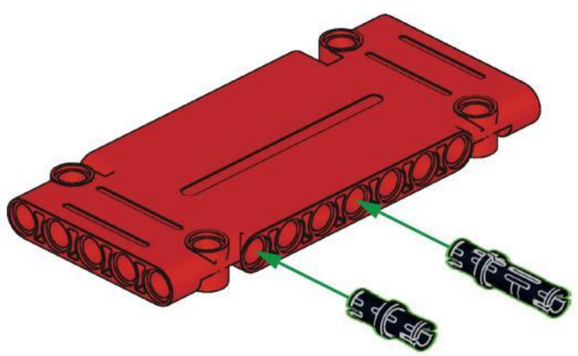

## C162

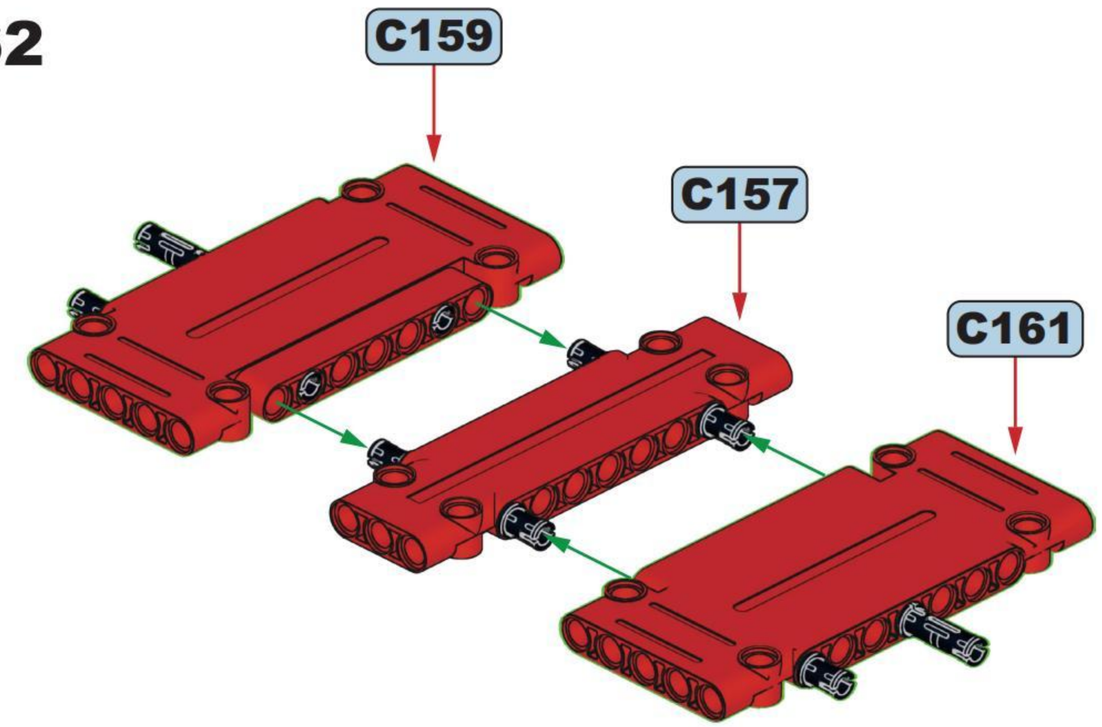


## C163

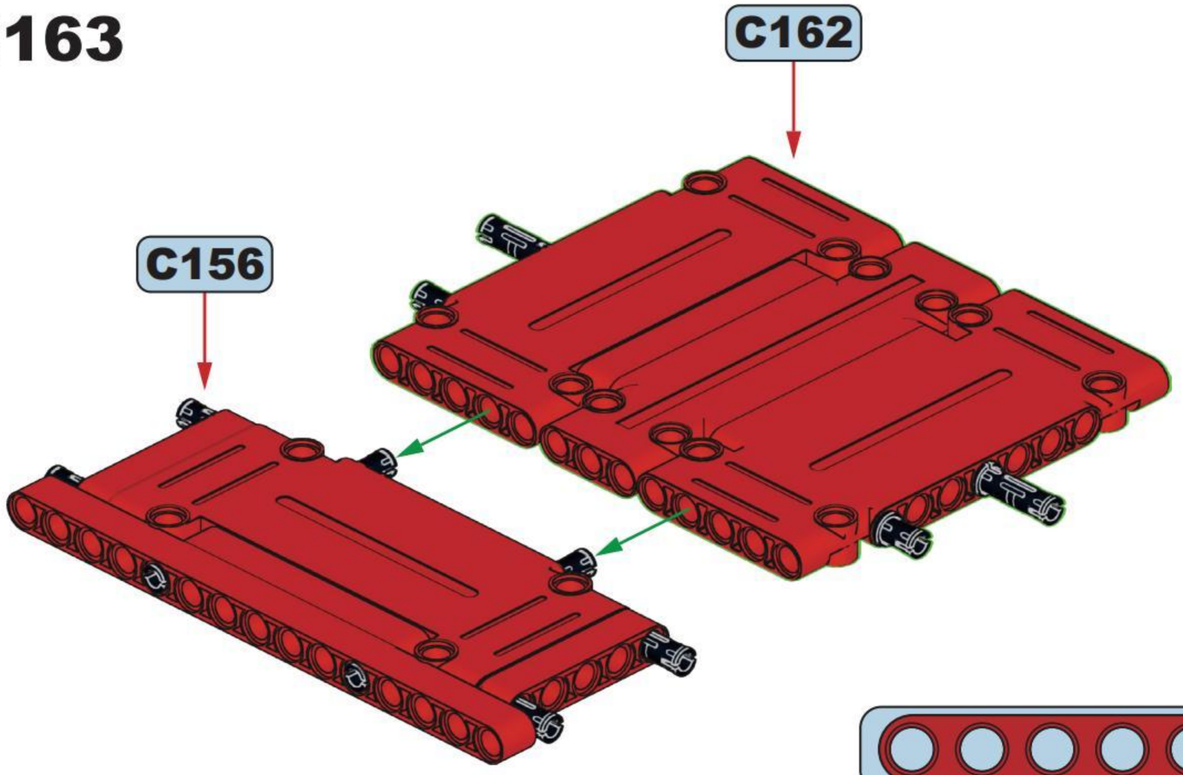


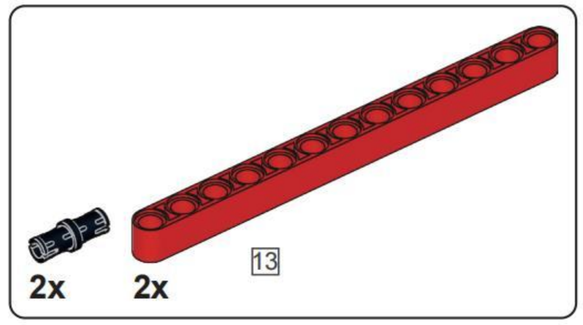


## C164

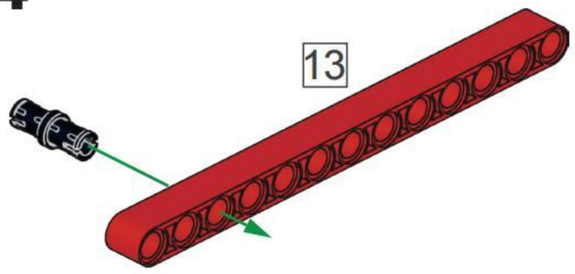


x2

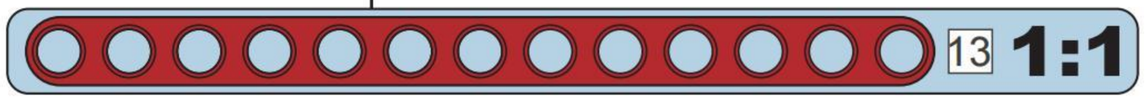

## C165

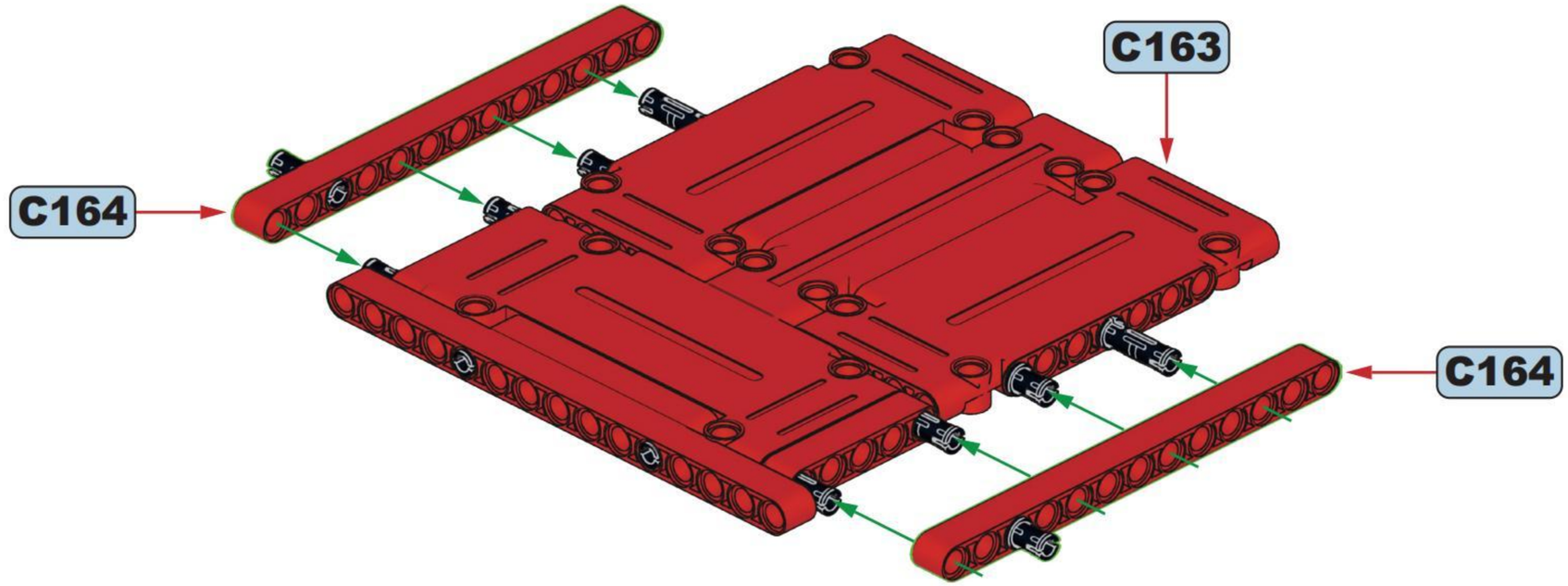


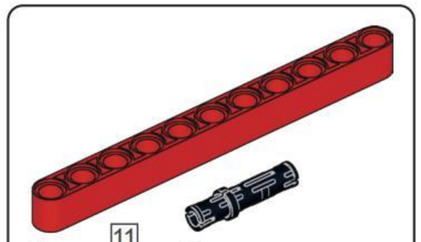

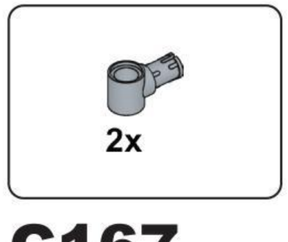


## C166

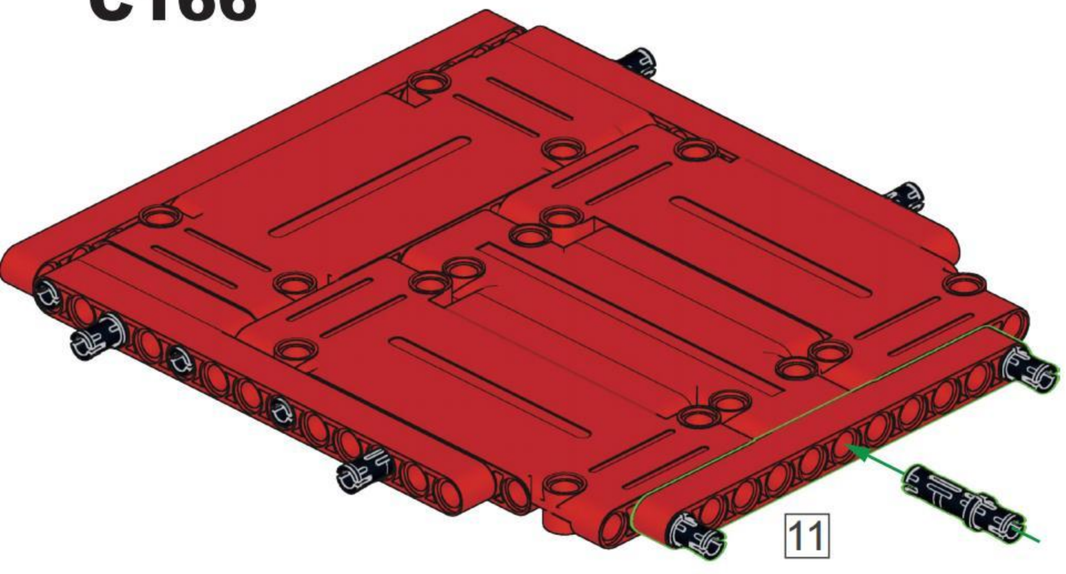


## C167

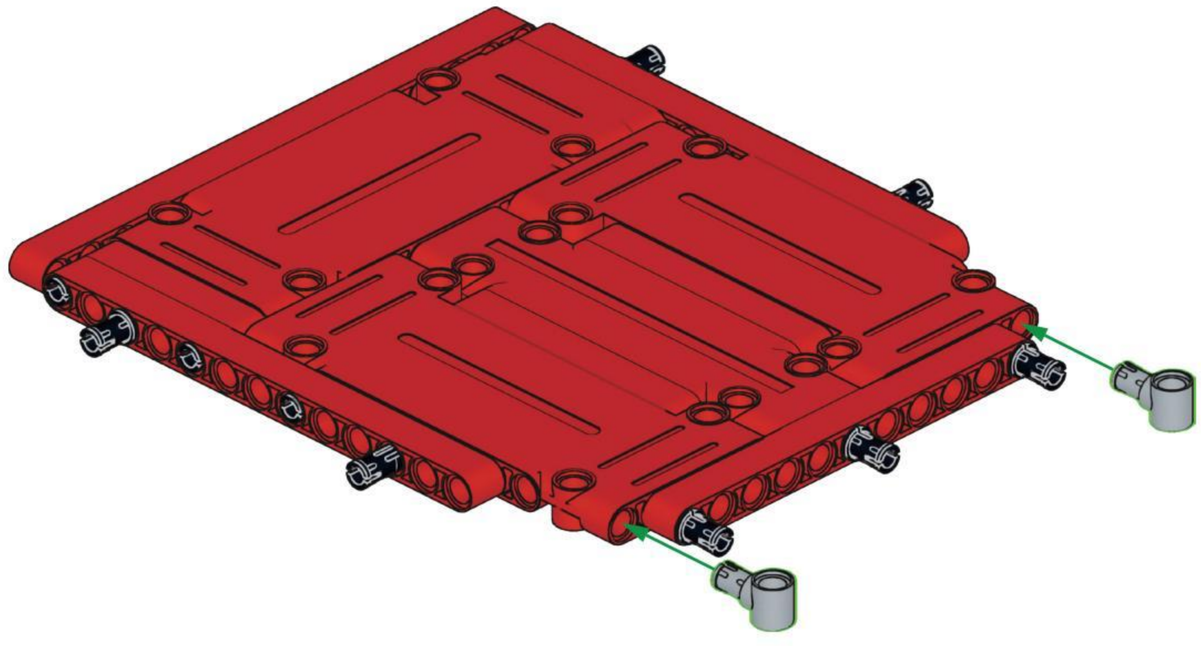

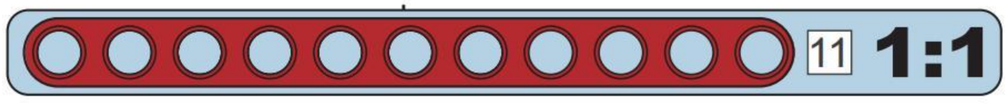

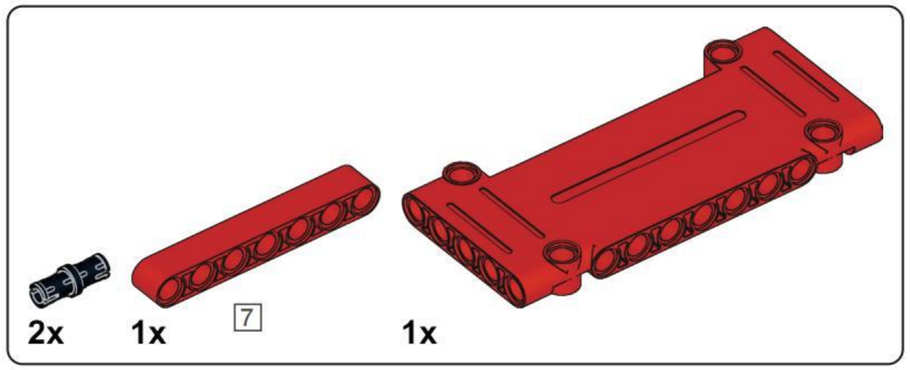


## C168

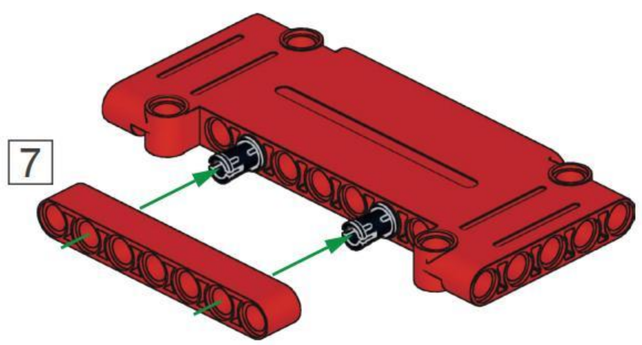


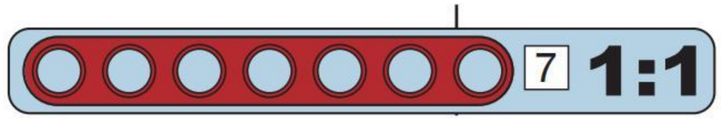


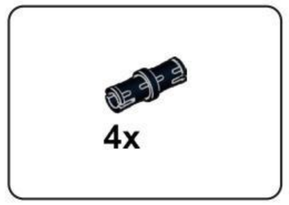


## C169

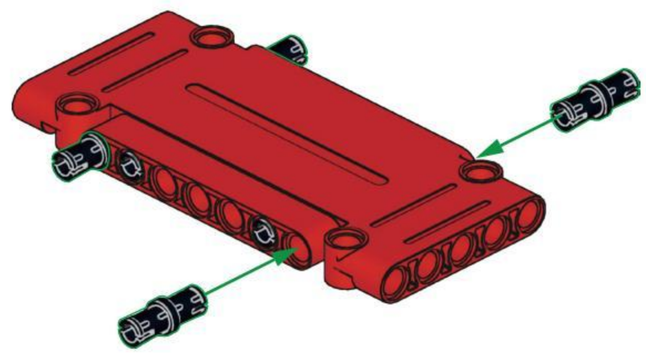

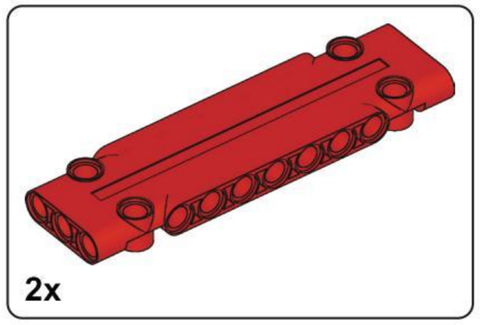


## C170

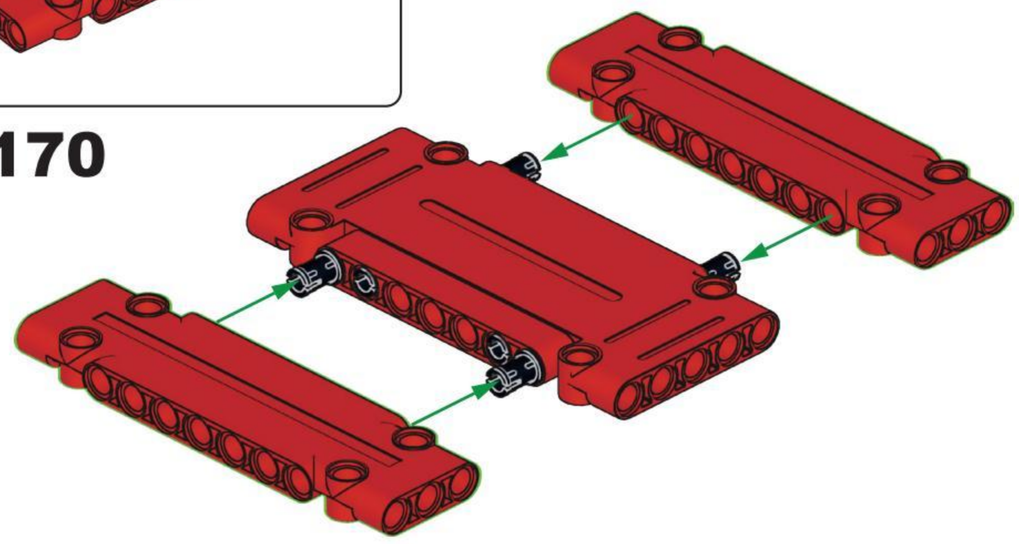

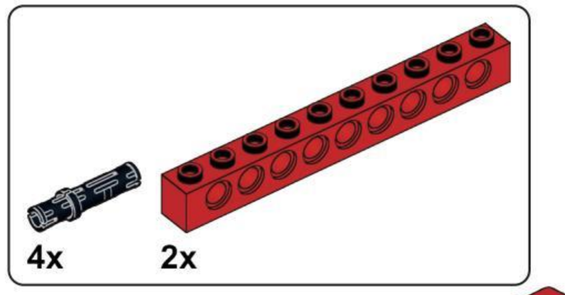


## C171

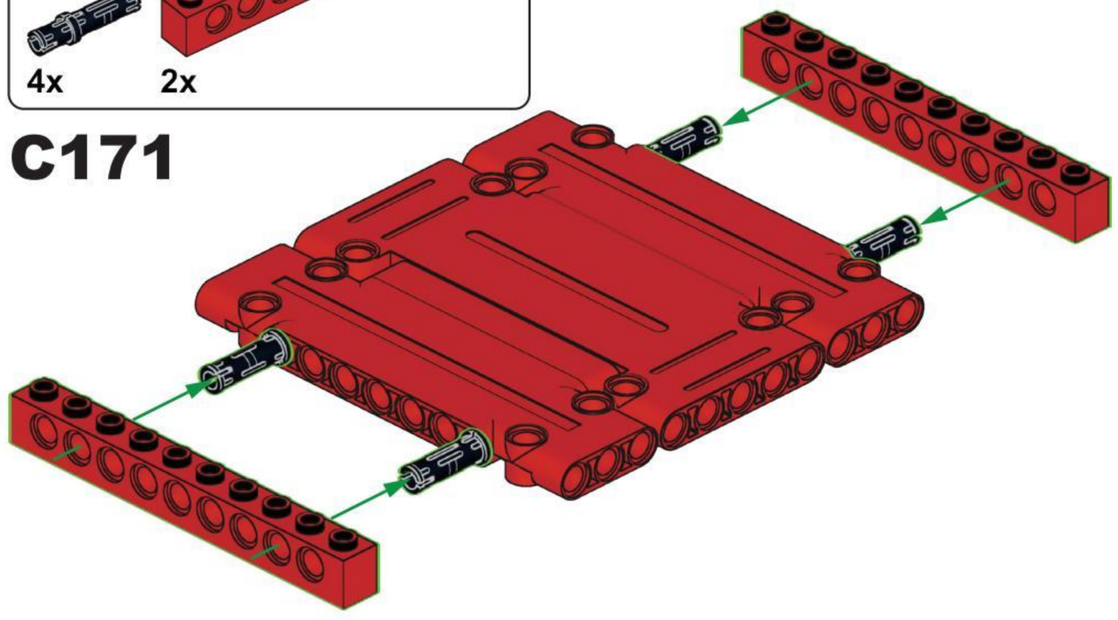

## C172

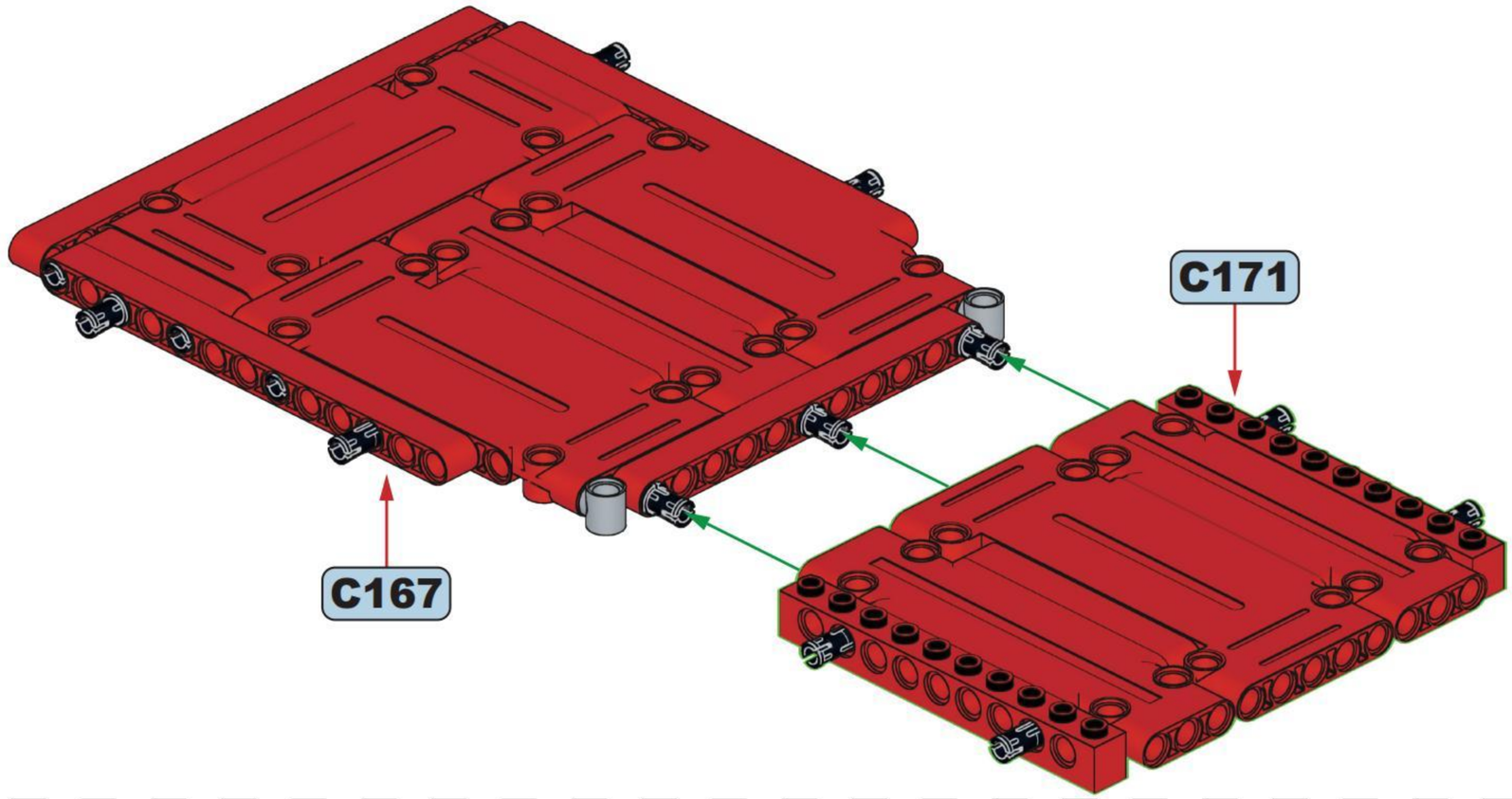


## C173

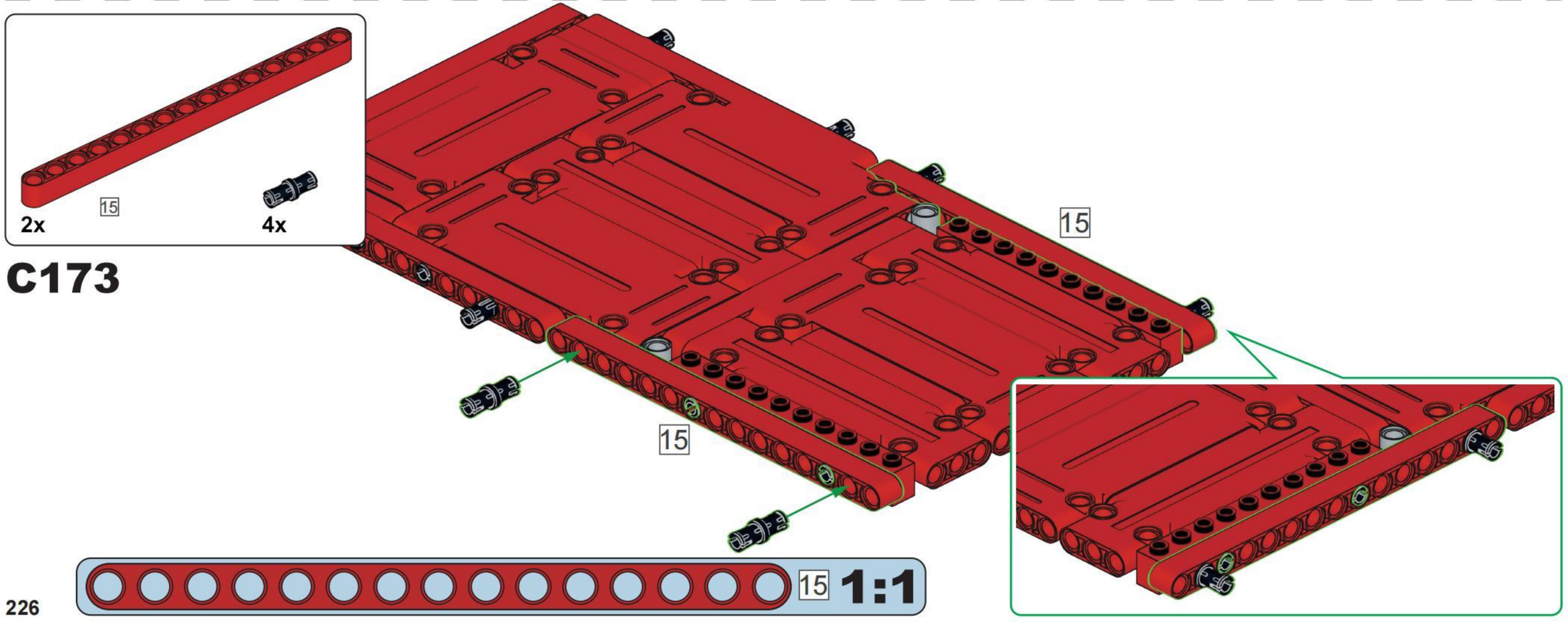

4x 1x 7

# C174

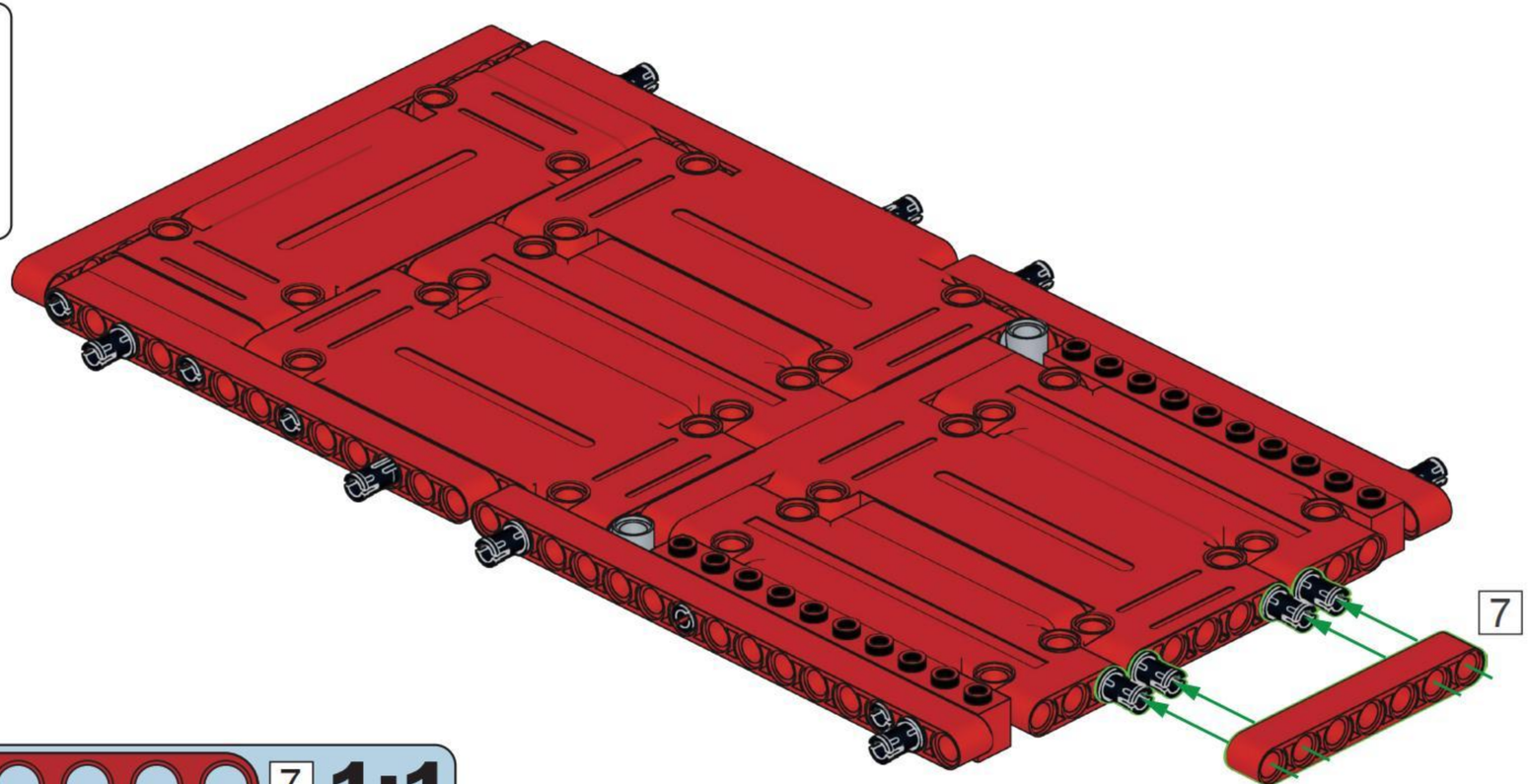


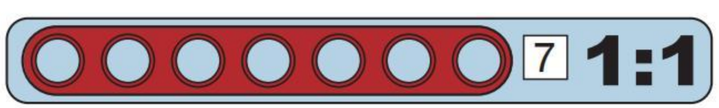


9x

# C175

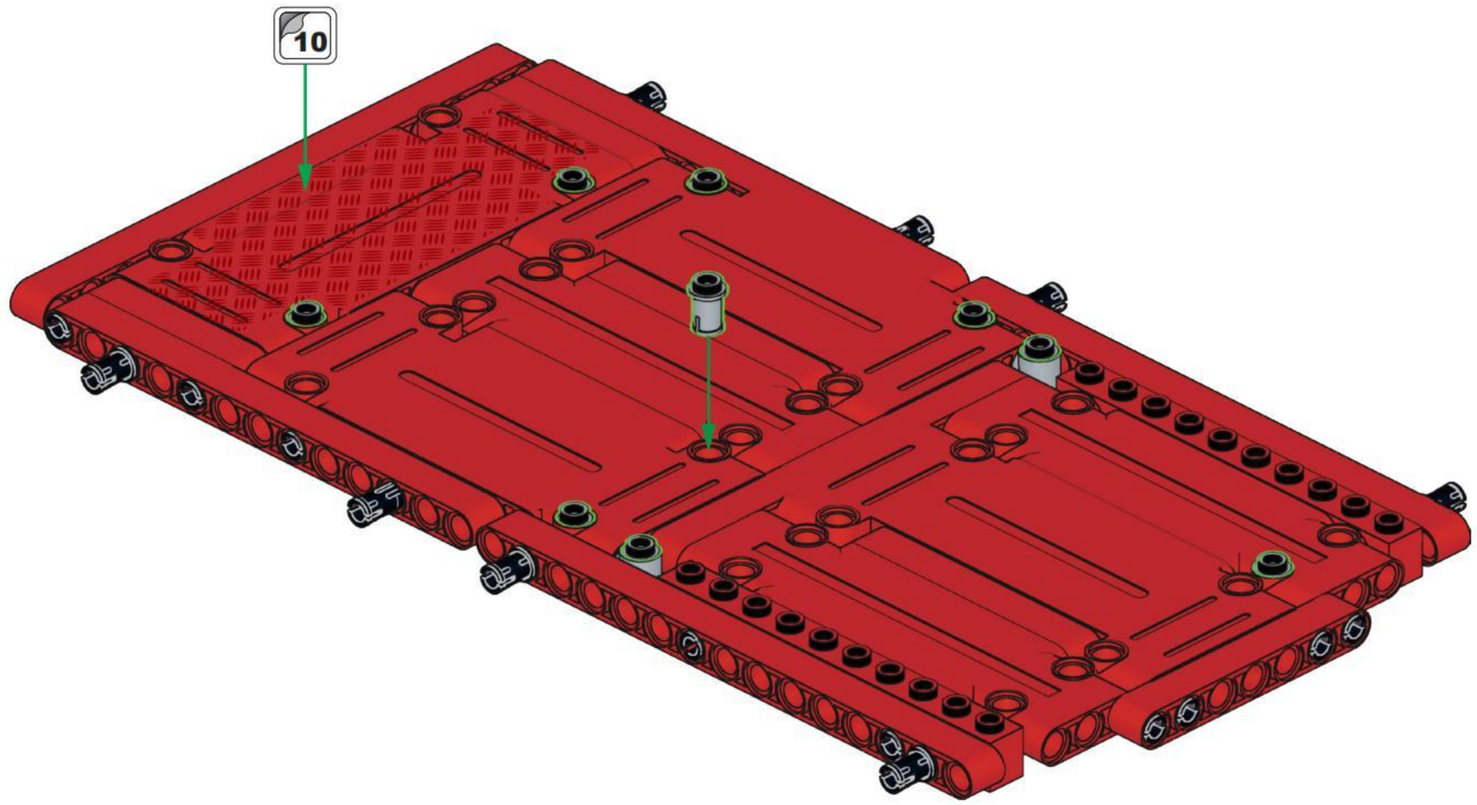

# C176

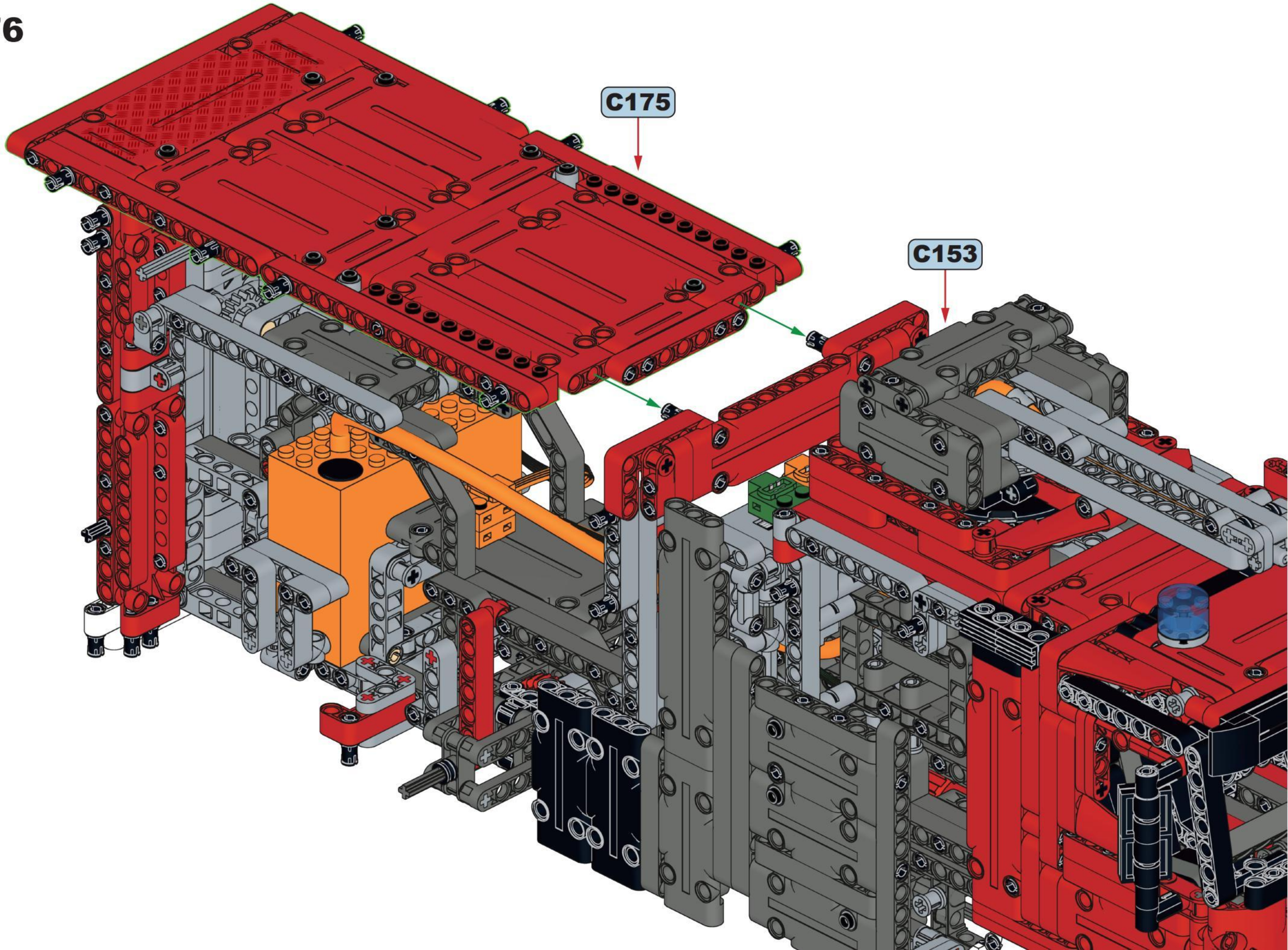

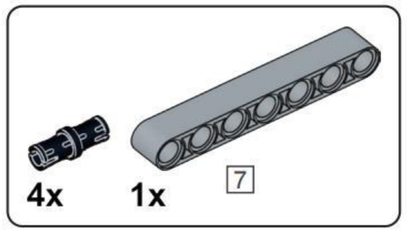


## C177

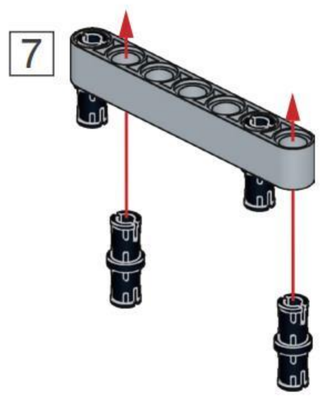


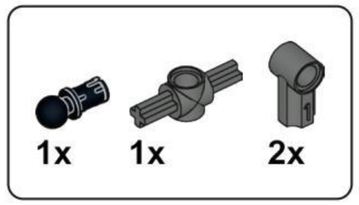


## C178

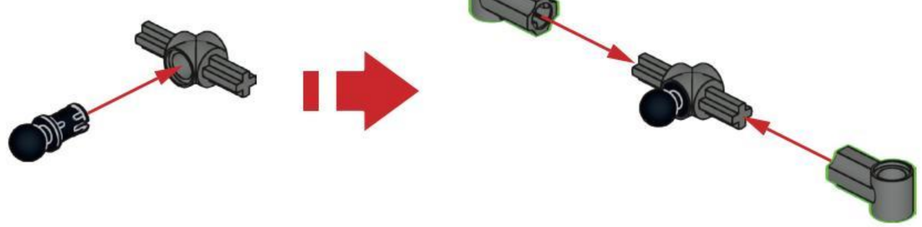

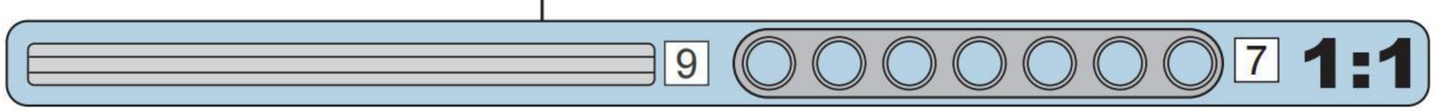


## C179

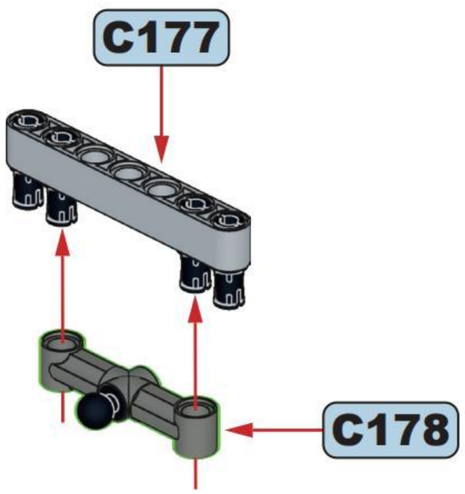


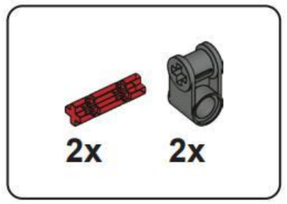


## C180

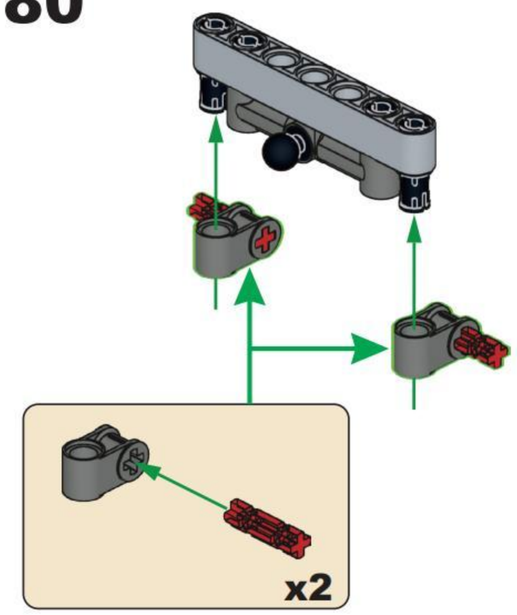


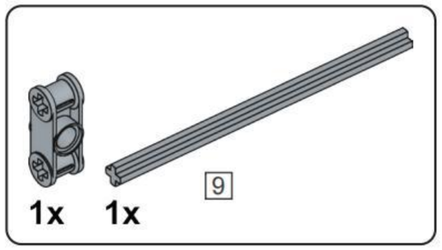


## C181

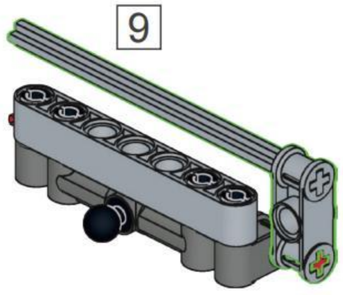


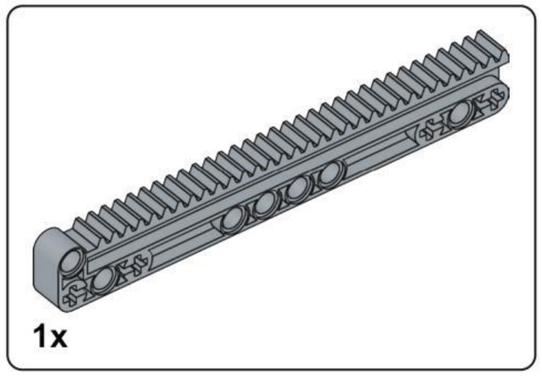


## C182

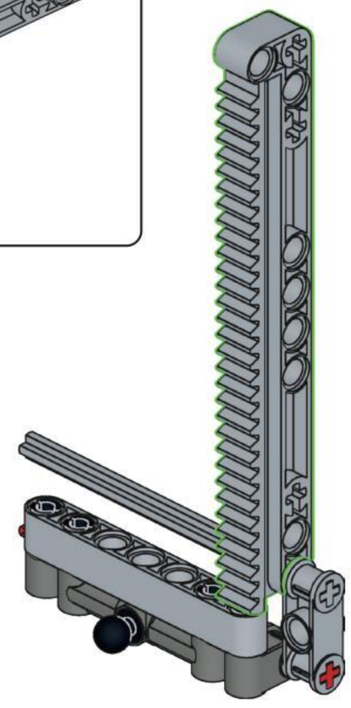

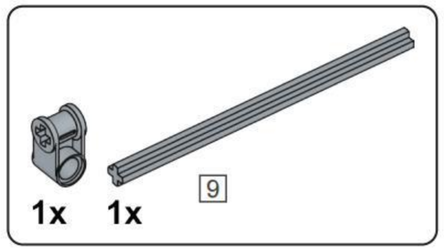


## C183

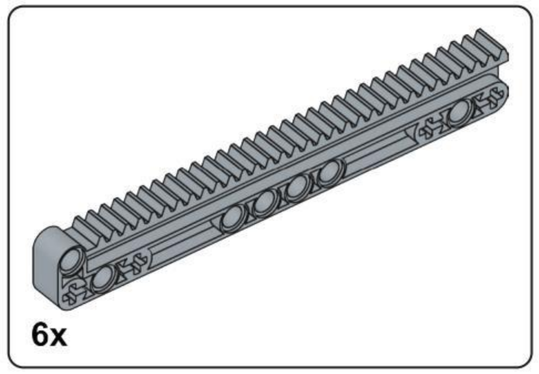


## C184

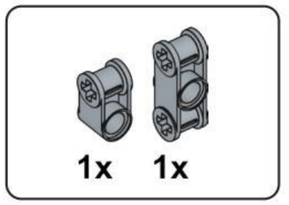


## C185

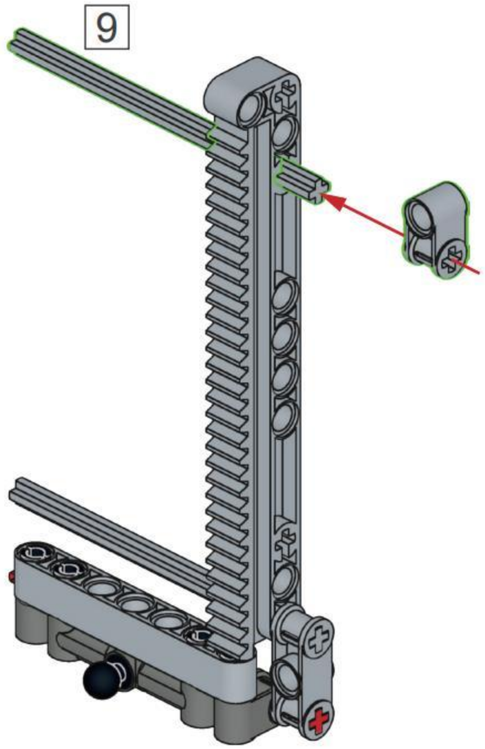


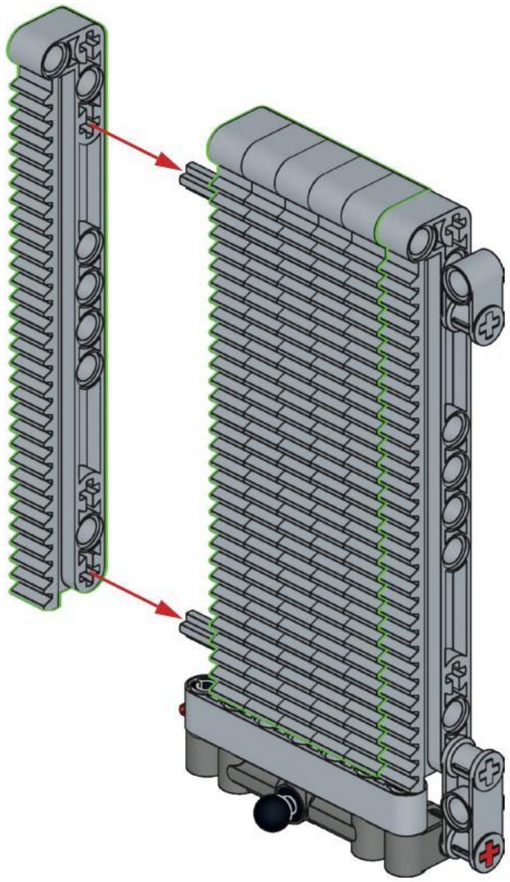

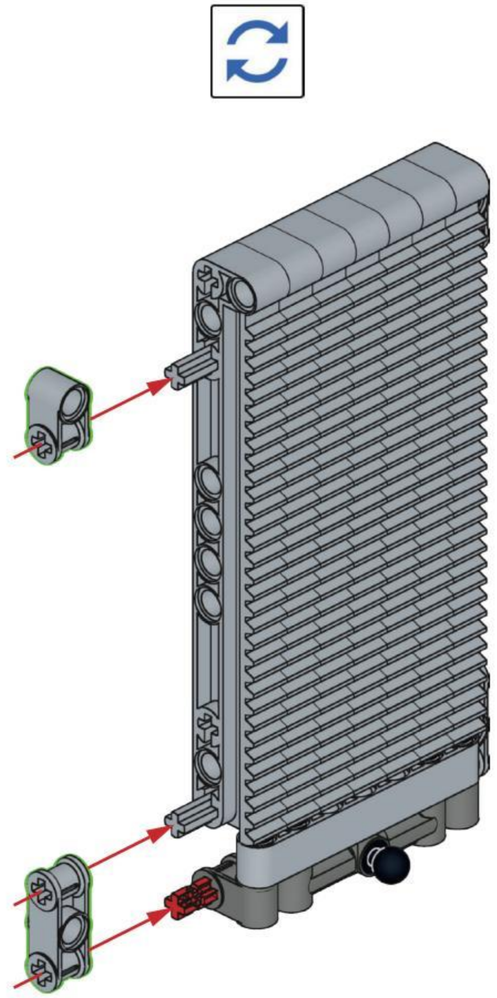

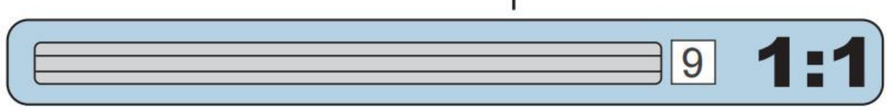

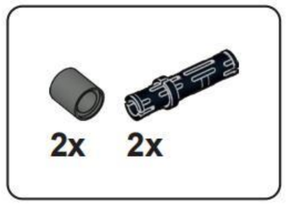


## C186

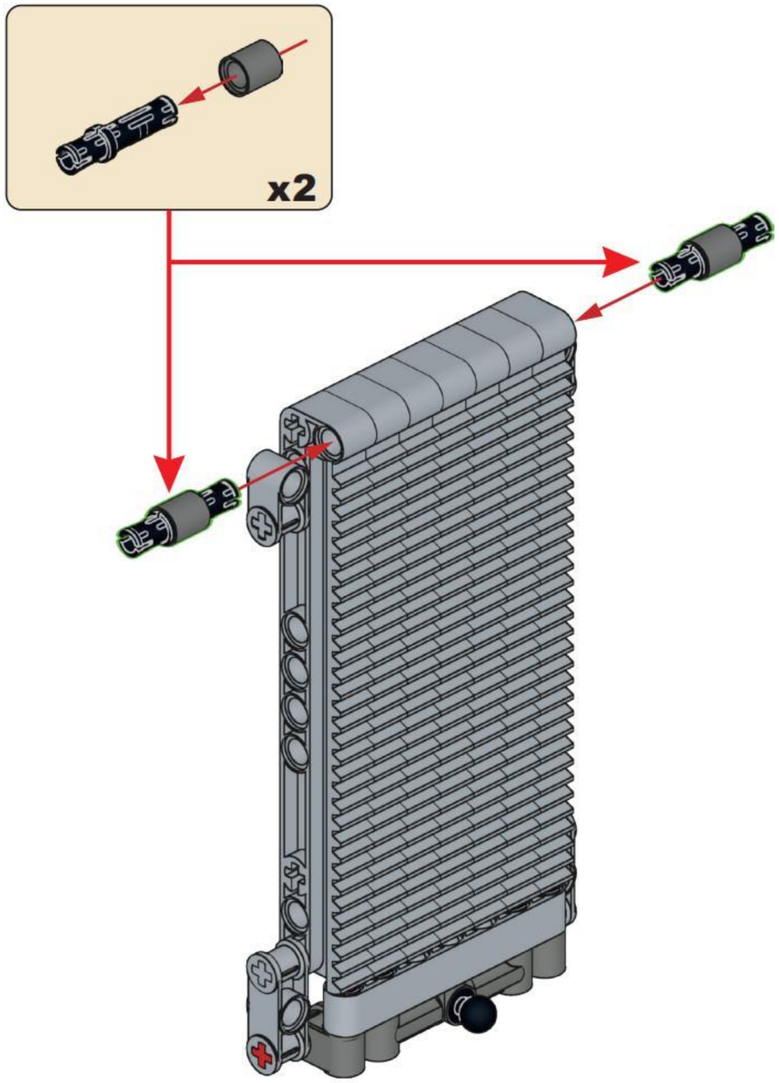


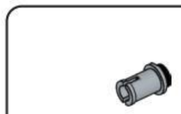


## C187

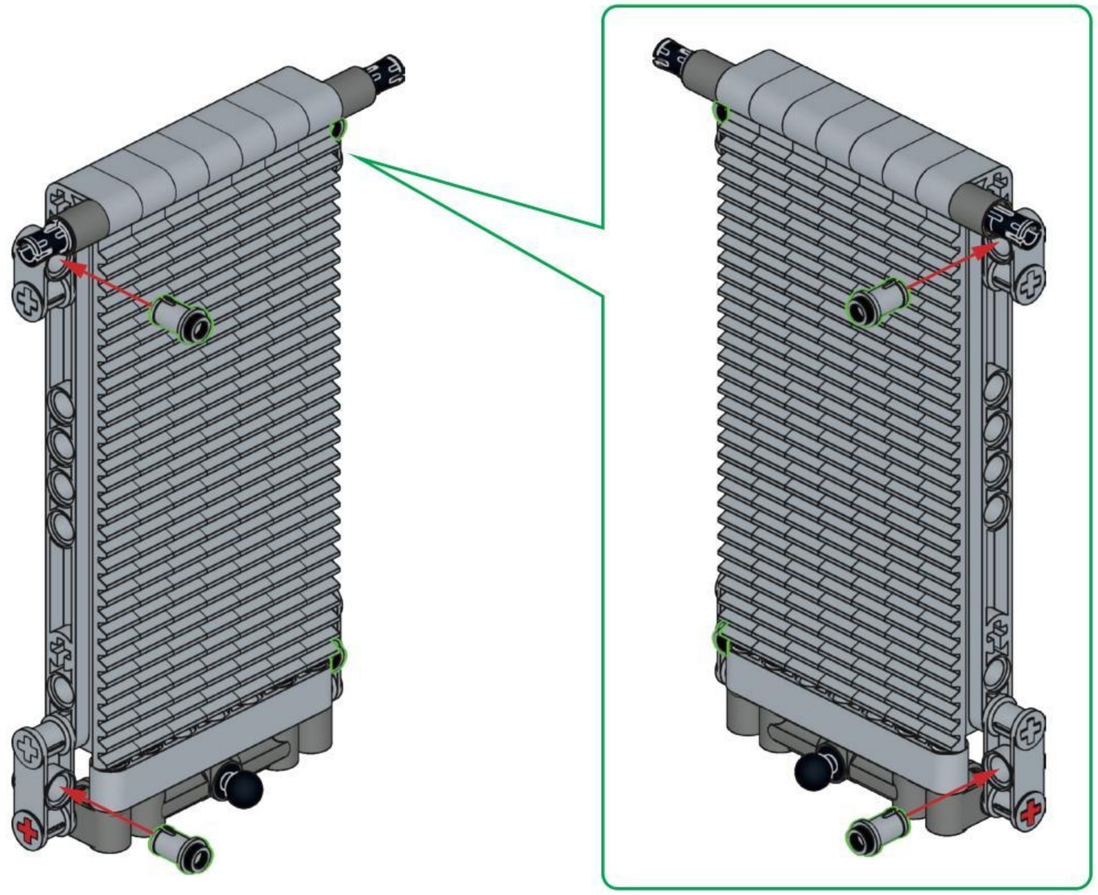

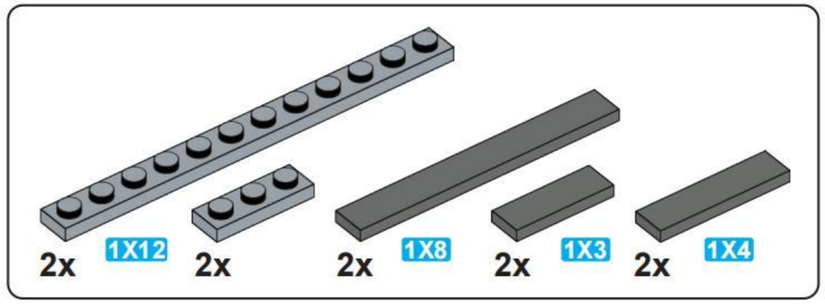


## C188

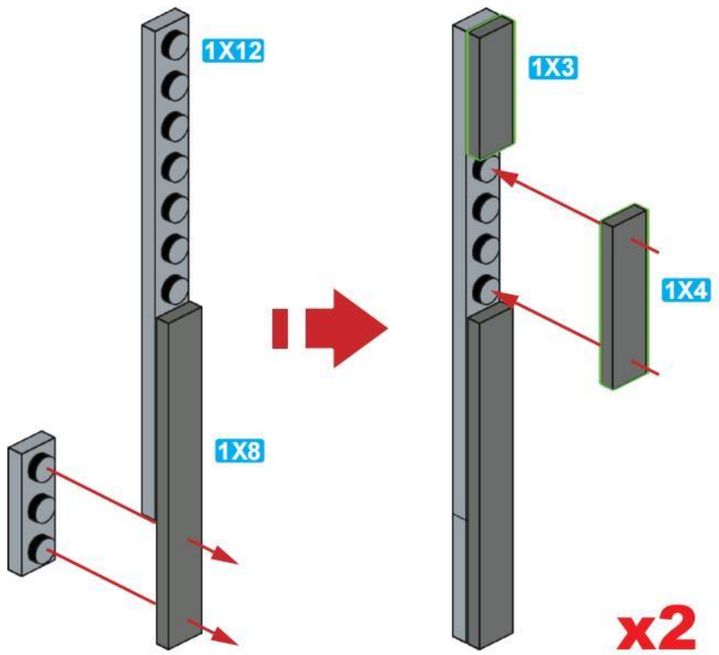


## C189

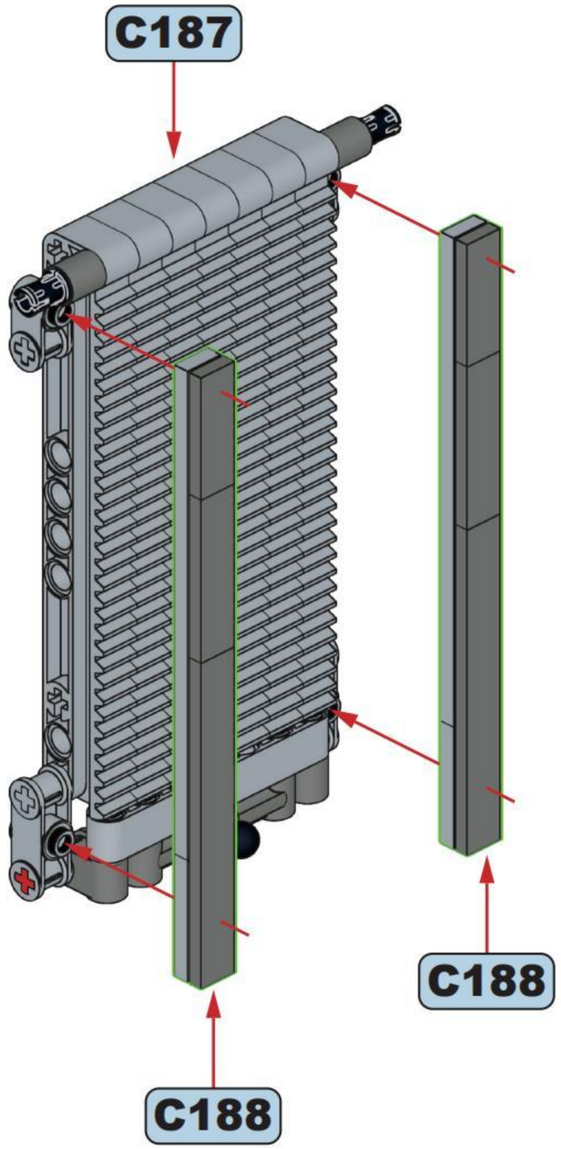


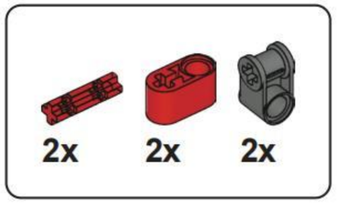


## C190

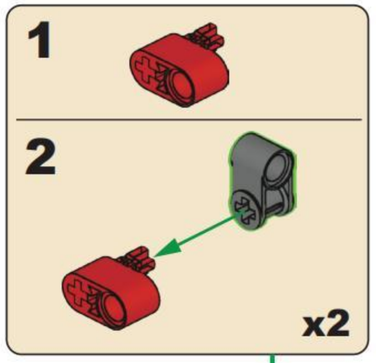


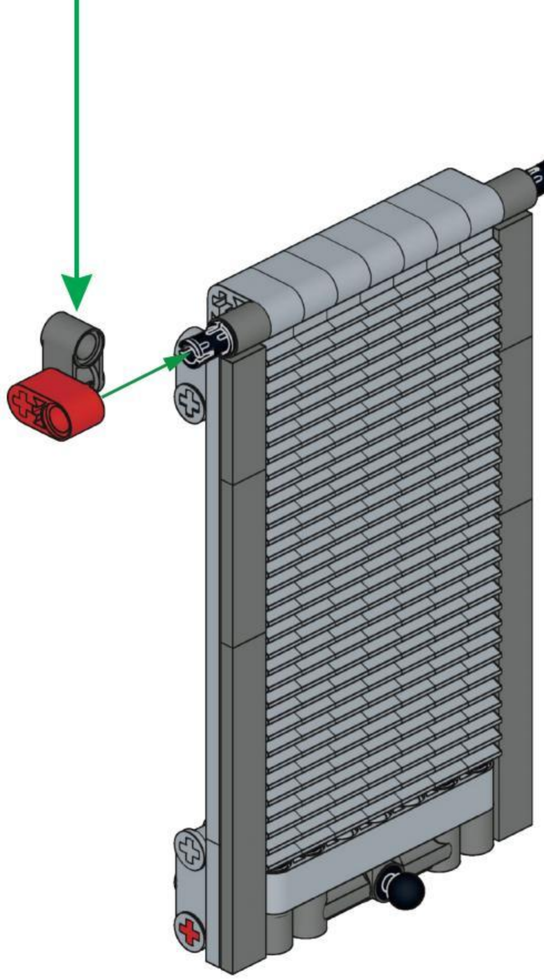

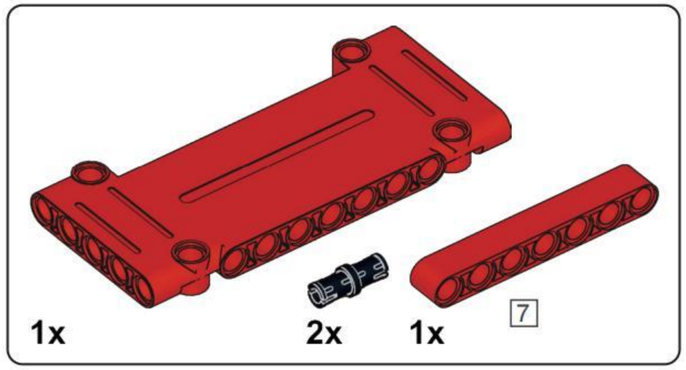


C191

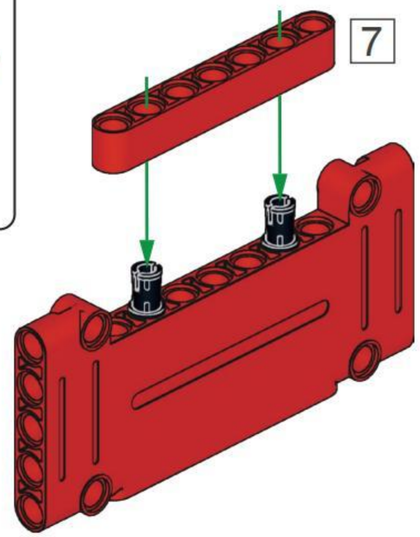


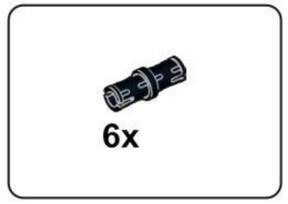


C192

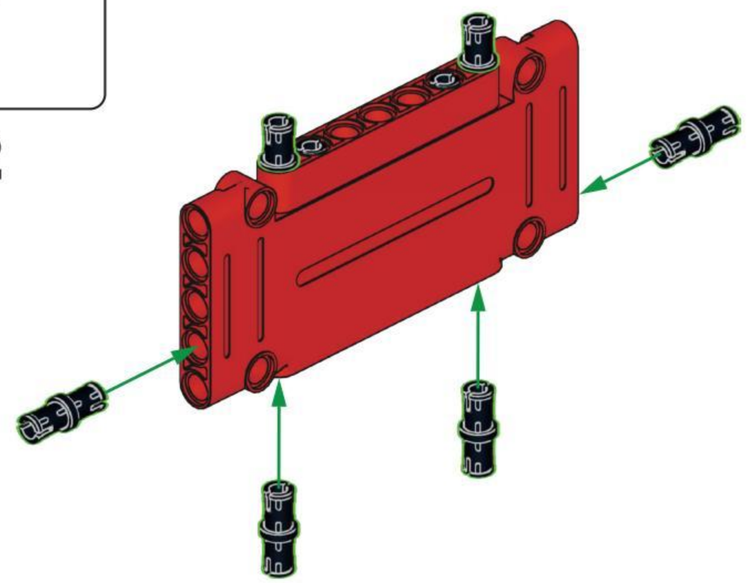

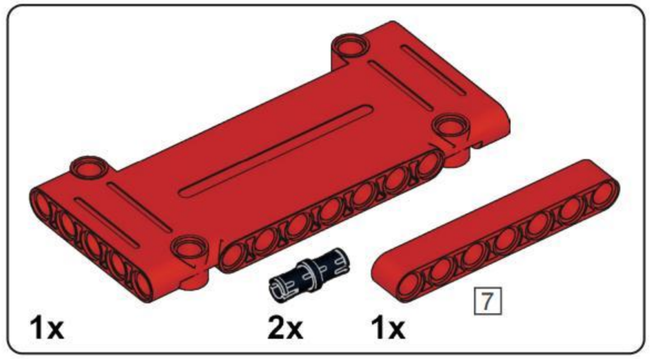


C193

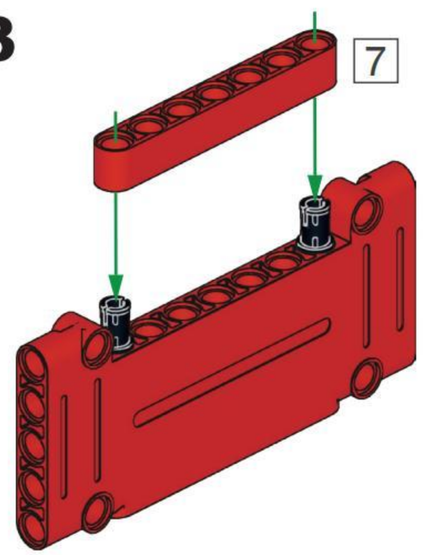





C194

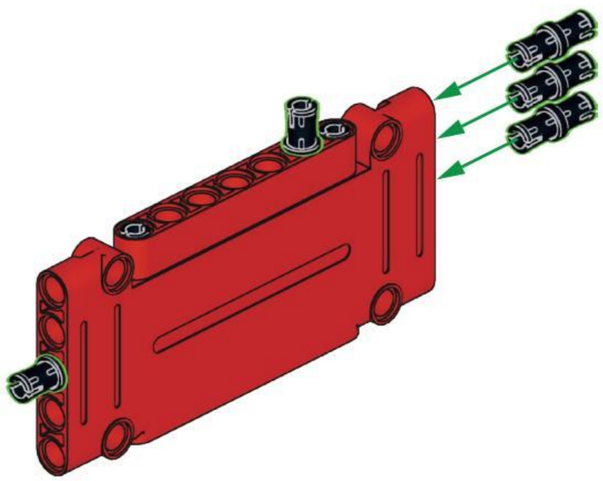

C195

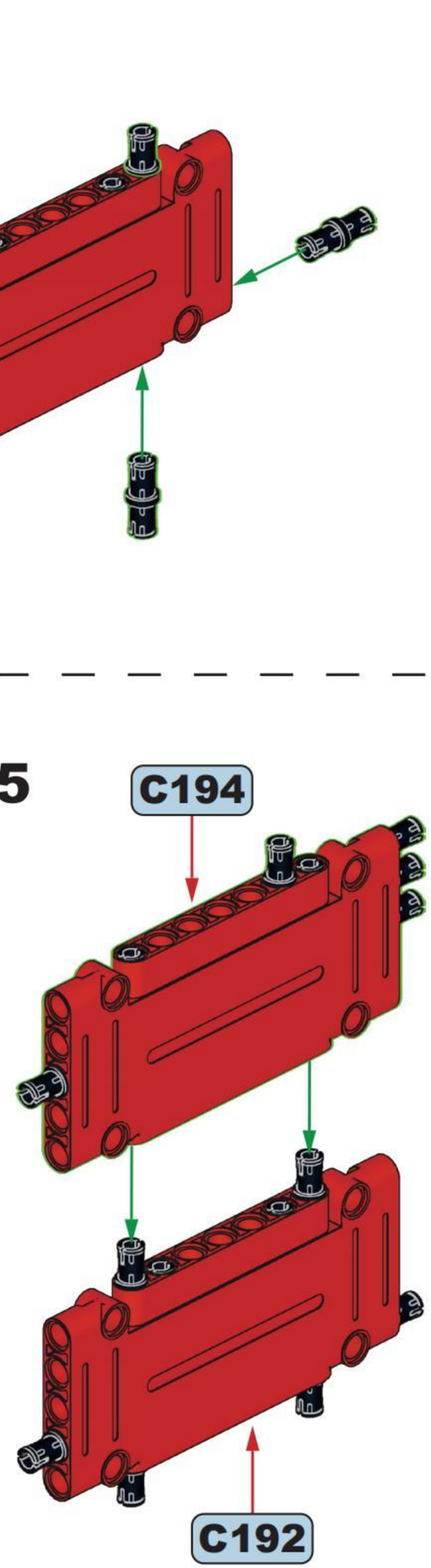


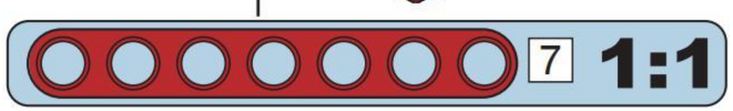

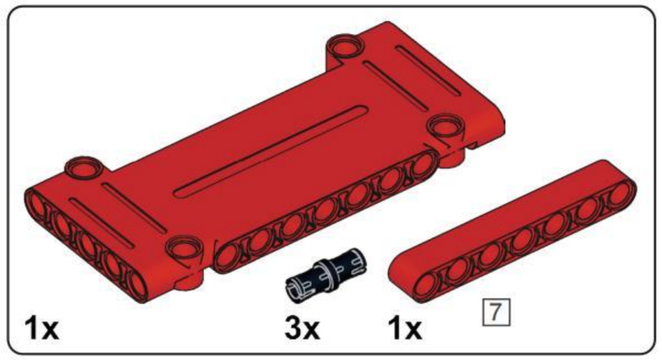


## C196

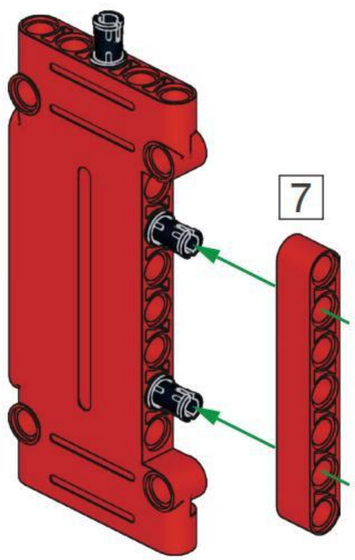


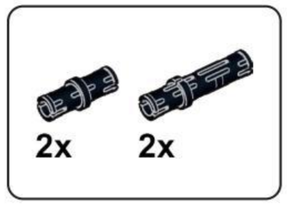


## C197

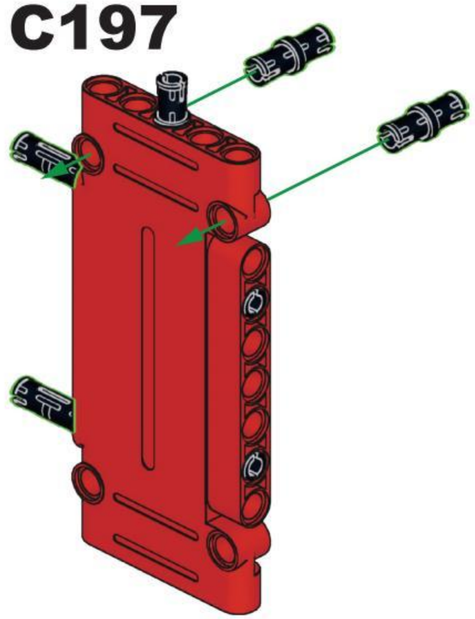

## C198

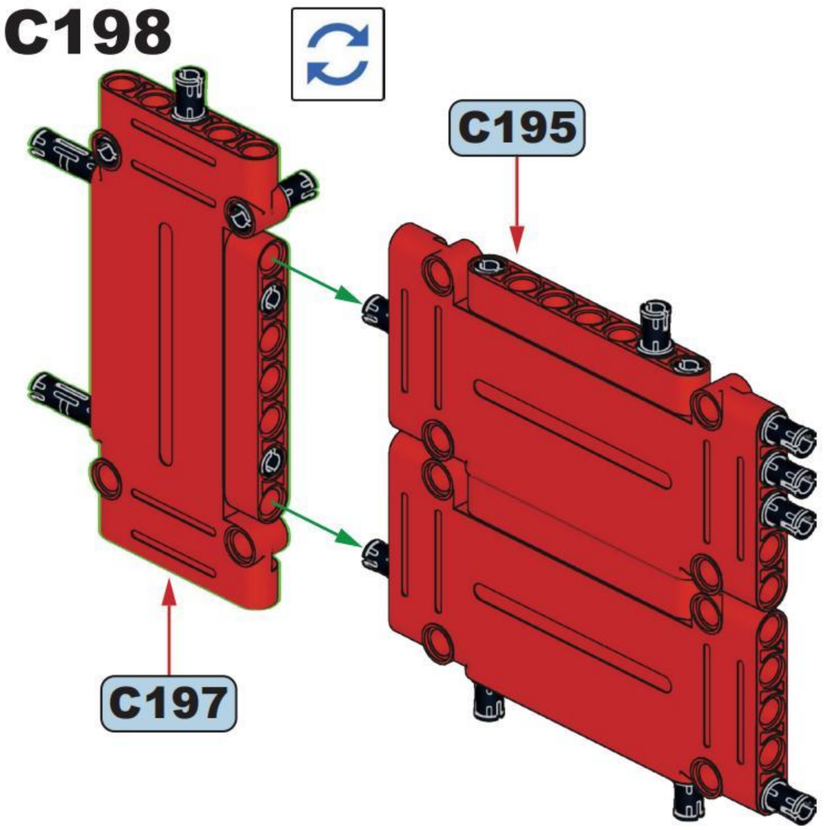


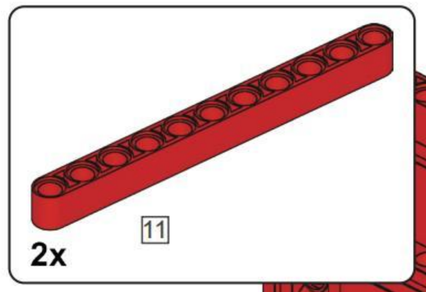


## C199

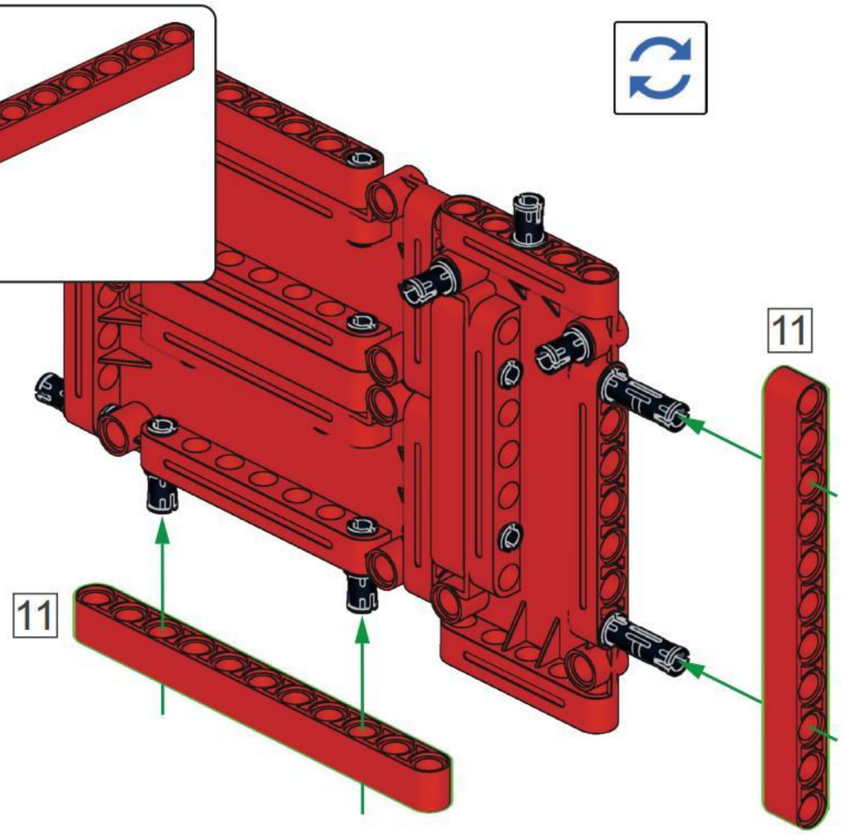


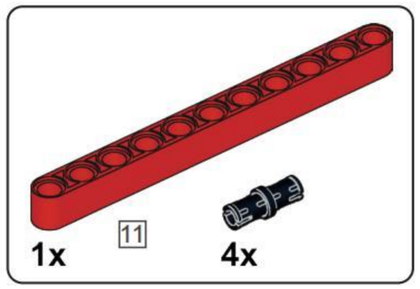


## C200

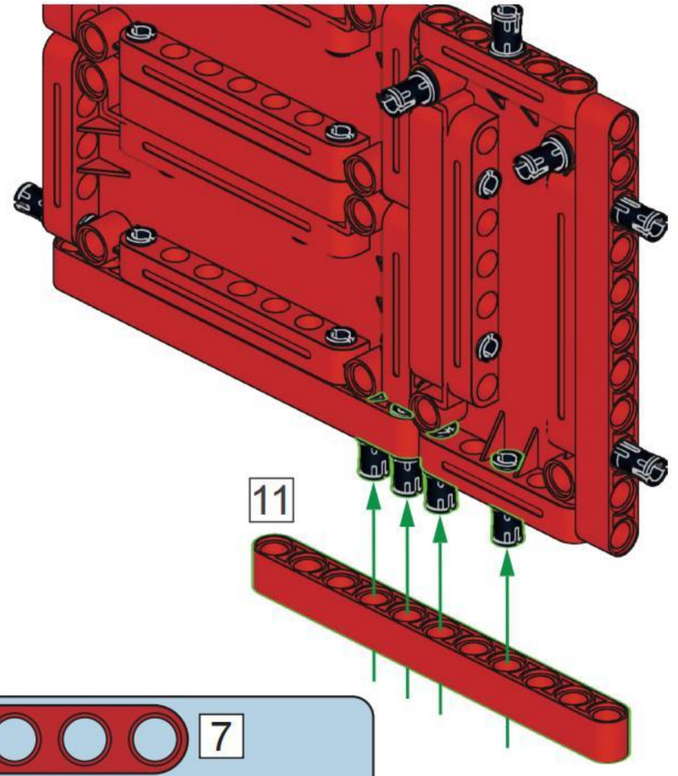


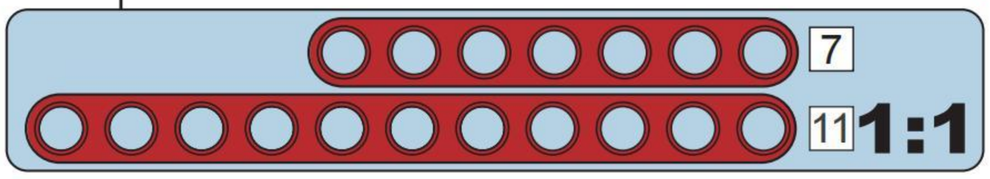

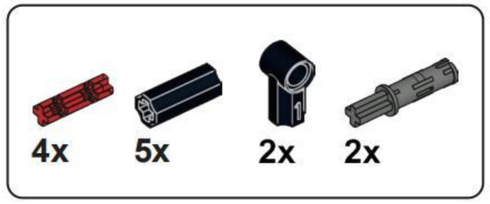


## C201

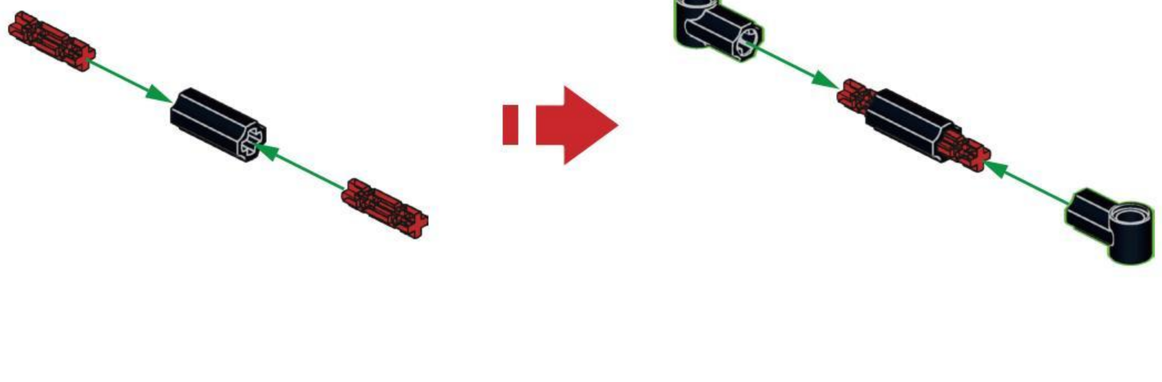

## C202

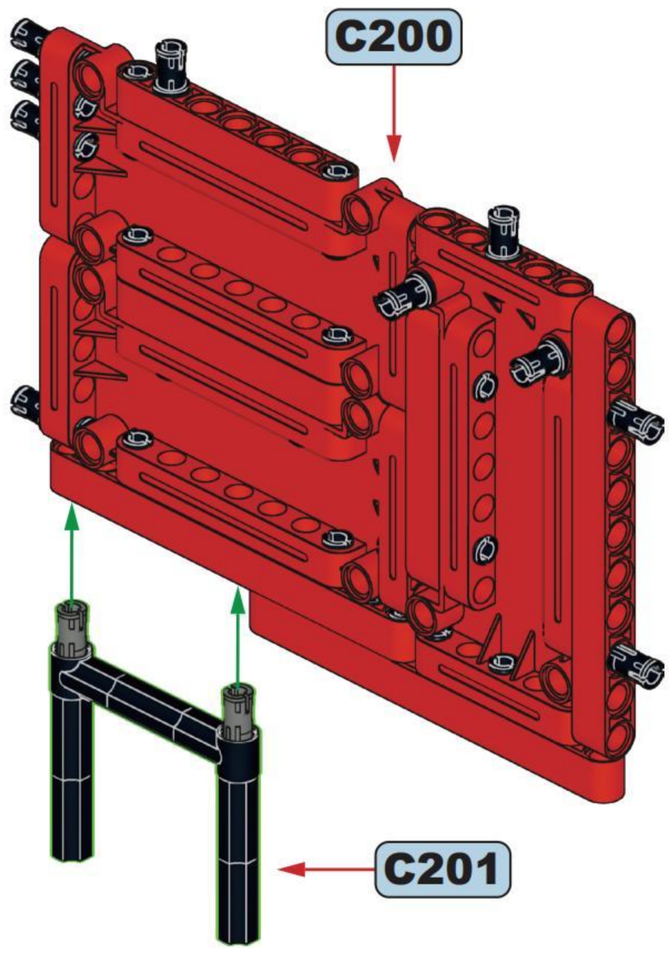


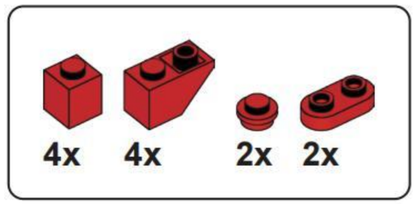


## C203

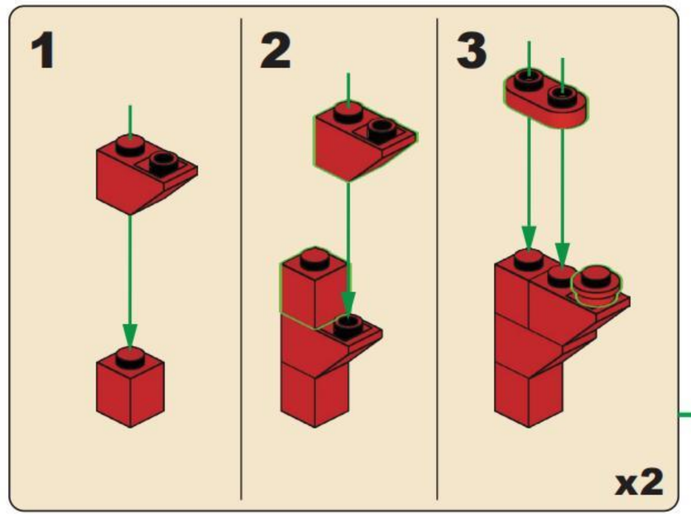


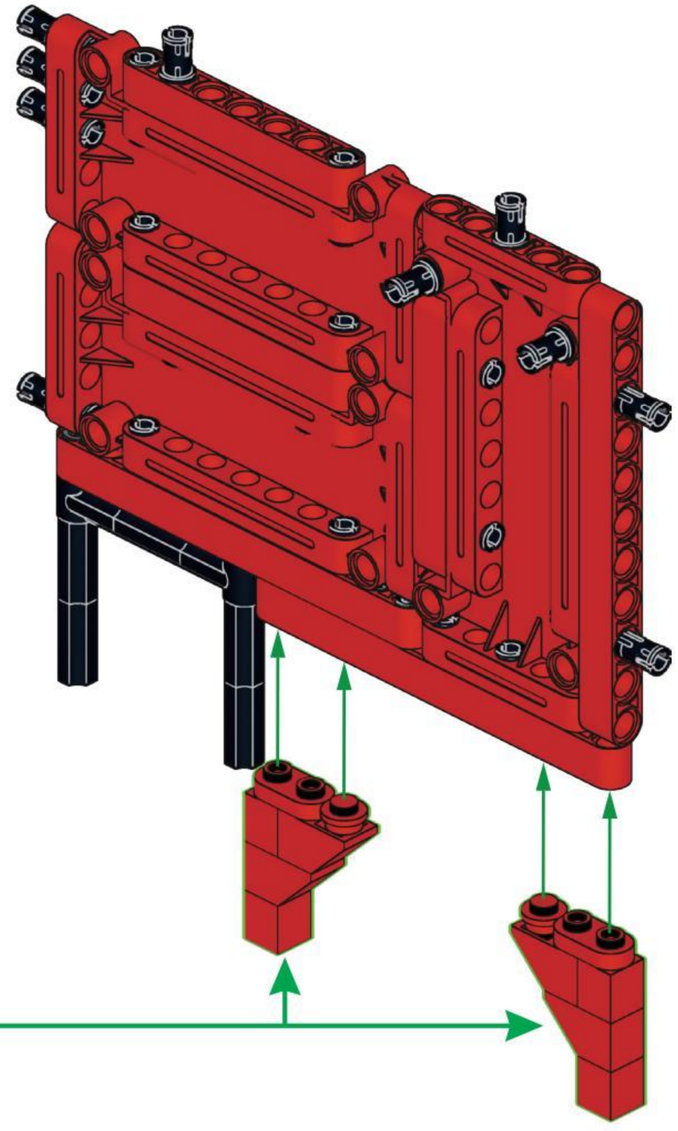

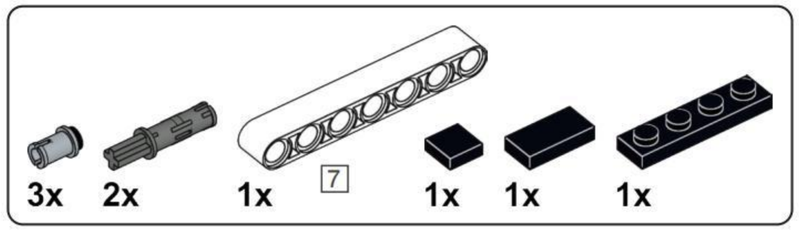


## C204

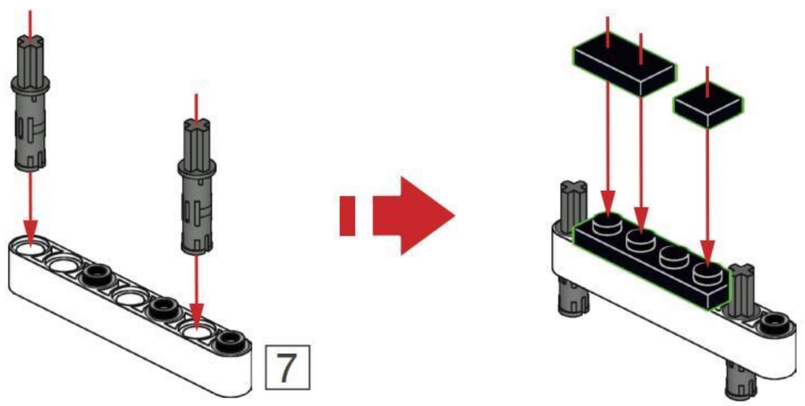


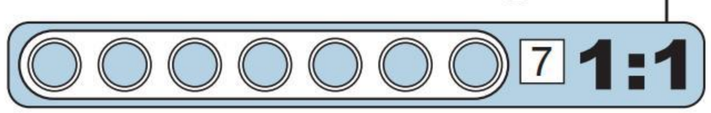


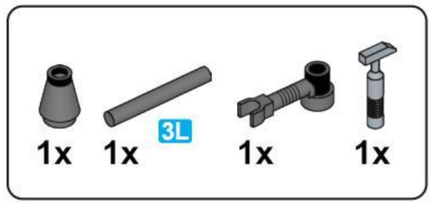


## C205

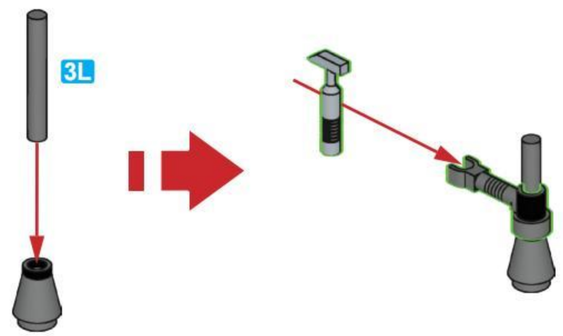


## C206

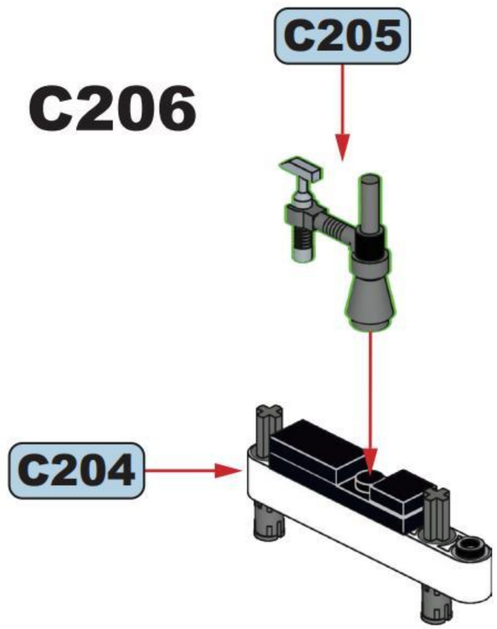


## C207

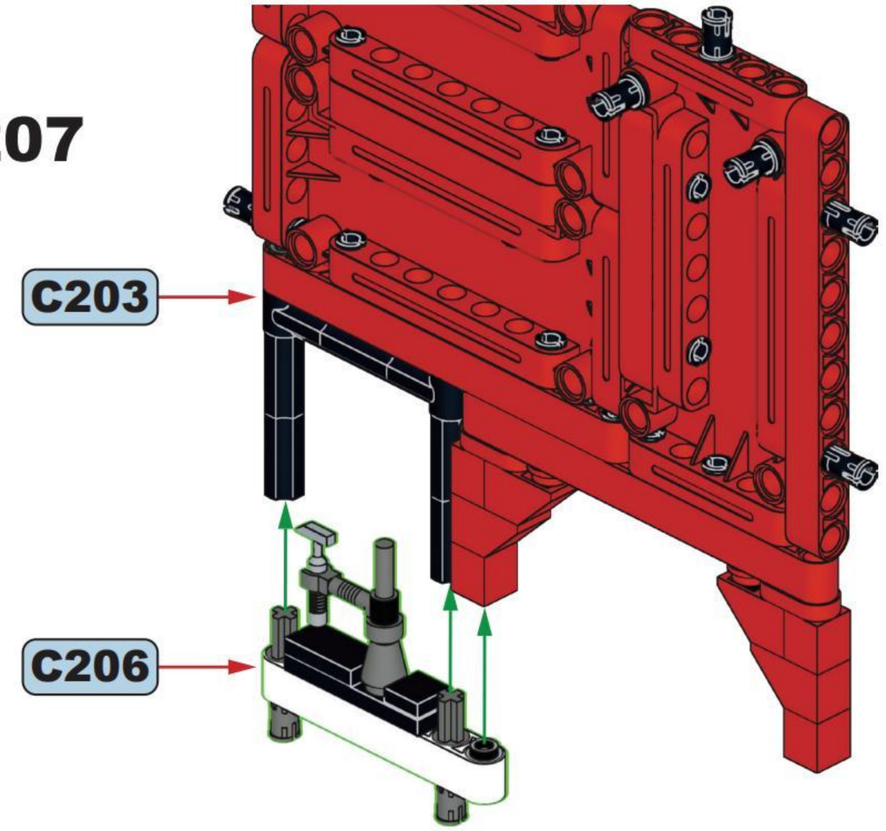


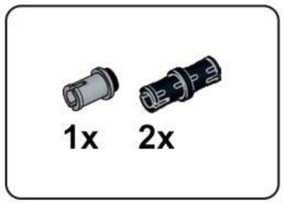


## C208

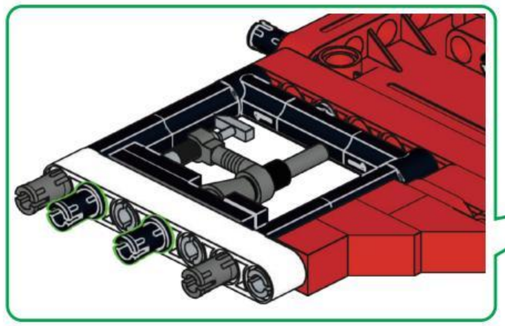

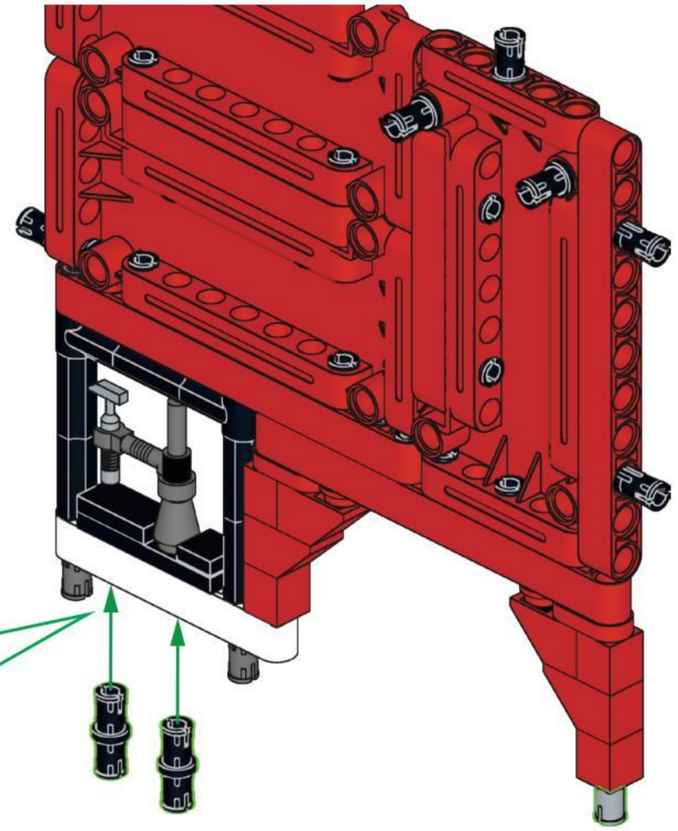

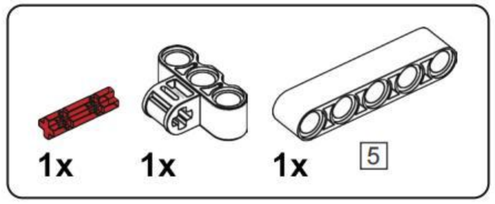


# C209

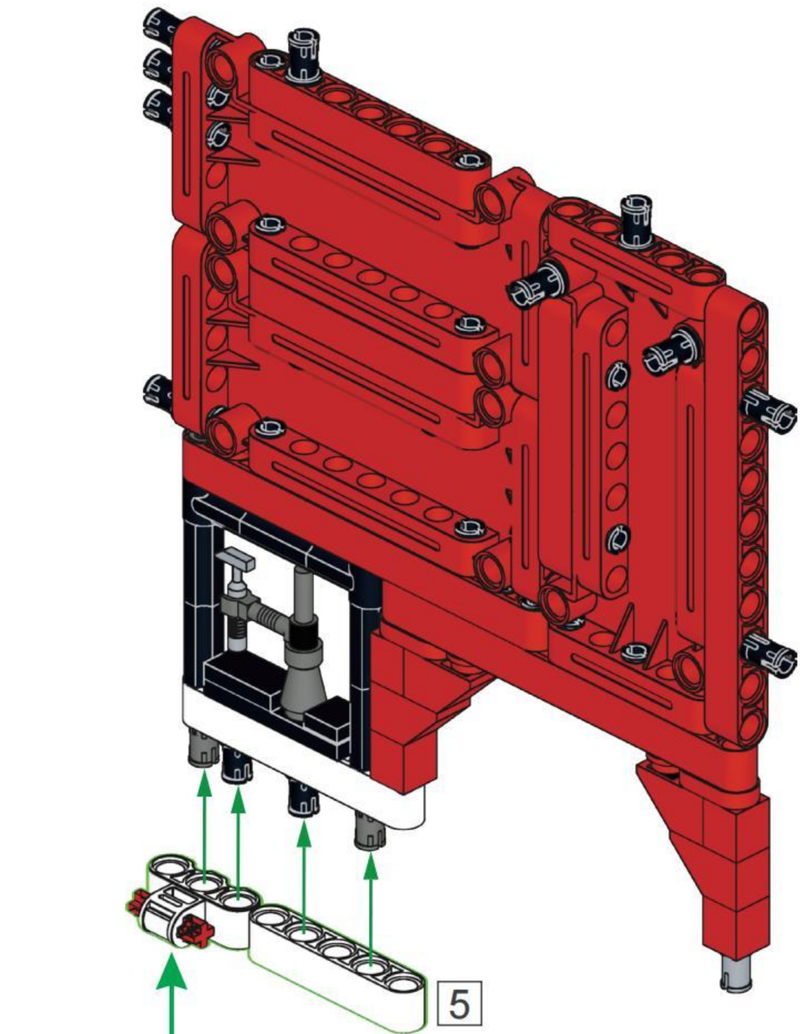


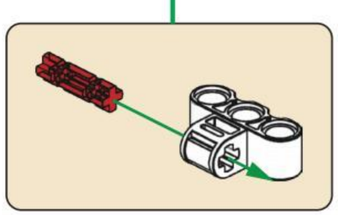

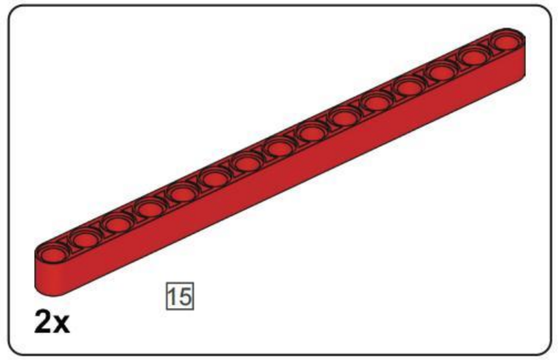


# C210

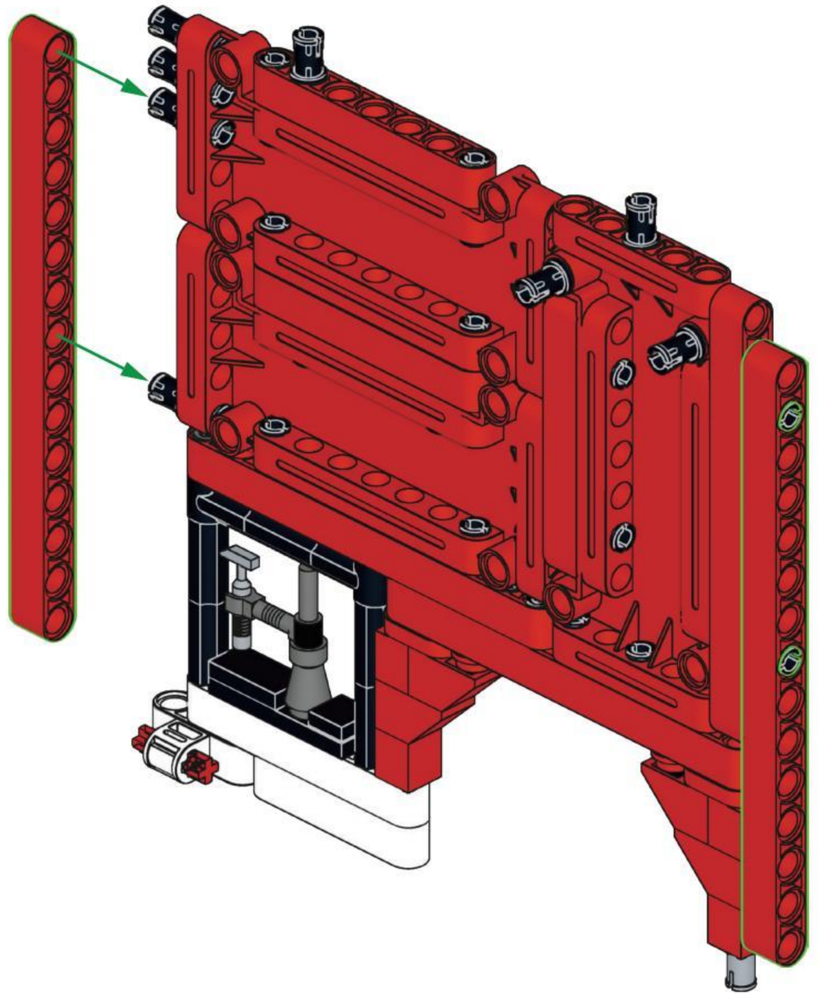


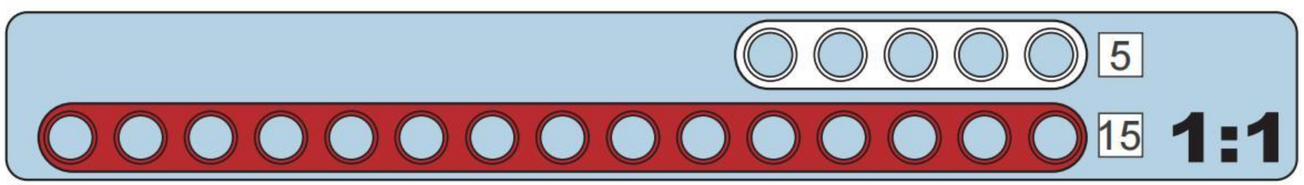

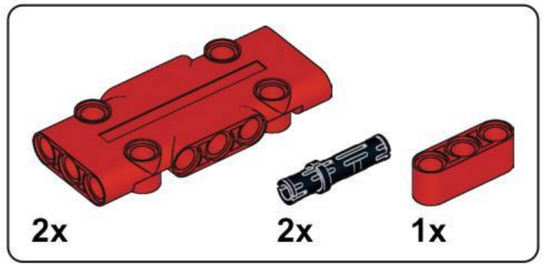


## C211

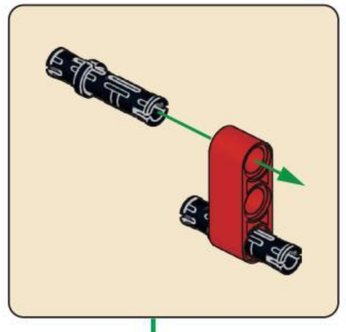

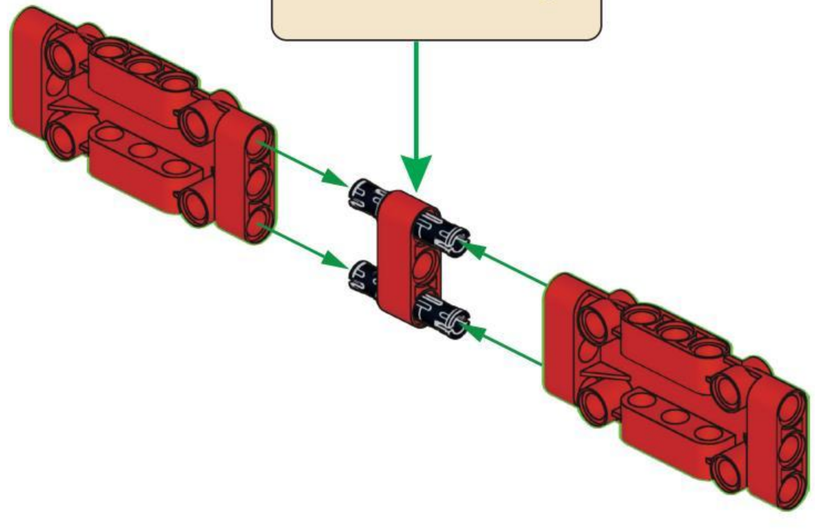

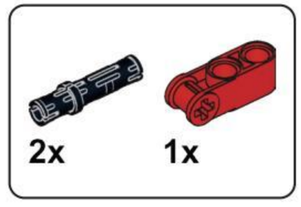


## C212

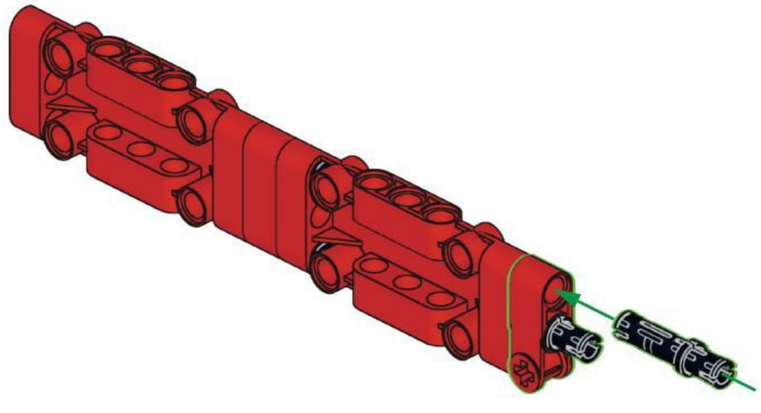

## C213

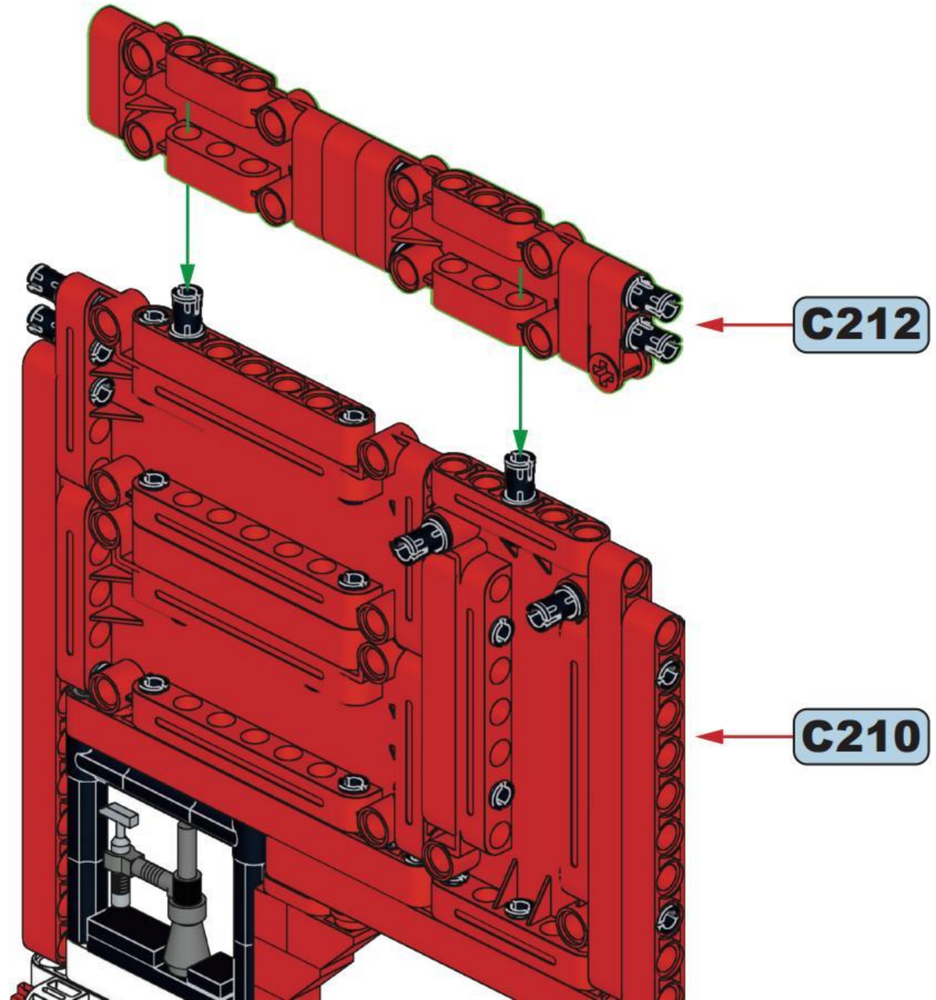

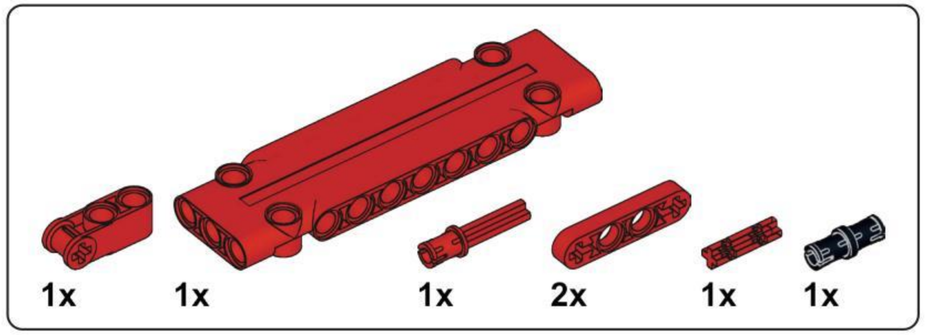


## C214

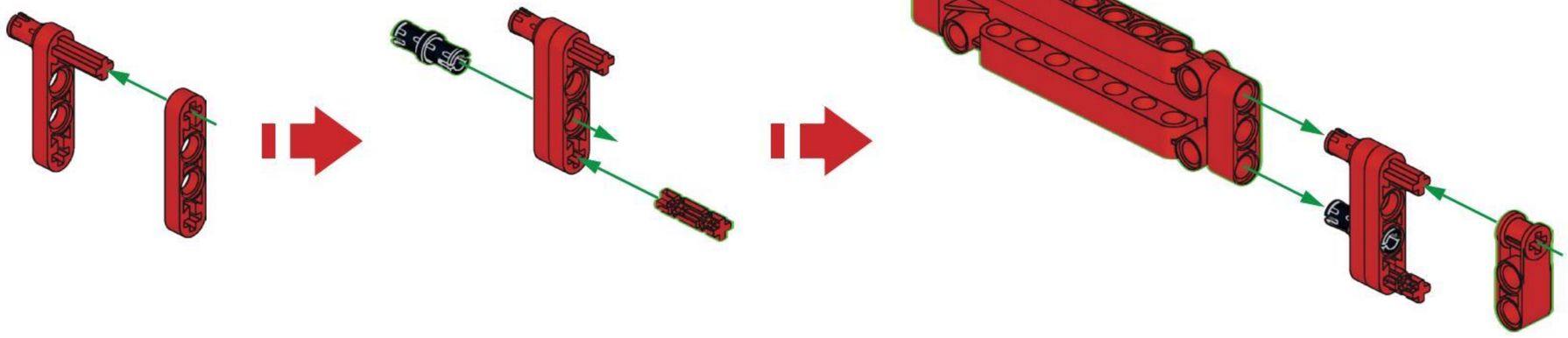

## C215

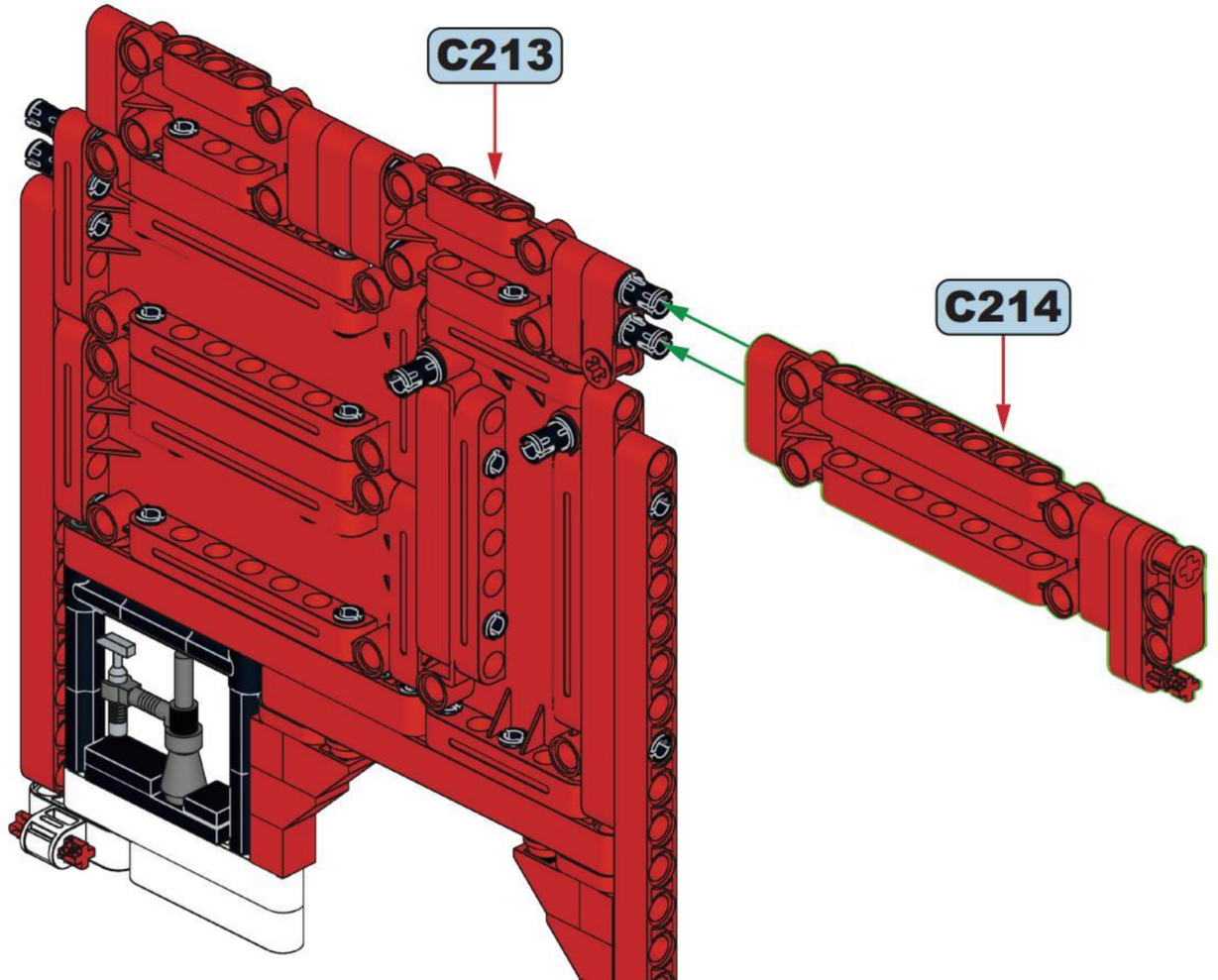

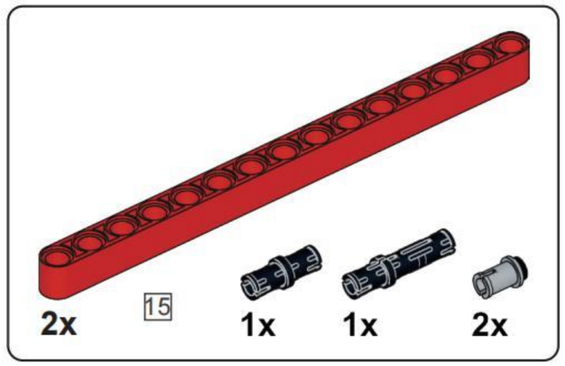


## C216

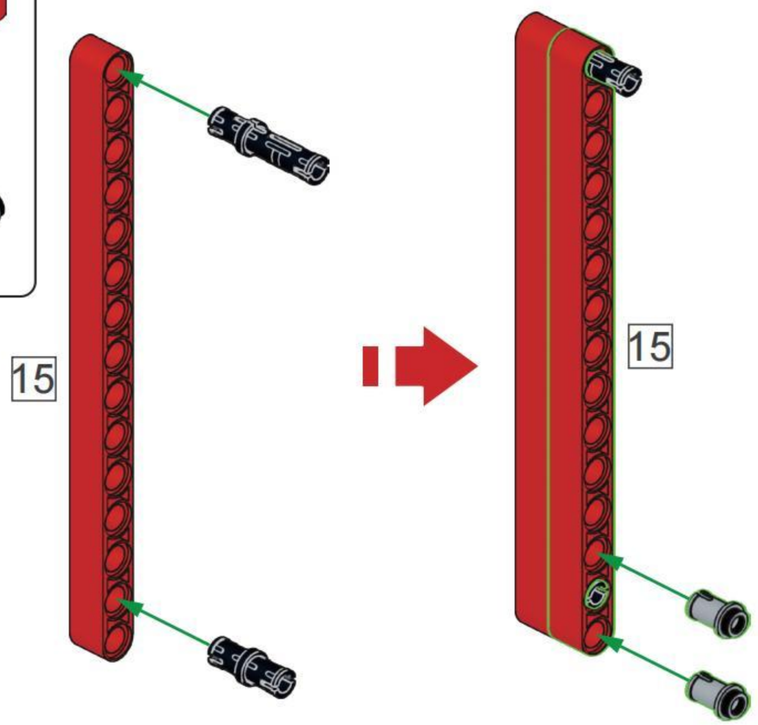


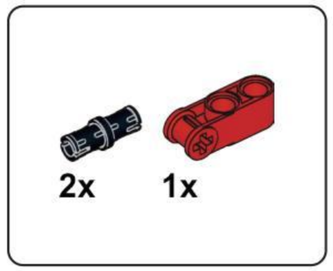


## C217

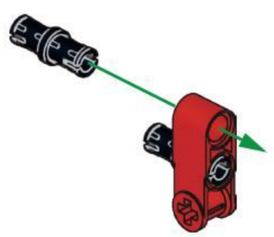

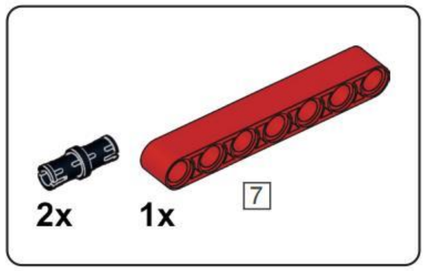


## C218

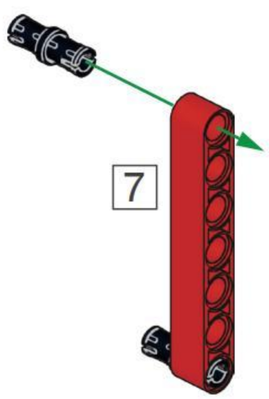


## C219

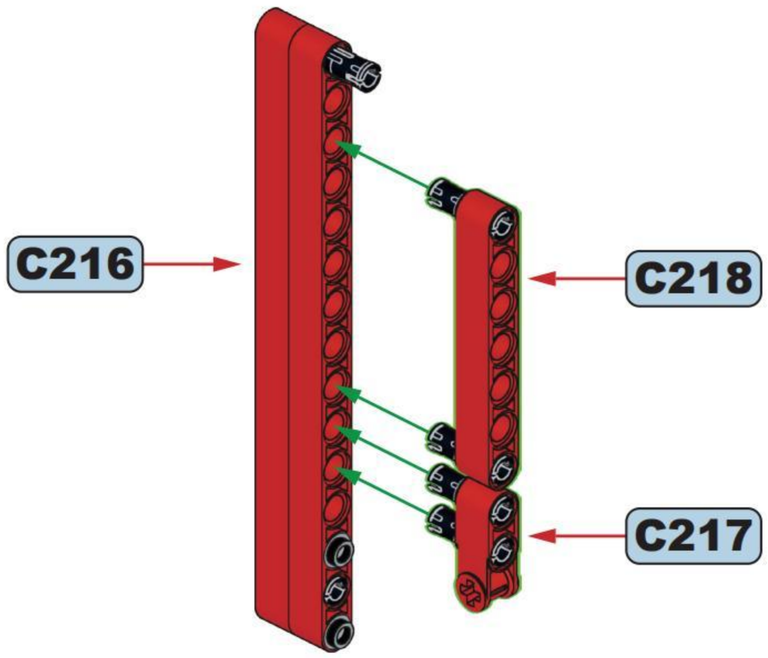


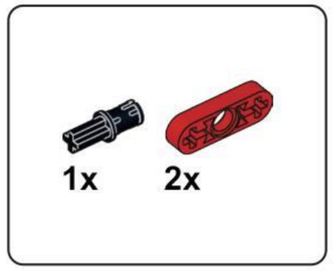


## C220

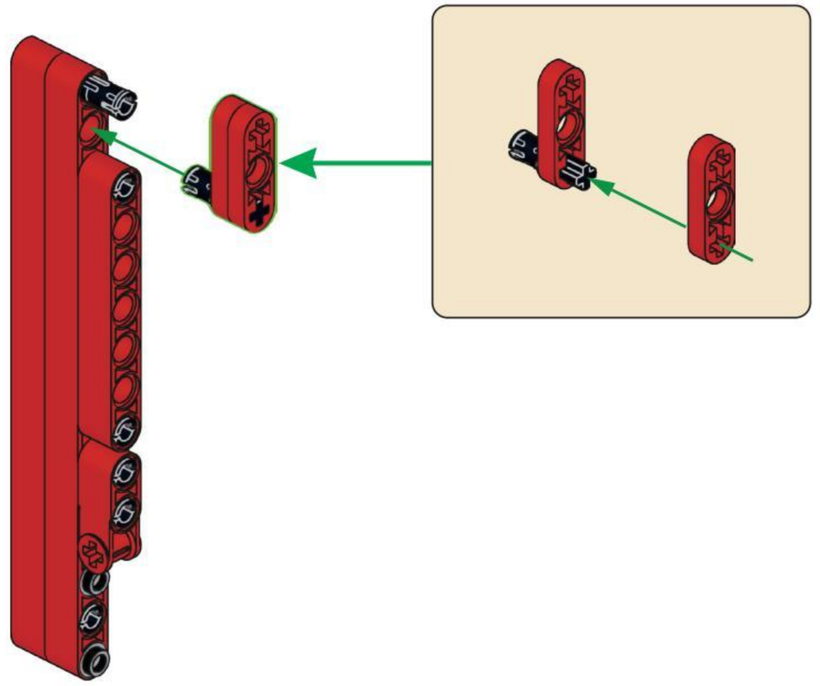

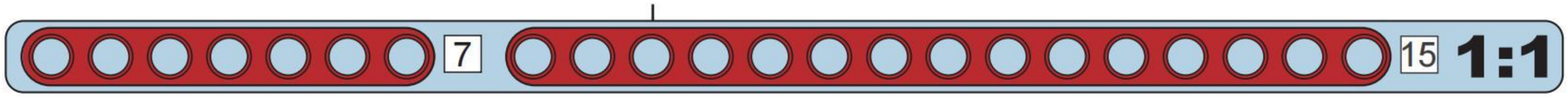

# C221

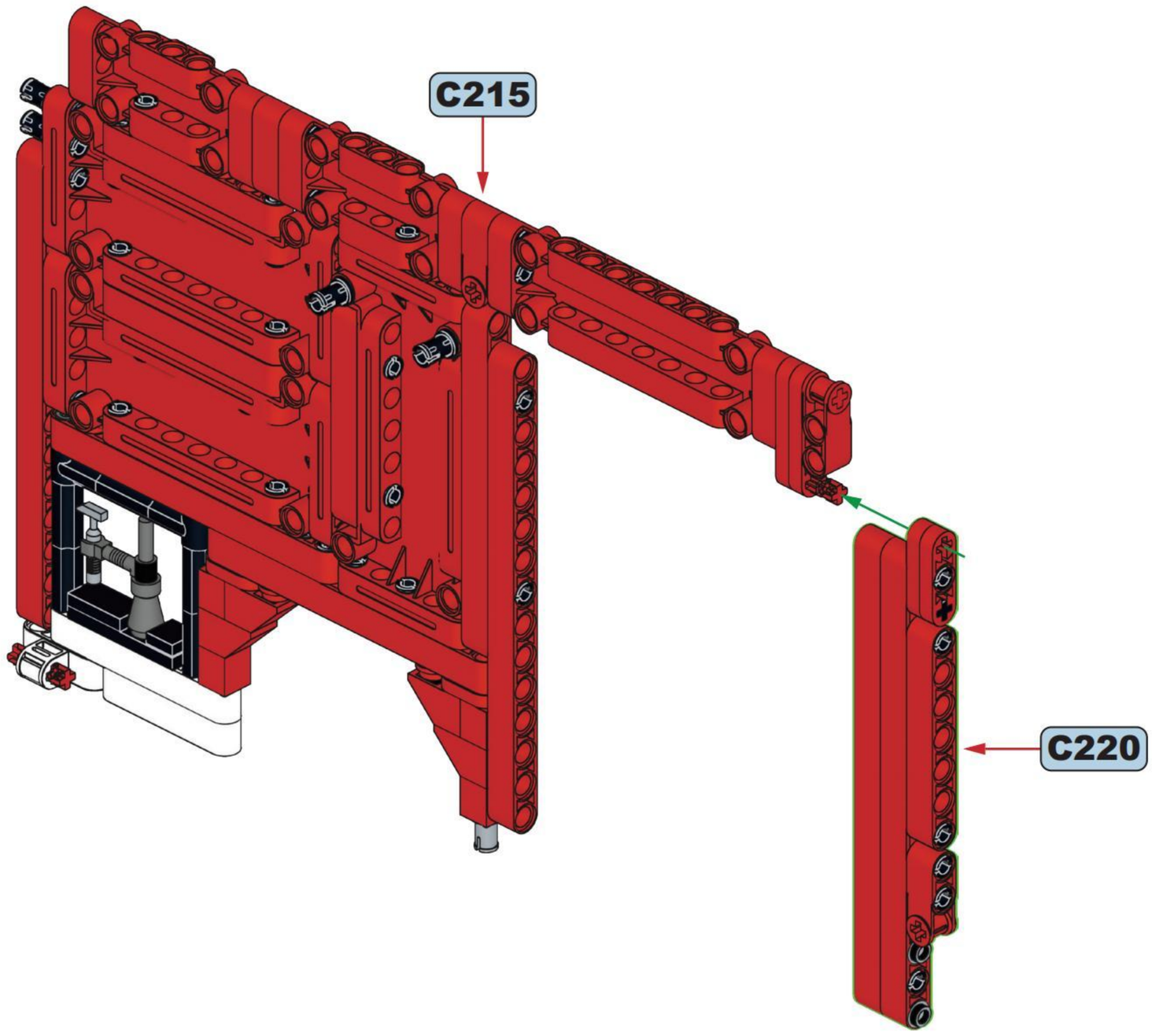

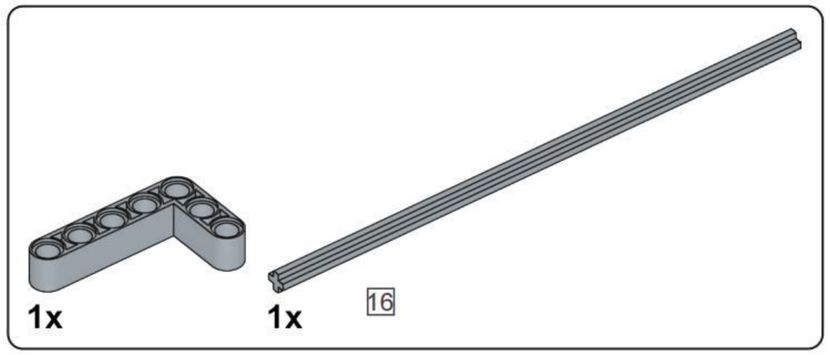

## C222

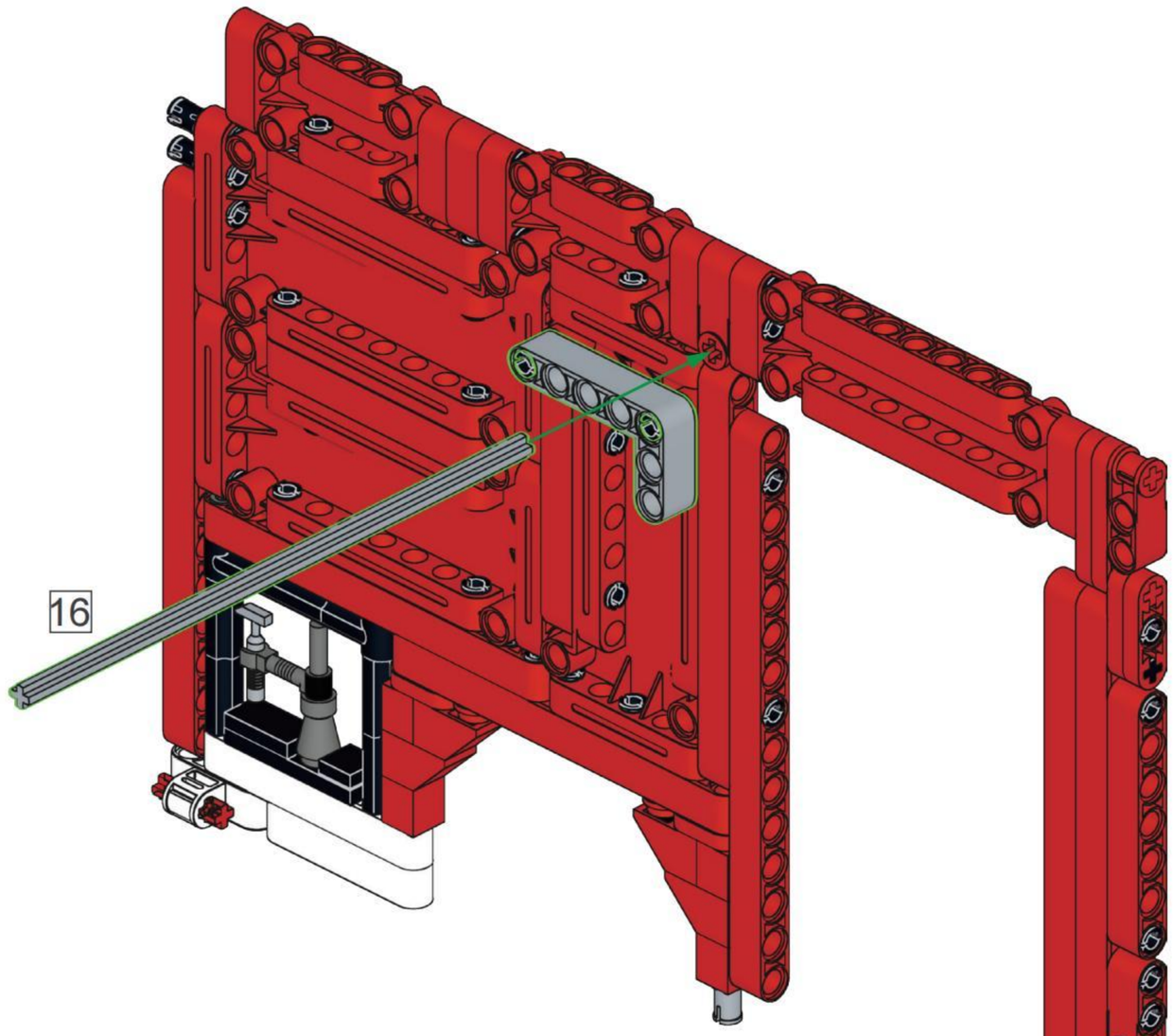

C223

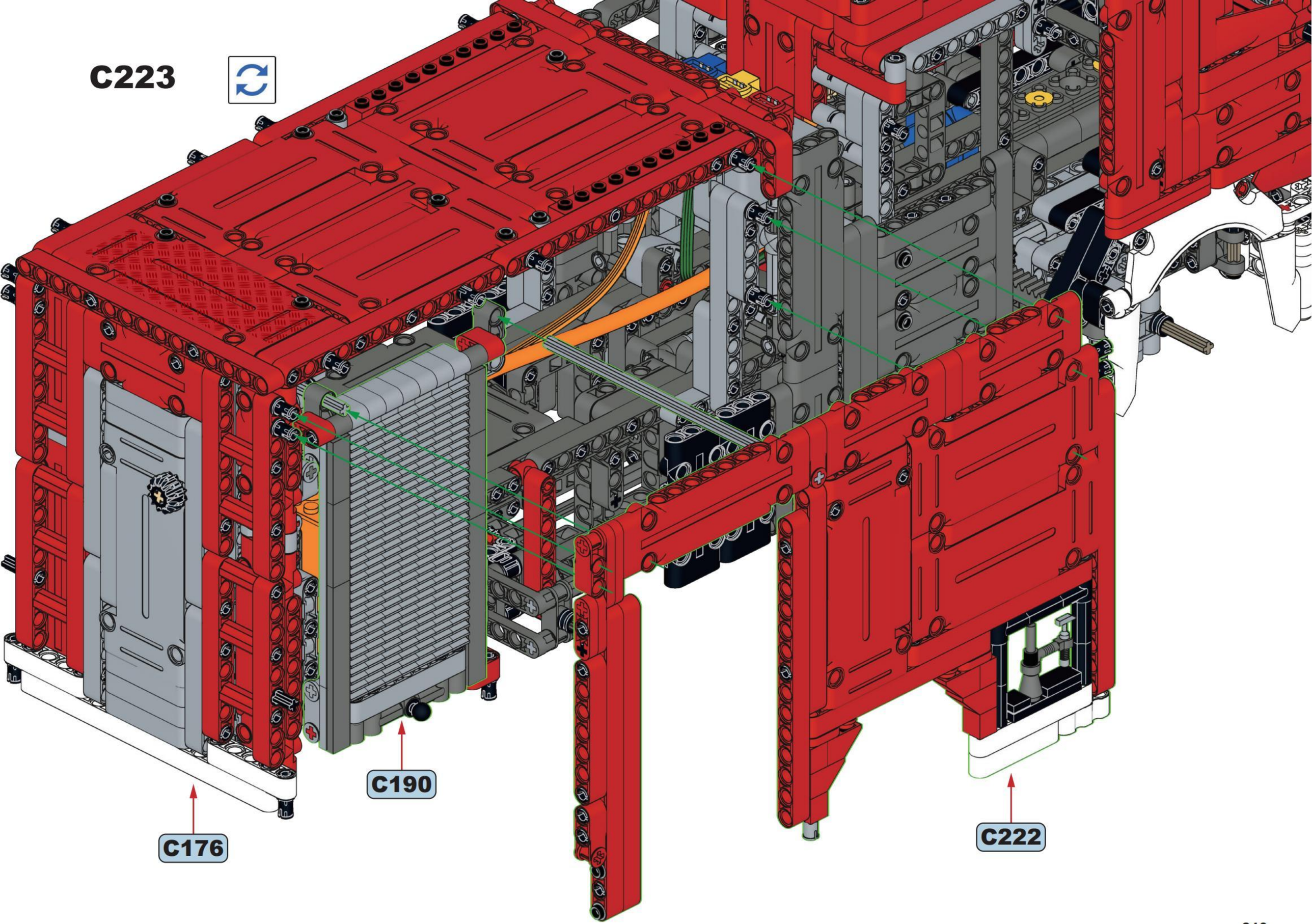

1x 1x

# C224

4

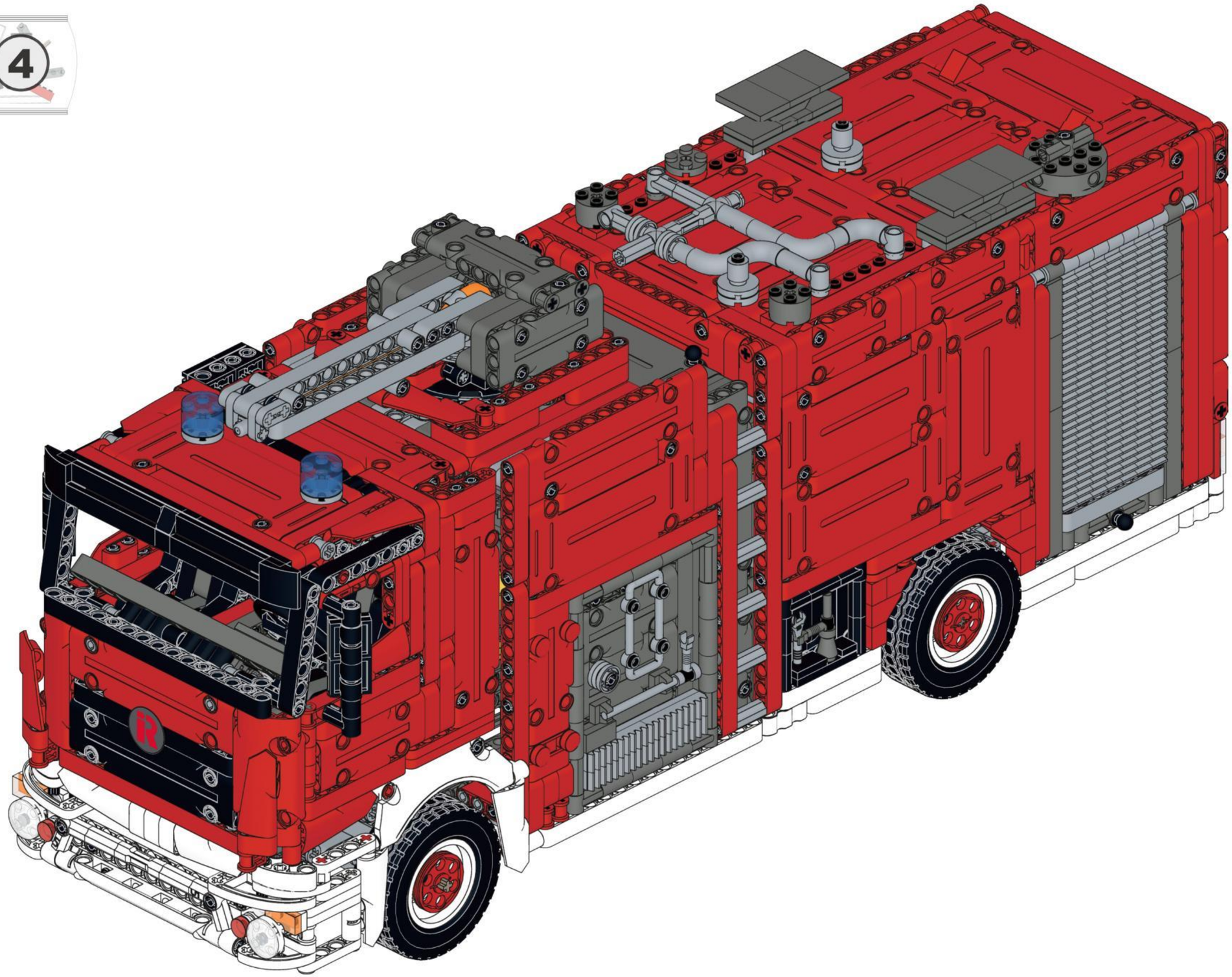

D

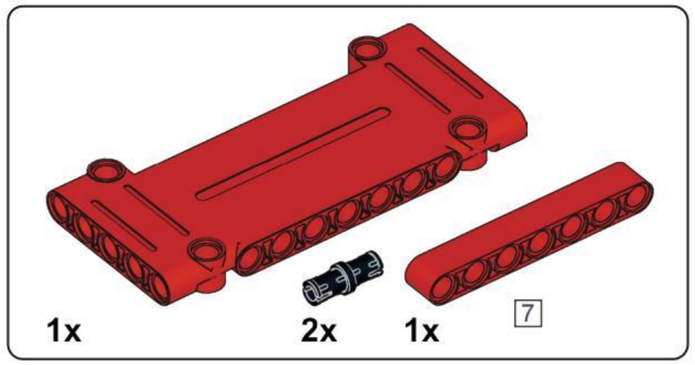


## D1

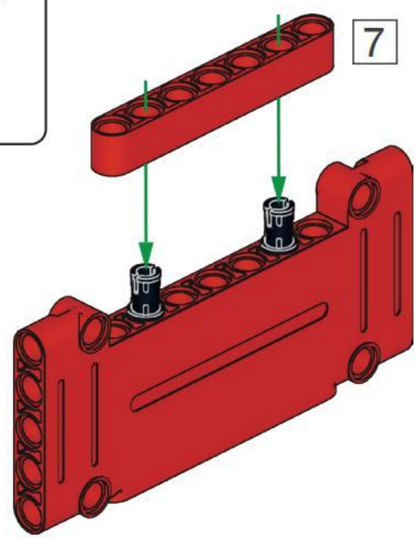


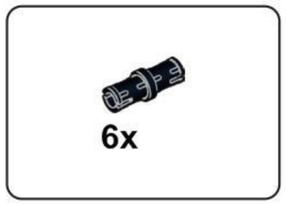


## D2

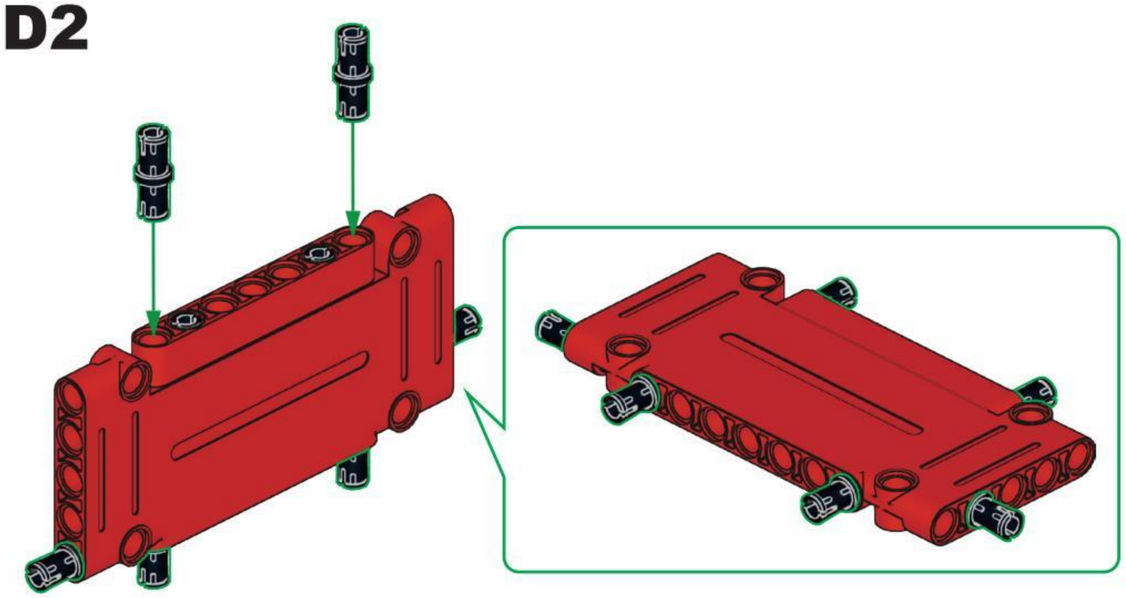

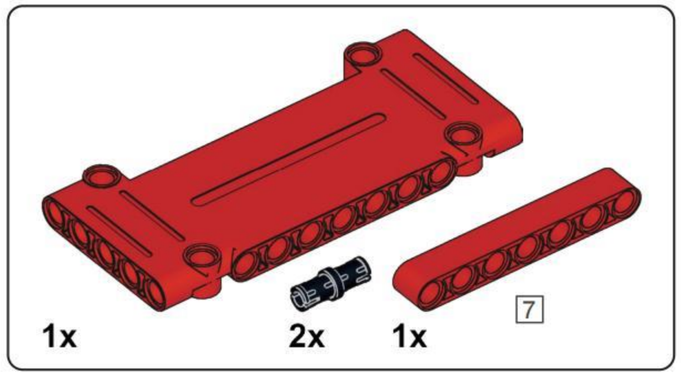


## D3

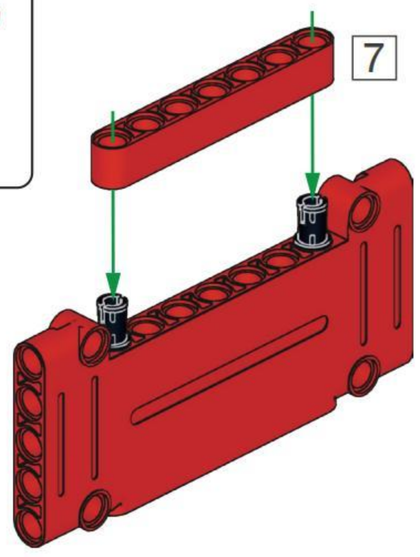


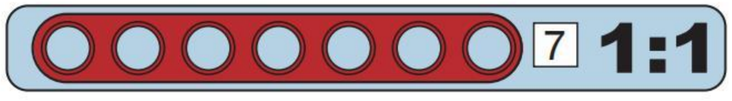


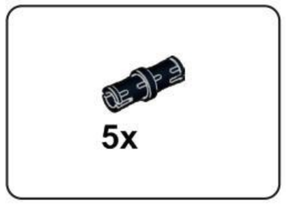


## D4

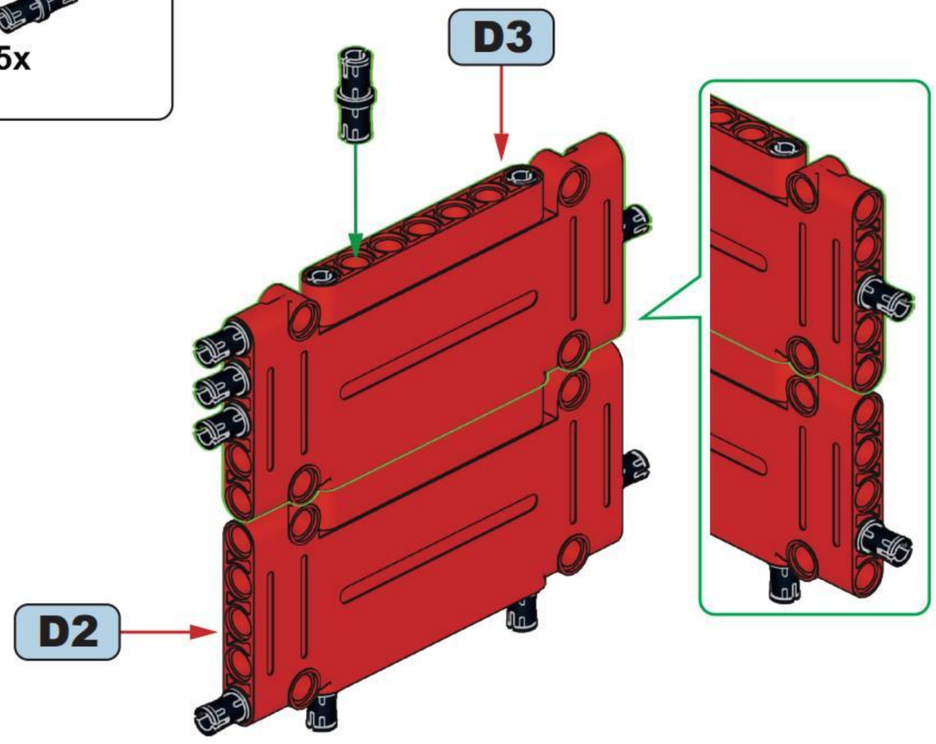

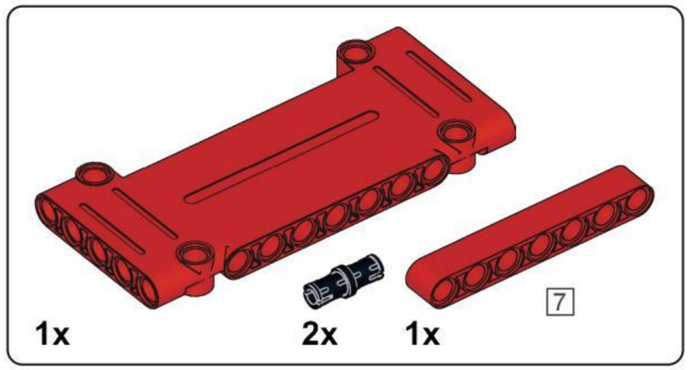


## D5

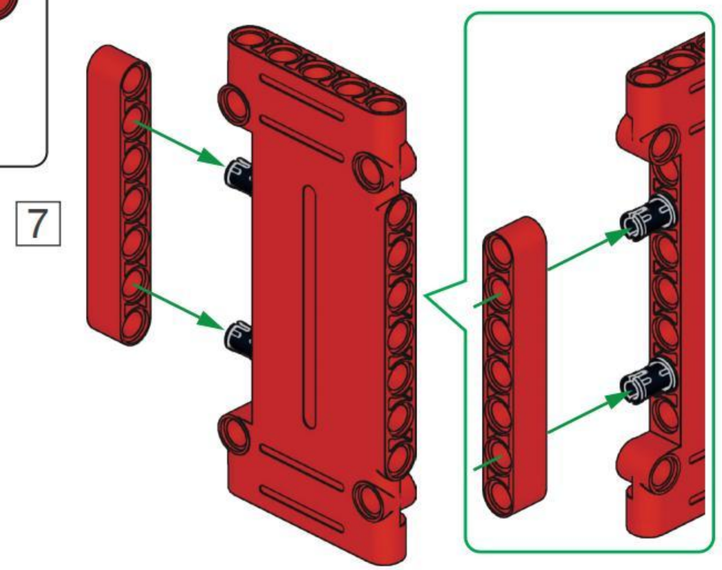


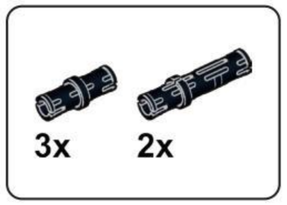


## D6

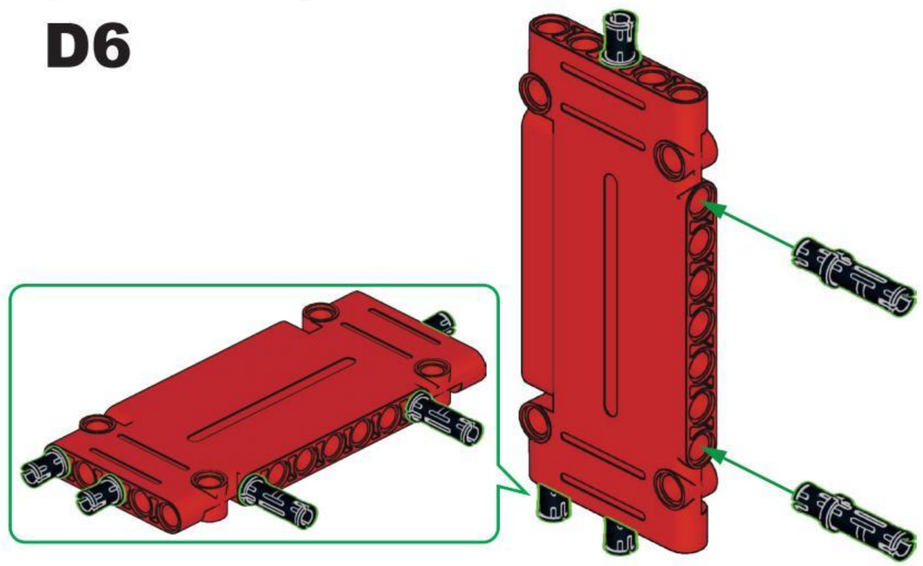

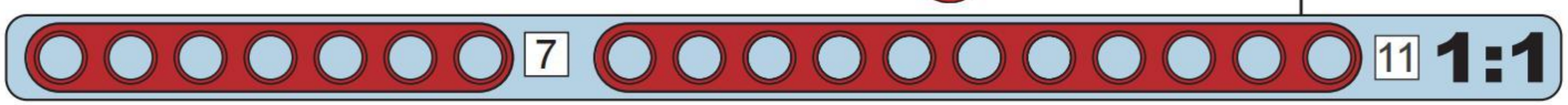


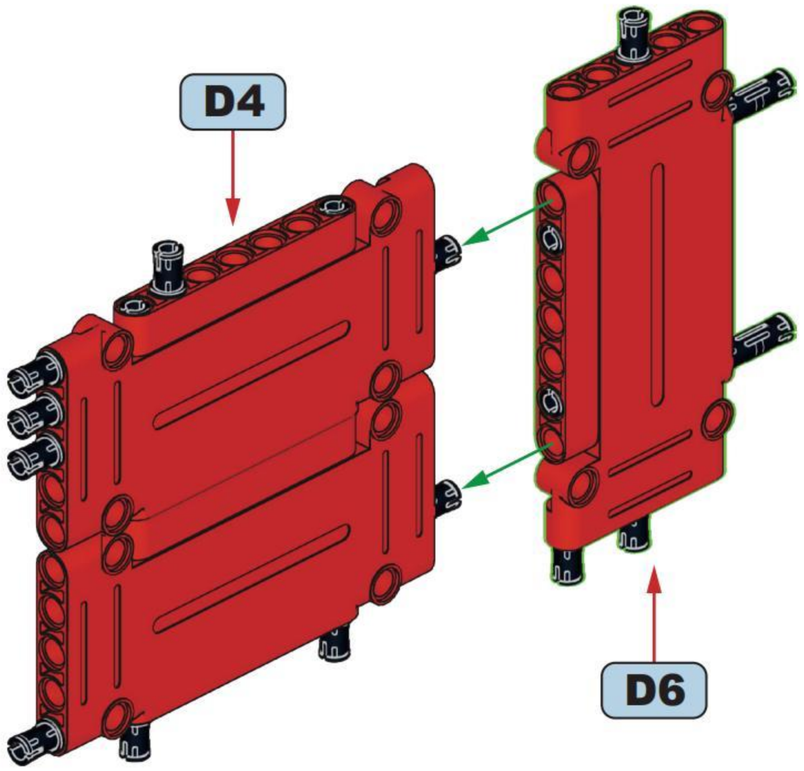


## D7

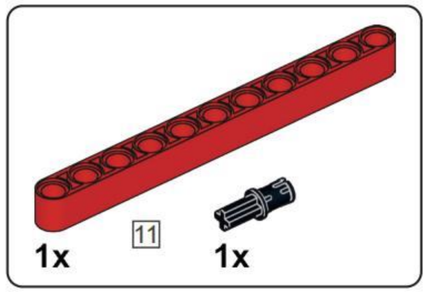


## D8

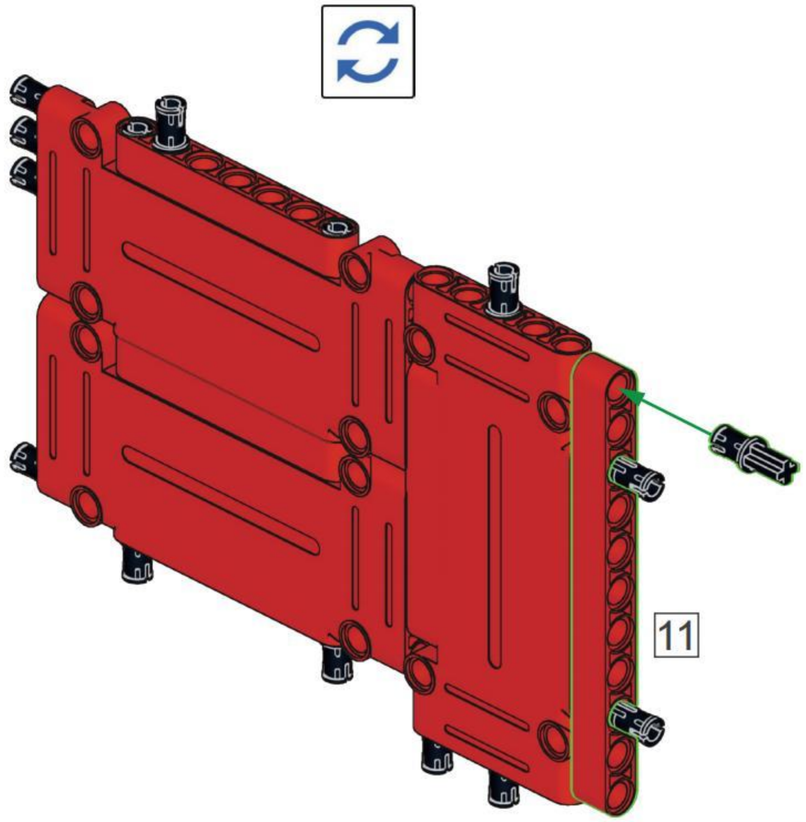

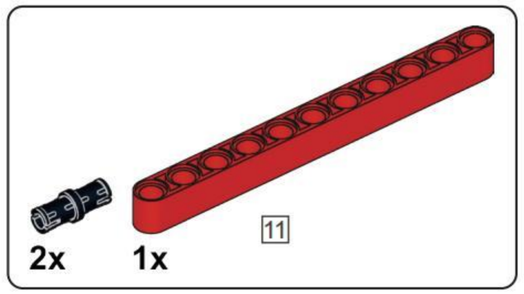


## D9

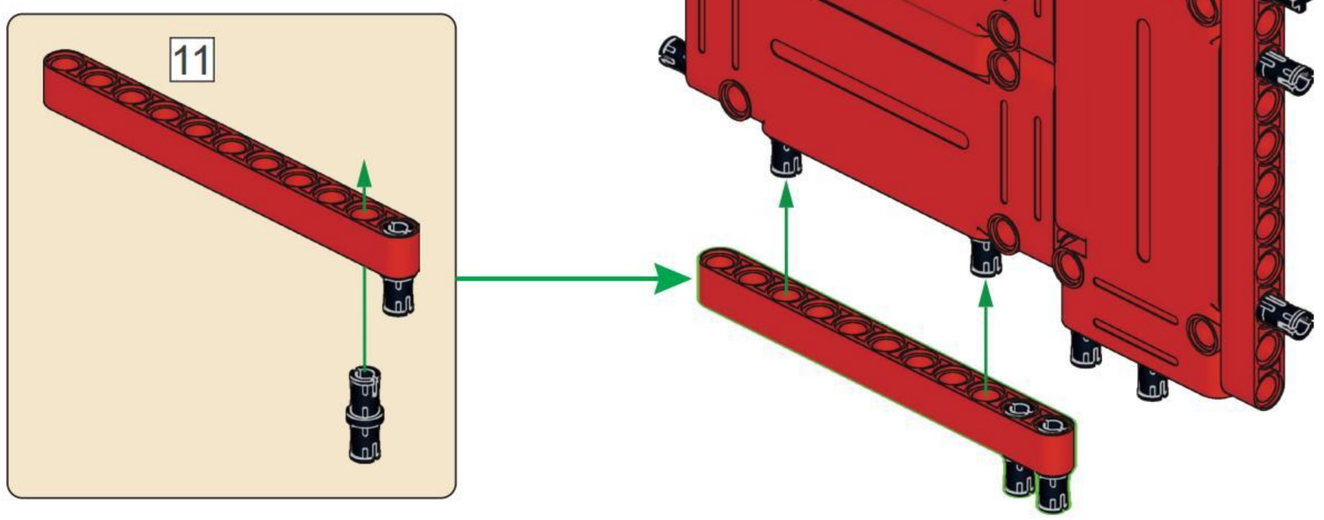


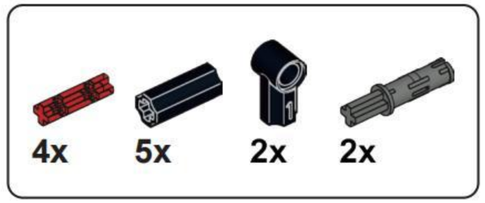


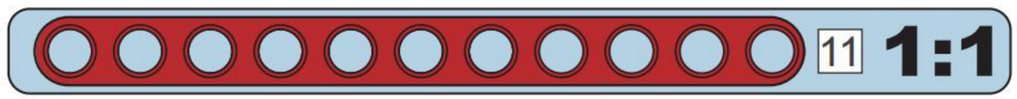


## D10

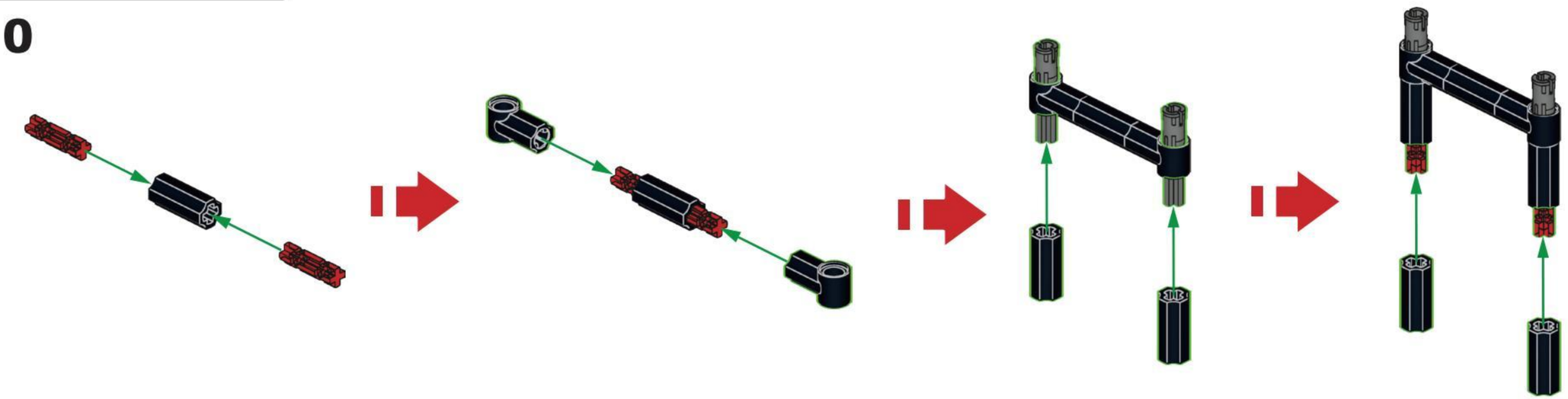

## D11

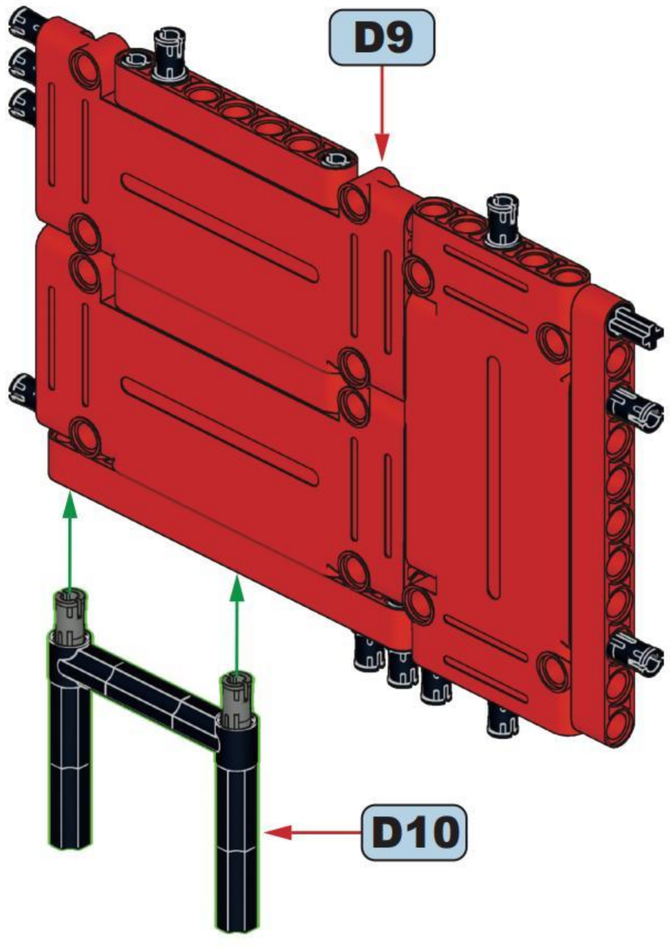


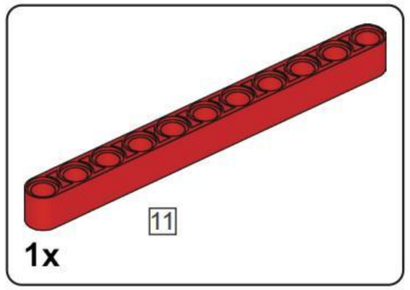


## D12

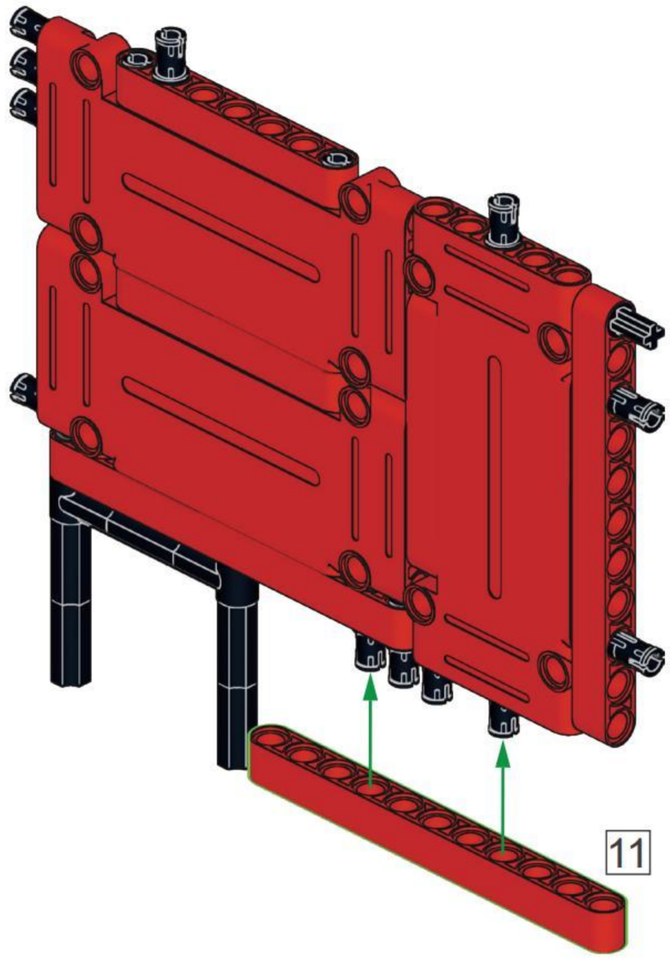


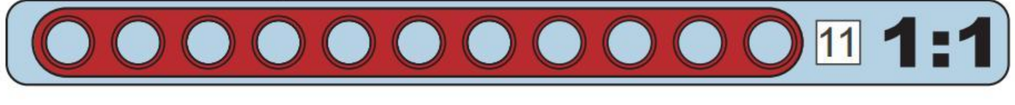


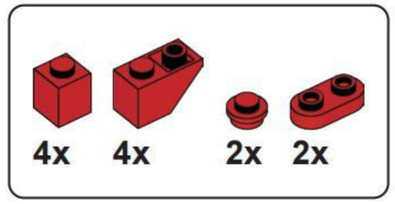


## D13

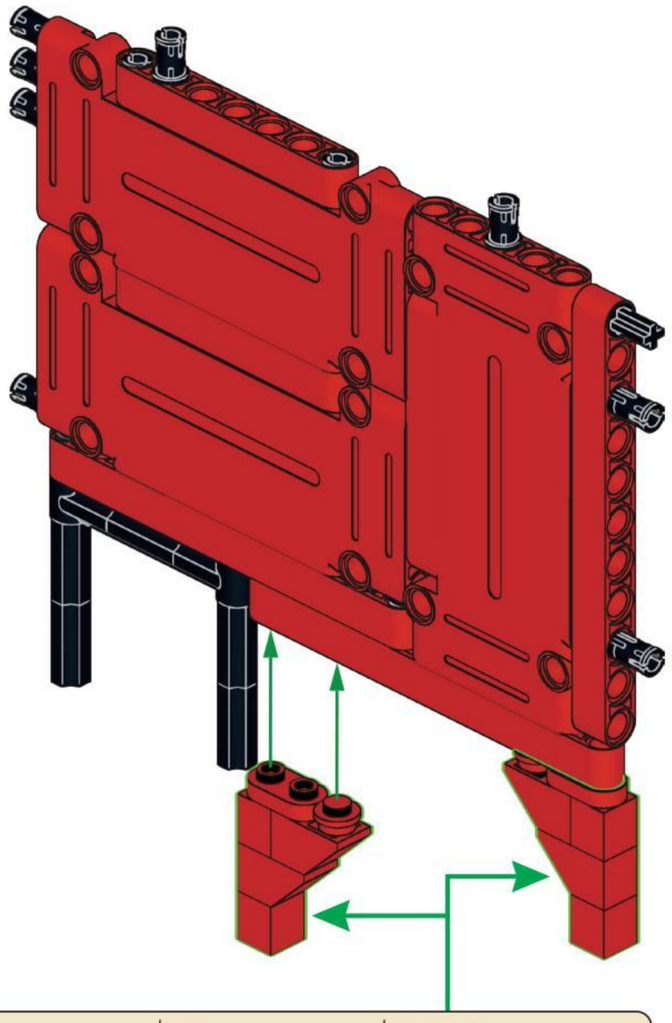

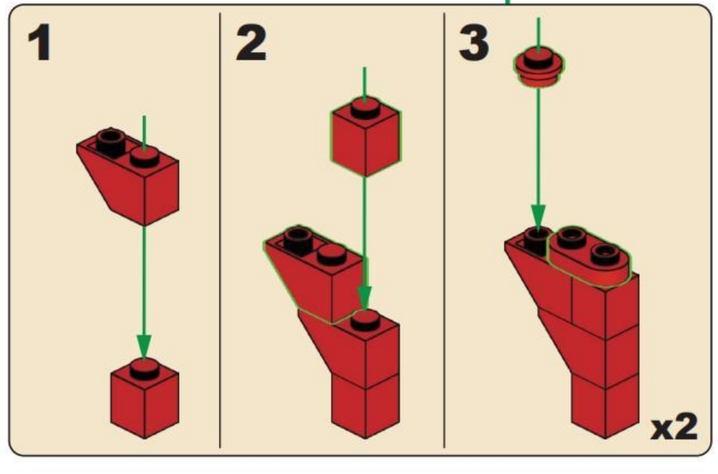

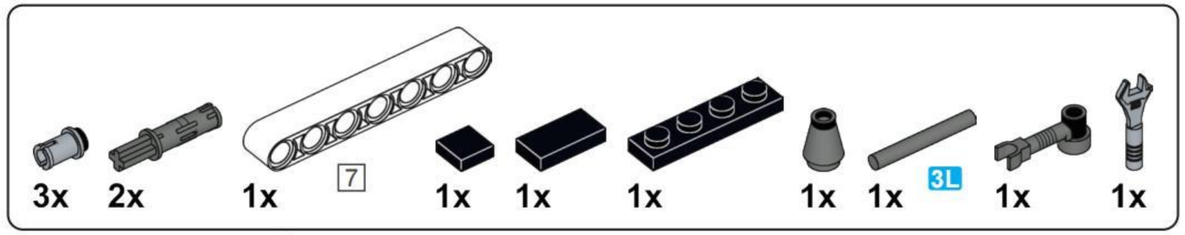


## D14

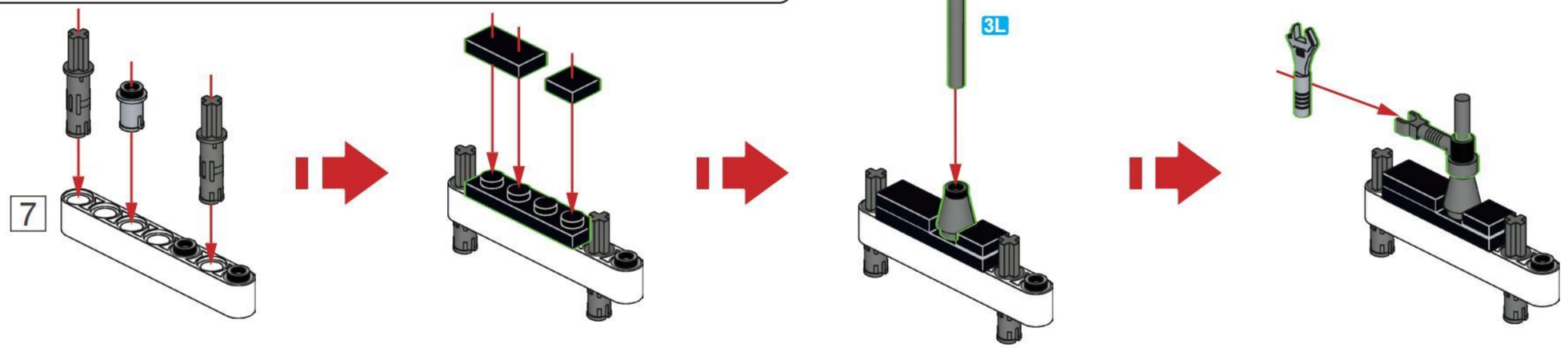


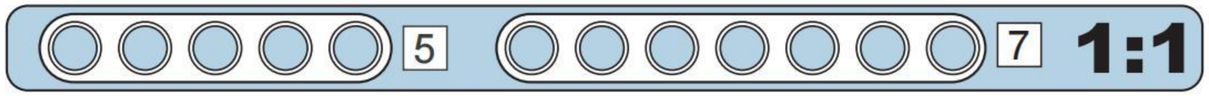


## D15

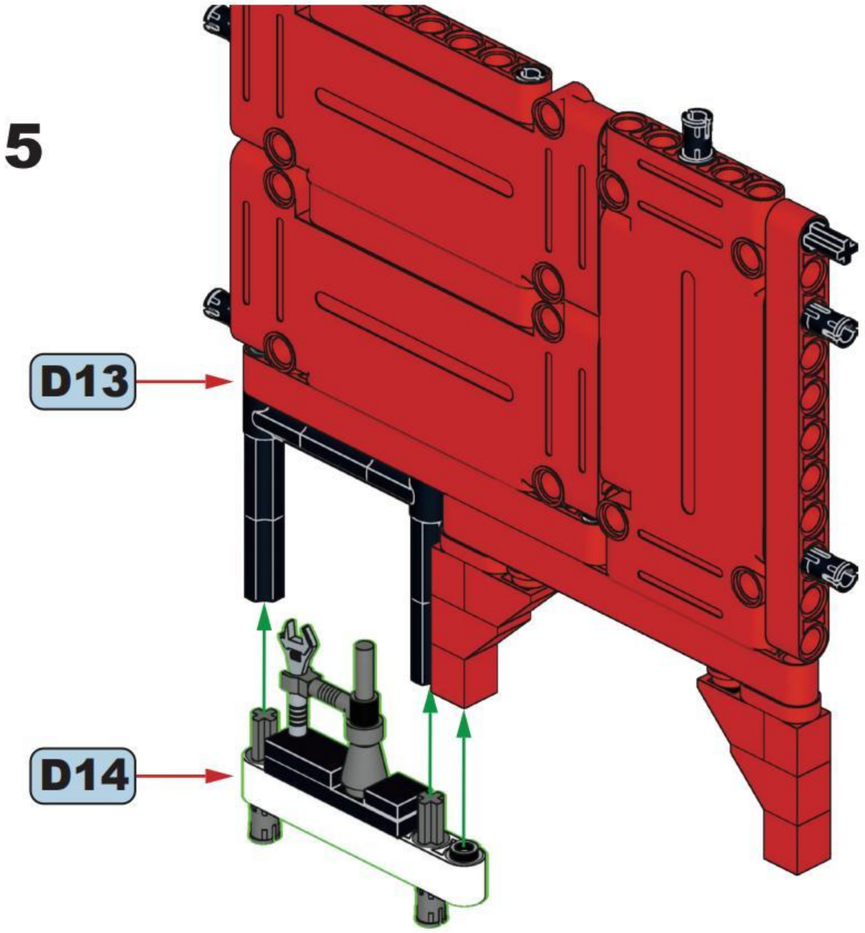


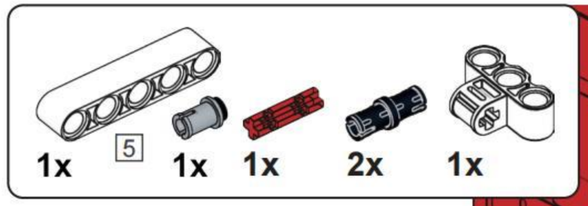


## D16

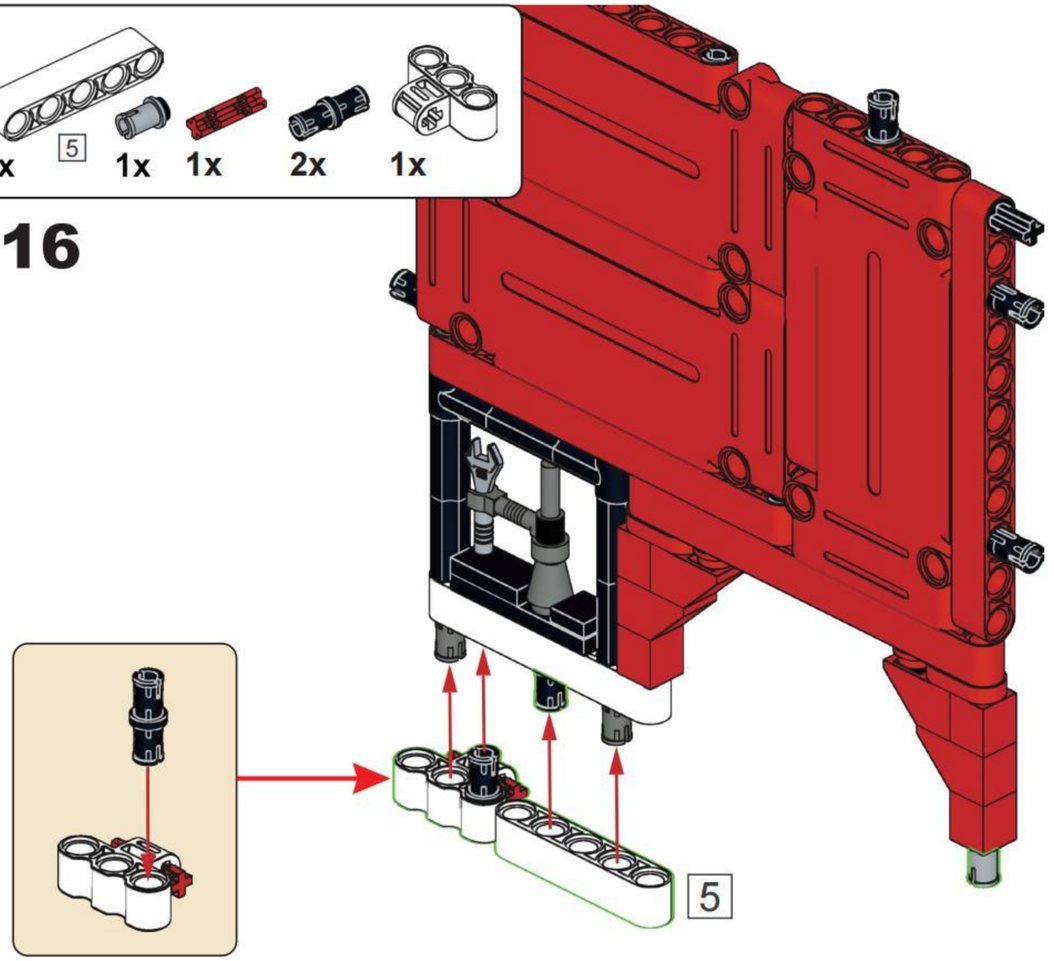

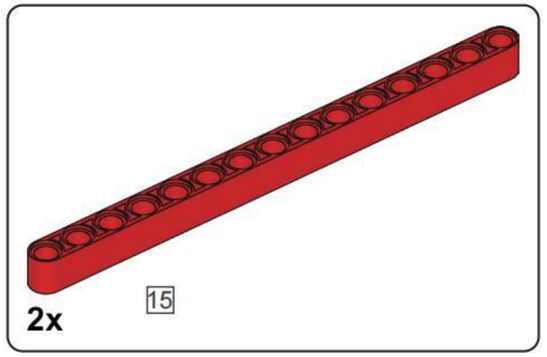


## D17

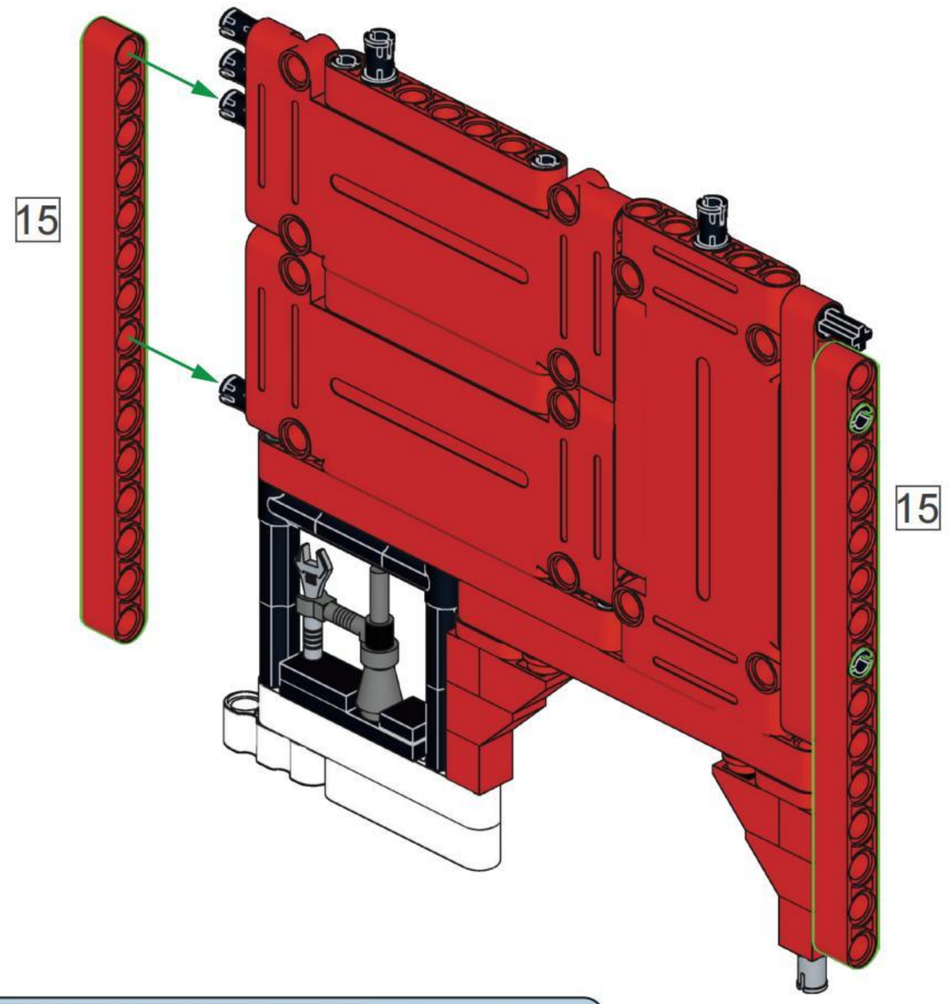


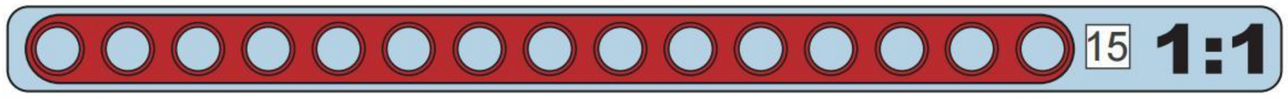


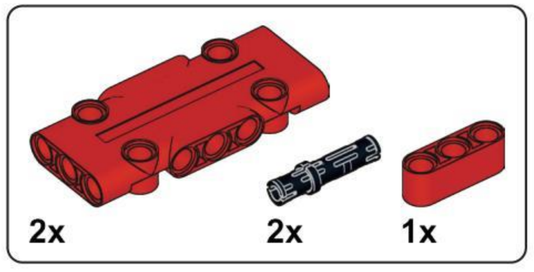


## D18

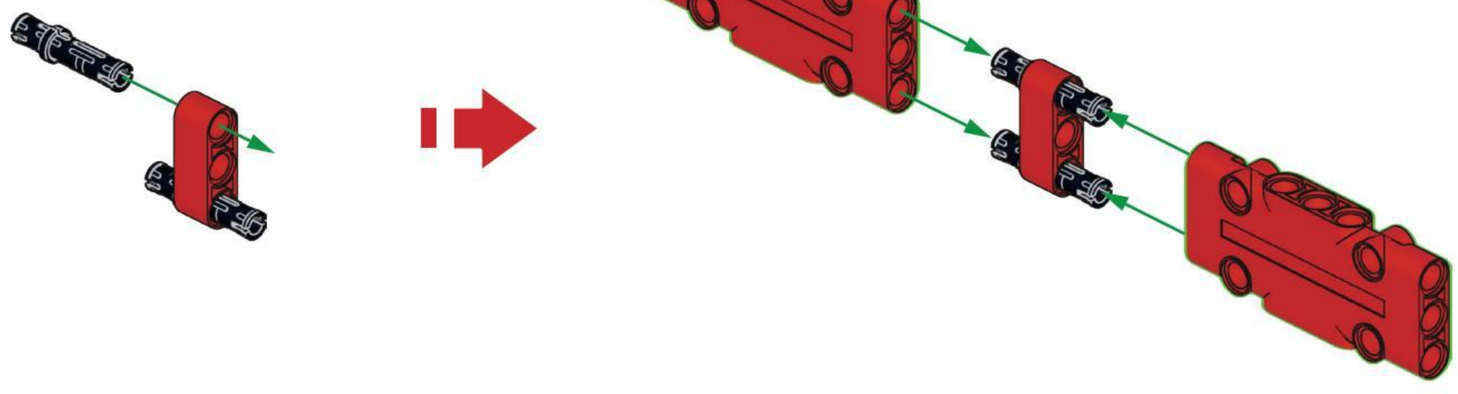

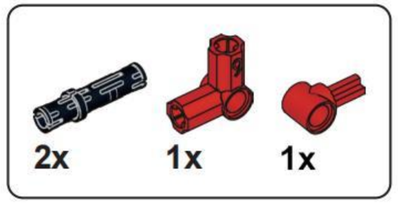


# D19

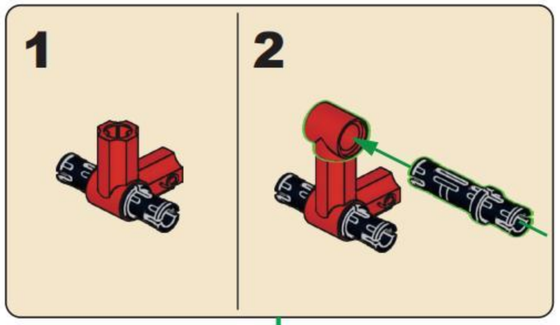


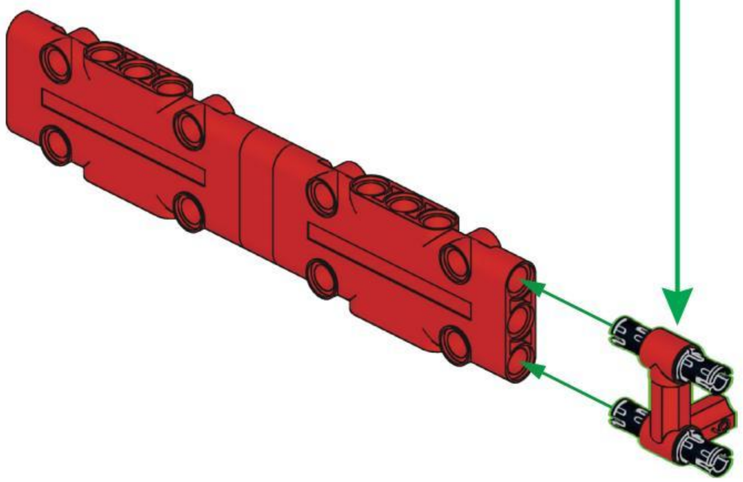

# D20

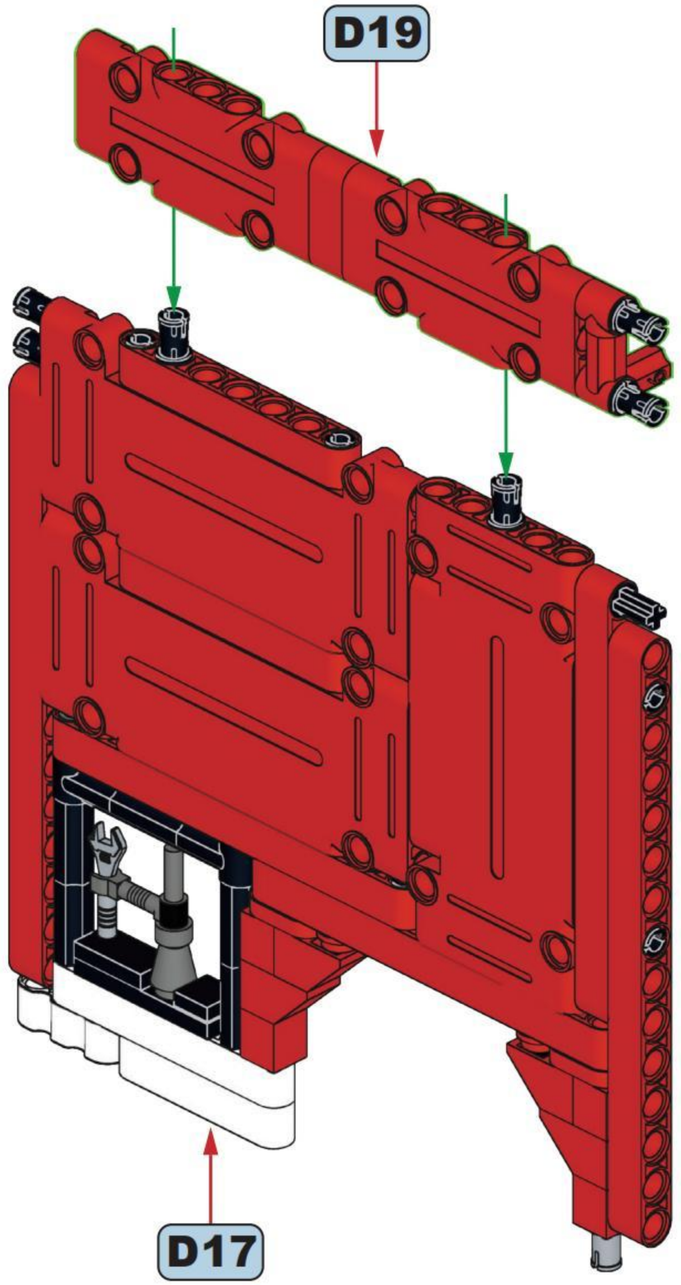

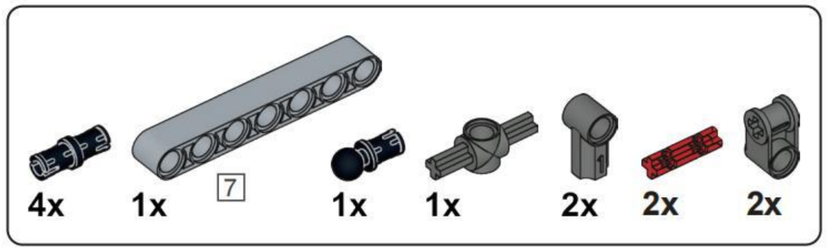


## D21

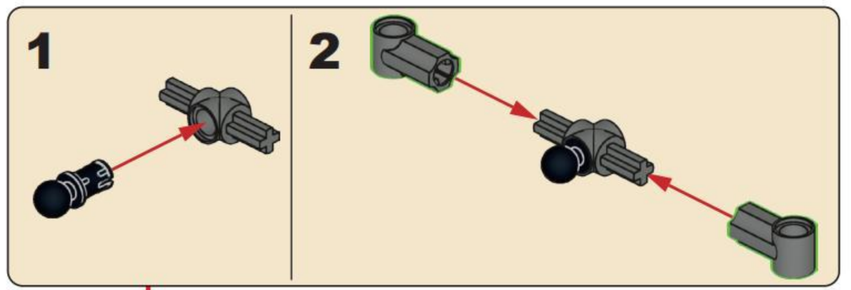


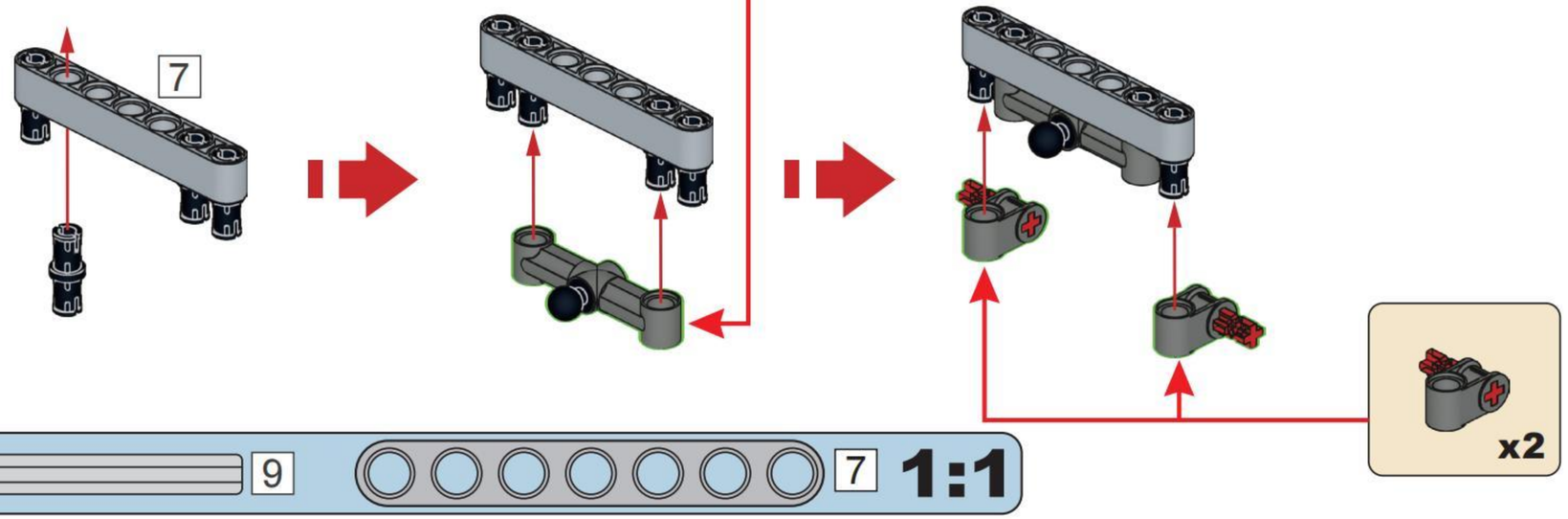


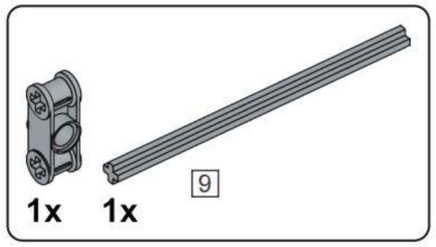


## D22

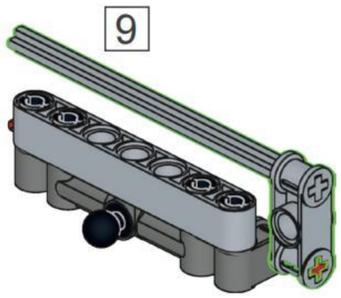


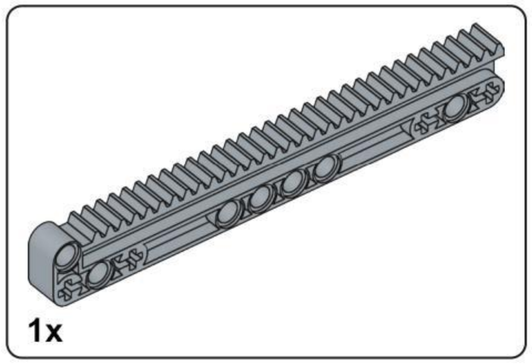


## D23

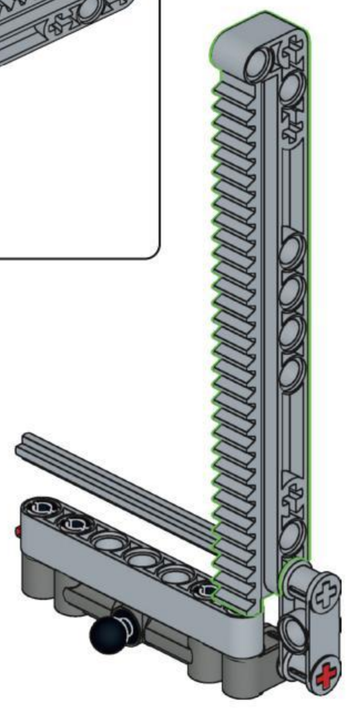

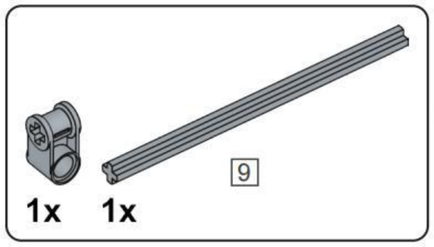


## D24

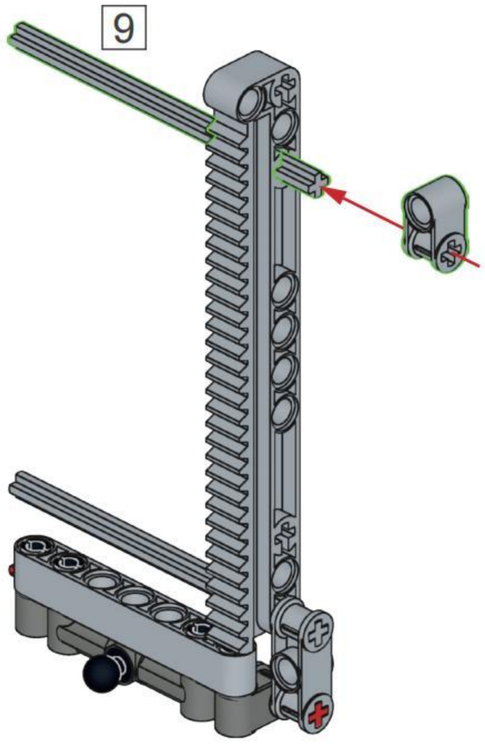

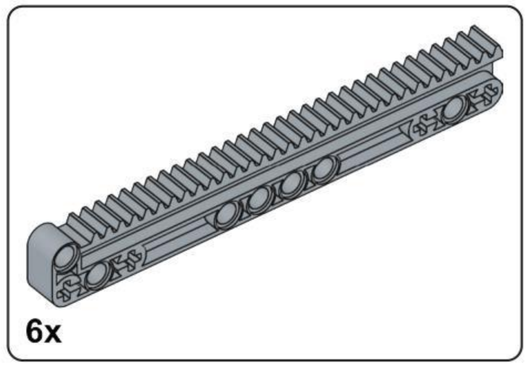


## D25

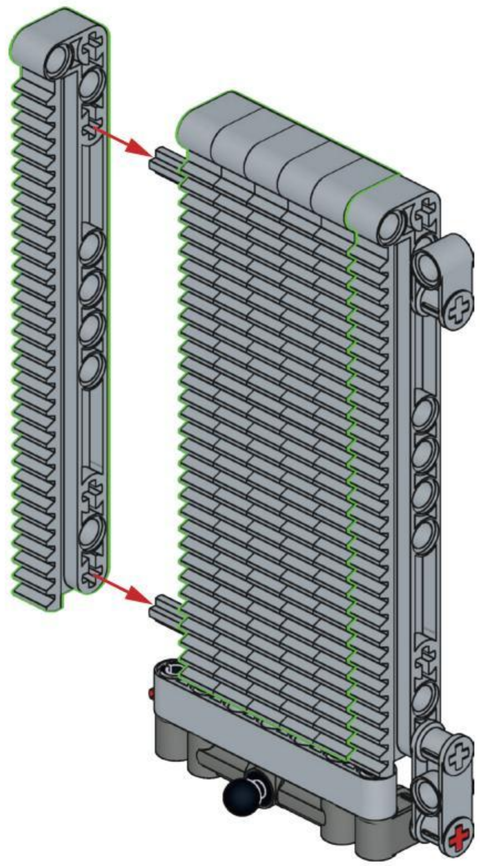

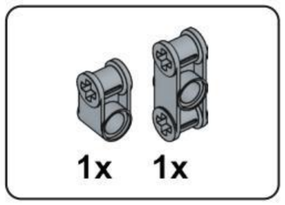


## D26

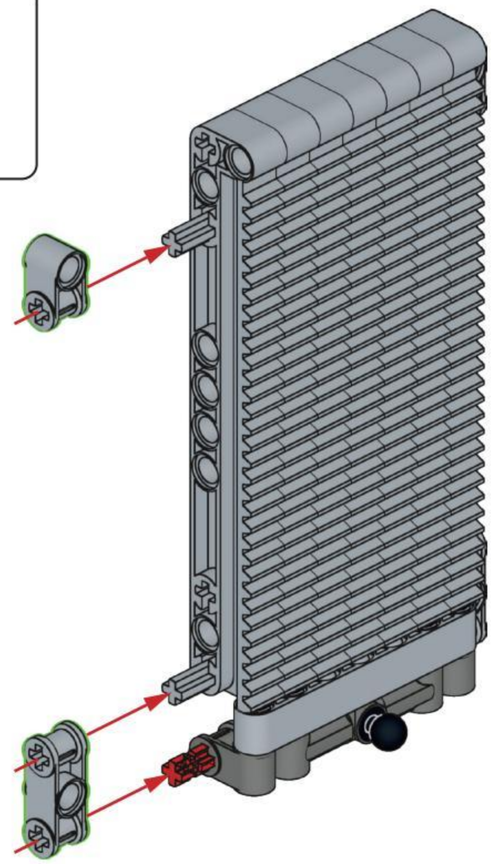

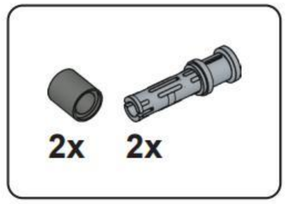


## D27

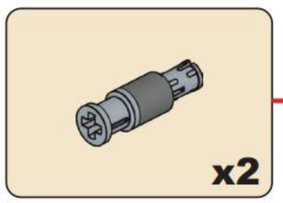


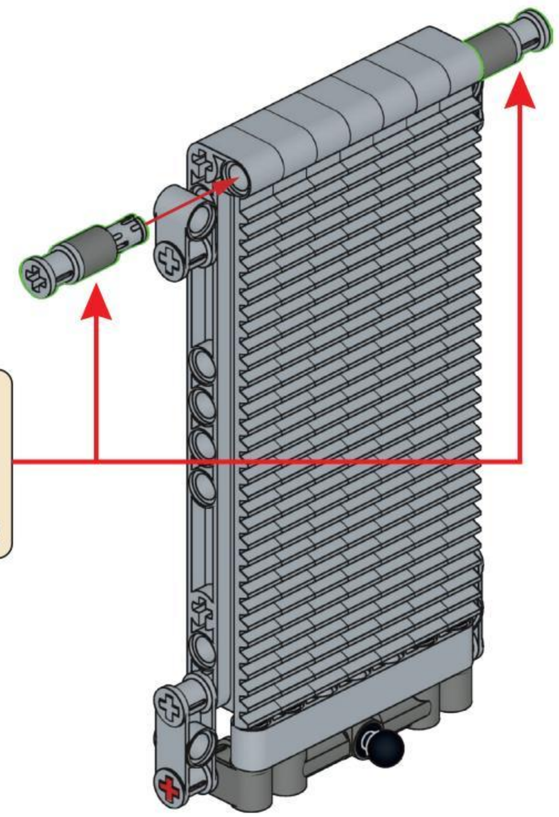

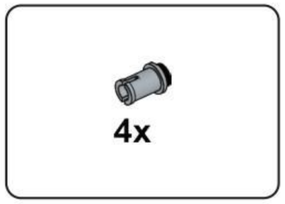


## D28

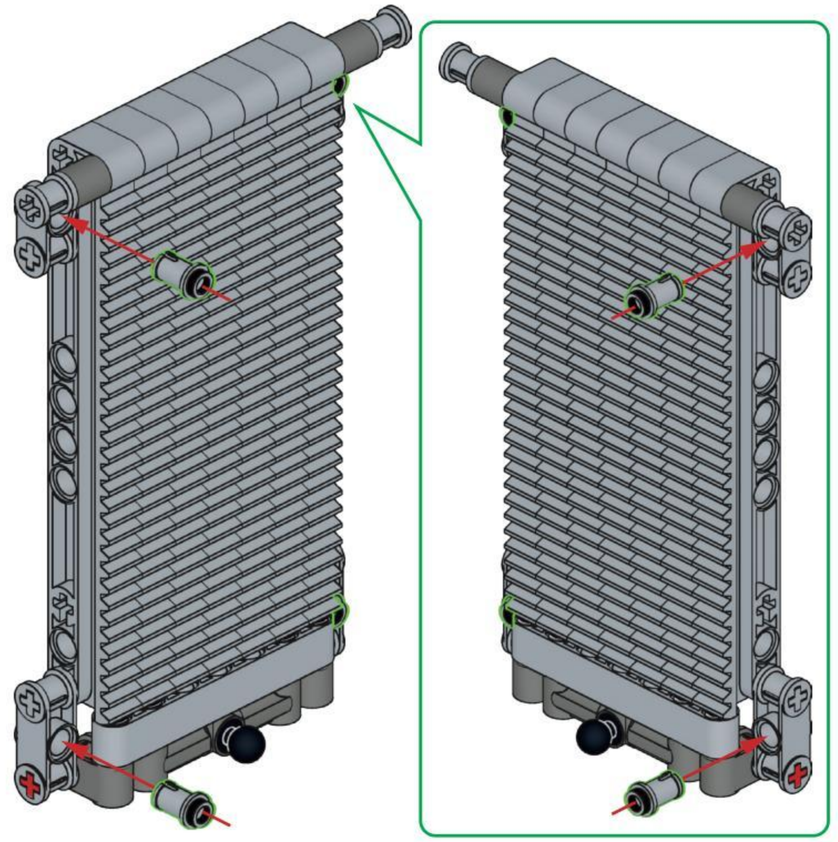

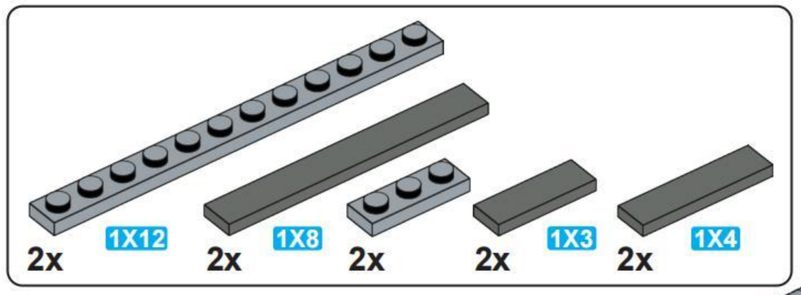


## D29

## D30

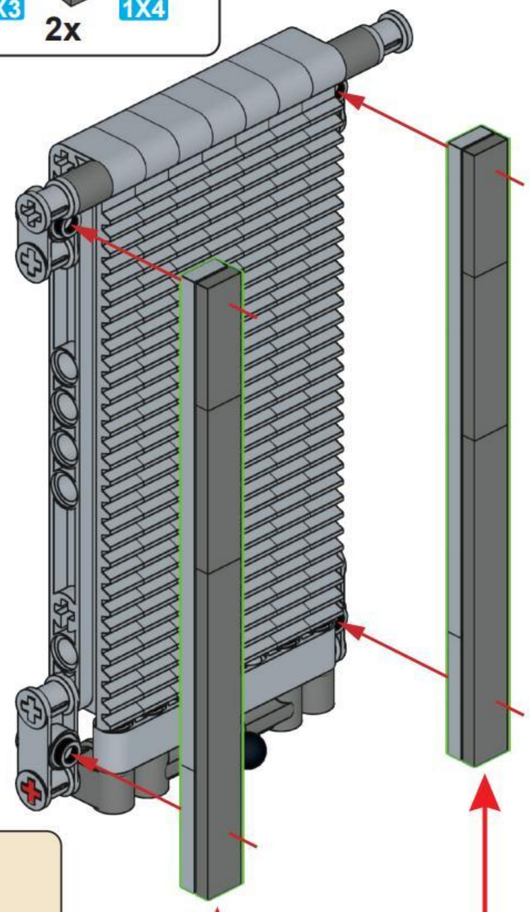

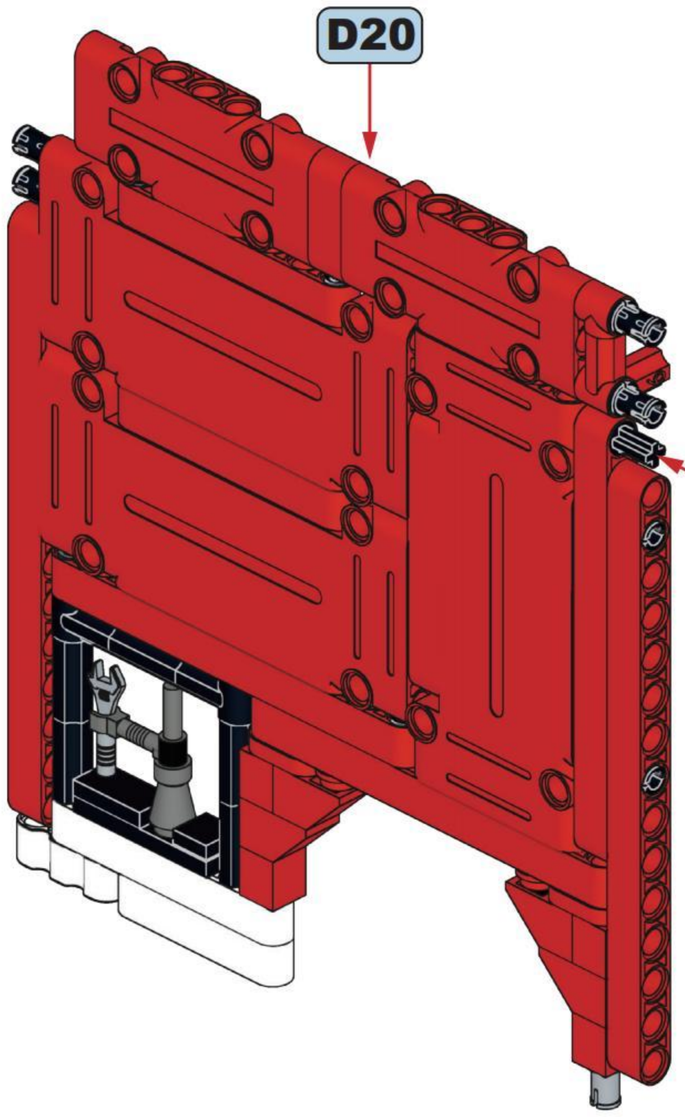


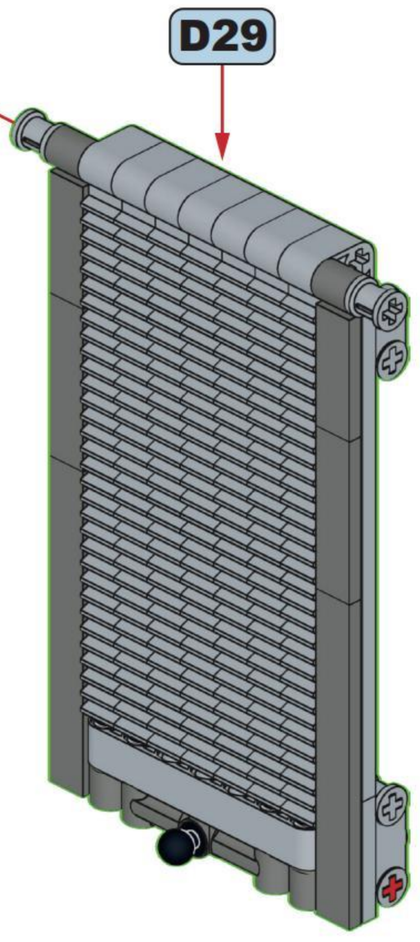


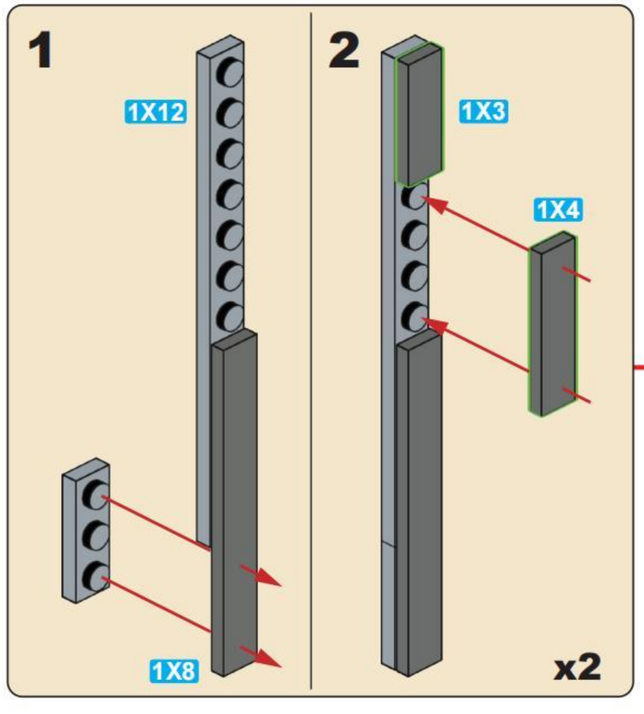

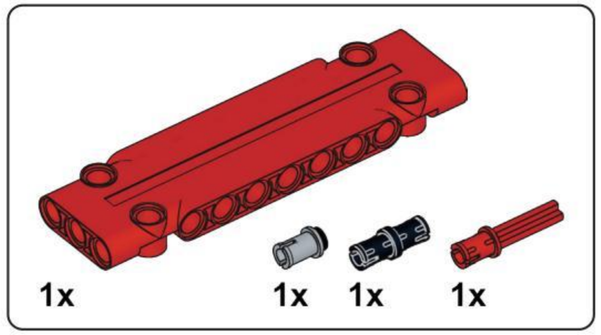


D31

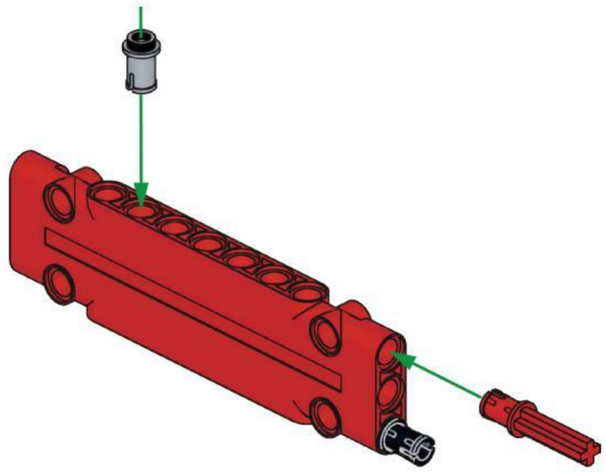

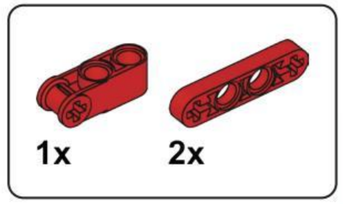


D32

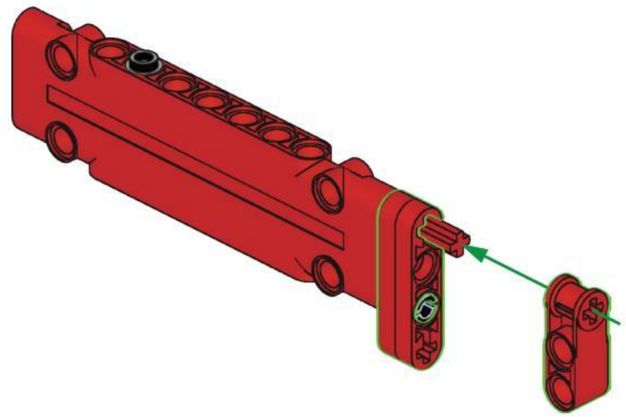

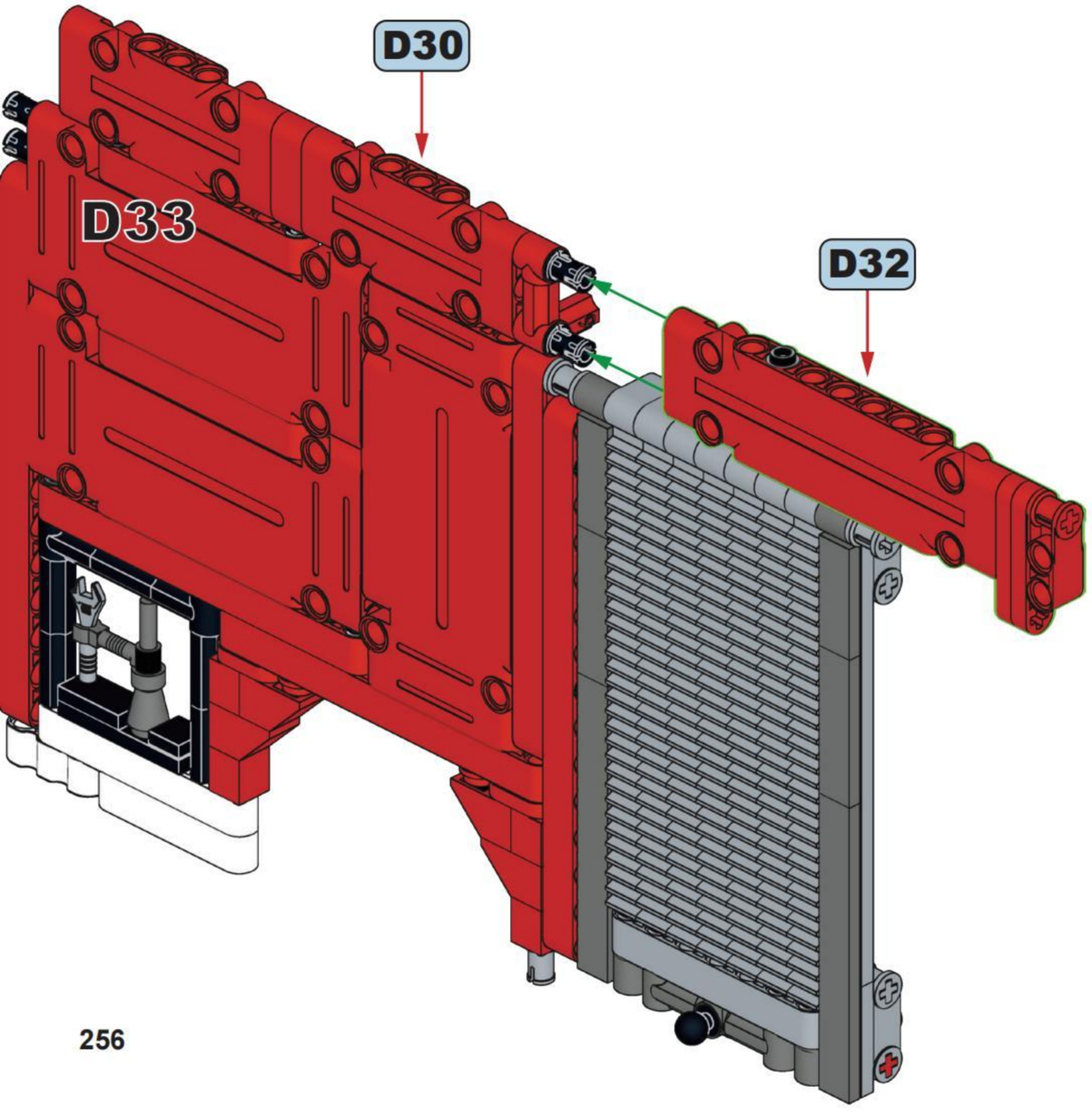


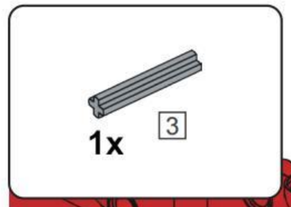


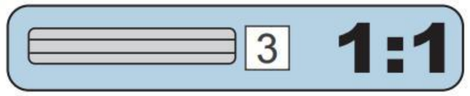


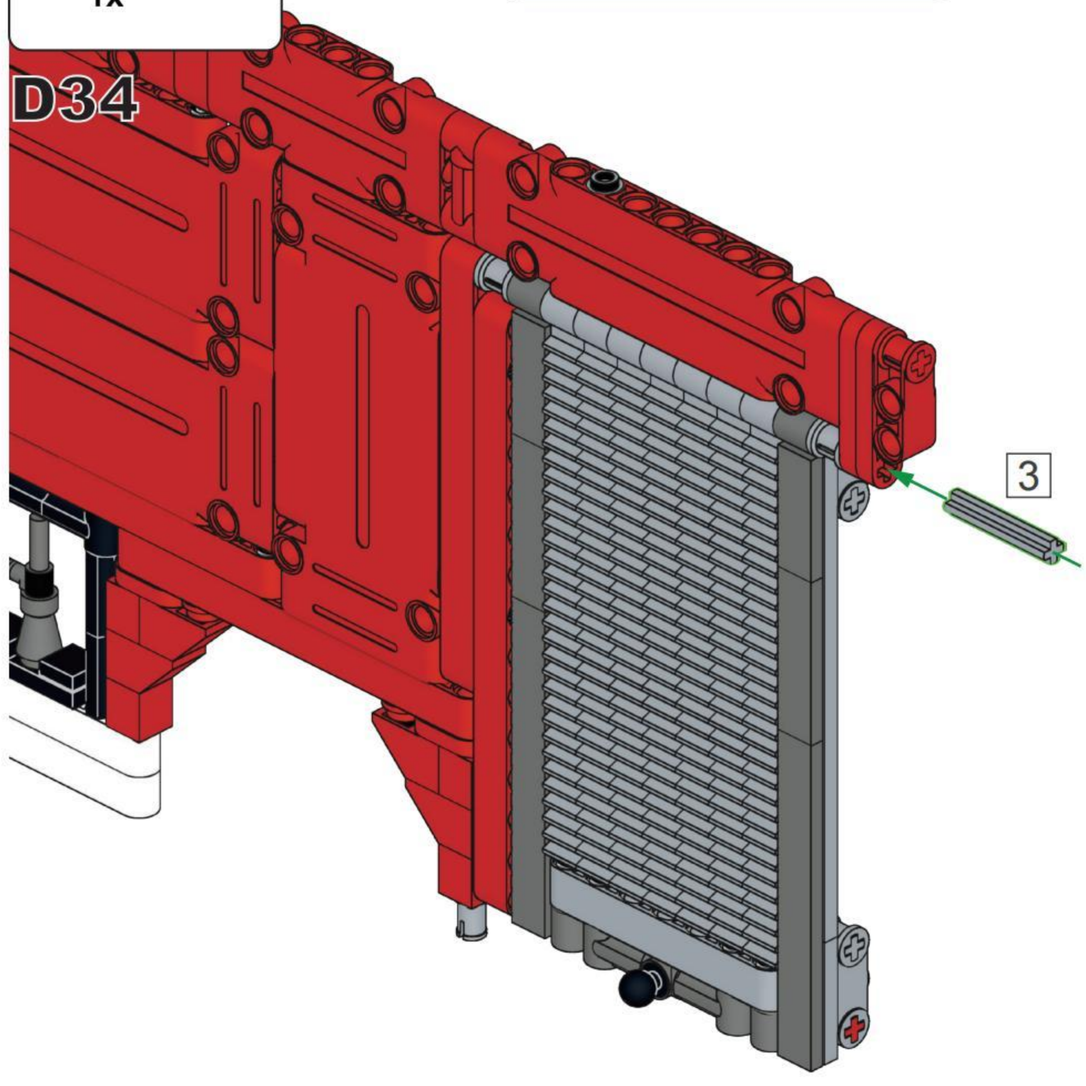

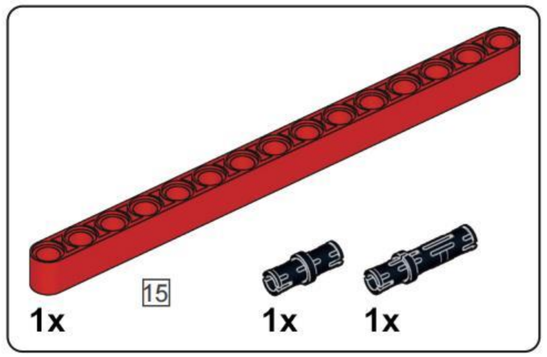


## D35

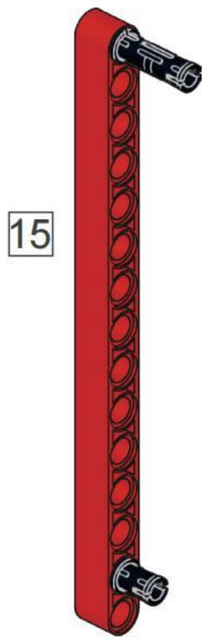


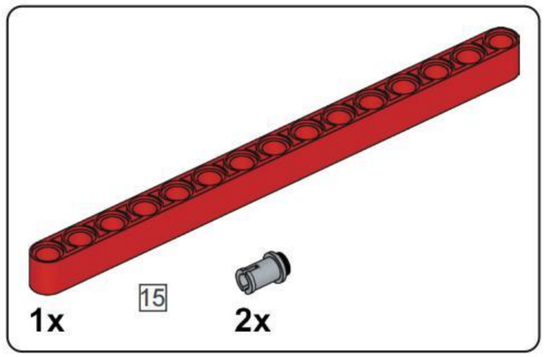


## D36

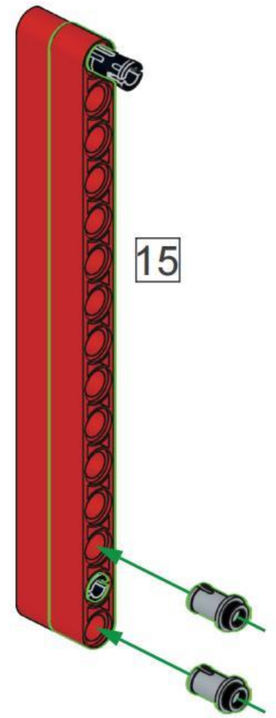


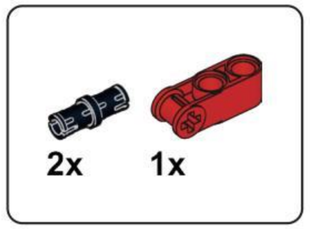


## D37

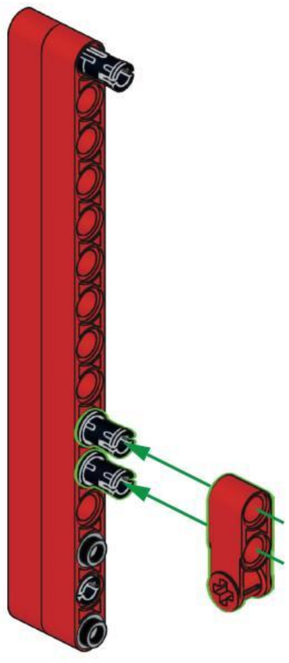

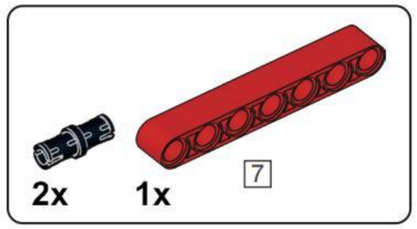


## D38

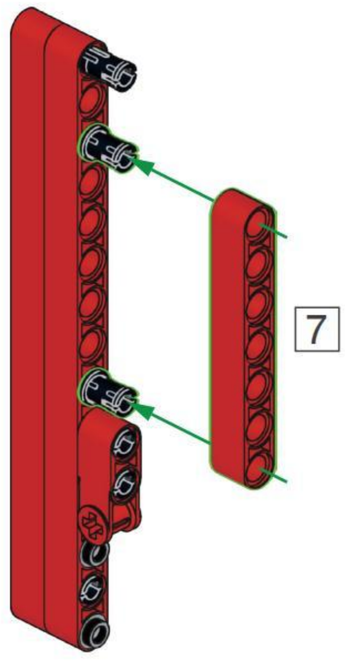


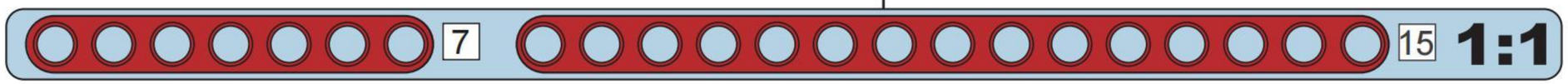

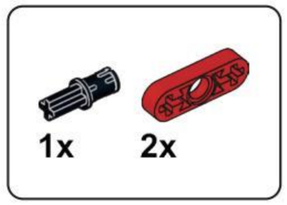


## D39

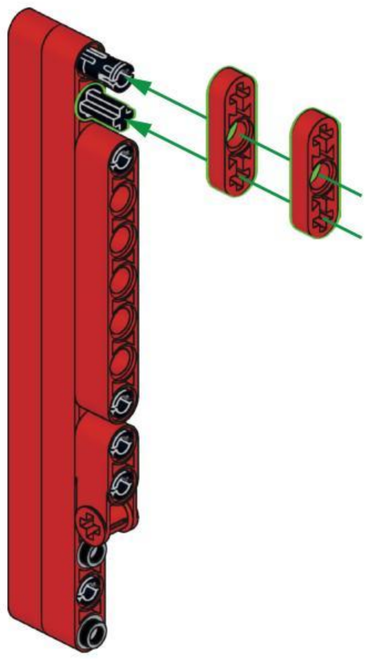

## D40

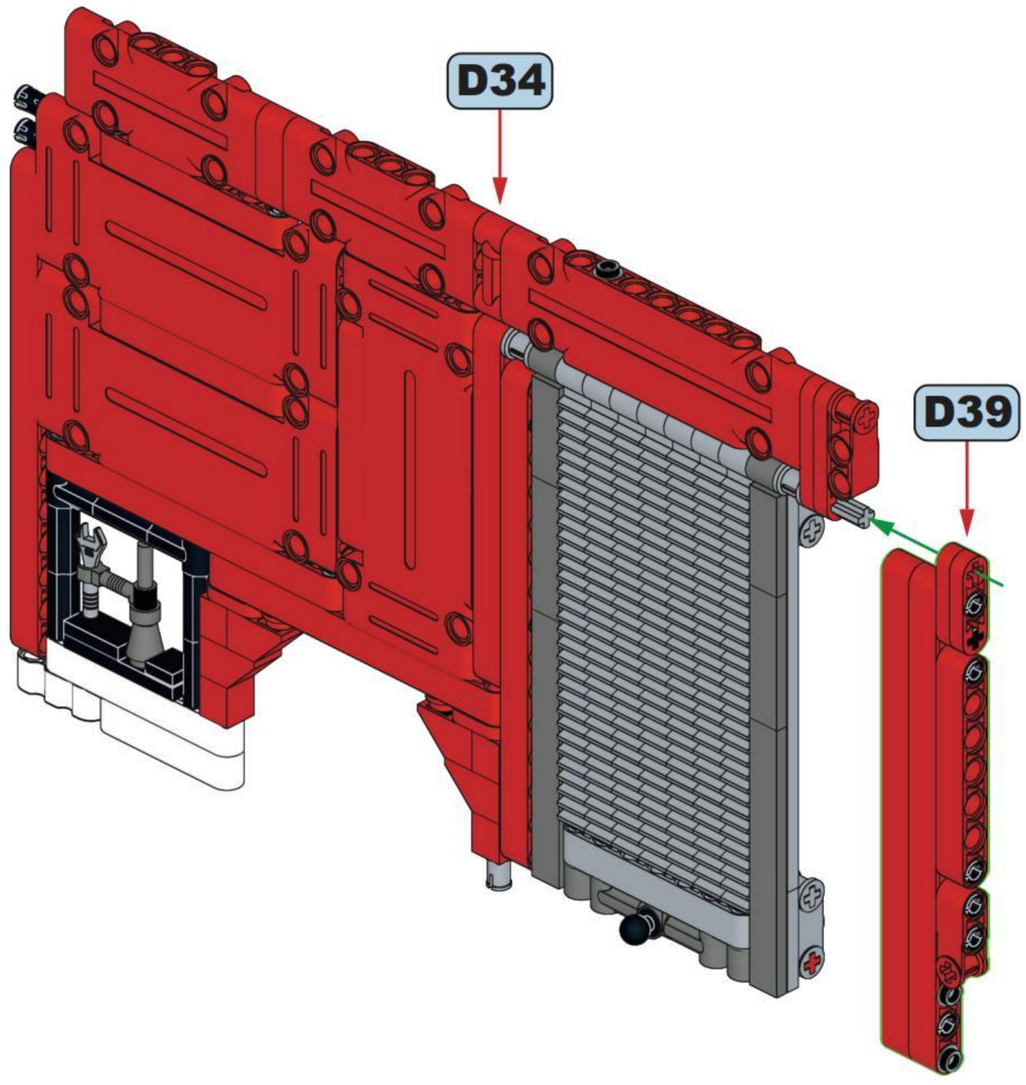

# D41

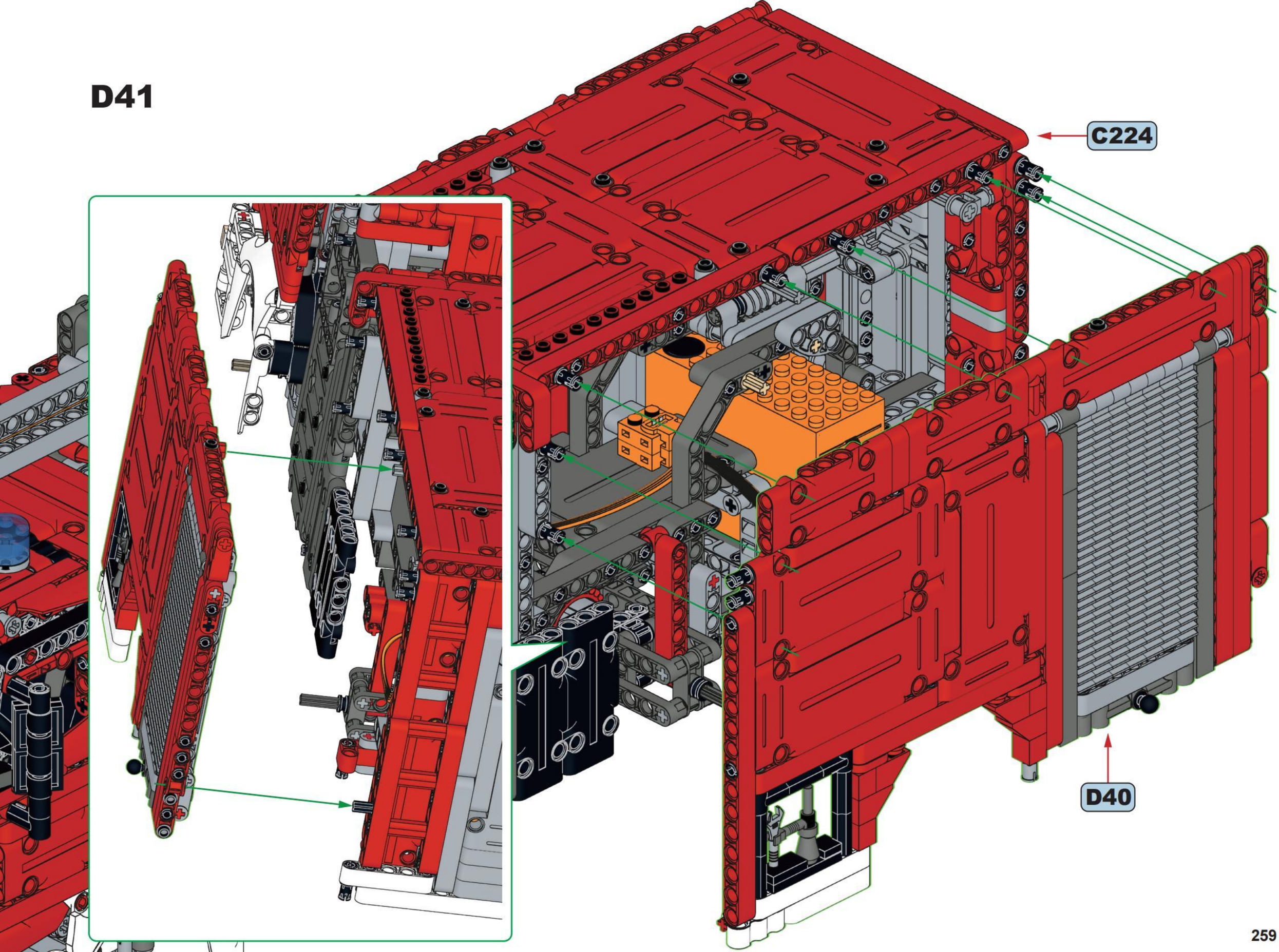

4x

**D42**

## D43

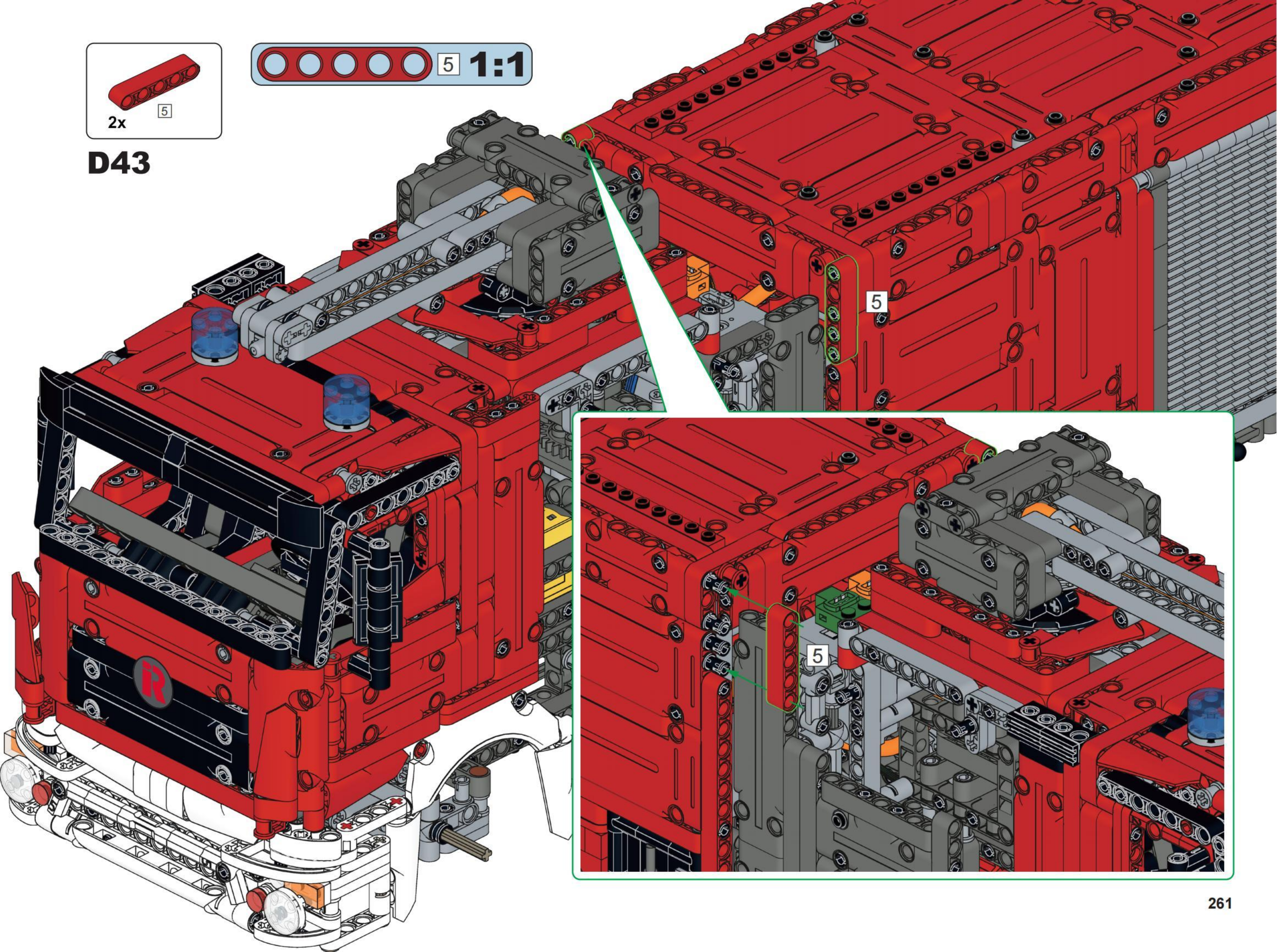

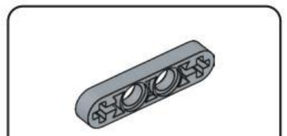


# D44

# D45

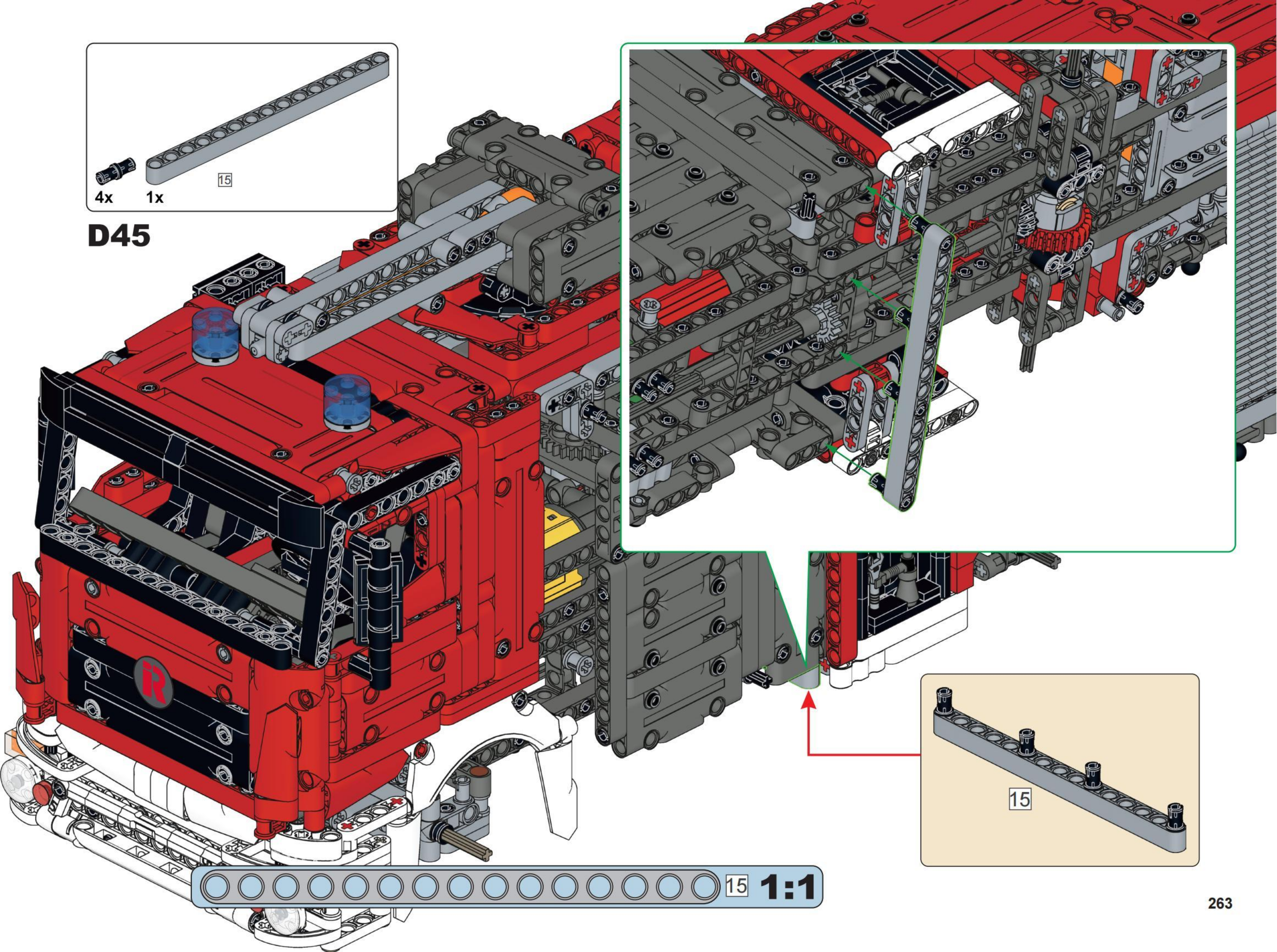




15 **1:1**

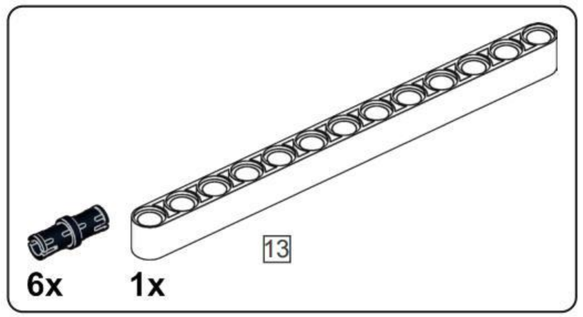


## D46

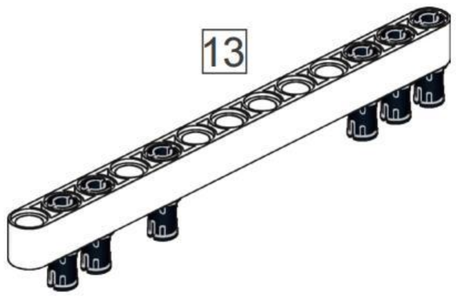


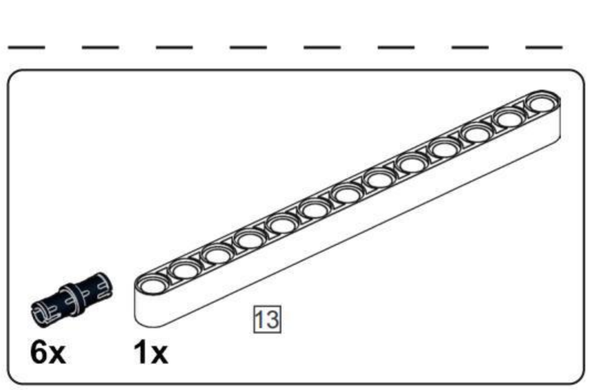


## D48

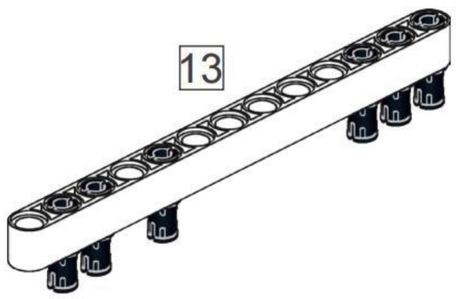


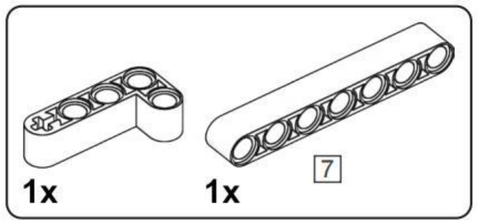


## D47

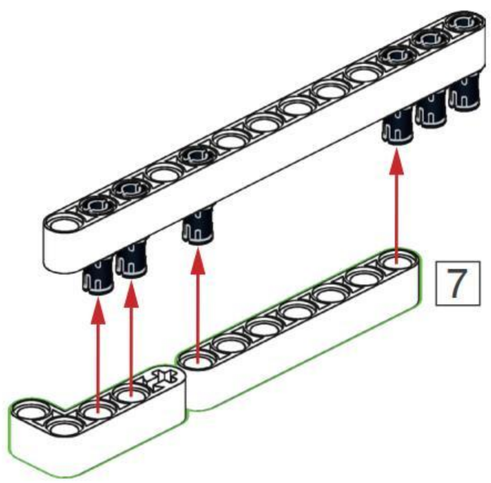


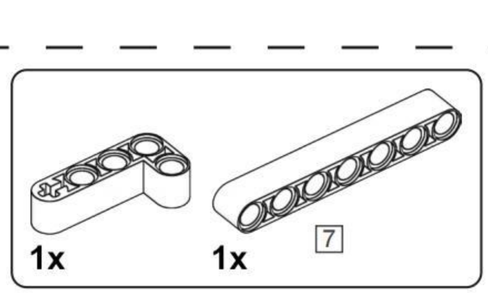


## D49

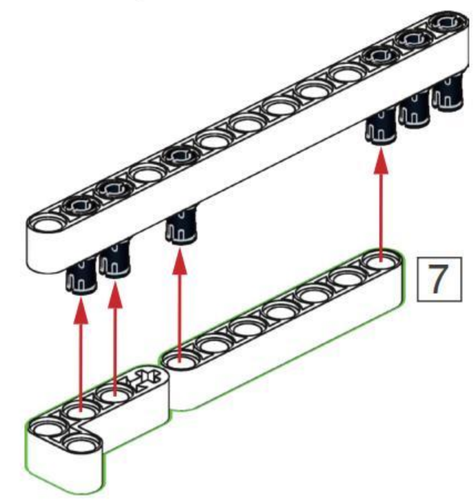


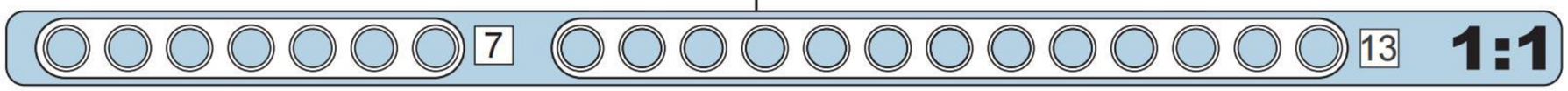

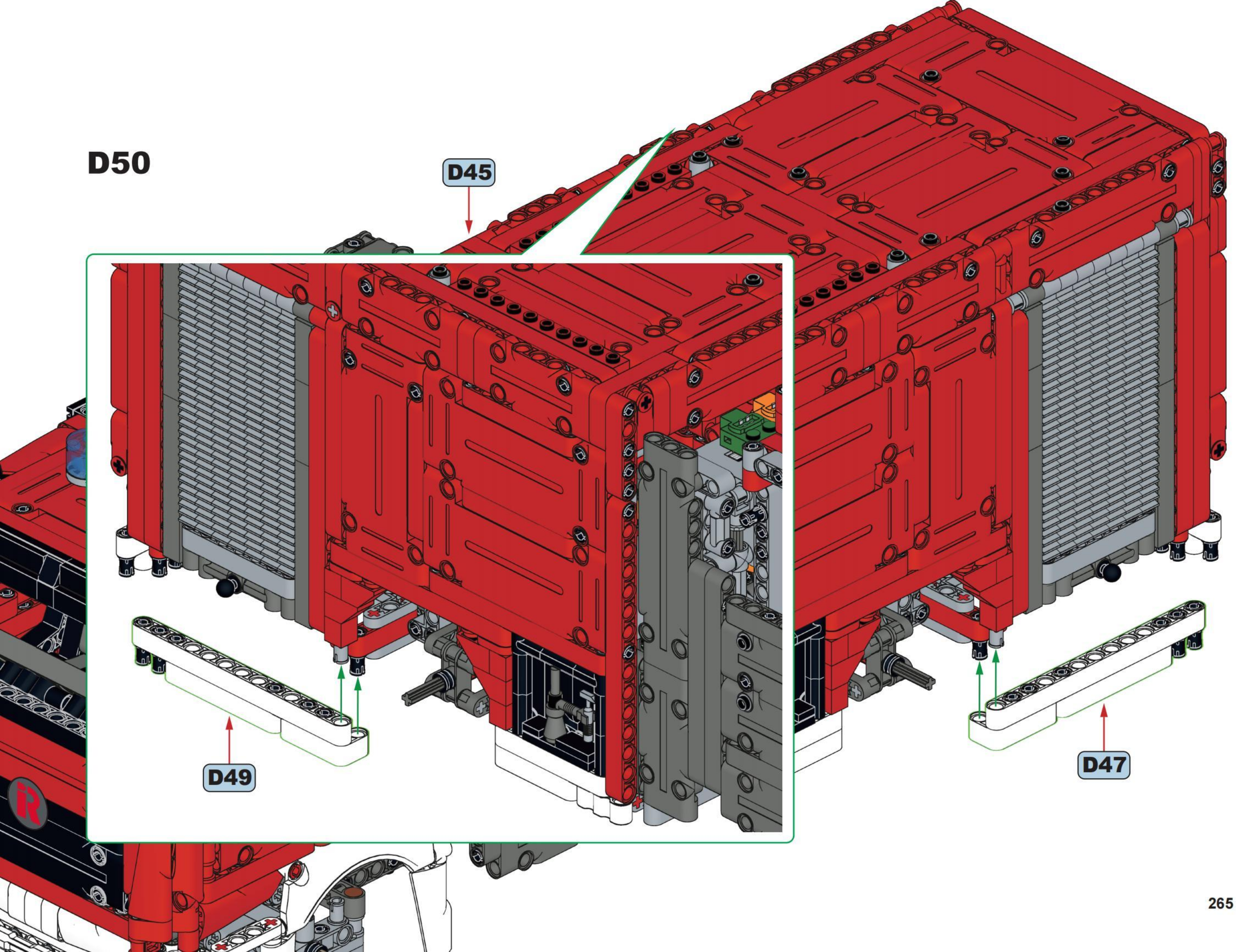
D50
D45
D49
D47

D51

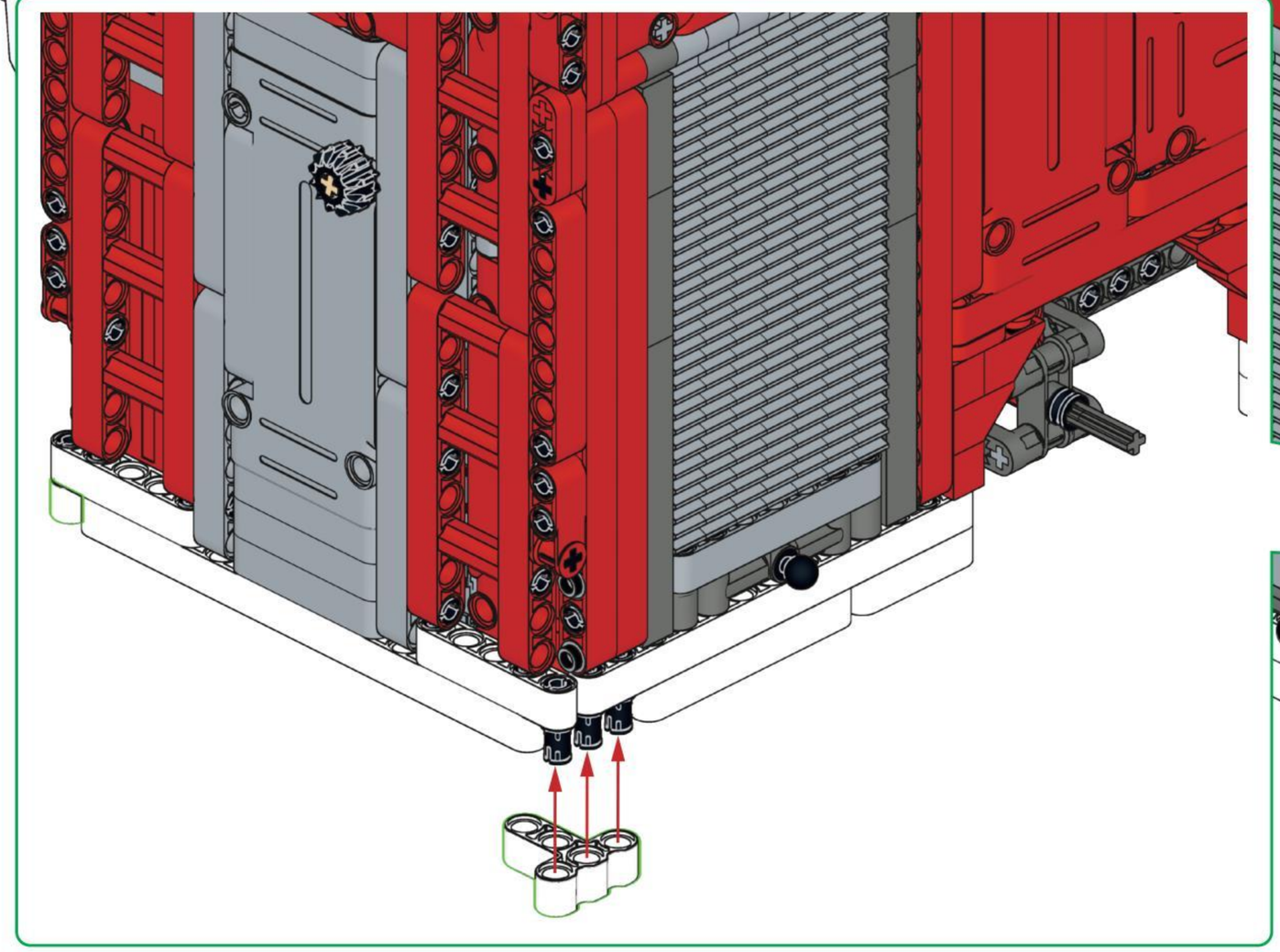

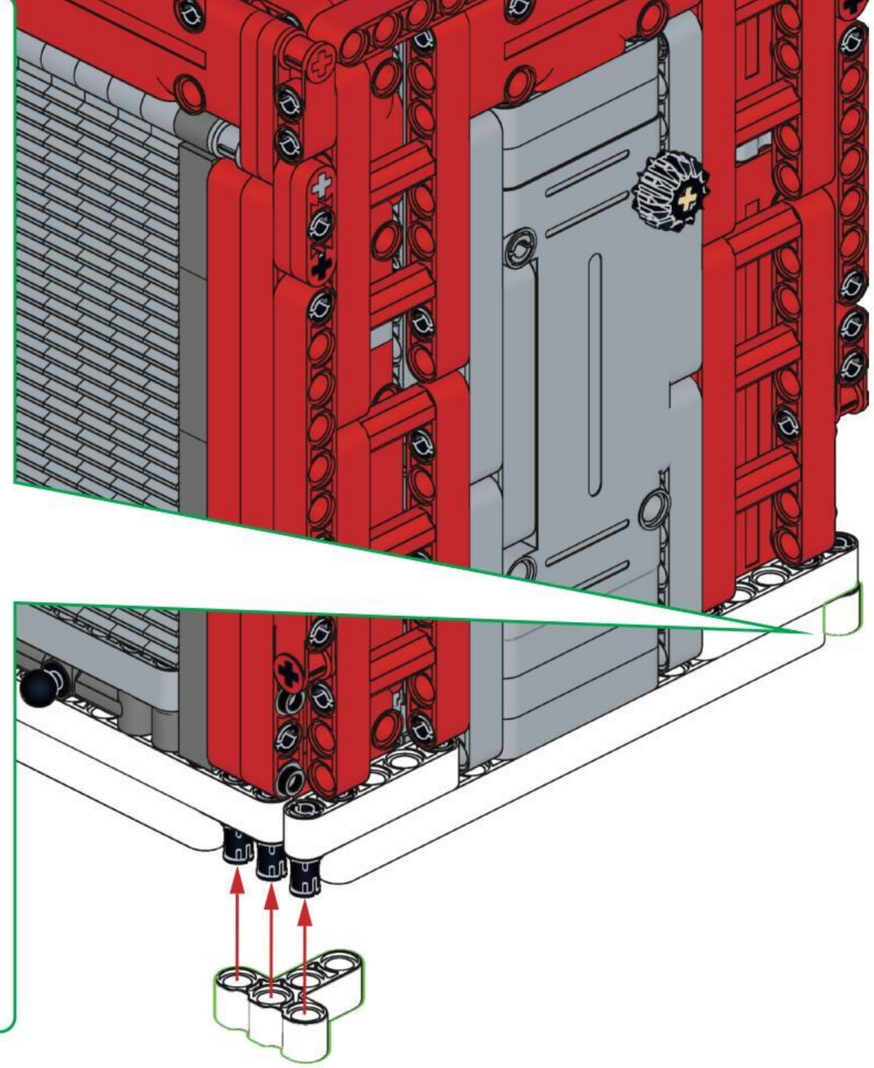

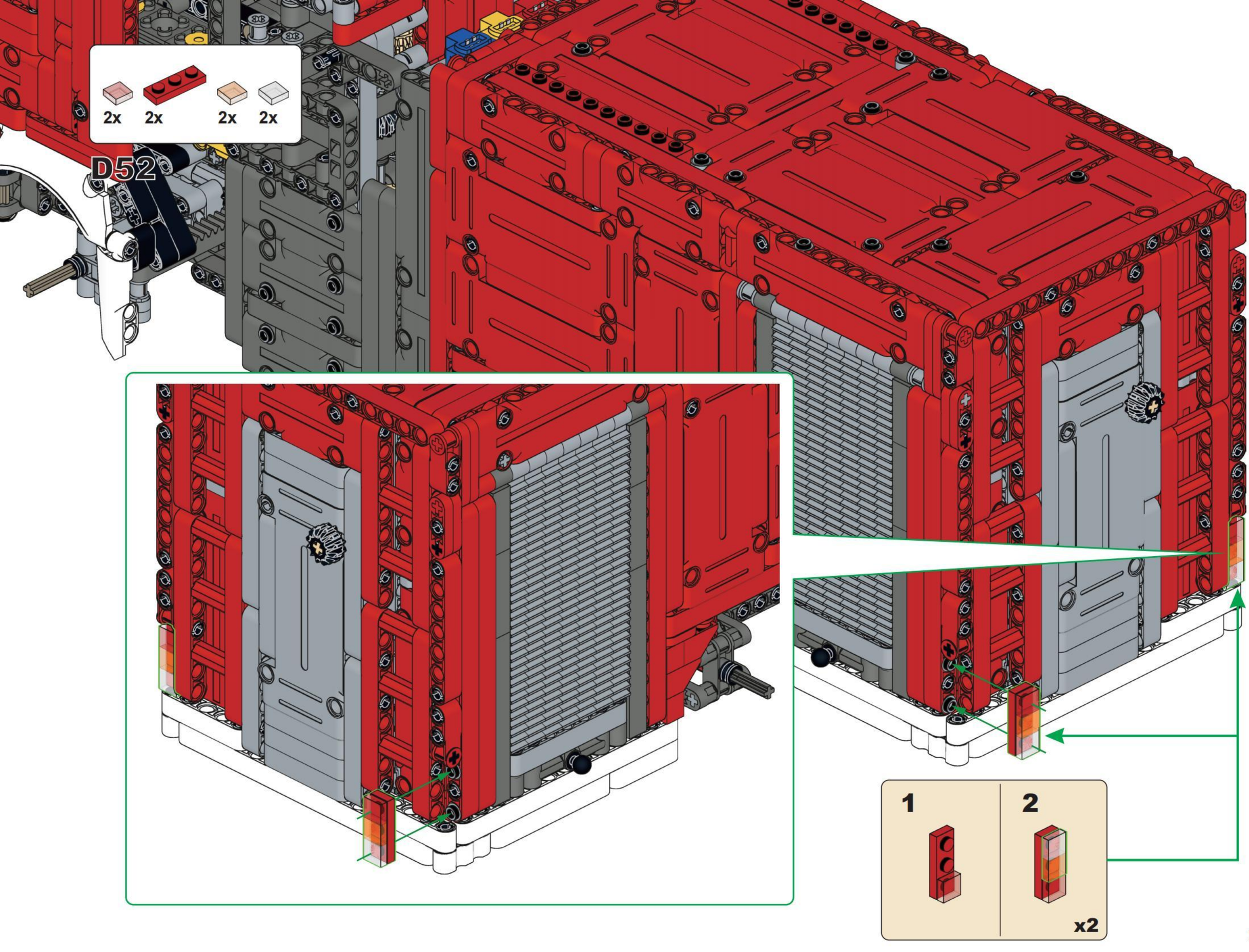
2x
2x
2x
2x
D52
1
2
x2

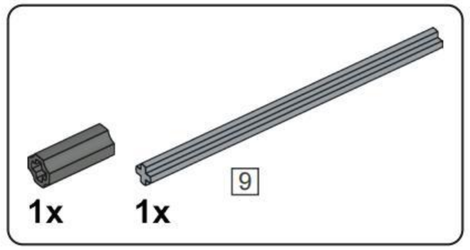


## D53

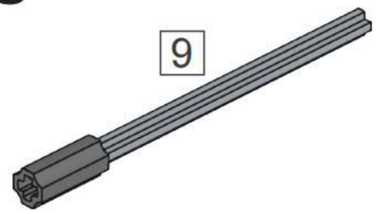


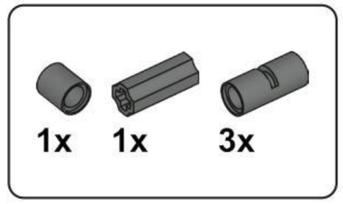


## D54

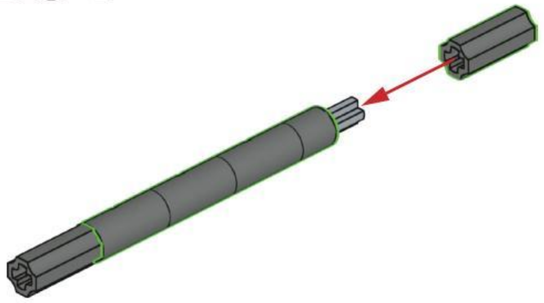

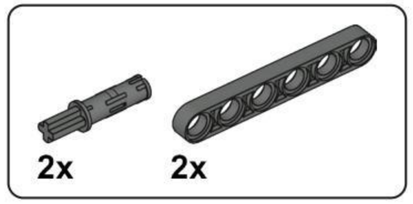


## D55

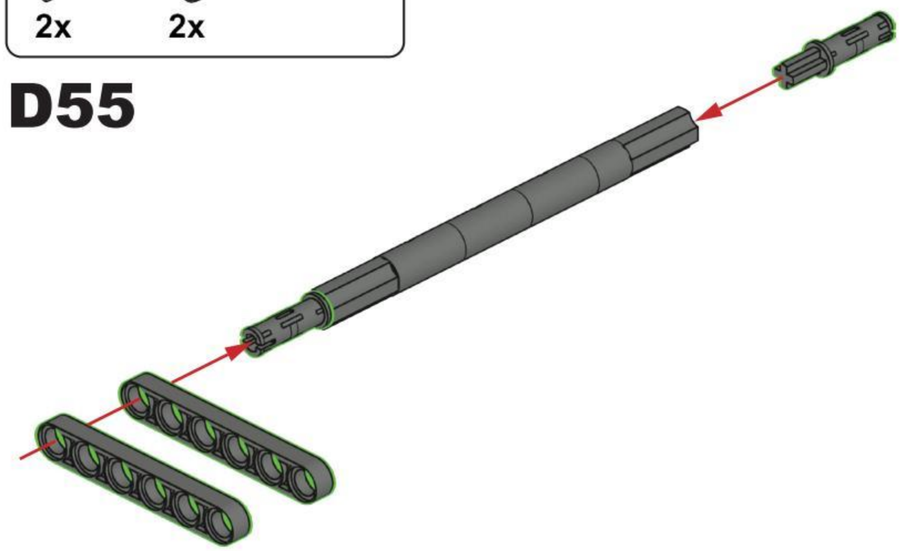

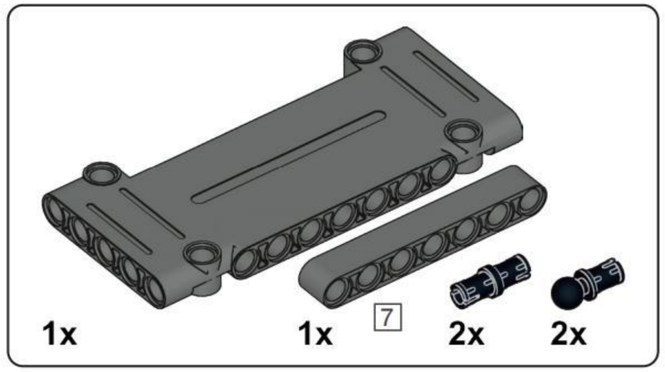


## D56

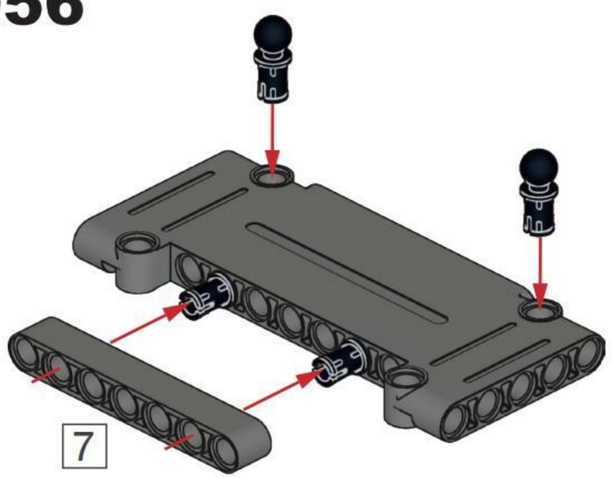


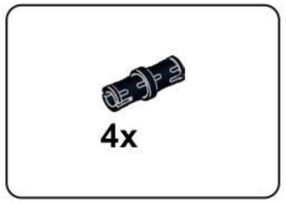


## D57

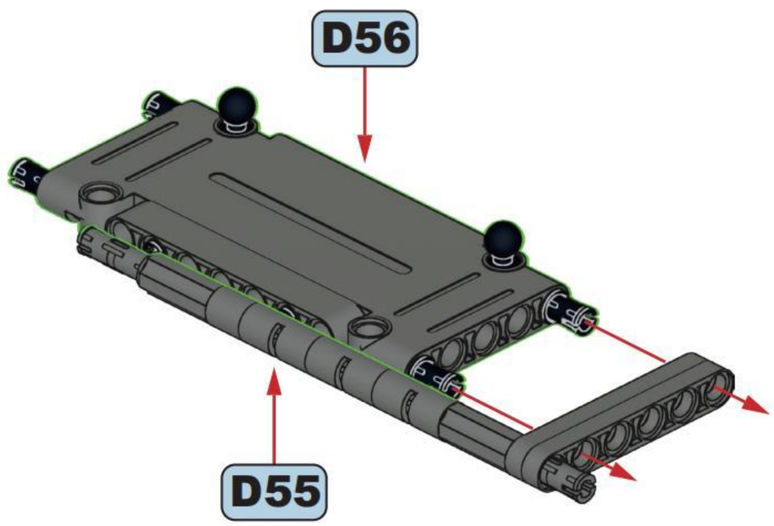


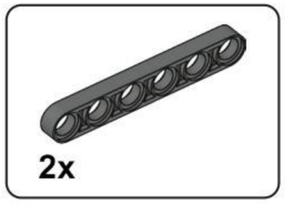


## D58

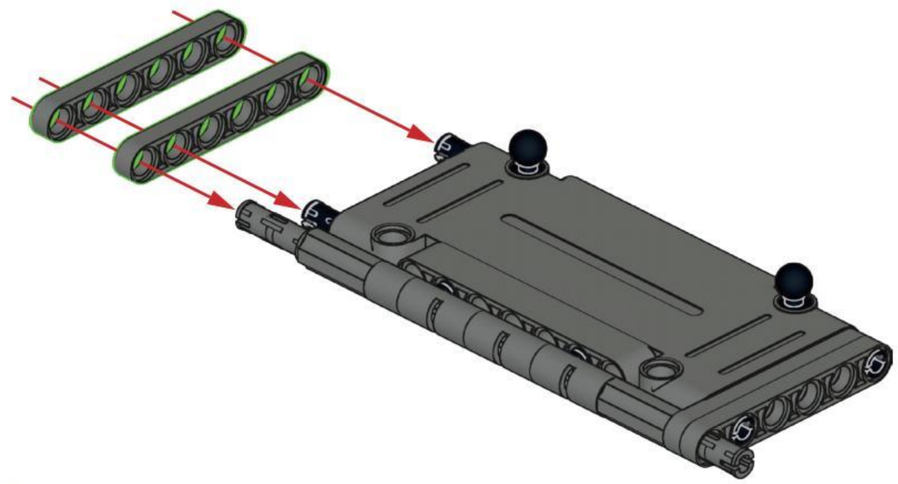

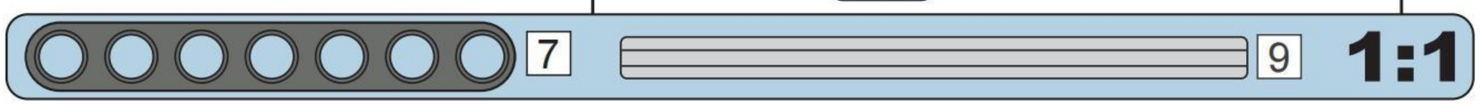

# D59

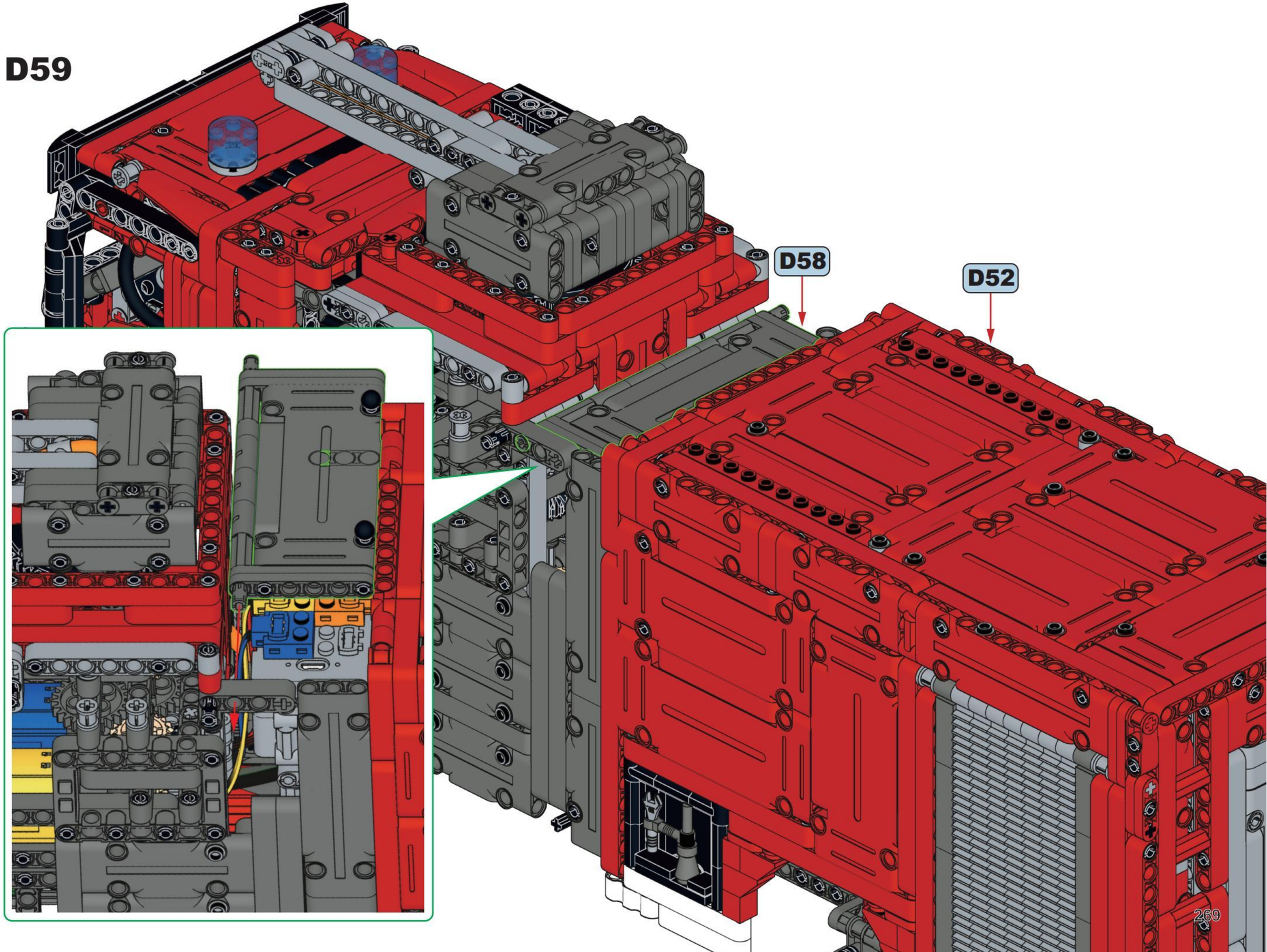

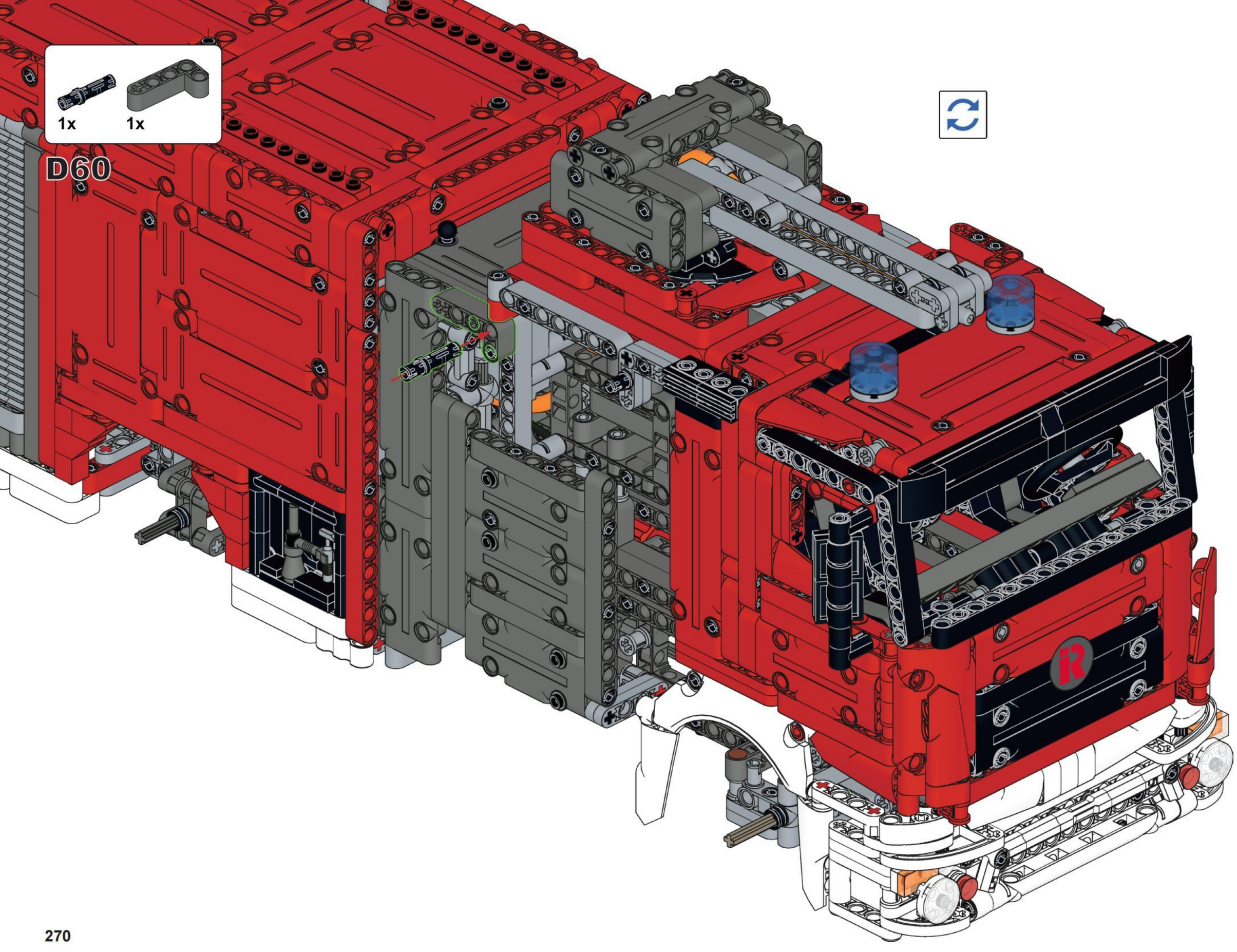
1x
1x
D60

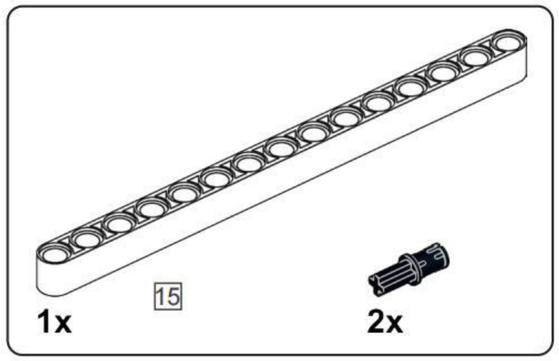


## D61

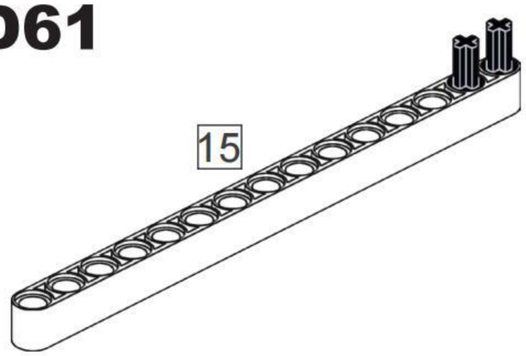


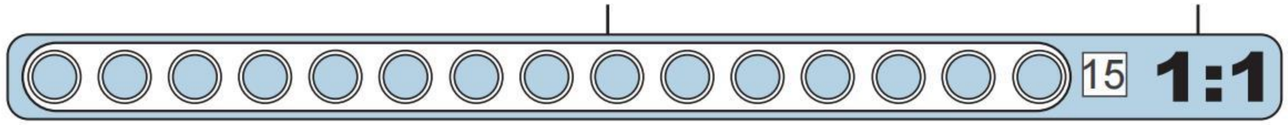


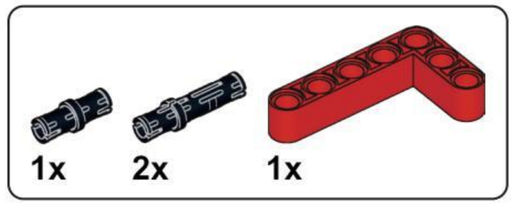


## D62

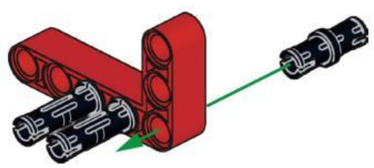

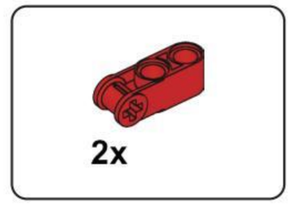


## D63

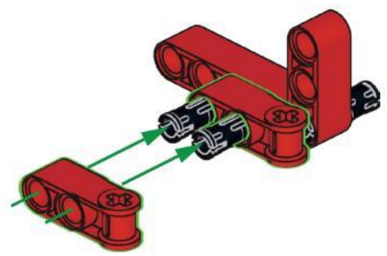

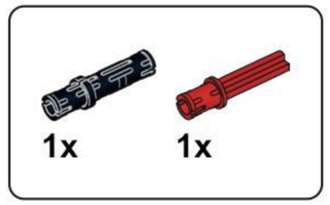


## D64

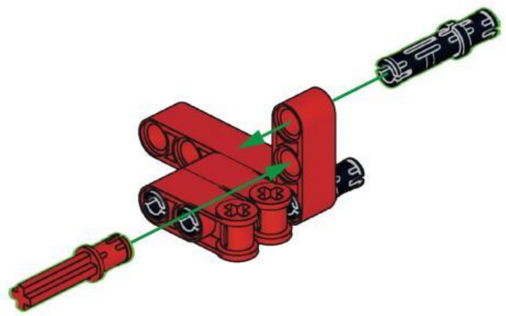

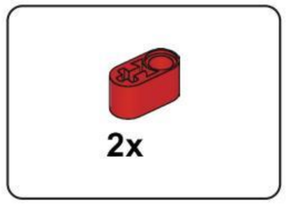


## D65

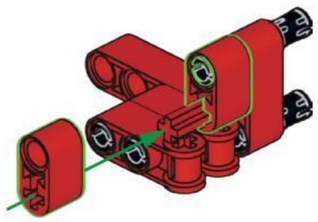

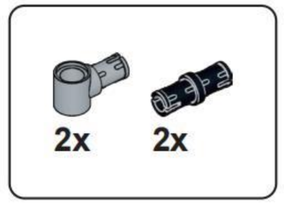


## D66

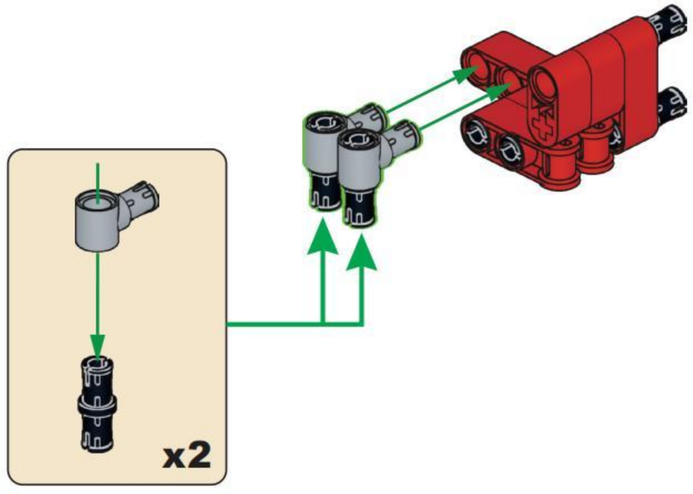


## D67

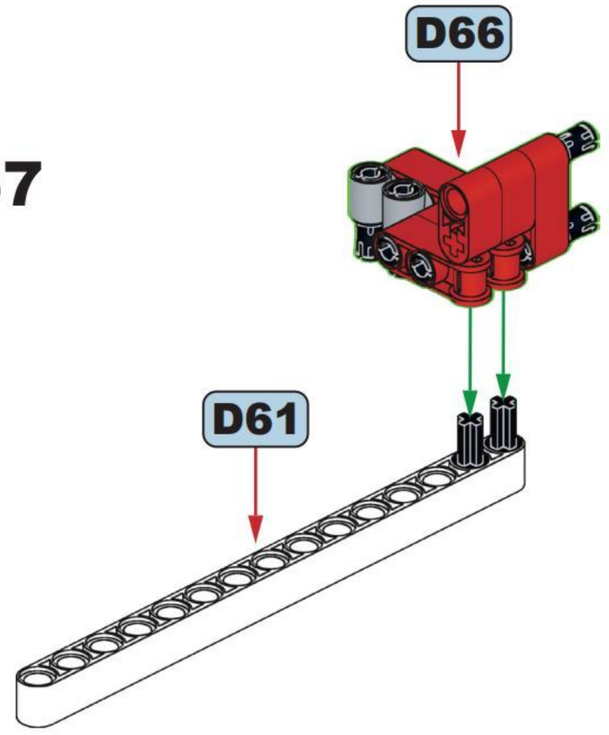

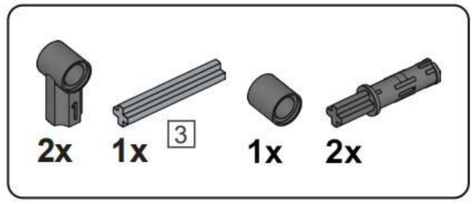


## D68

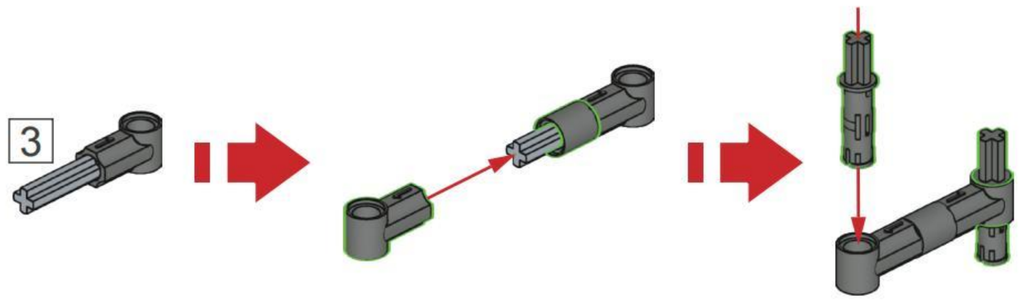


## D69

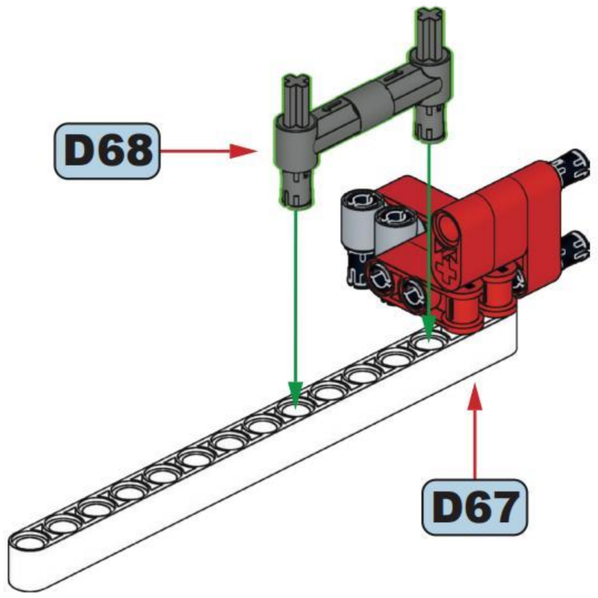

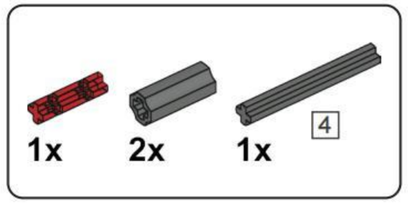


## D70

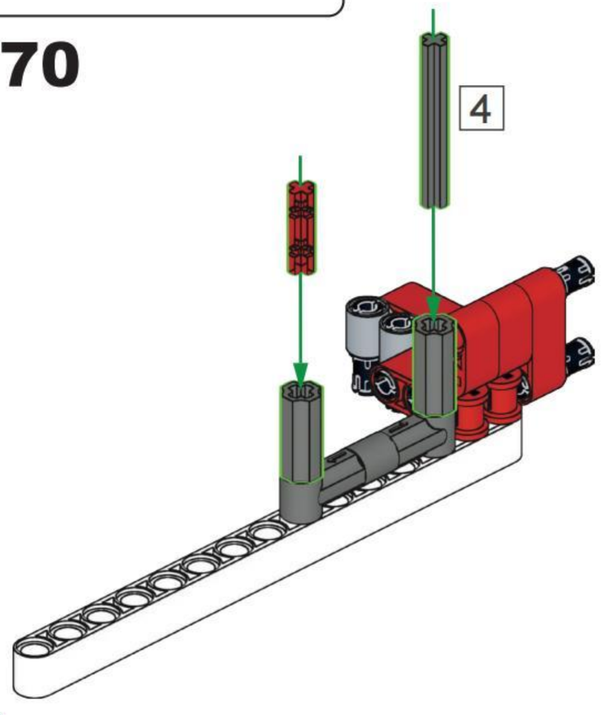


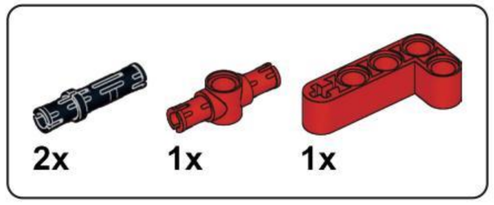


## D71

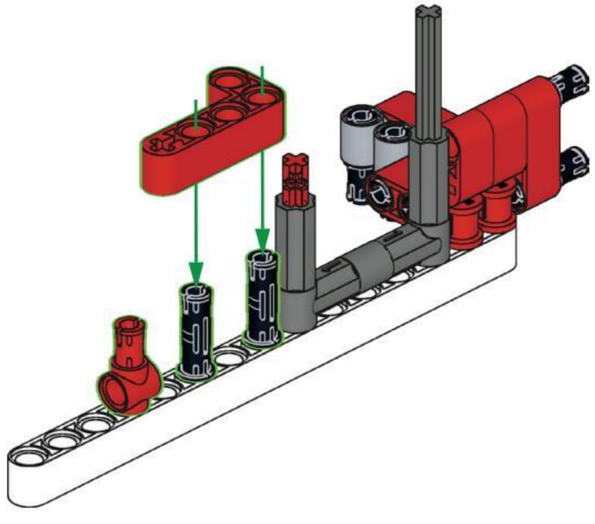

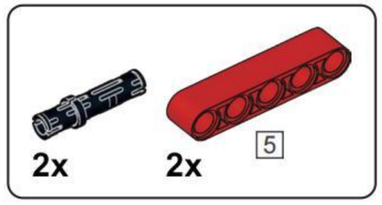


## D72

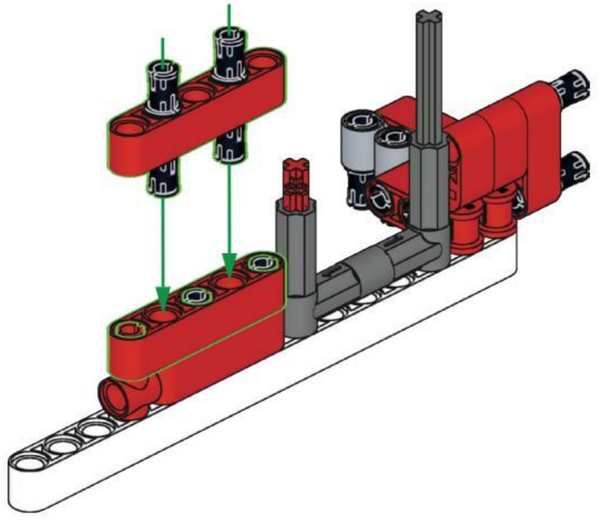

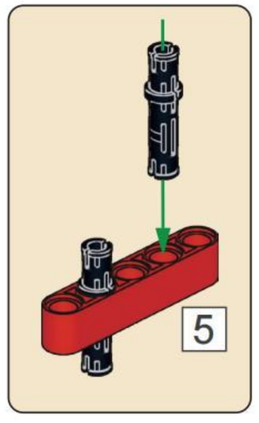

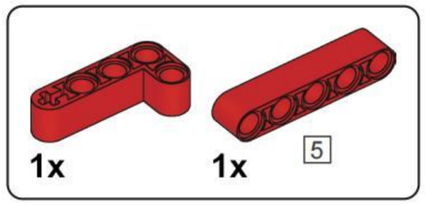


## D73

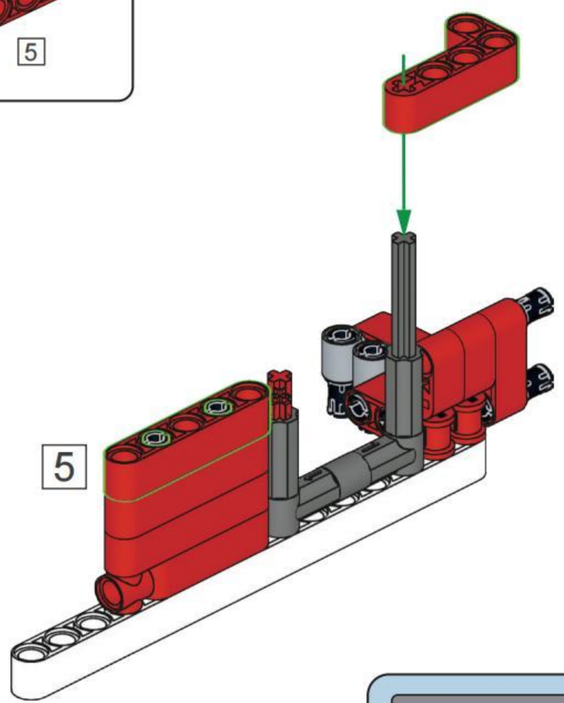


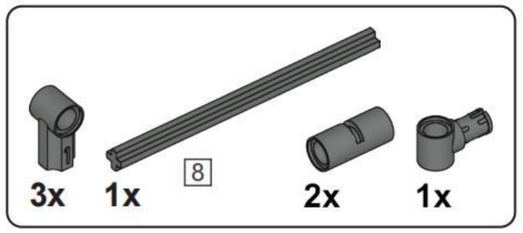


## D74

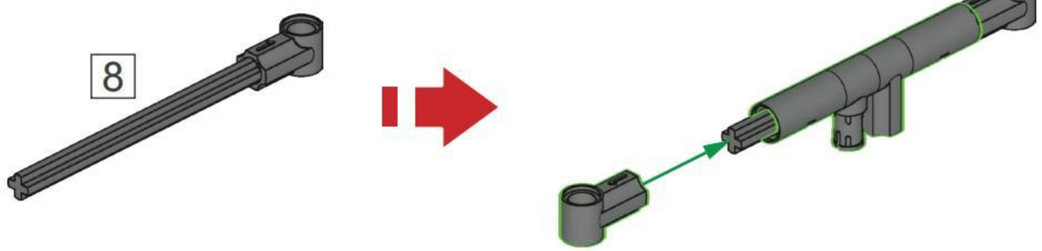


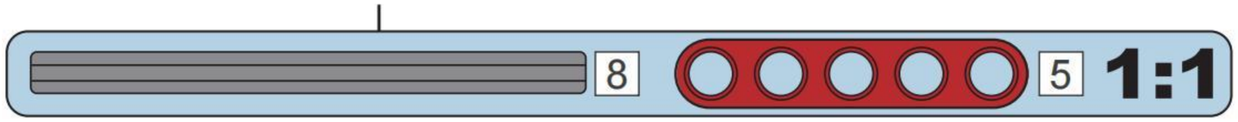


## D75

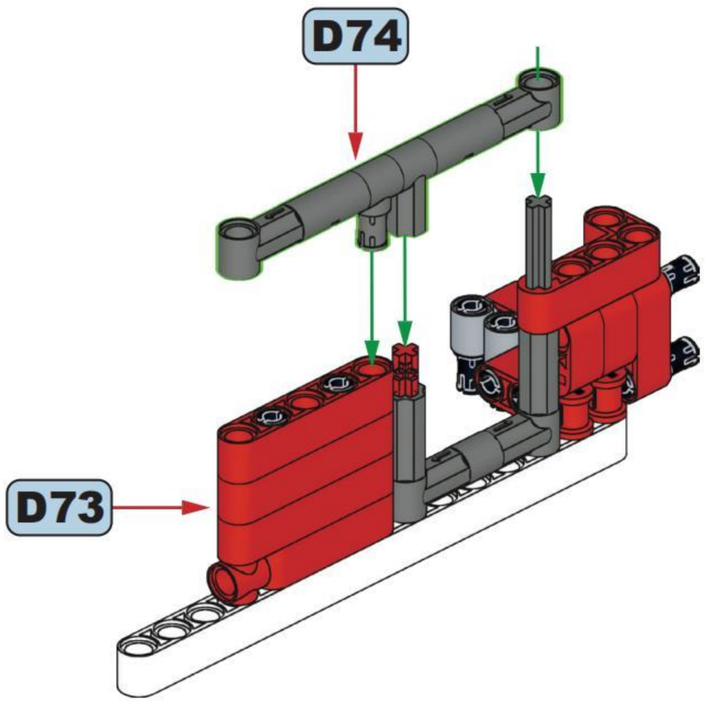


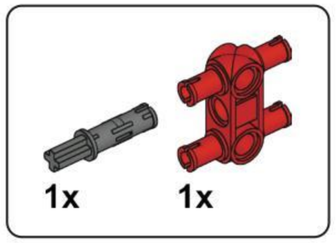


## D76

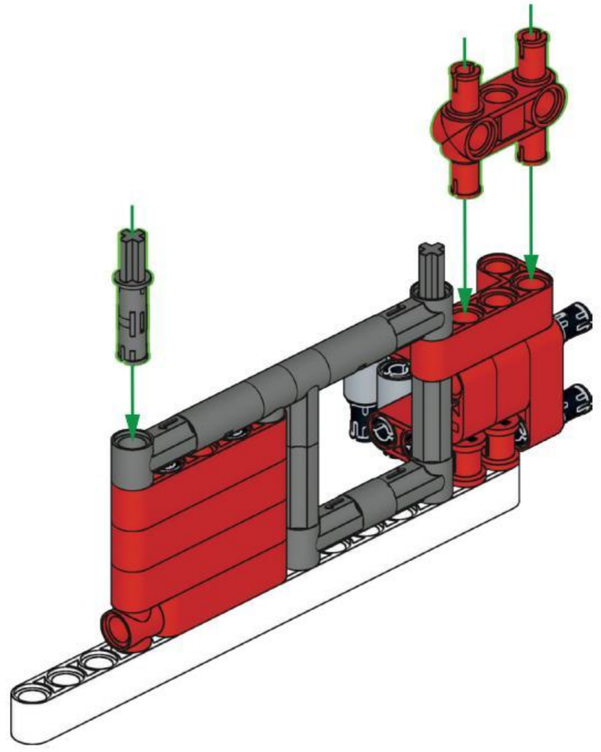

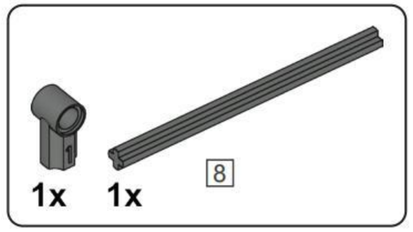


## D77

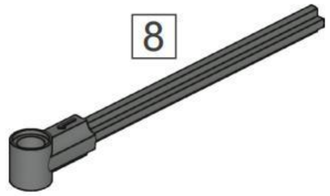

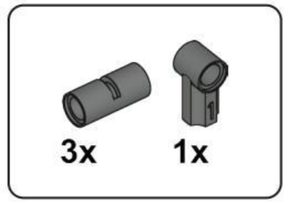


## D78

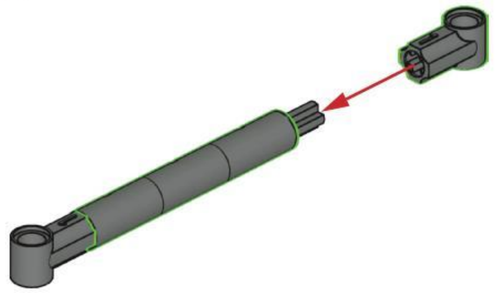

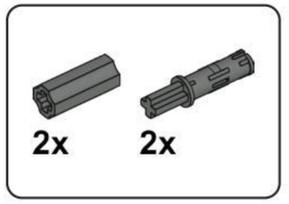


## D79

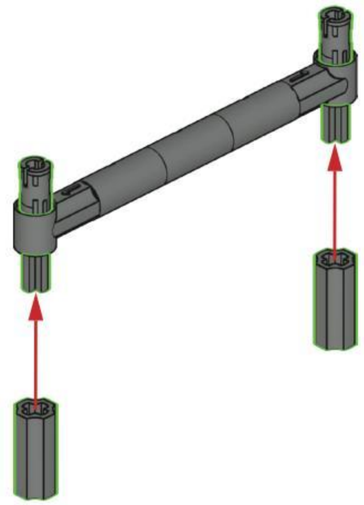

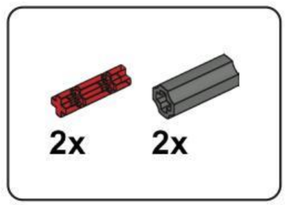


## D80

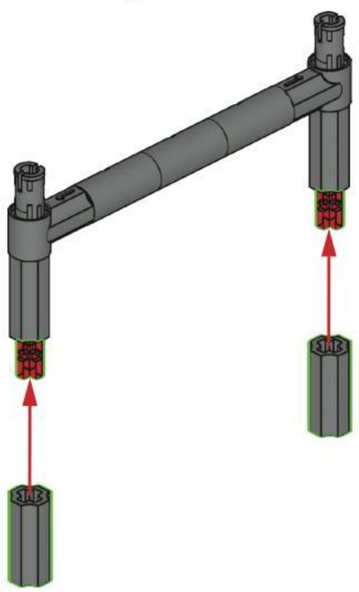

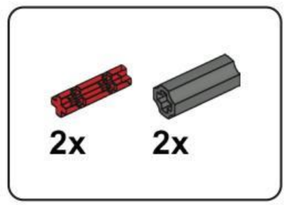


## D81

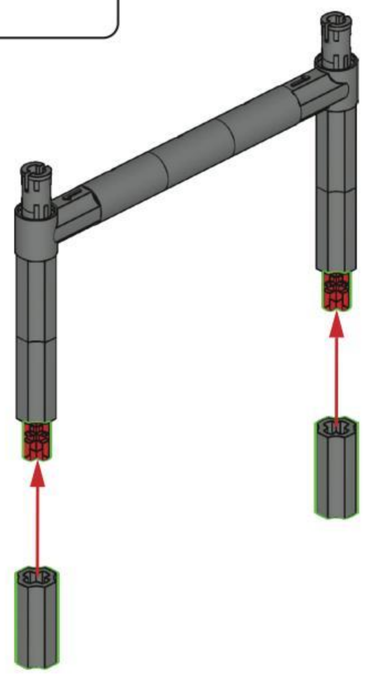

## D82

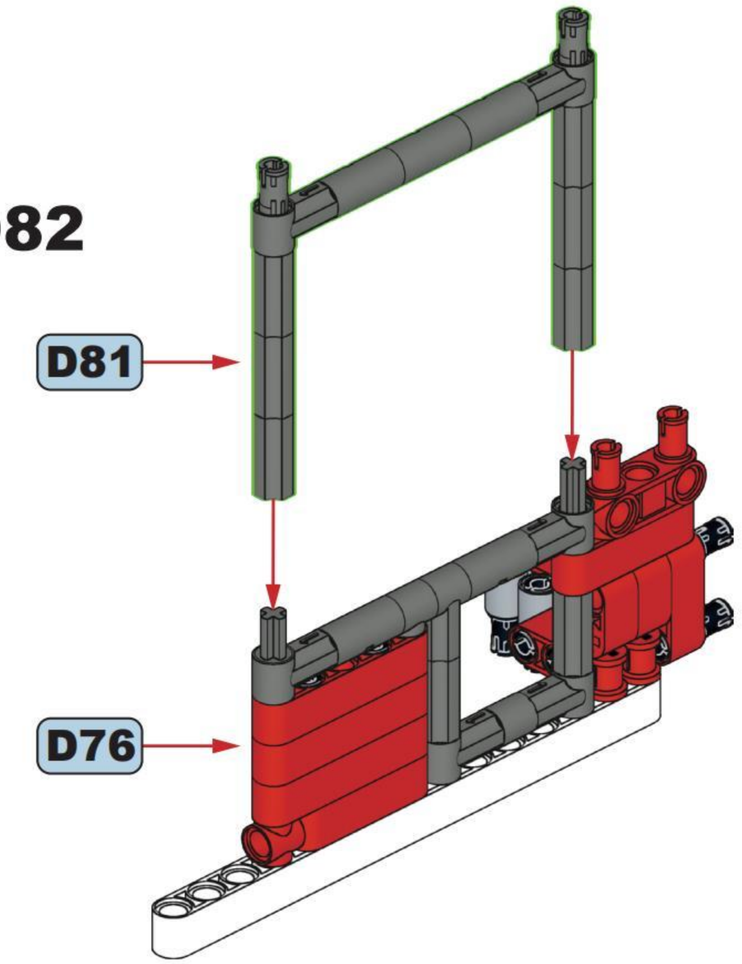

3x 1x

## D83

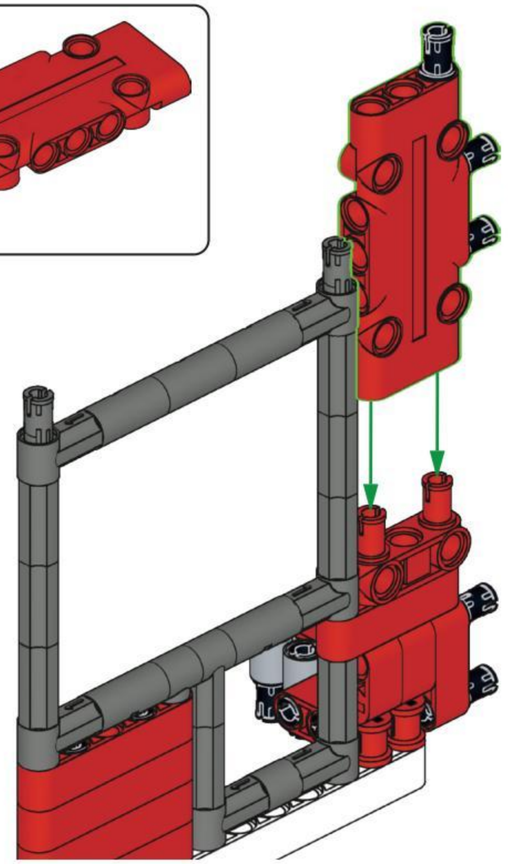

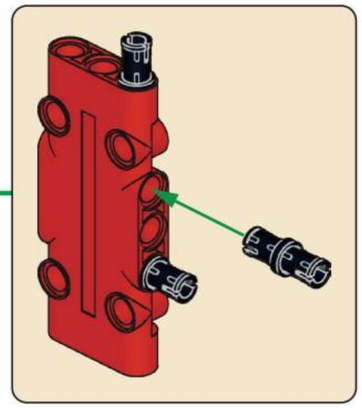

4x 4x

## D84

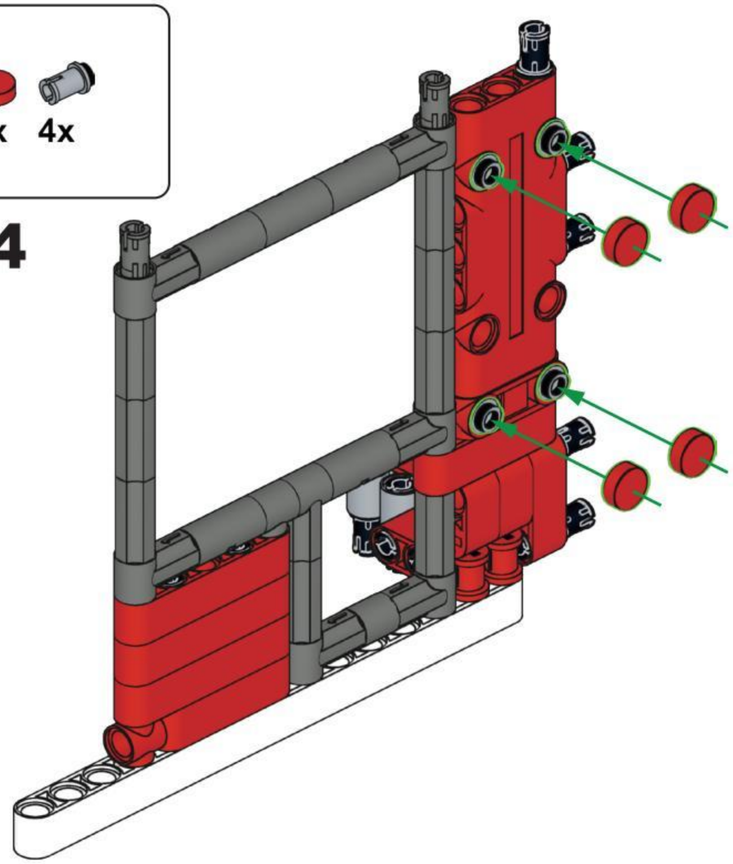

1x 13 1x 1x

## D85

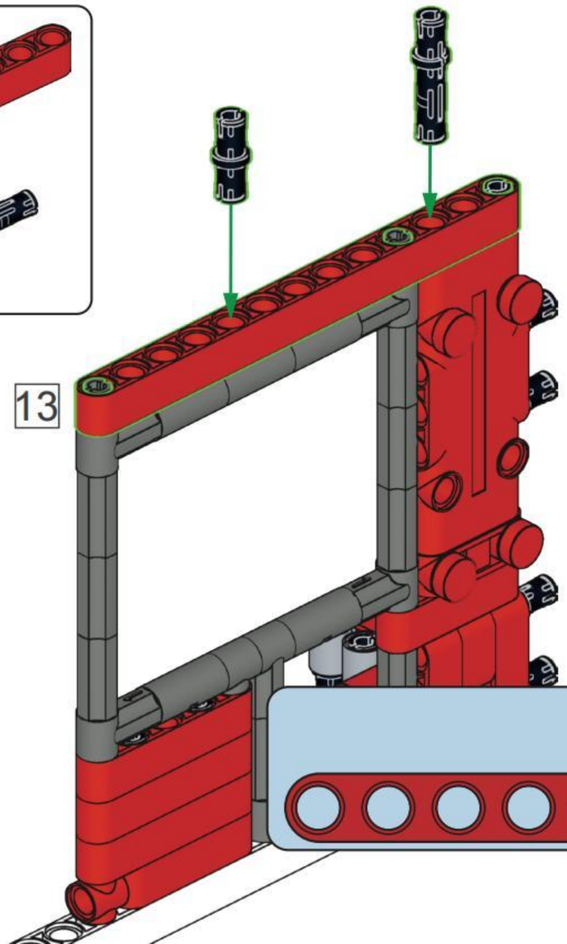


1x 2x 1x 7

## D86

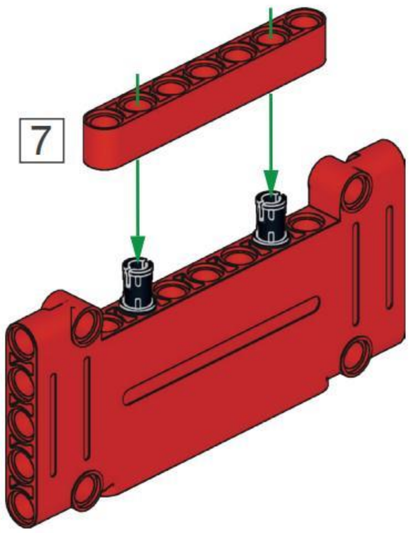


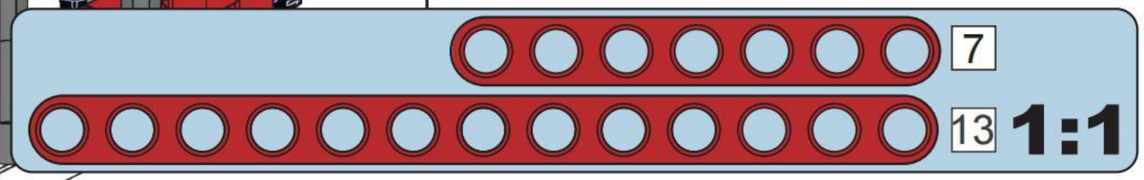

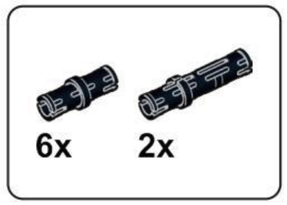


## D87

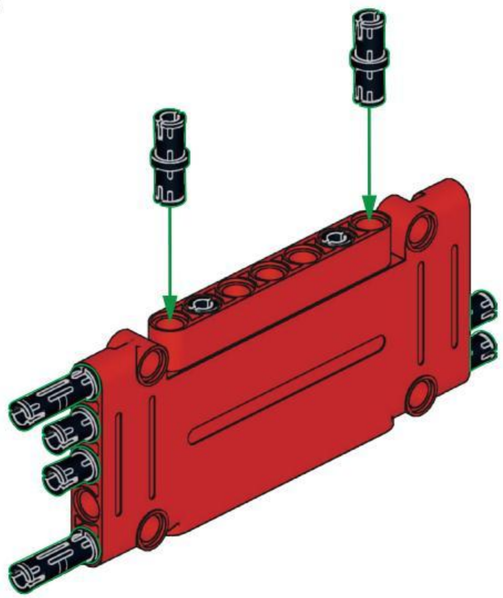

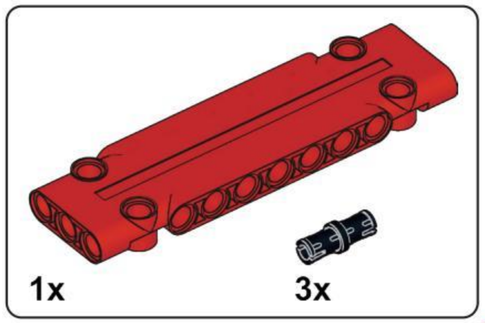


## D88

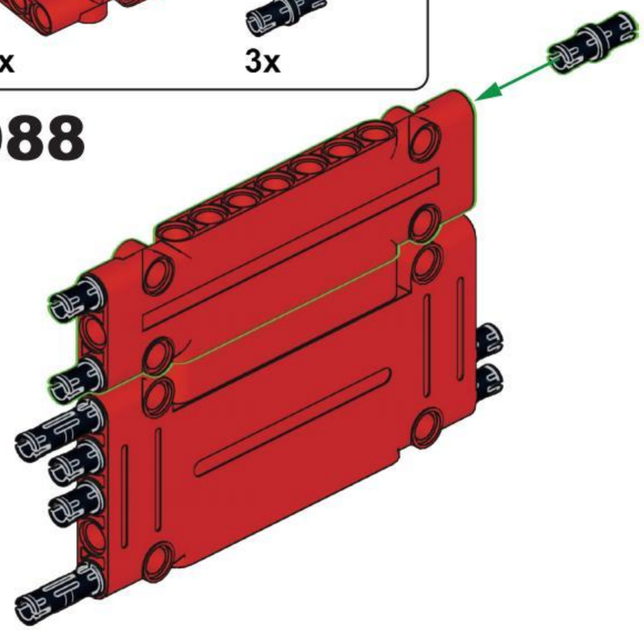

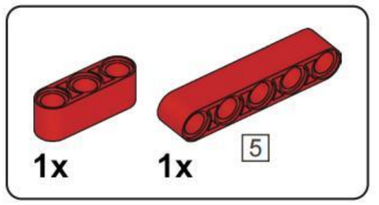


## D89

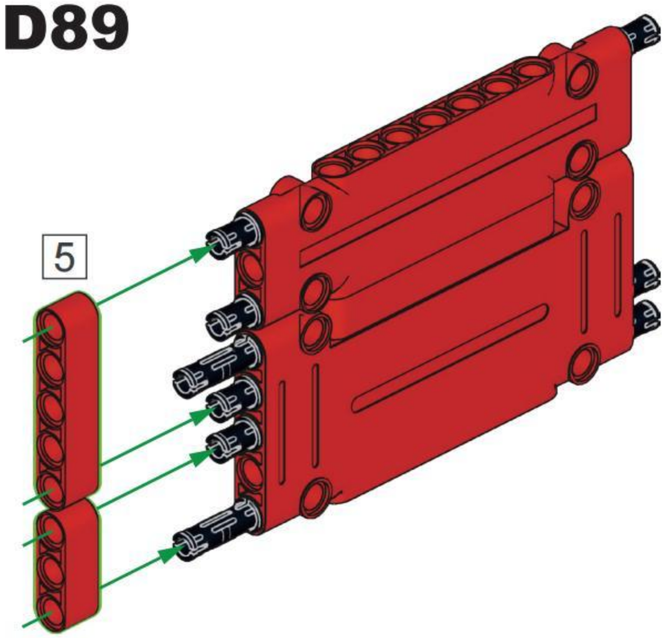


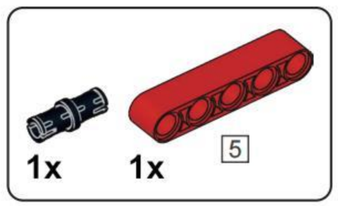


## D90

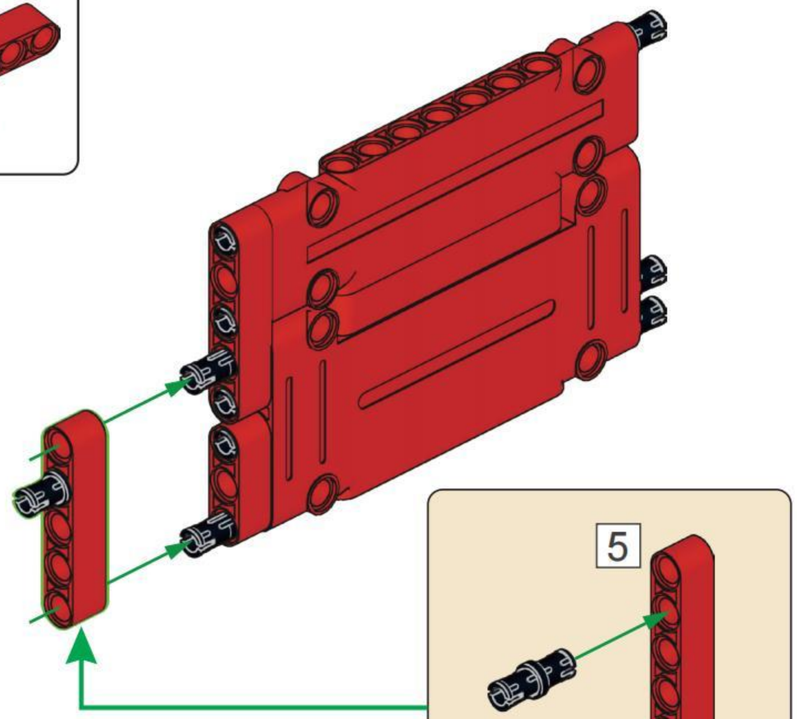


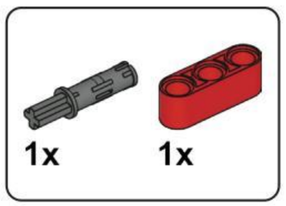


## D91

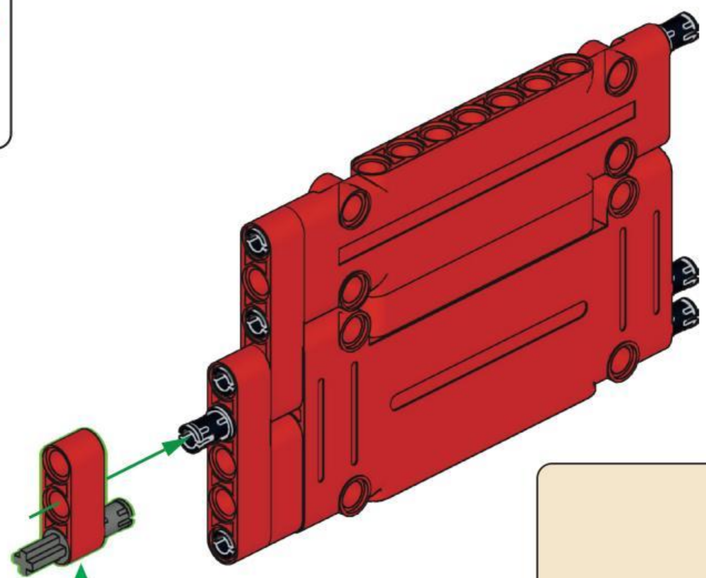

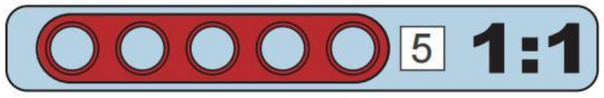


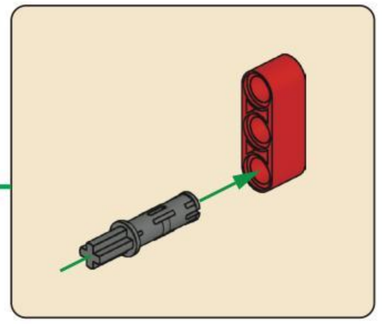

## D92

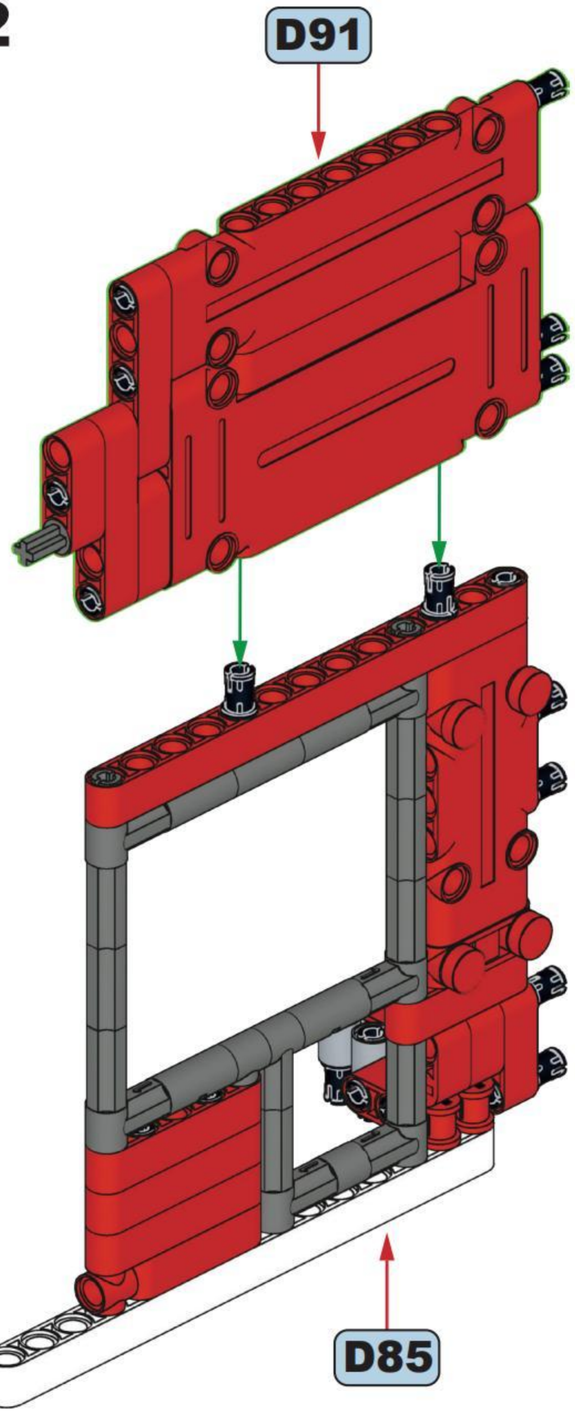


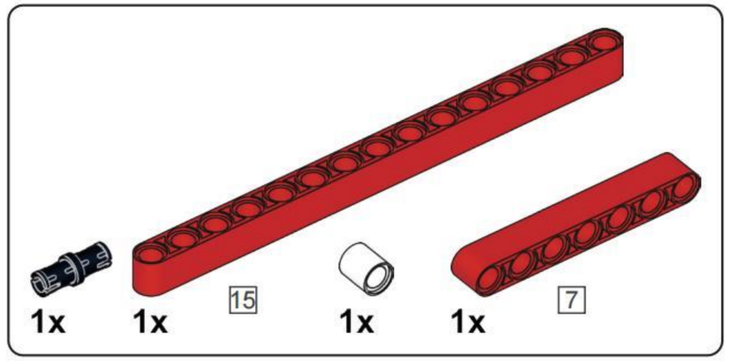


## D93

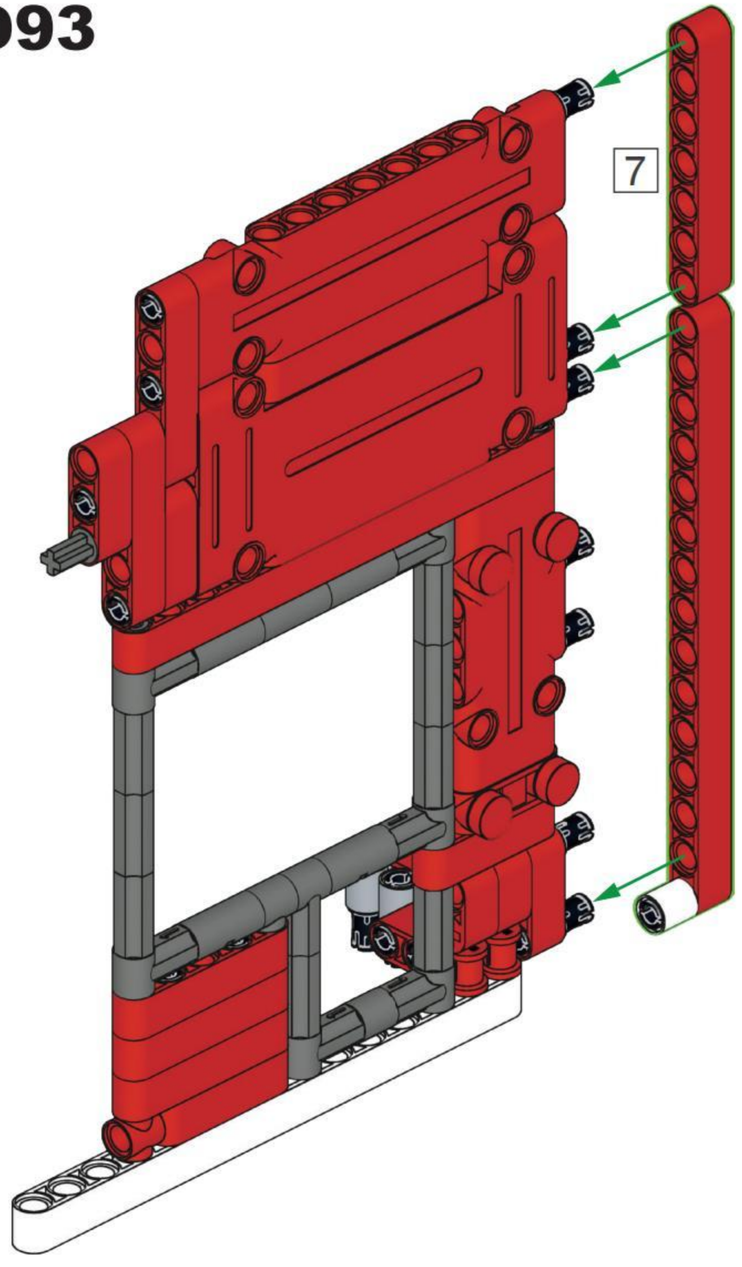


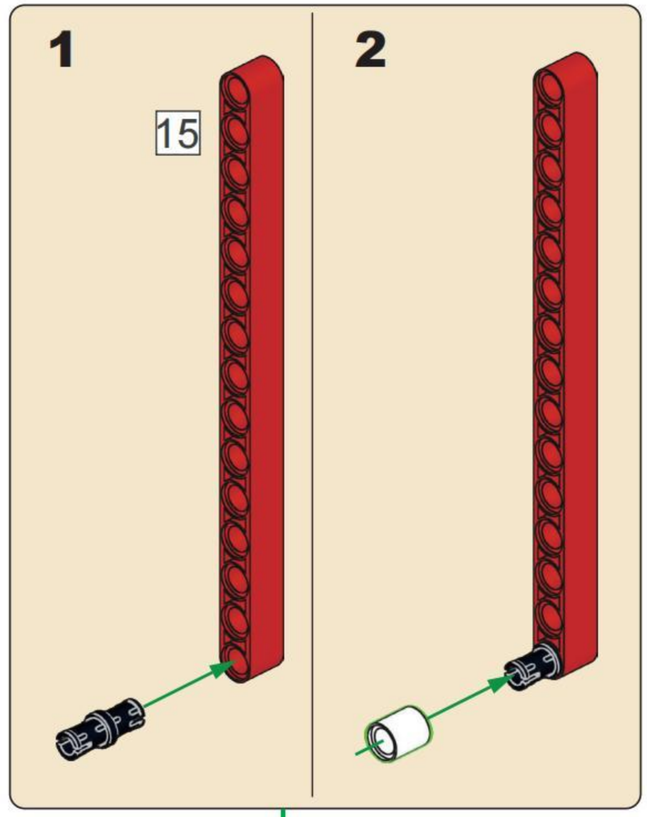


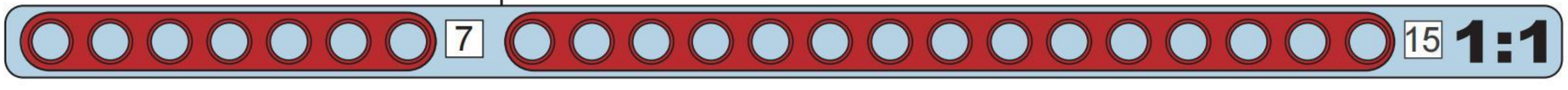

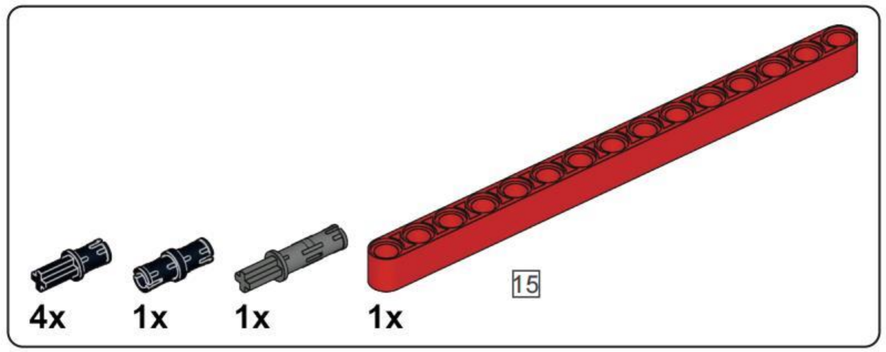


# D94

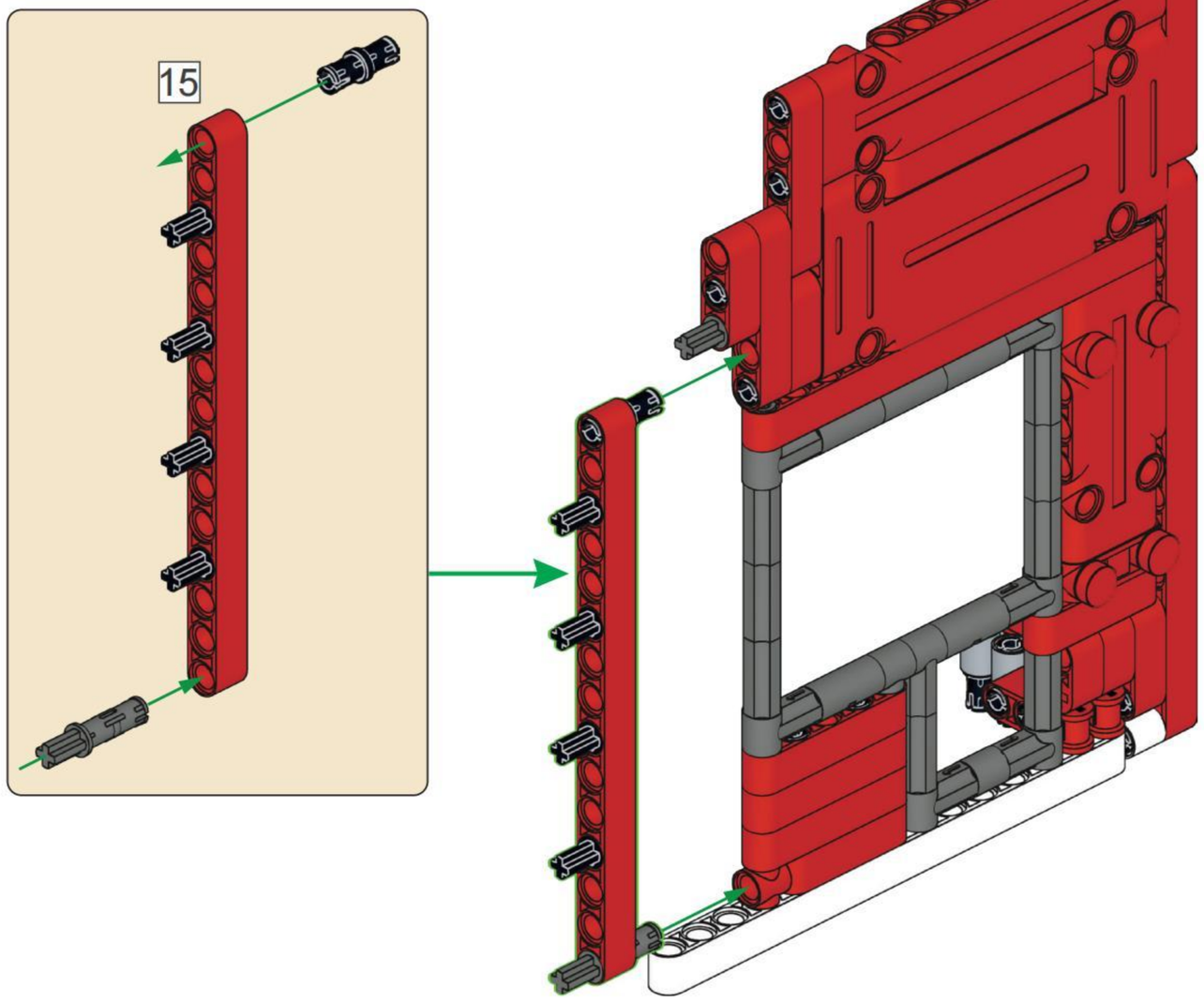


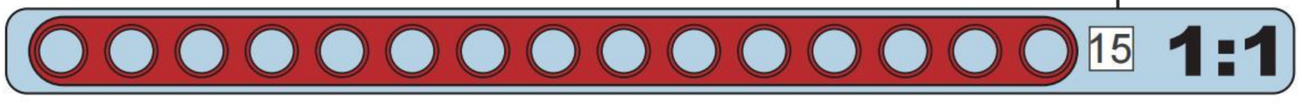


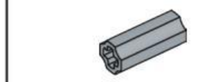


# D95

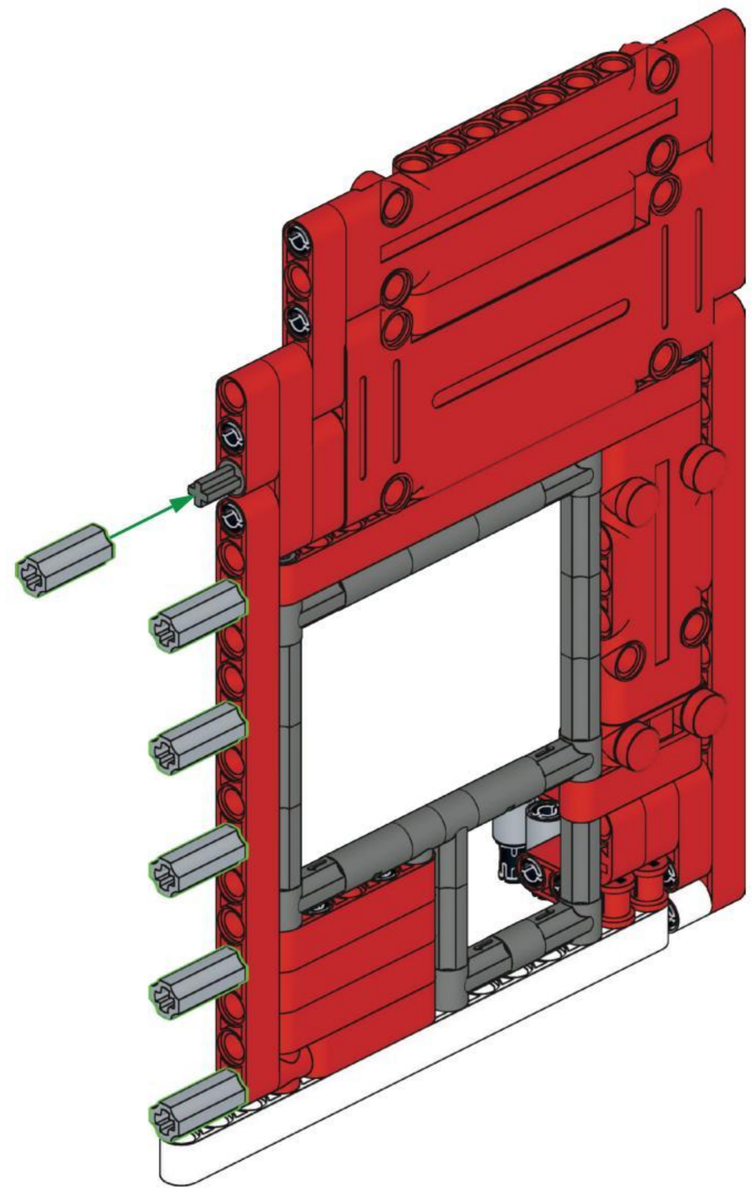

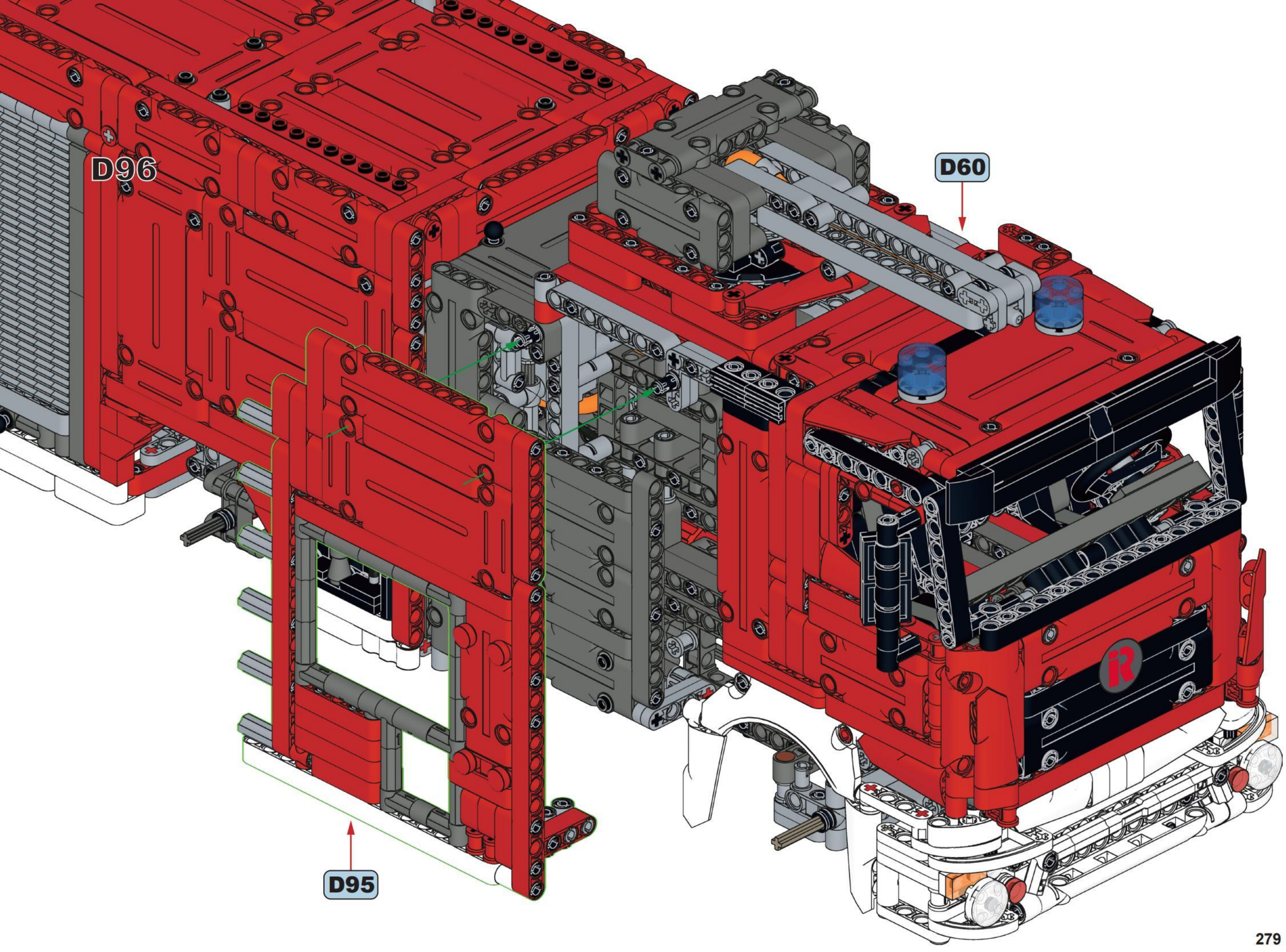
D96
D60
D95

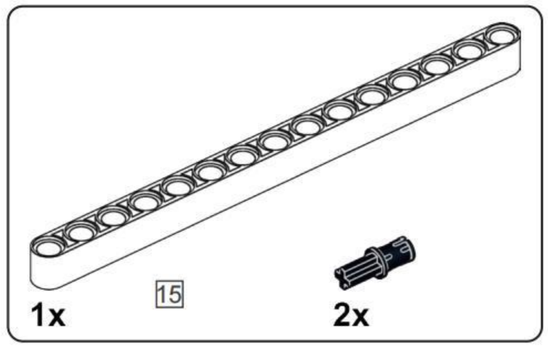


## D97

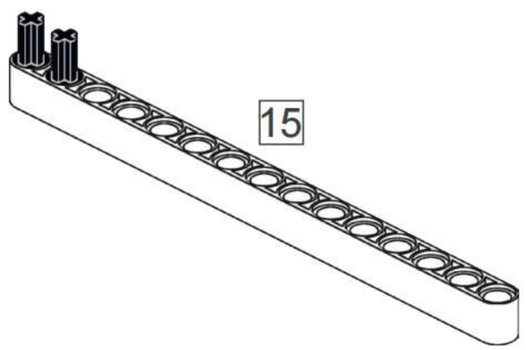


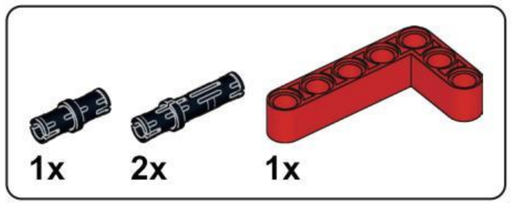


## D98

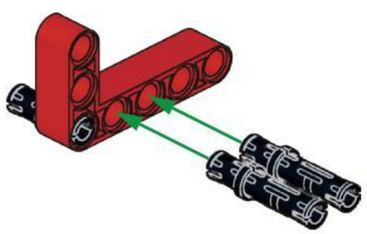

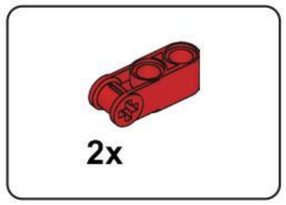


## D99

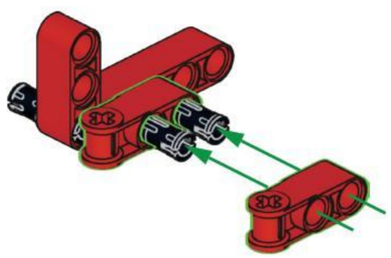

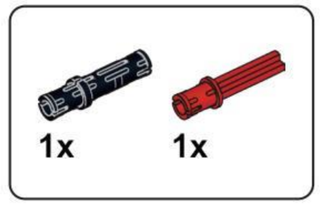


## D100

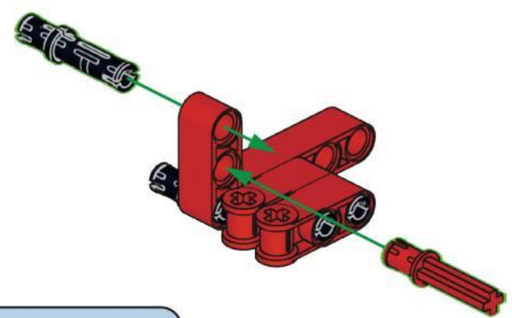

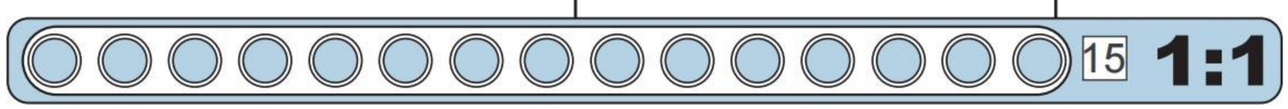


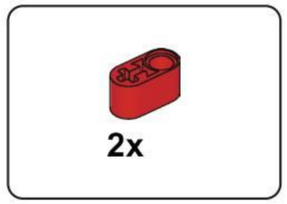


## D101

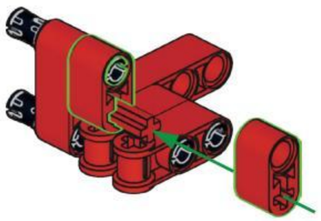

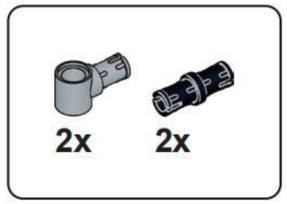


## D102

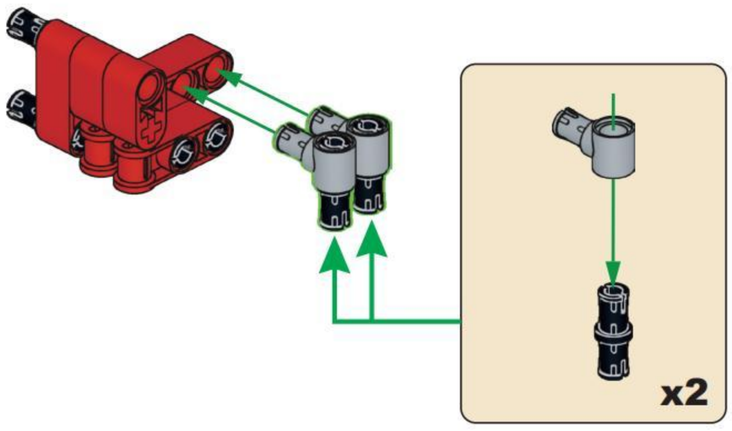


## D103

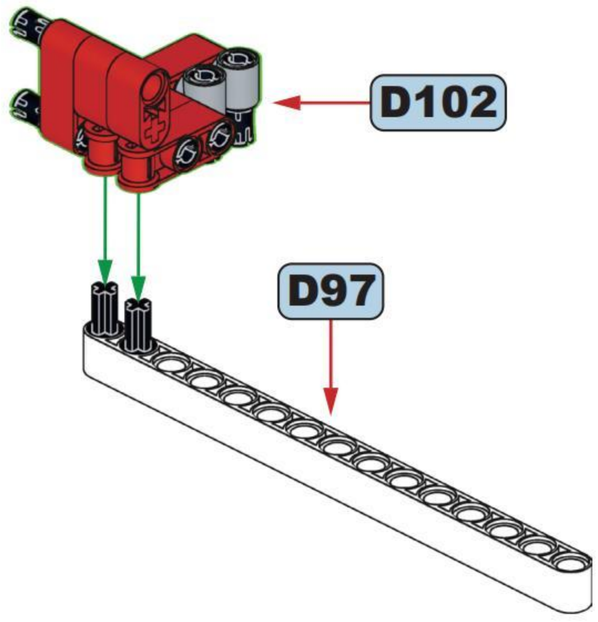

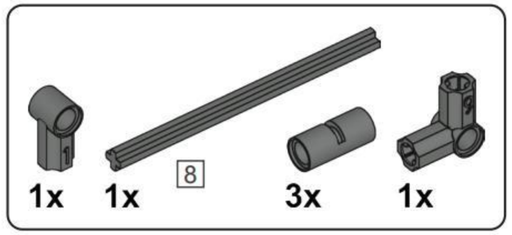


## D104

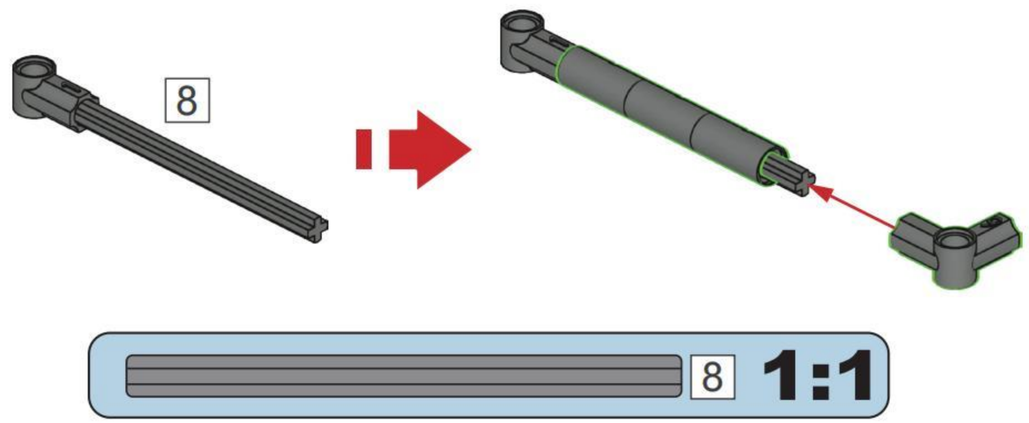


## D106

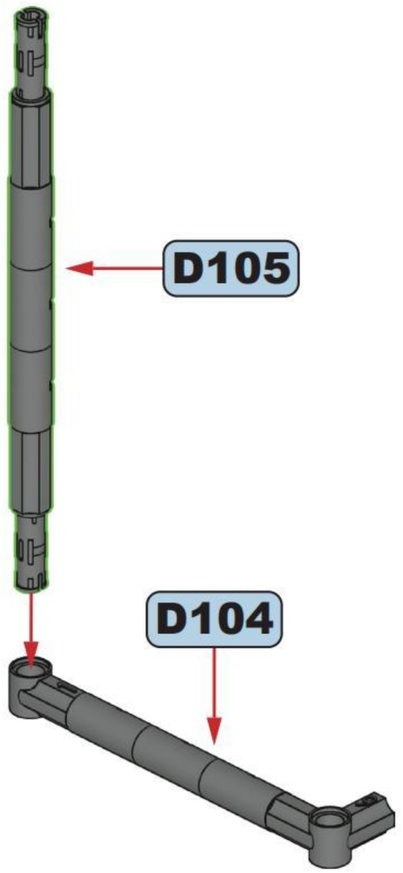


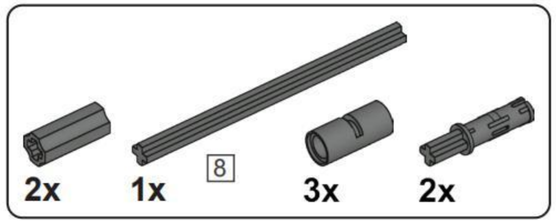


## D105

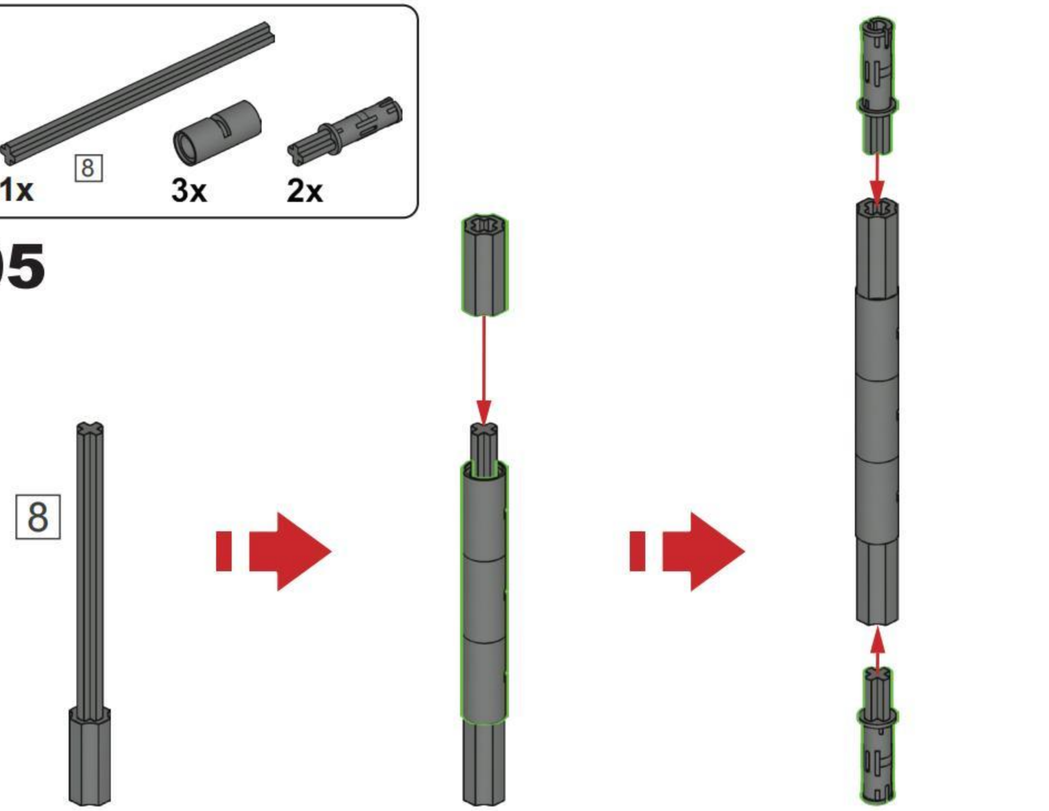


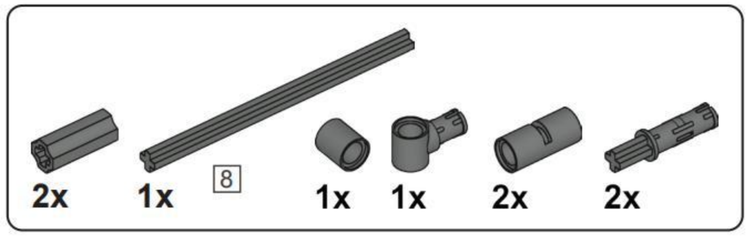


## D107

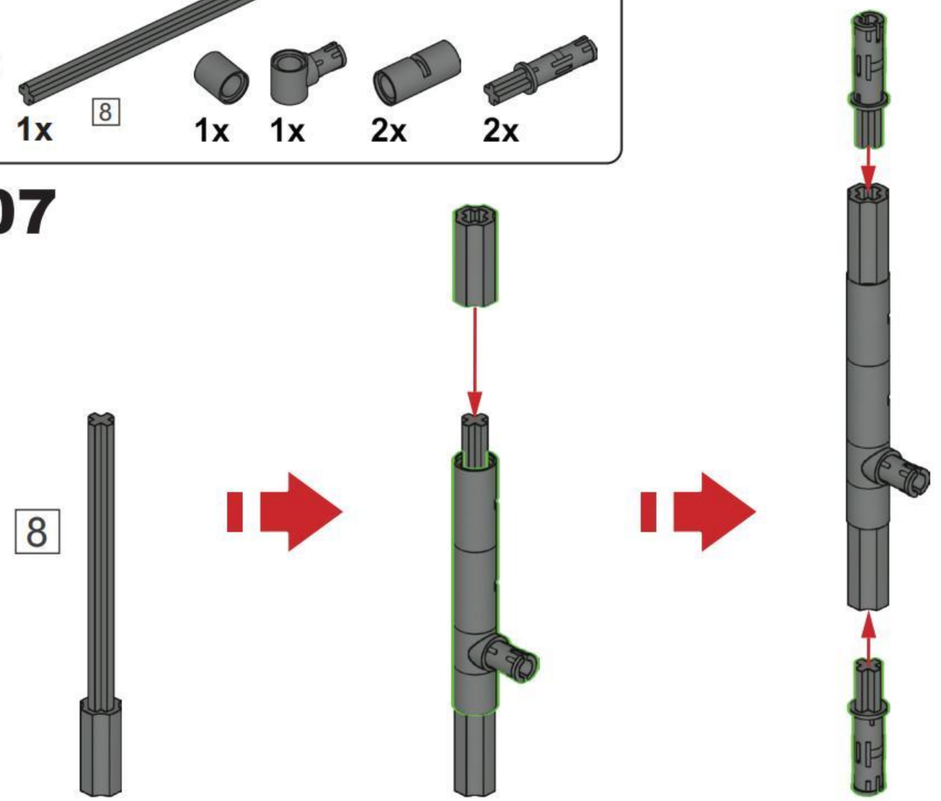

## D108

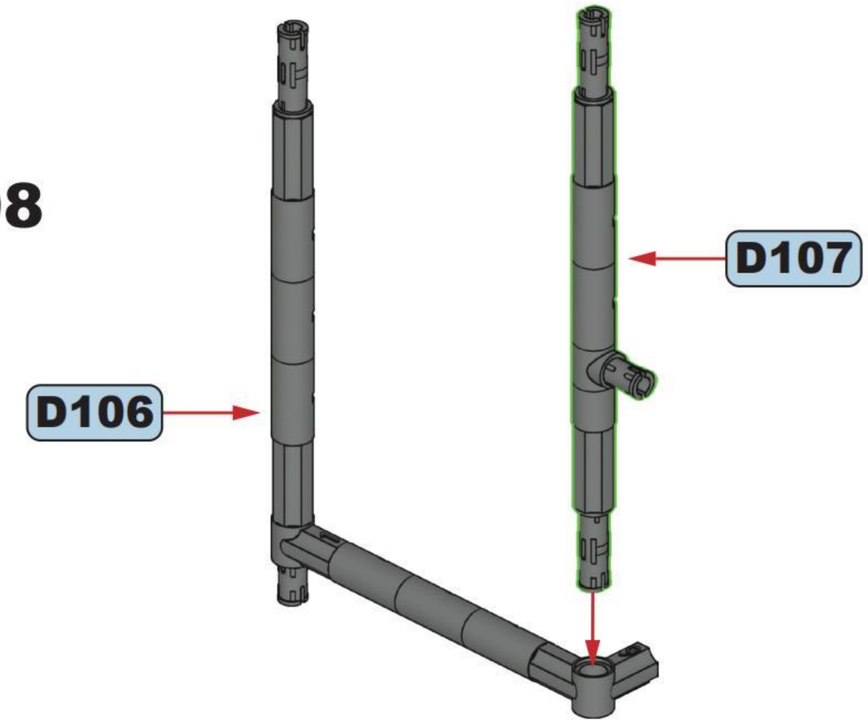


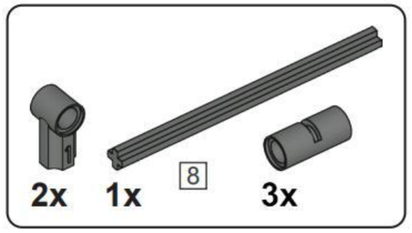


## D109

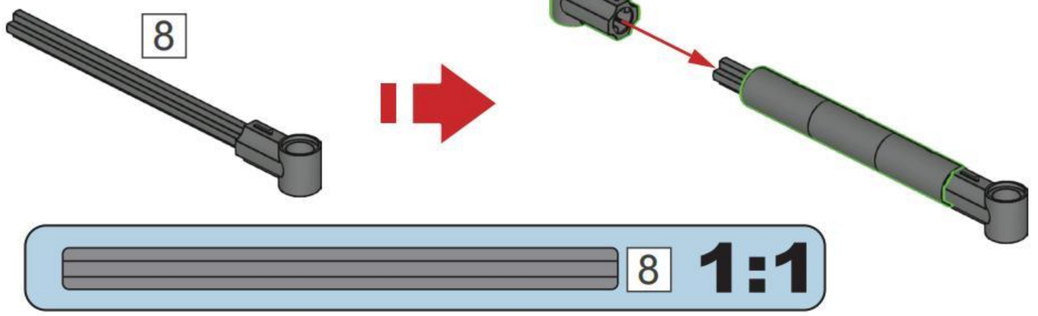


## D110

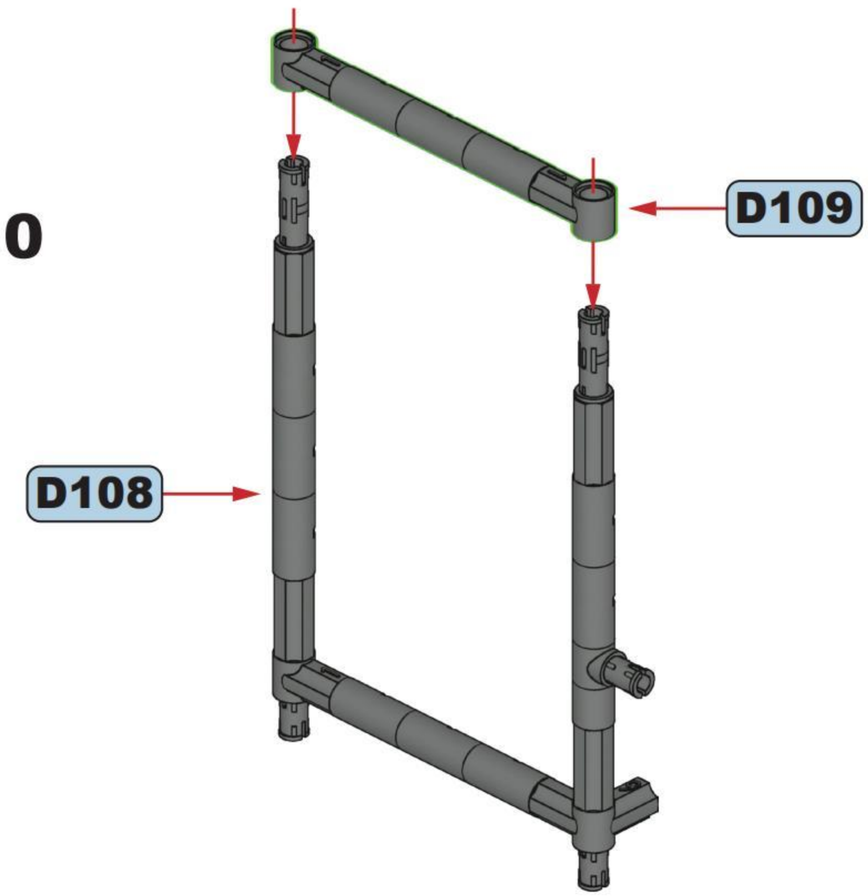


## D111

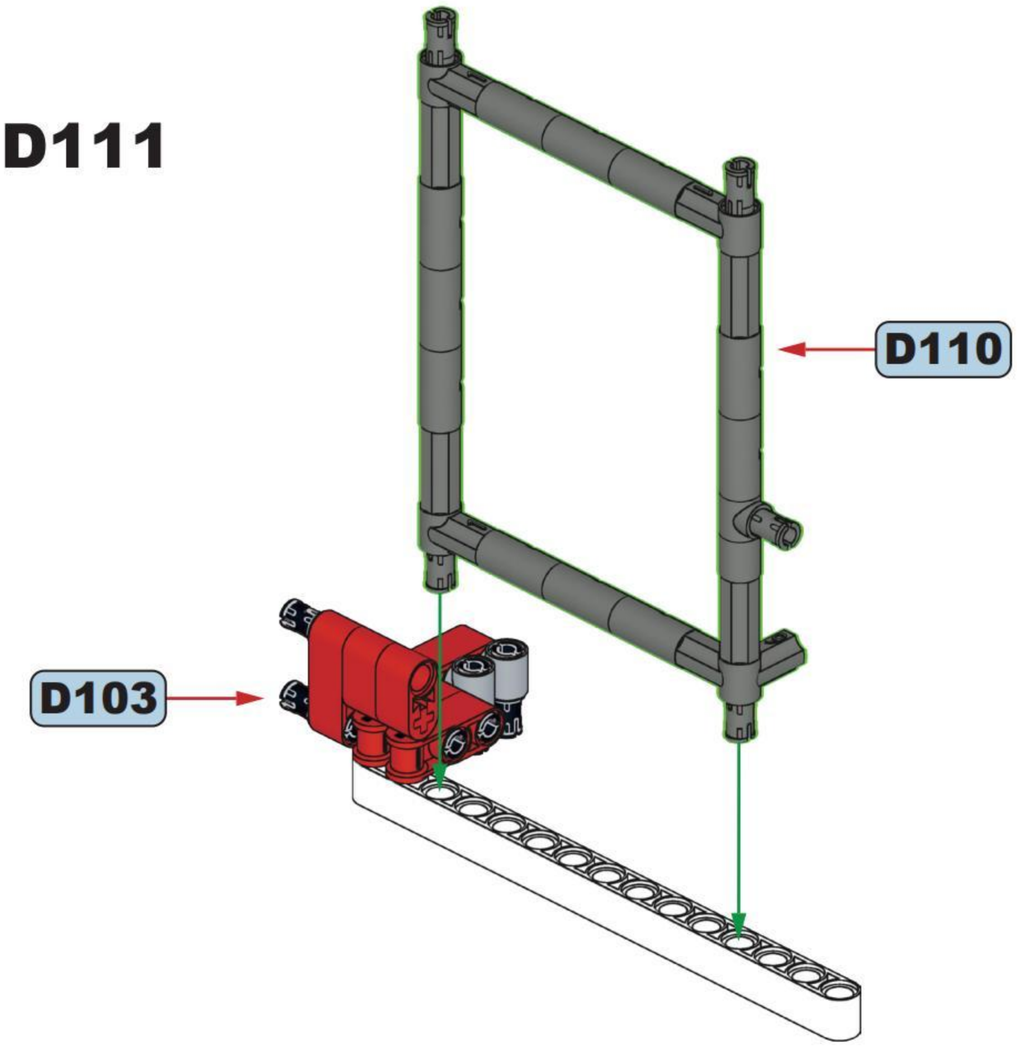

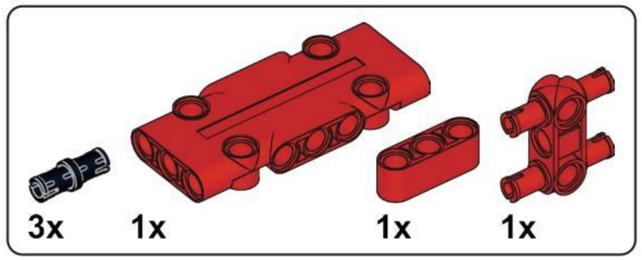


## D112

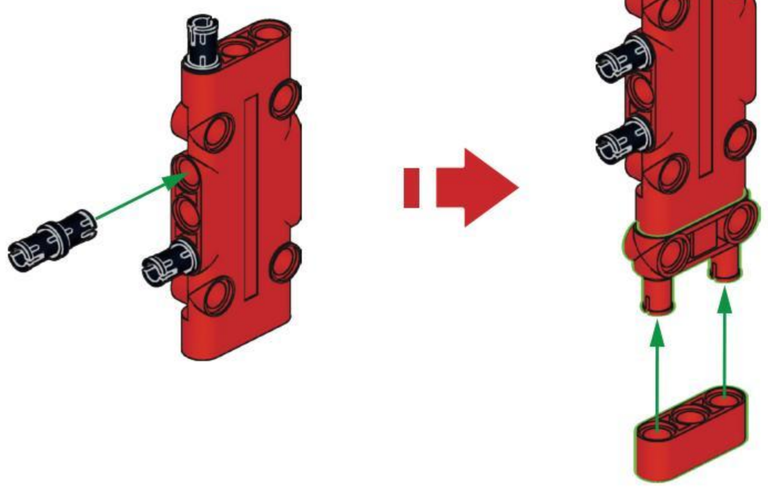

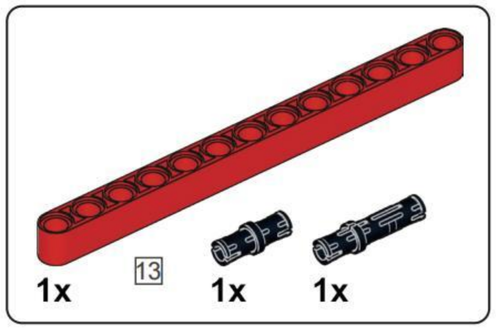


## D113

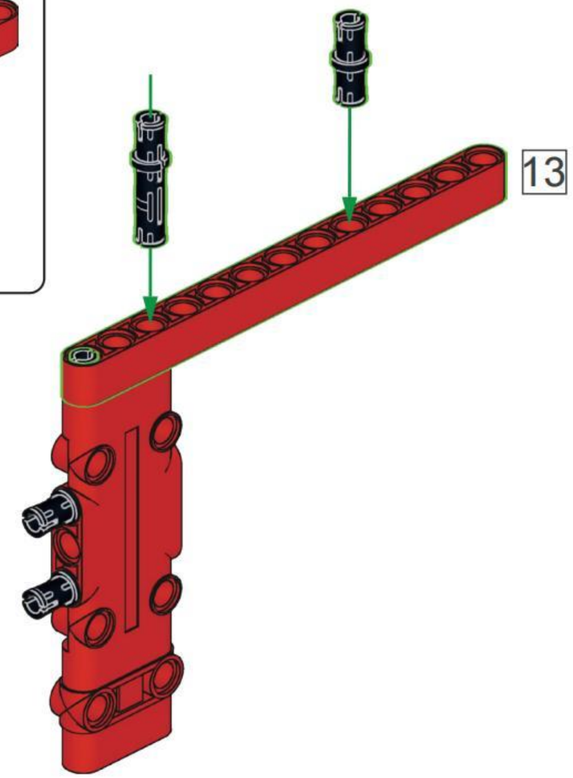


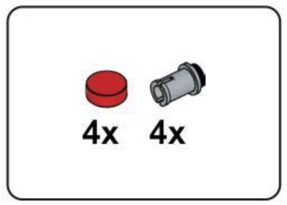


## D114

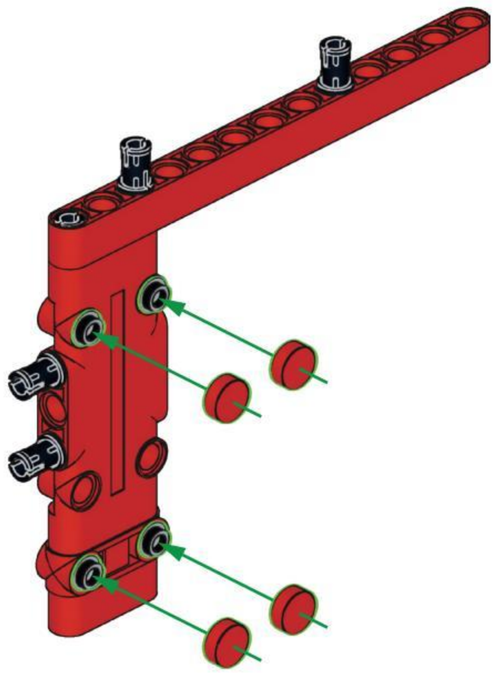

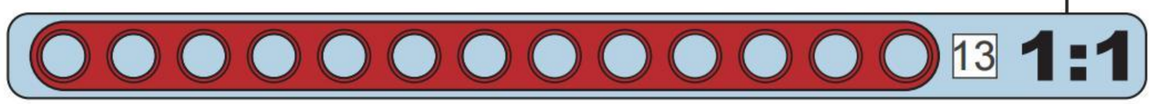


## D115

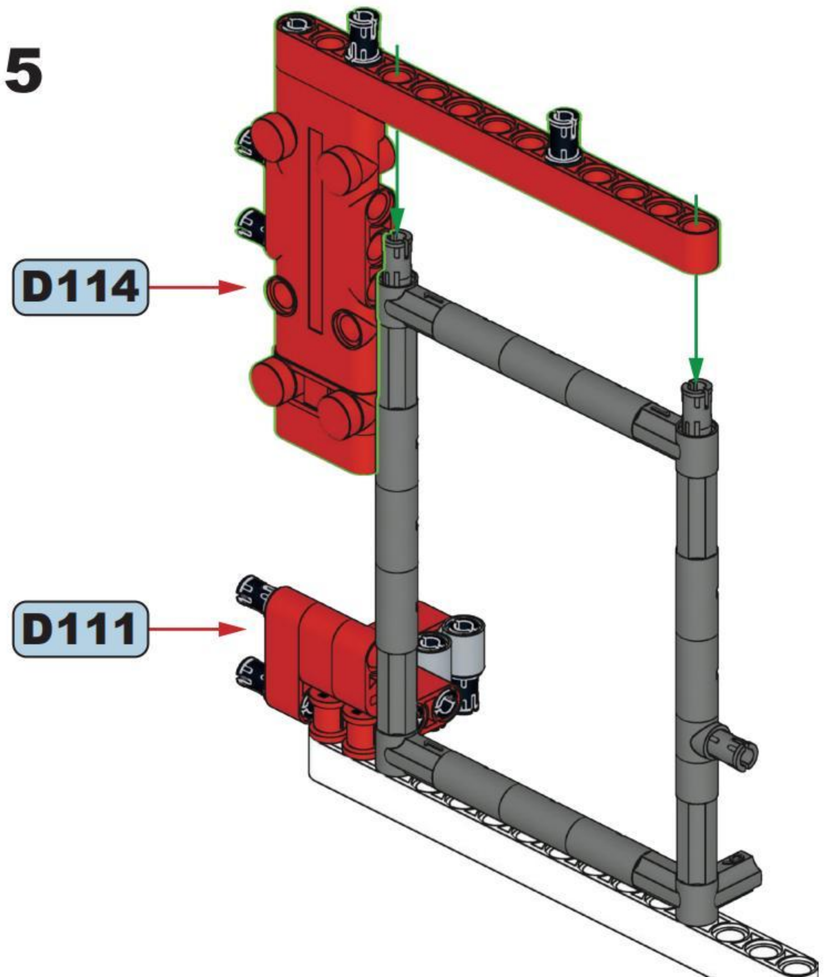

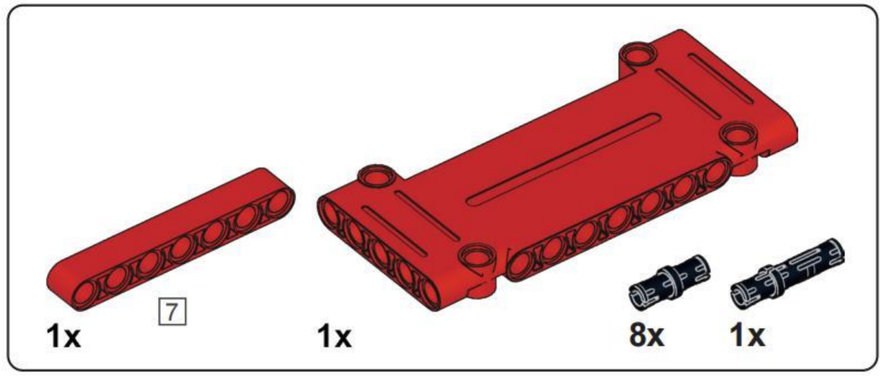


# D116

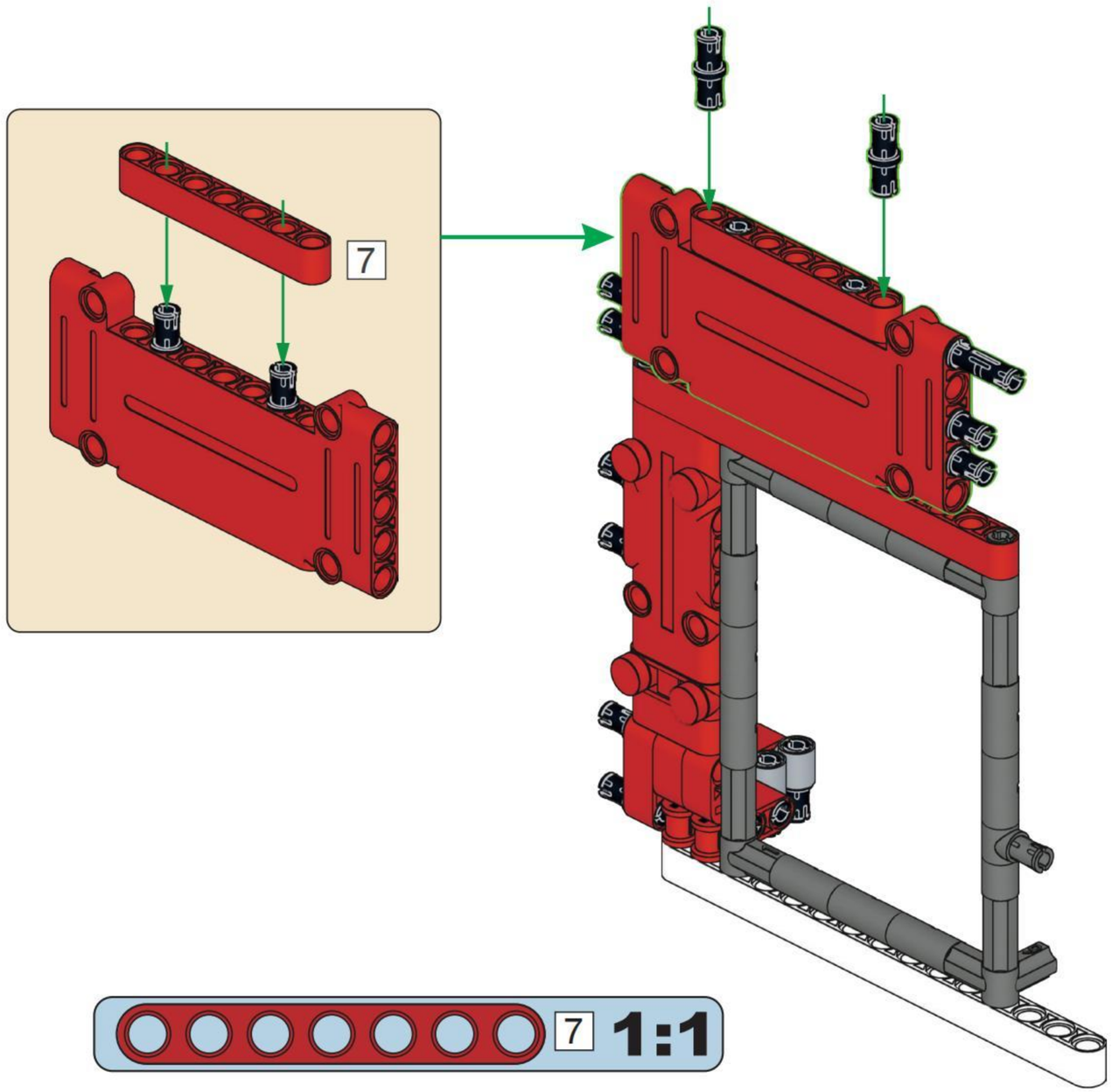





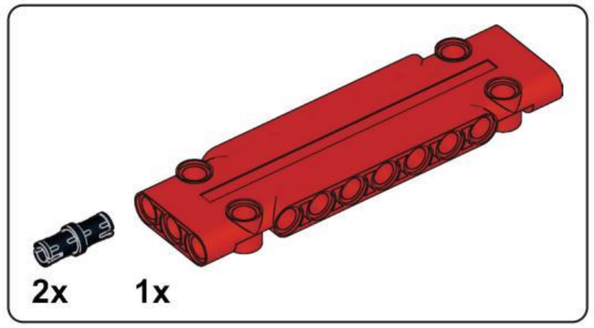


# D117

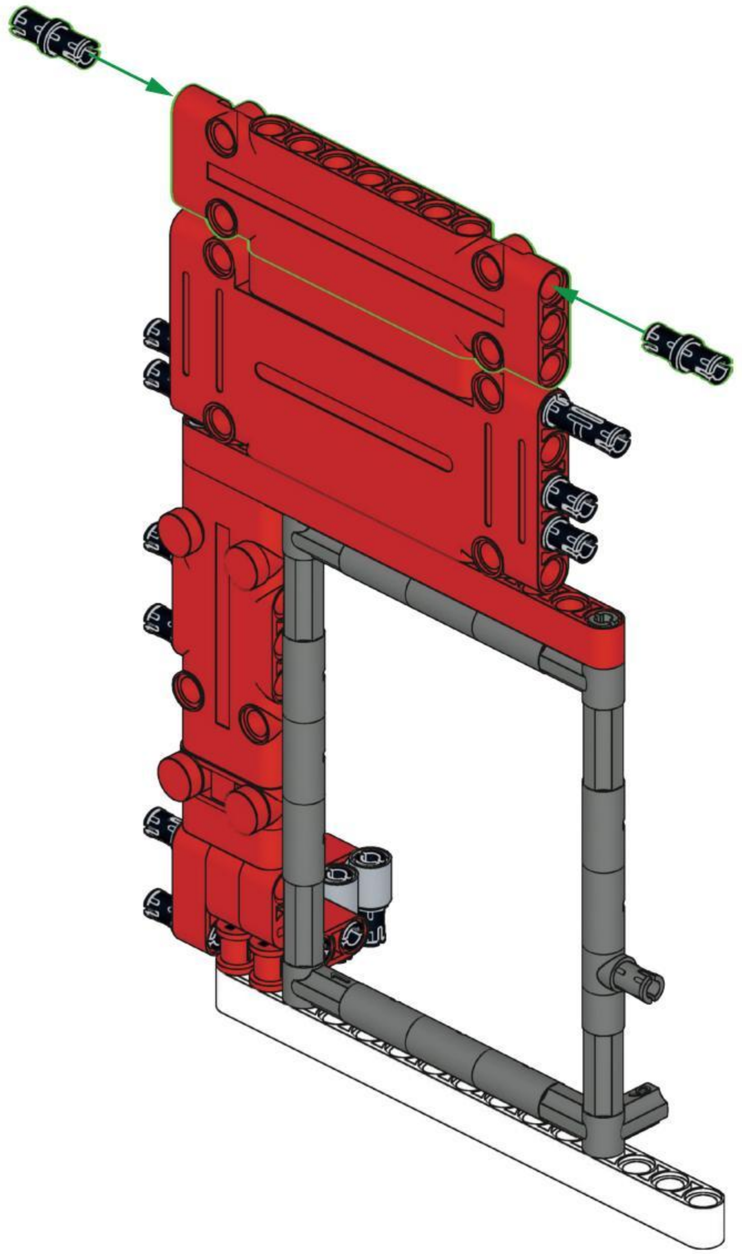

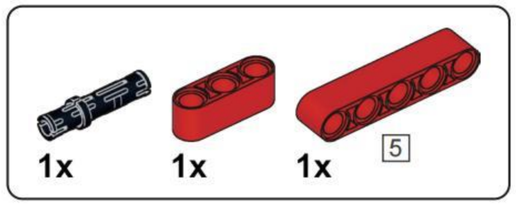


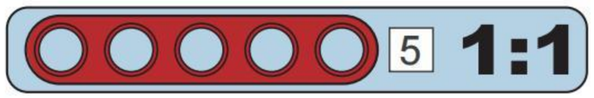


# D118

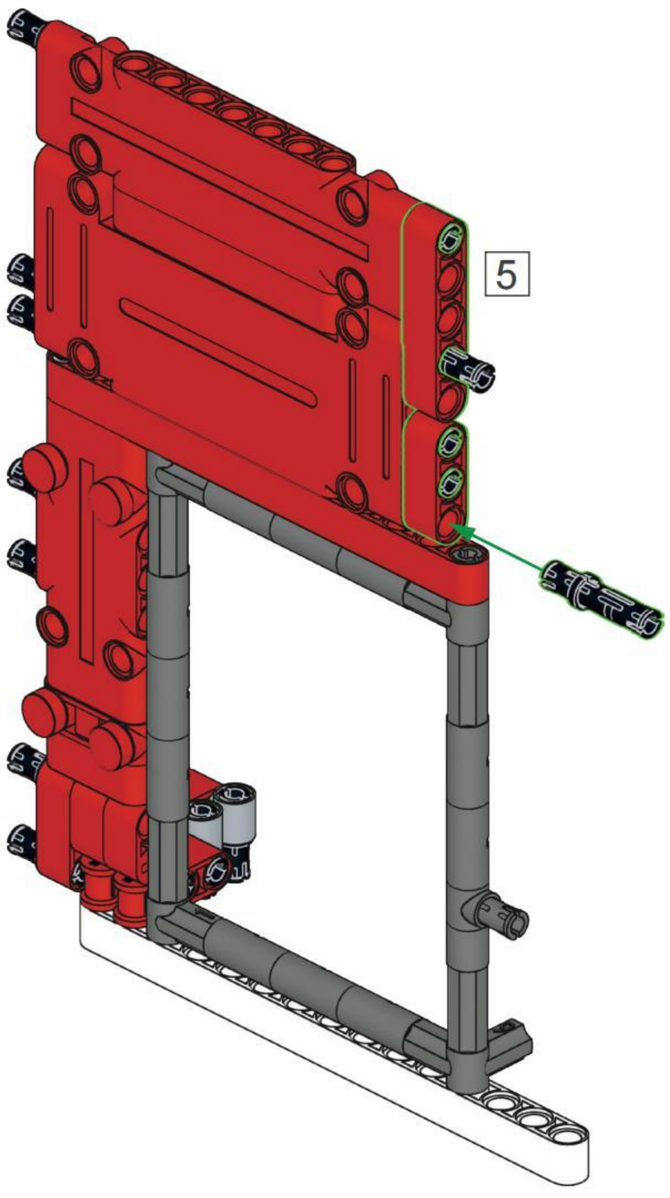


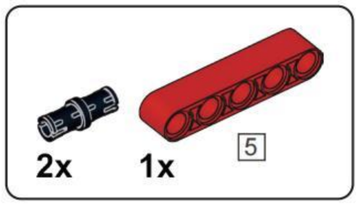


# D119

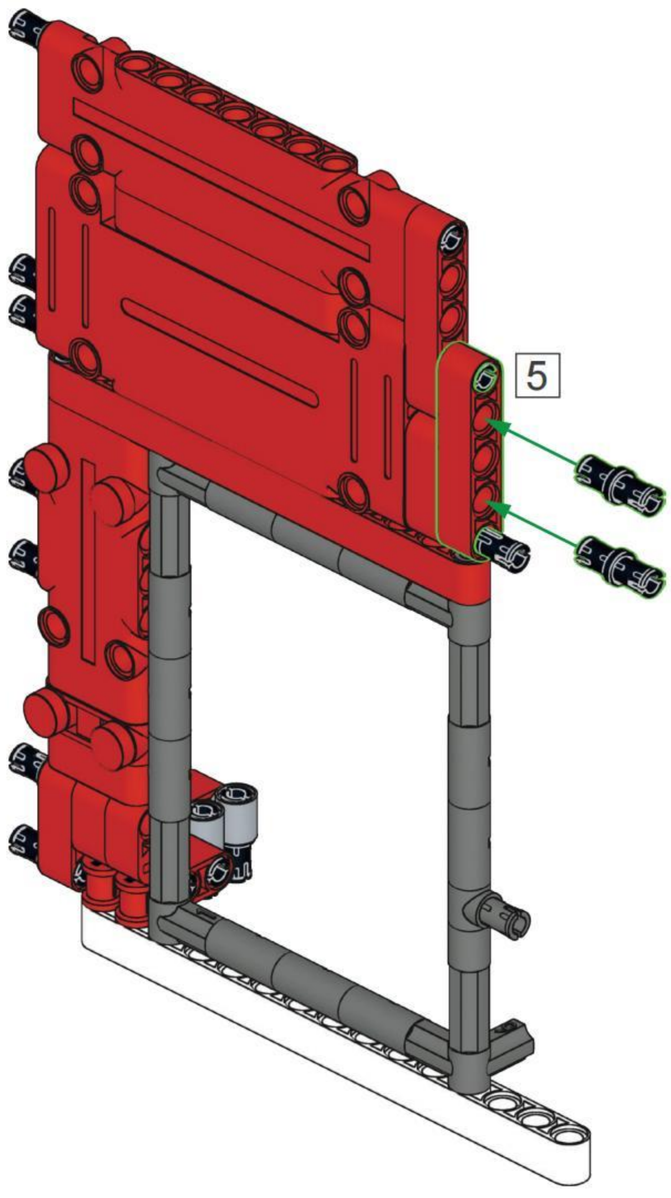

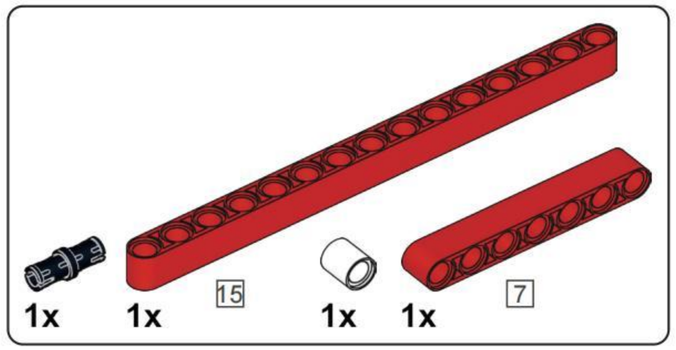


## D120

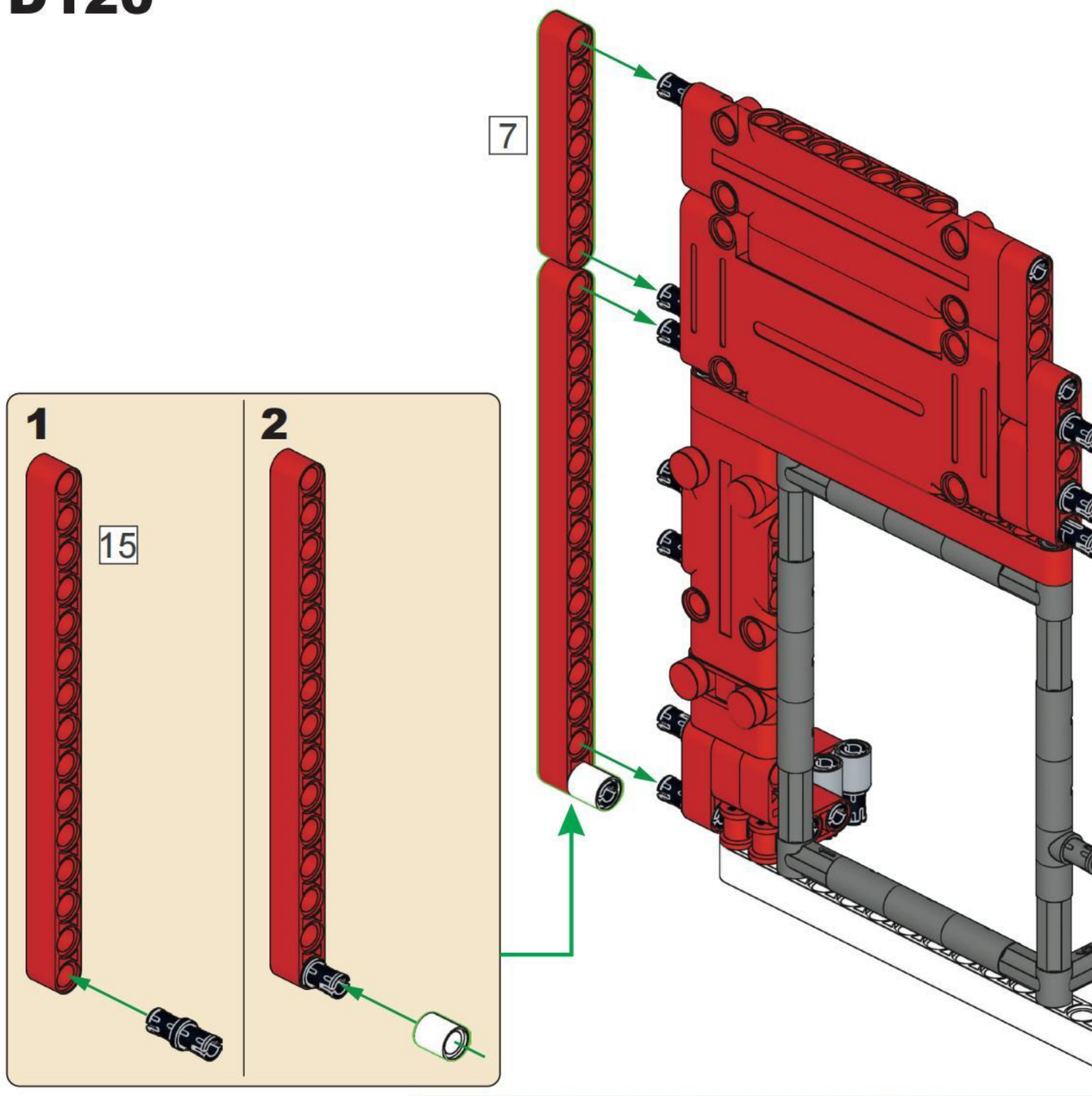


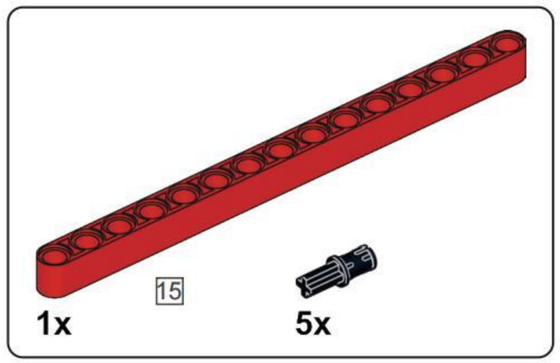


## D121

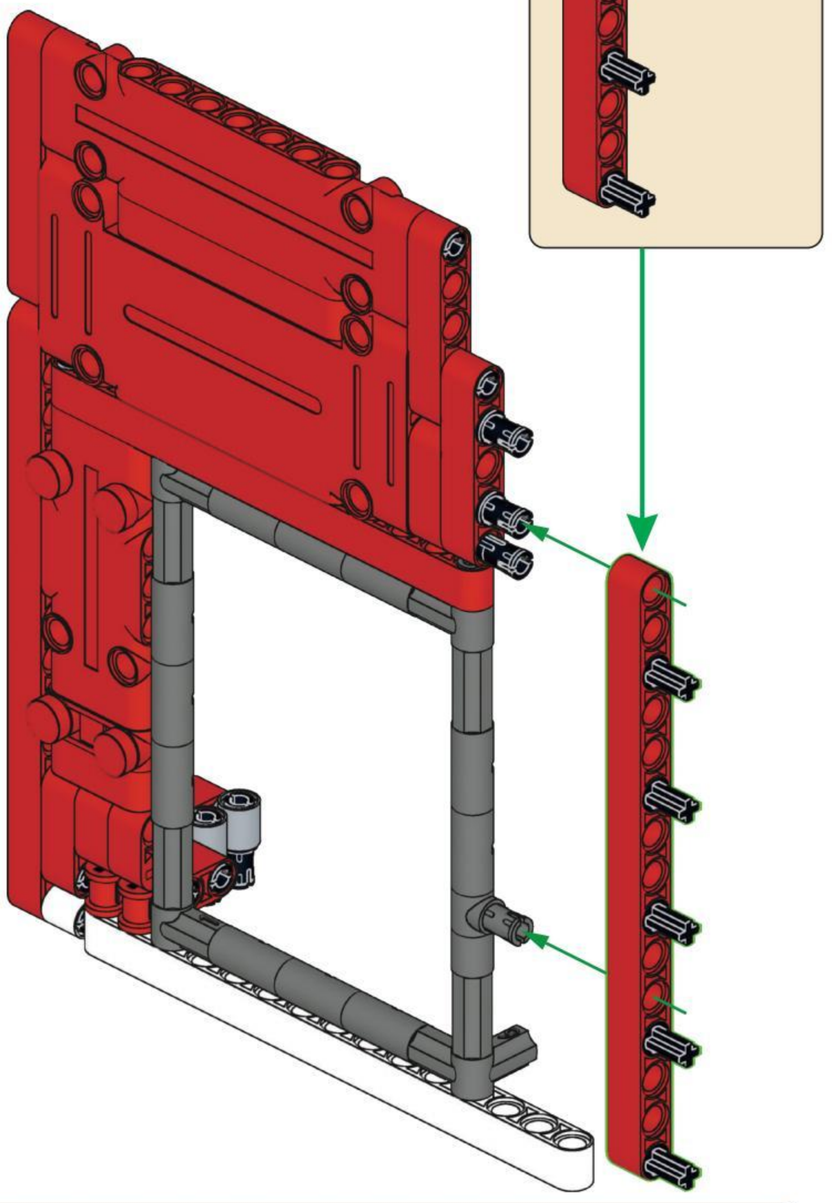


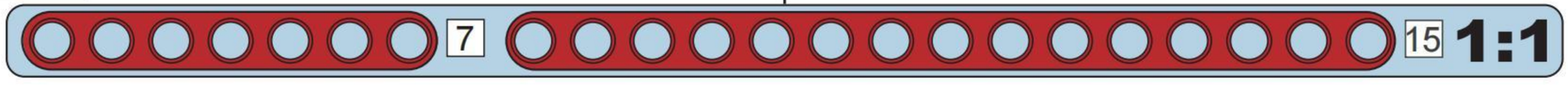

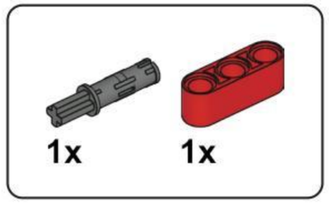


## D122

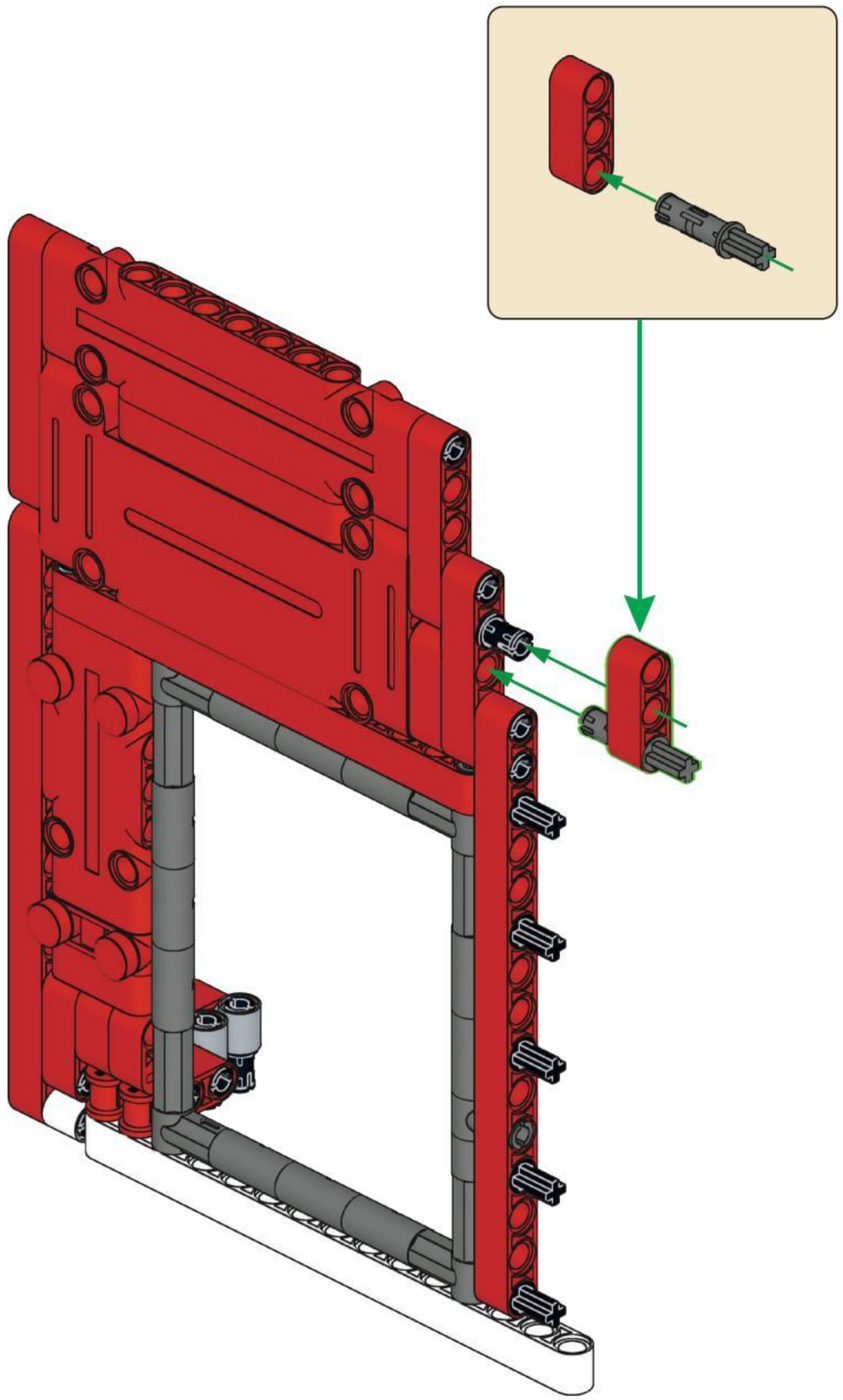

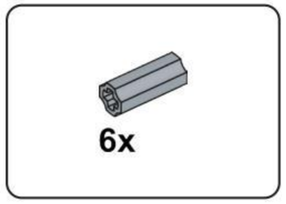


## D123

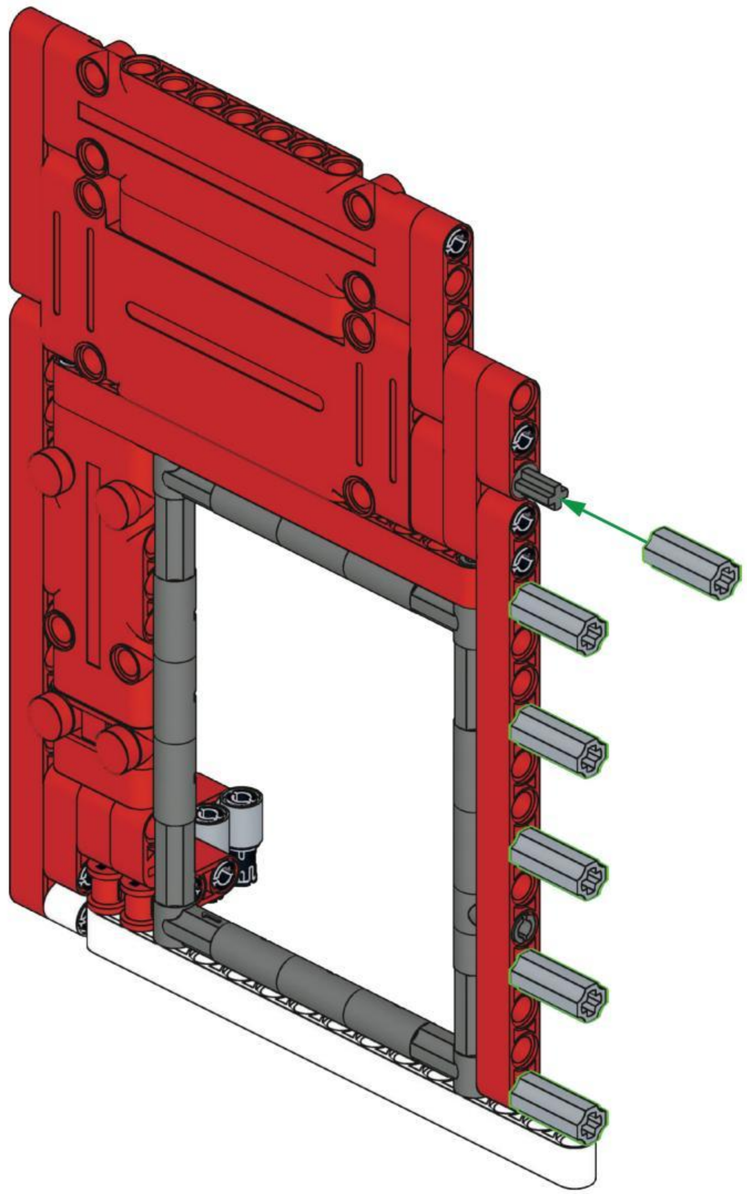

# D124

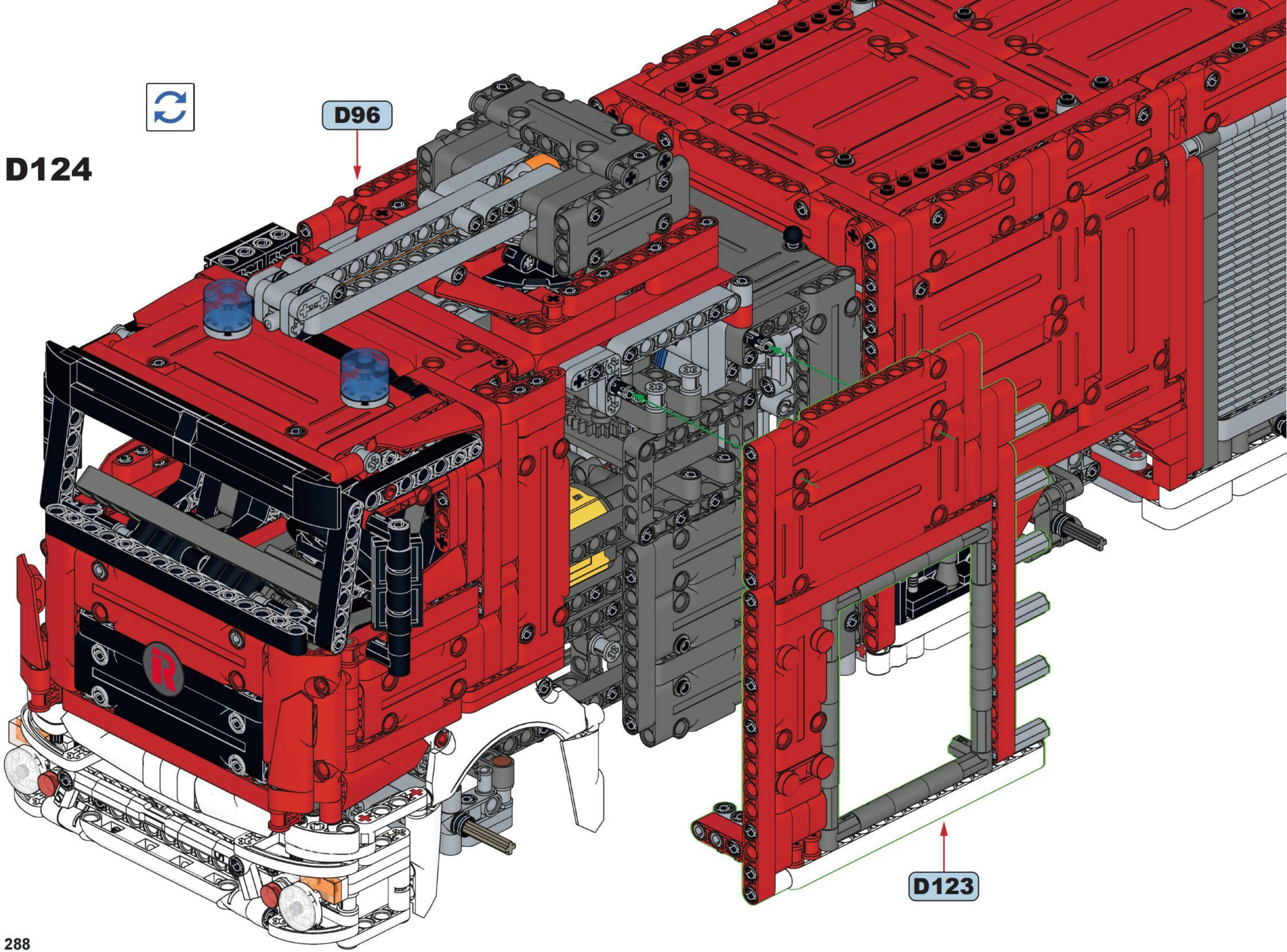

1x 2x

# D125

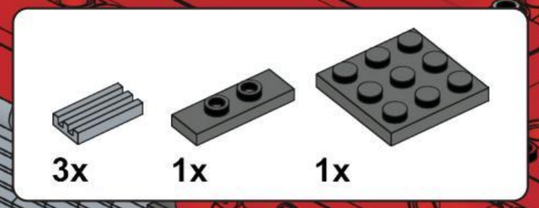


D126

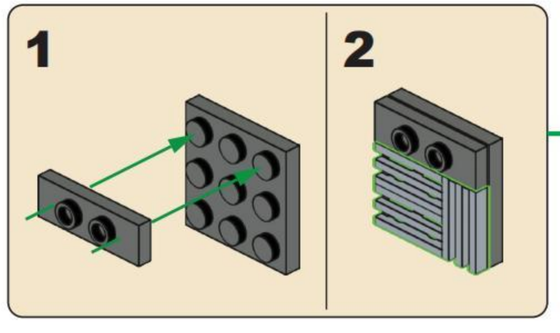

2x

D127

1x 1x 3x

D128

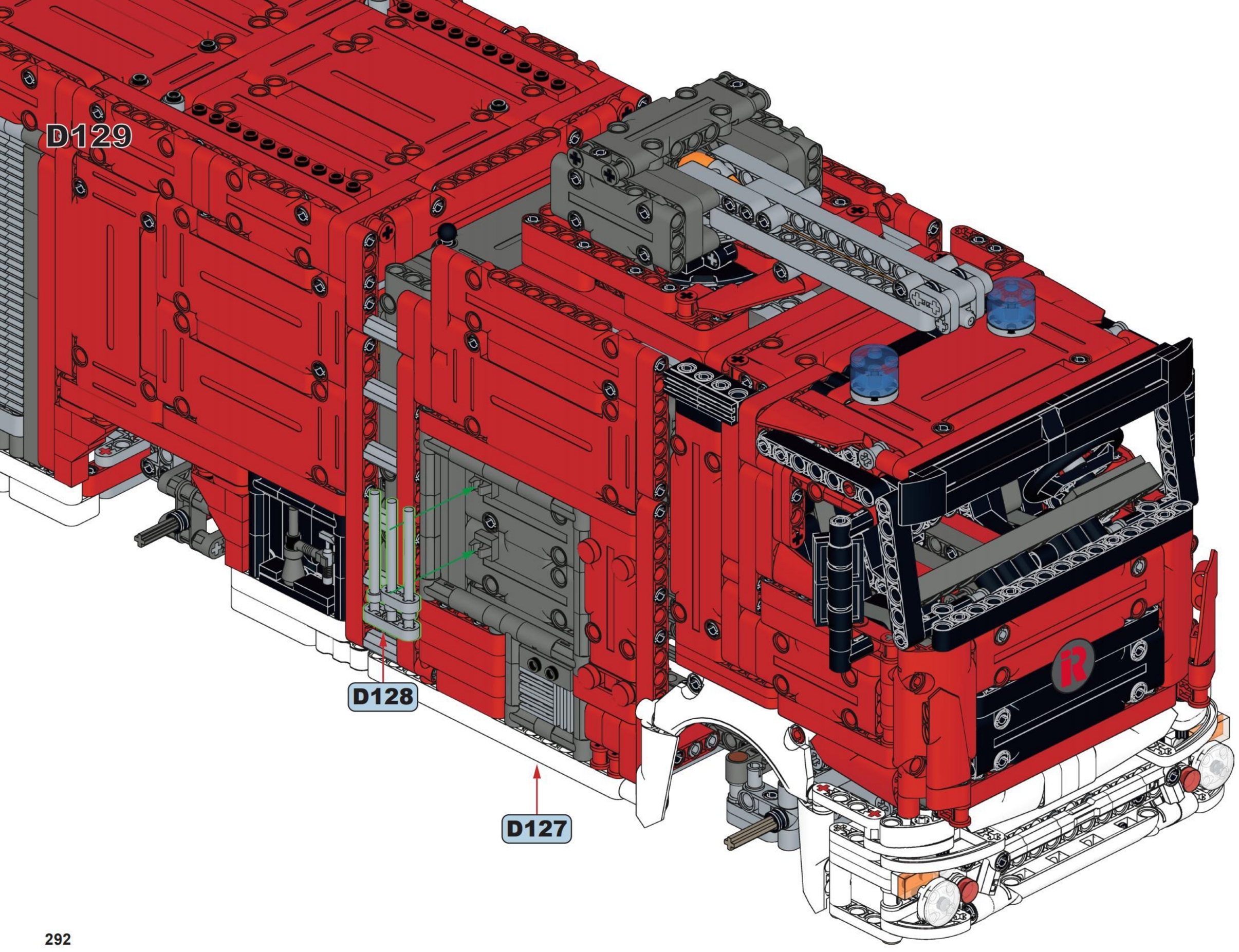
D129
D128
D127

1x 1x

D130

2x 1x

# D131

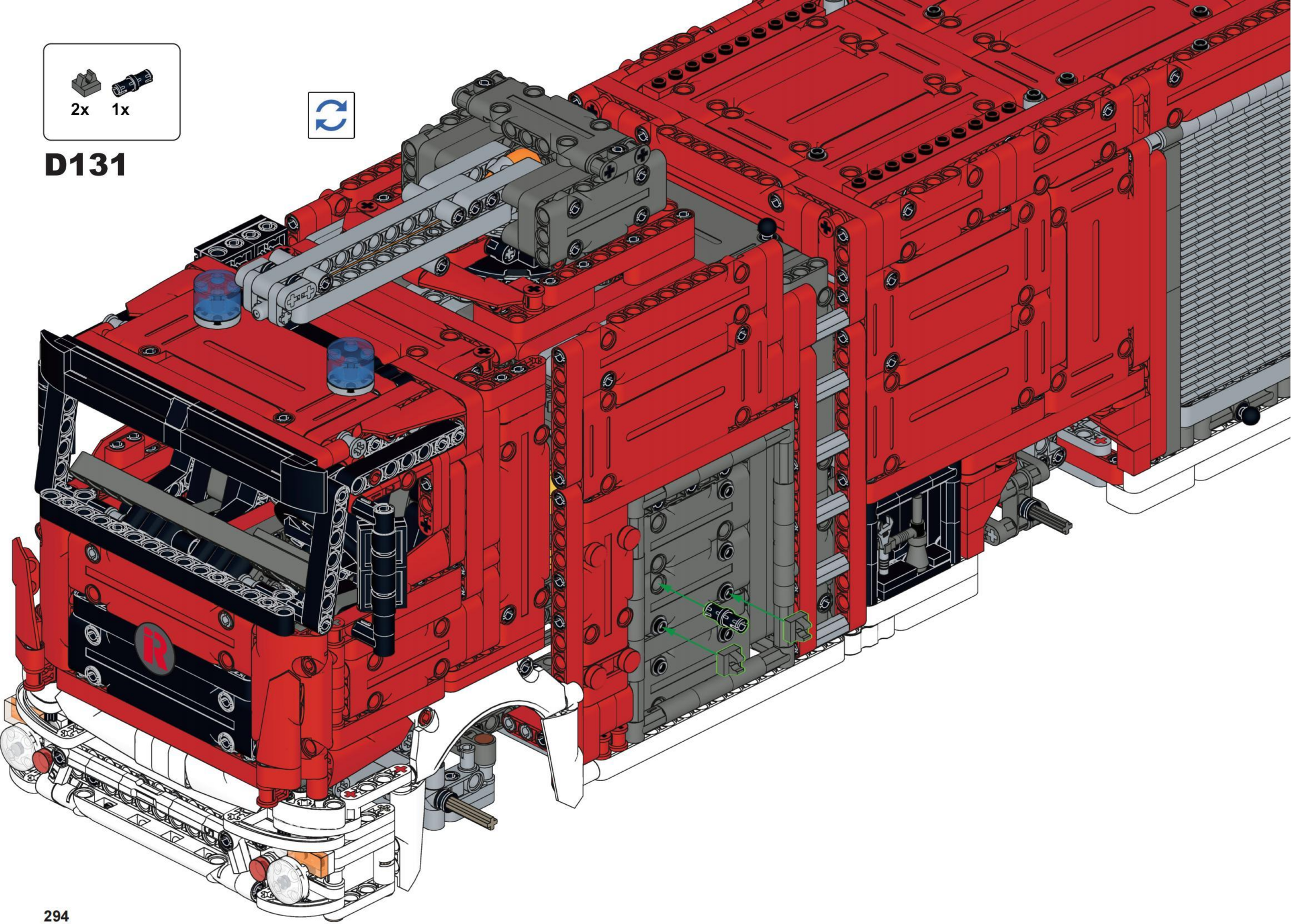

# D132

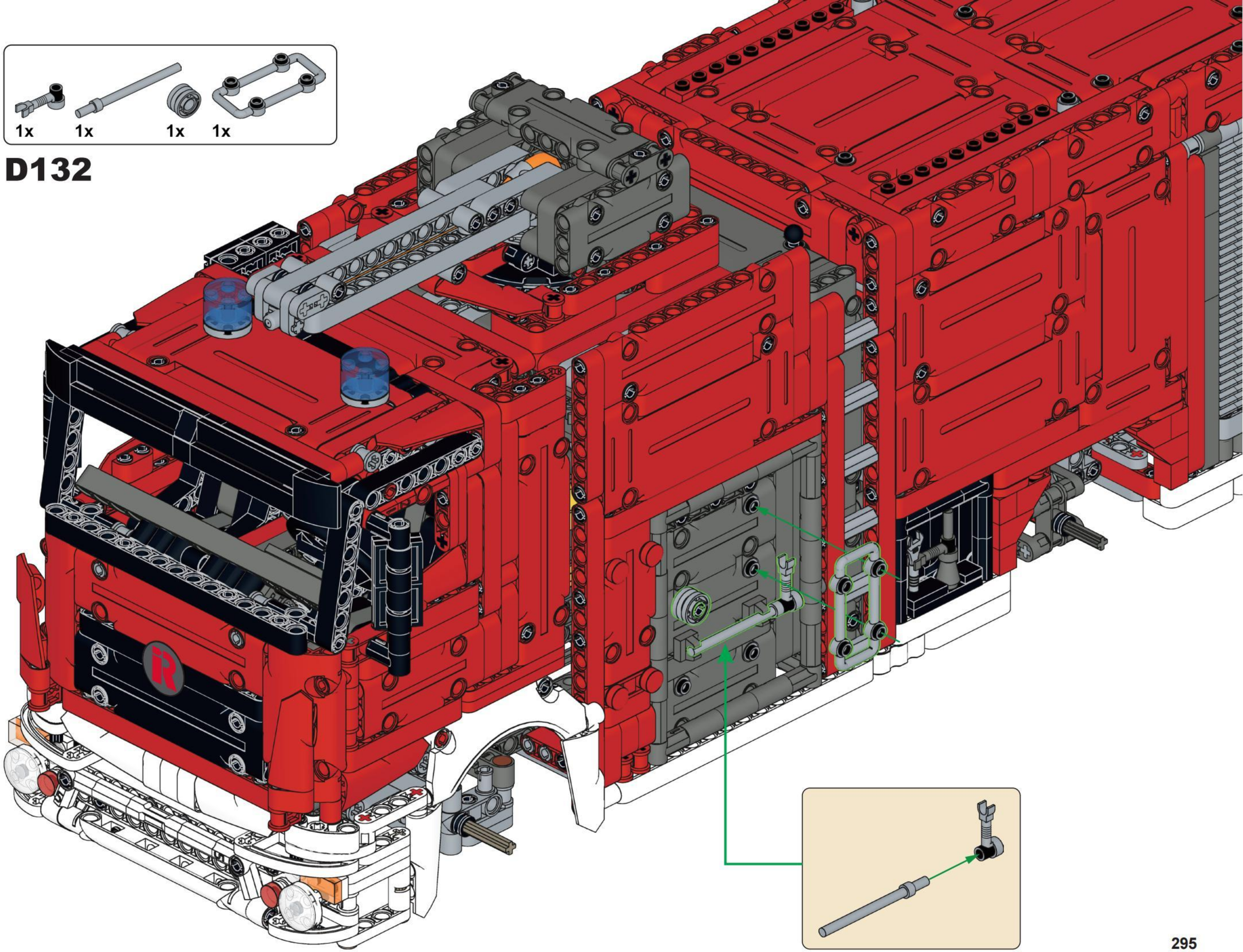

# D133

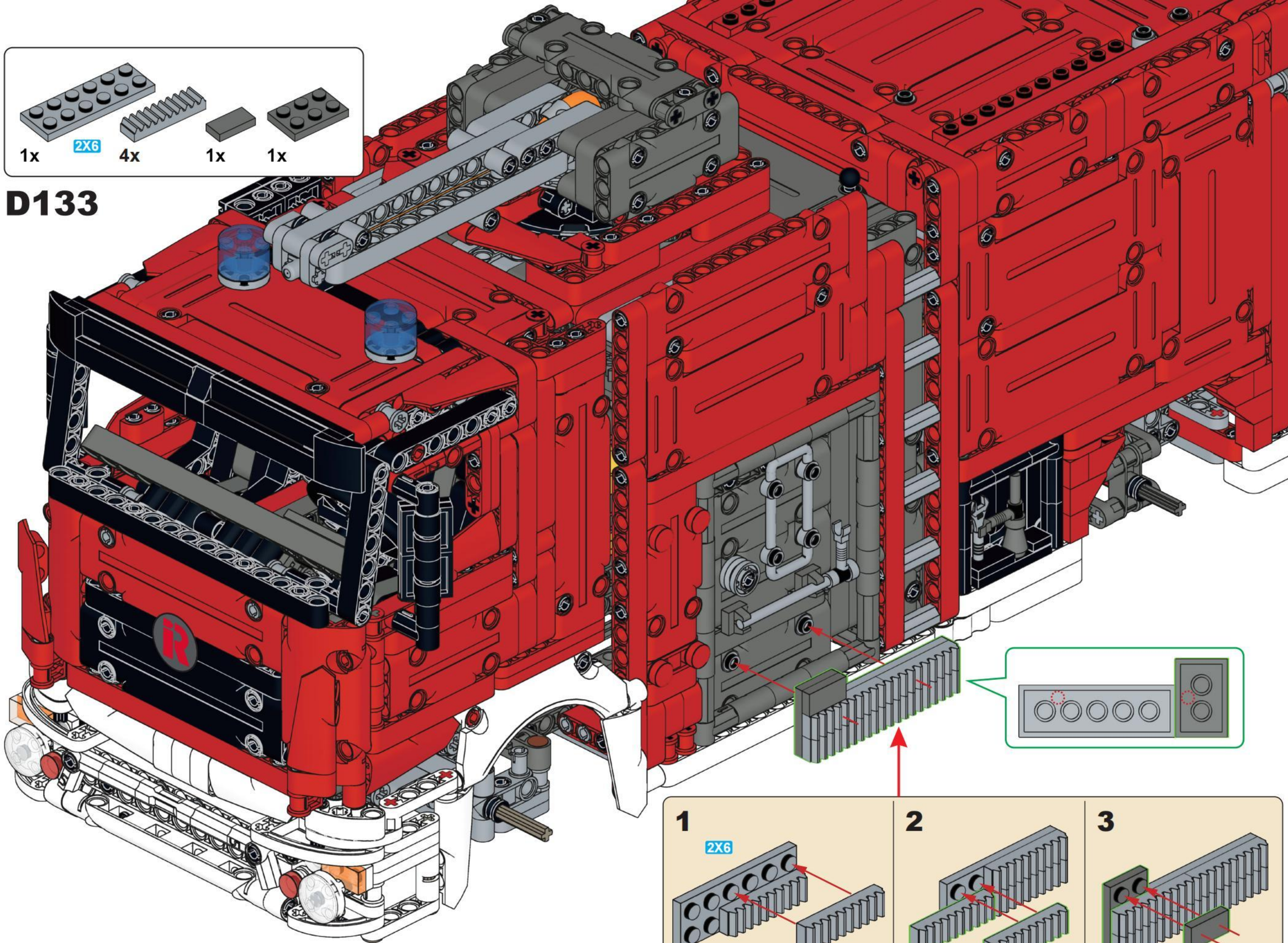

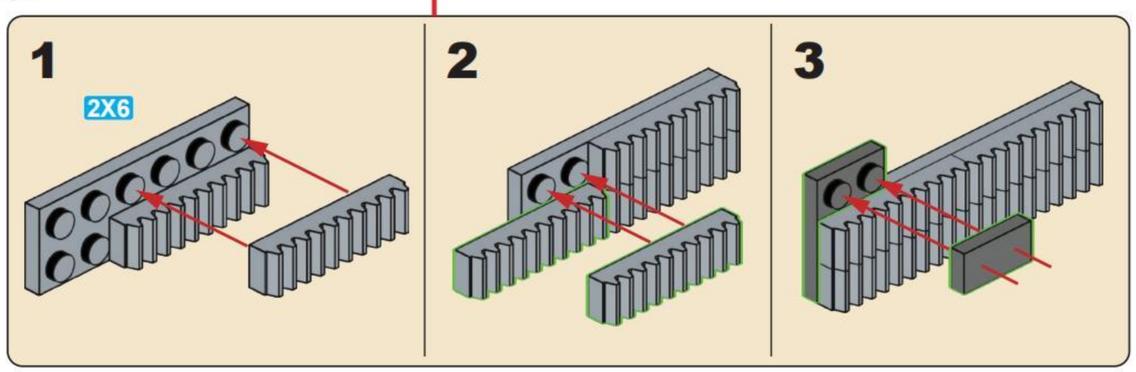

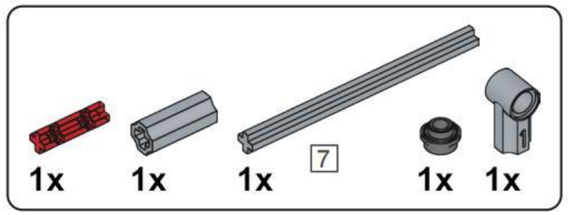


## D134

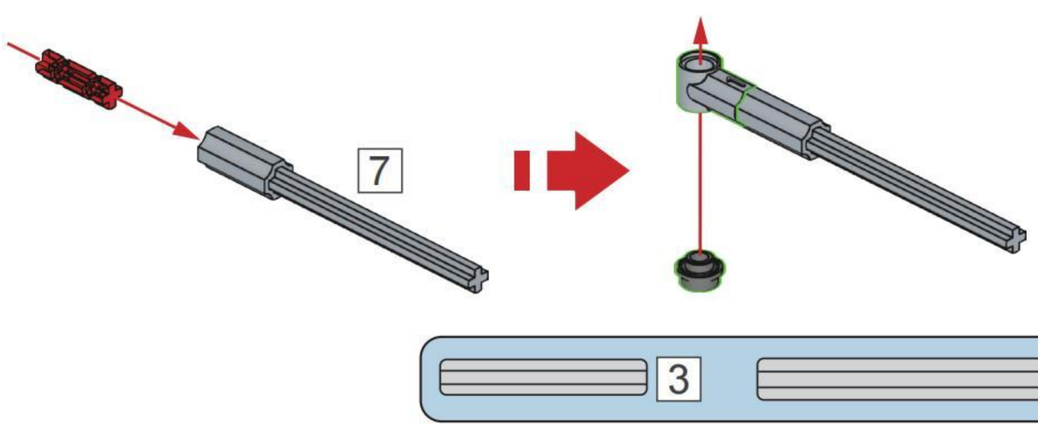


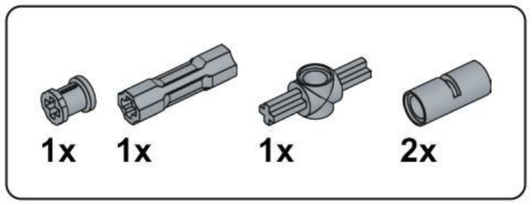


## D135

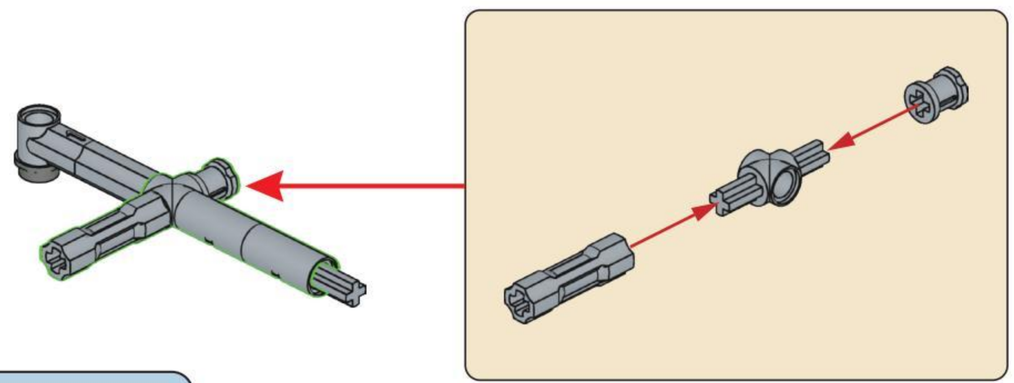

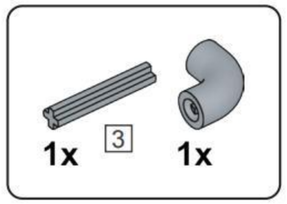


## D136

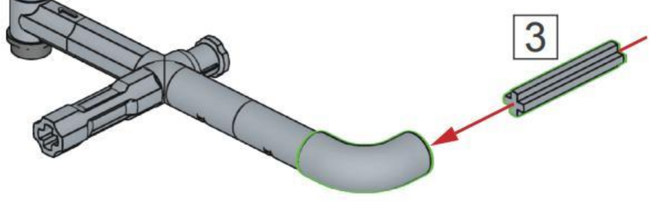


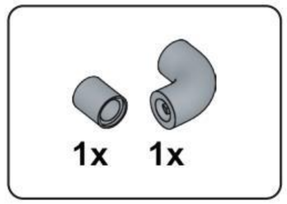


## D137

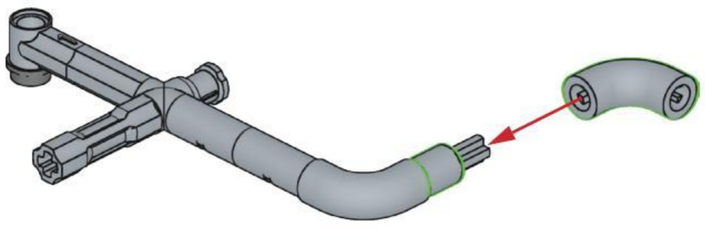

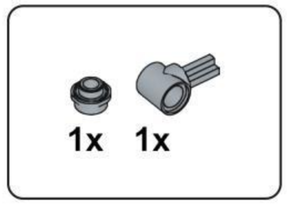


## D138

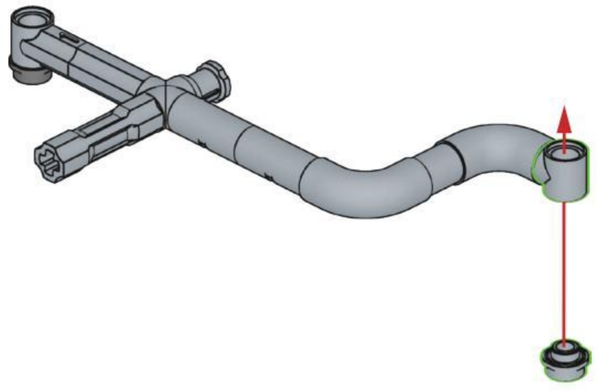

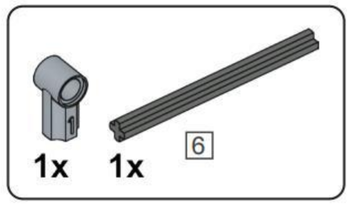


## D139

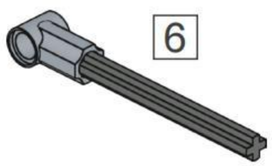

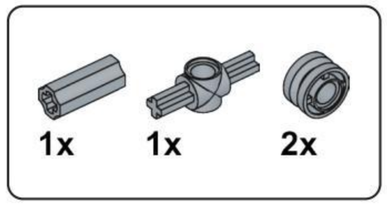


## D140

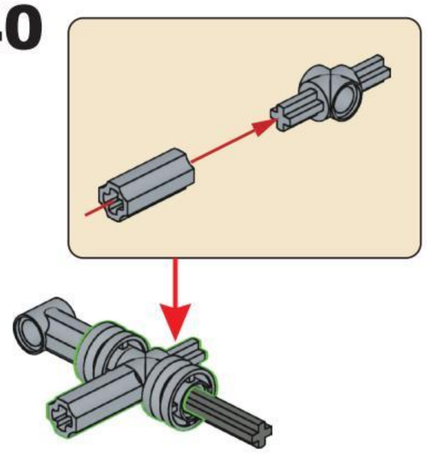

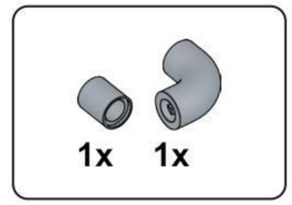


## D141

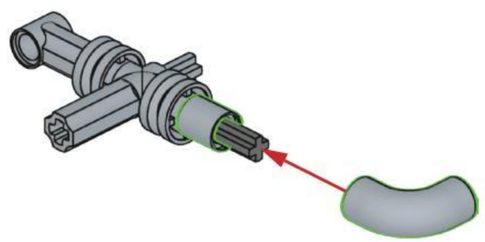

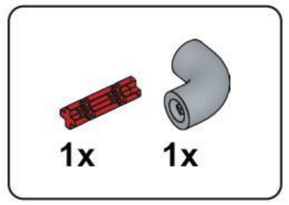


## D142

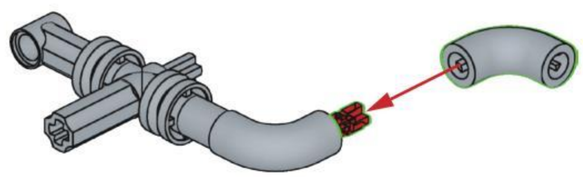

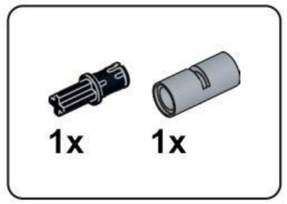


## D143

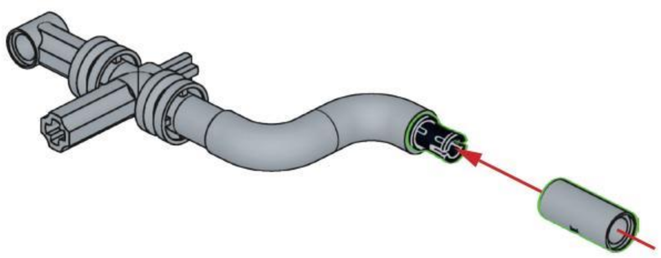

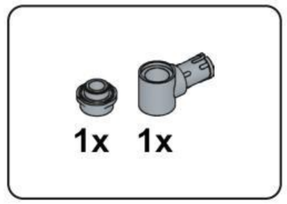


## D144

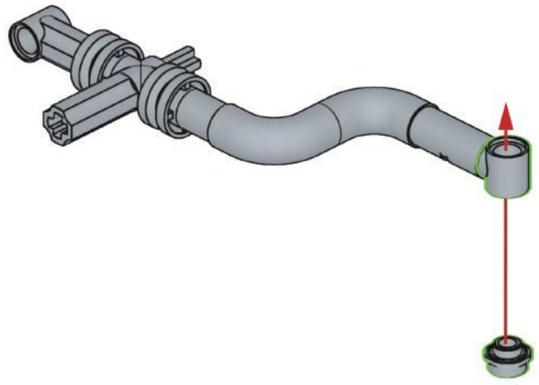

## D145

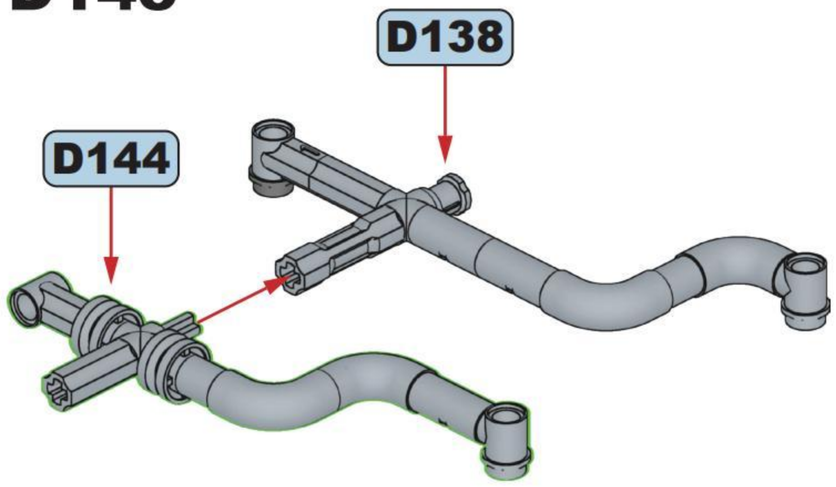

# D146

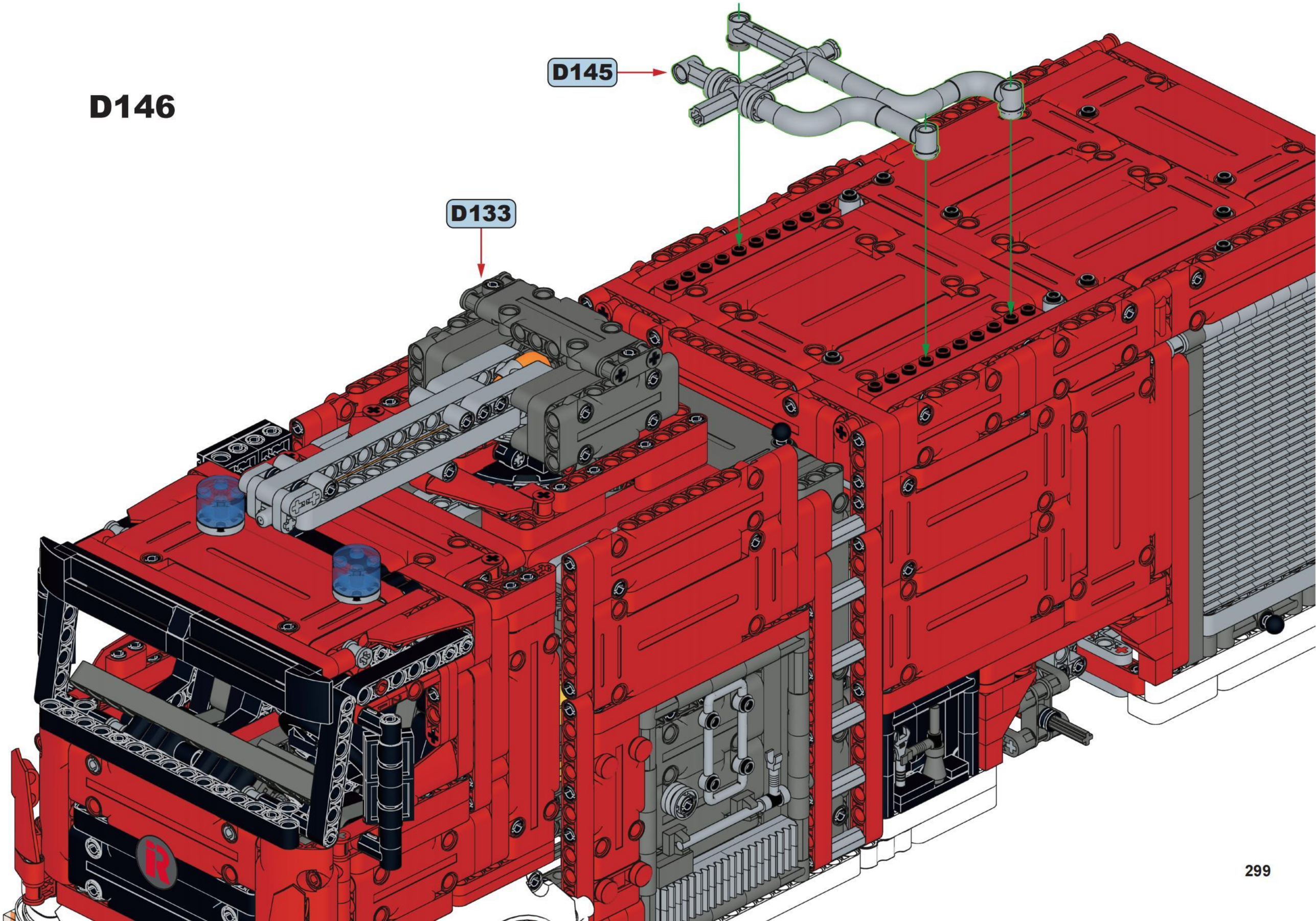

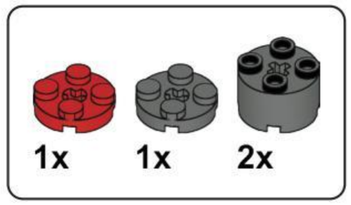


# D147

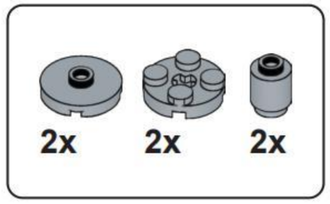


**D148**

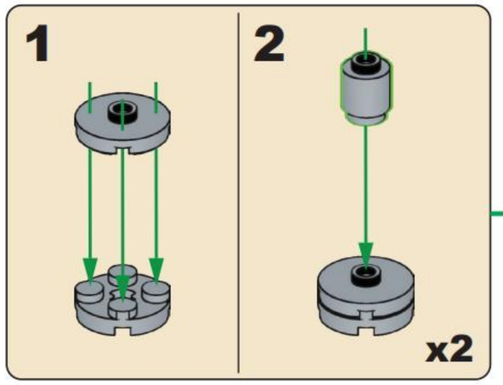

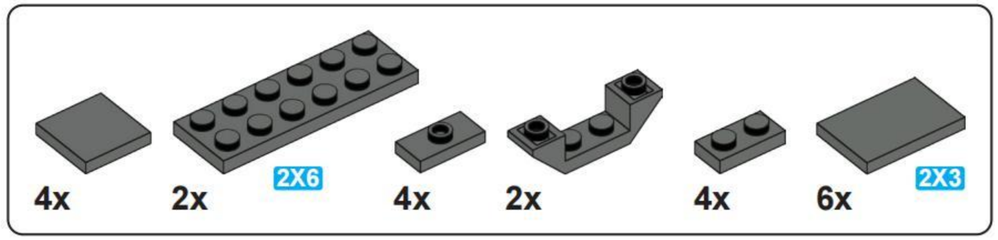


## D149

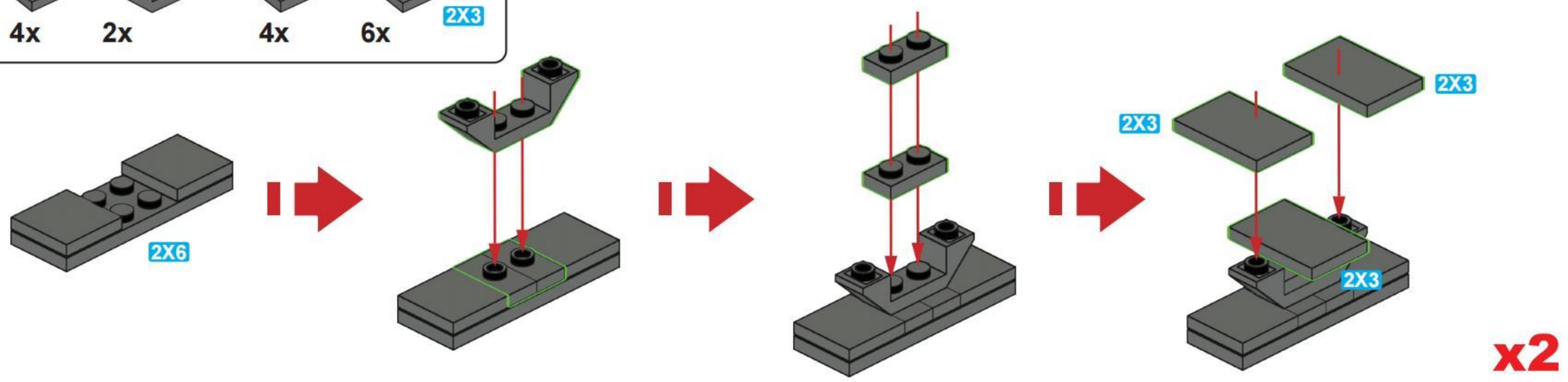


x2

## D150

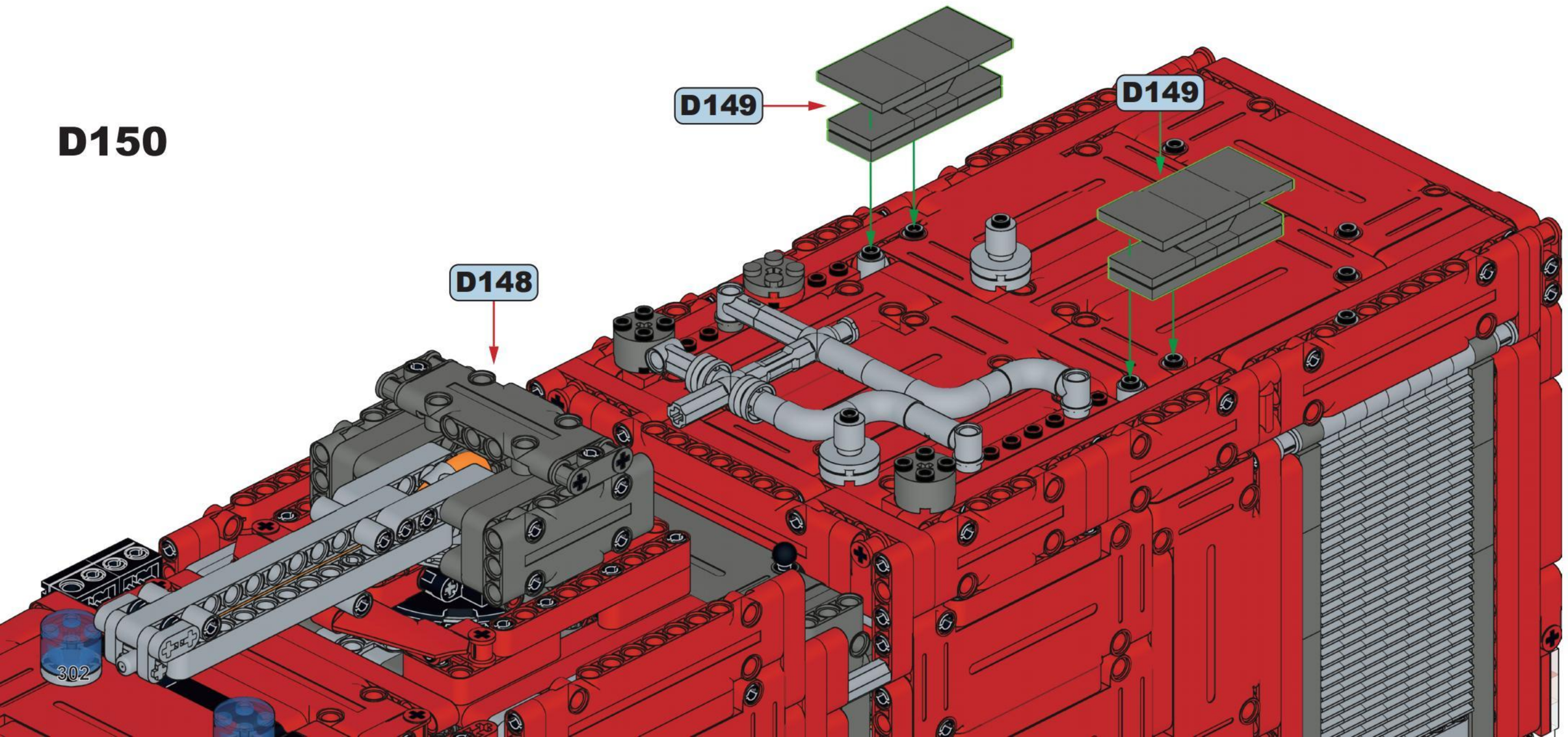

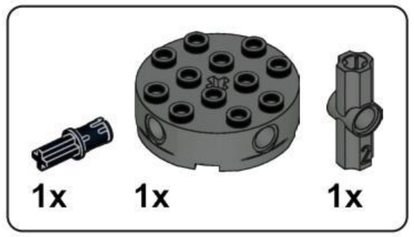


# D151

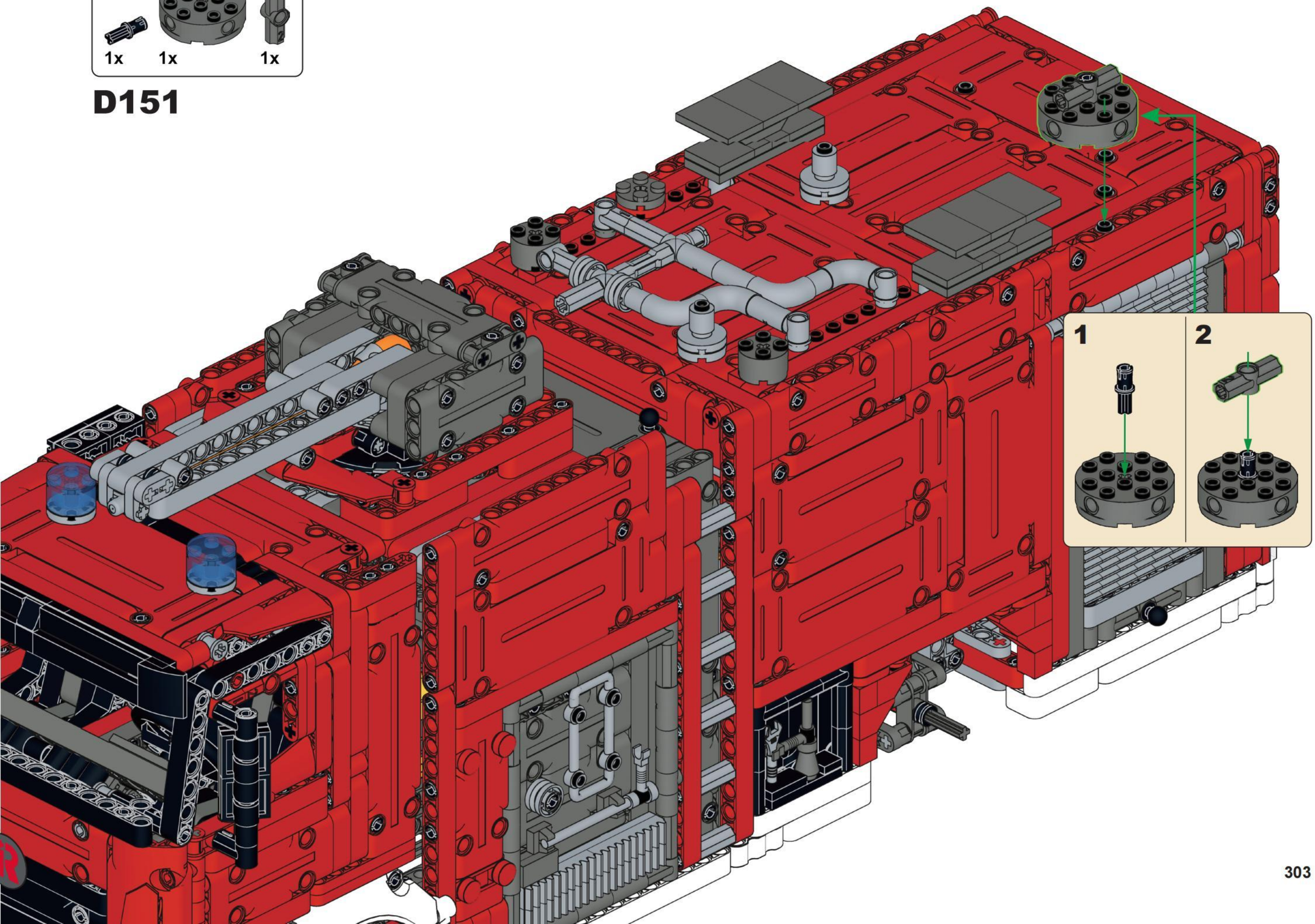

2x

# D152

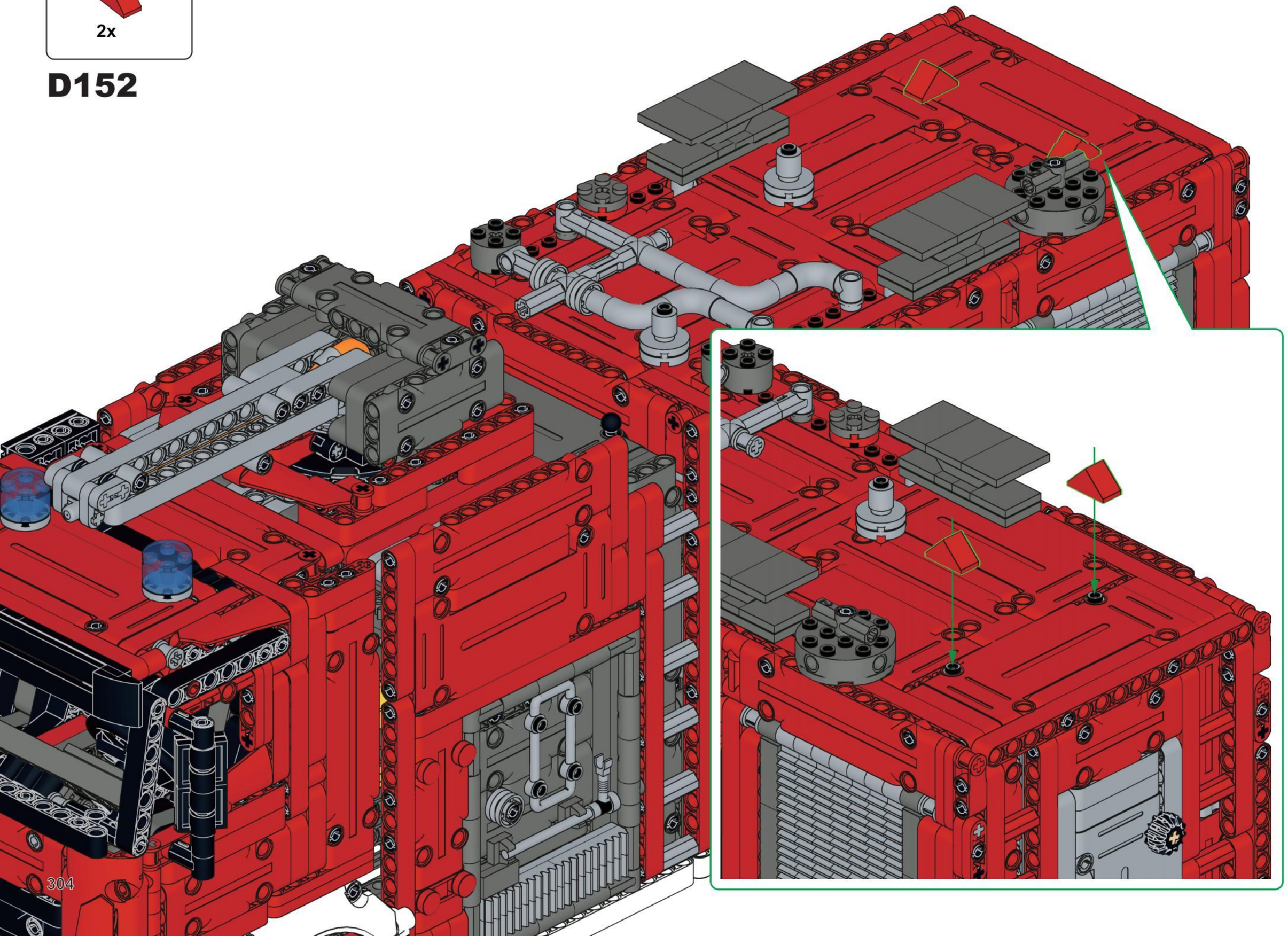

D153



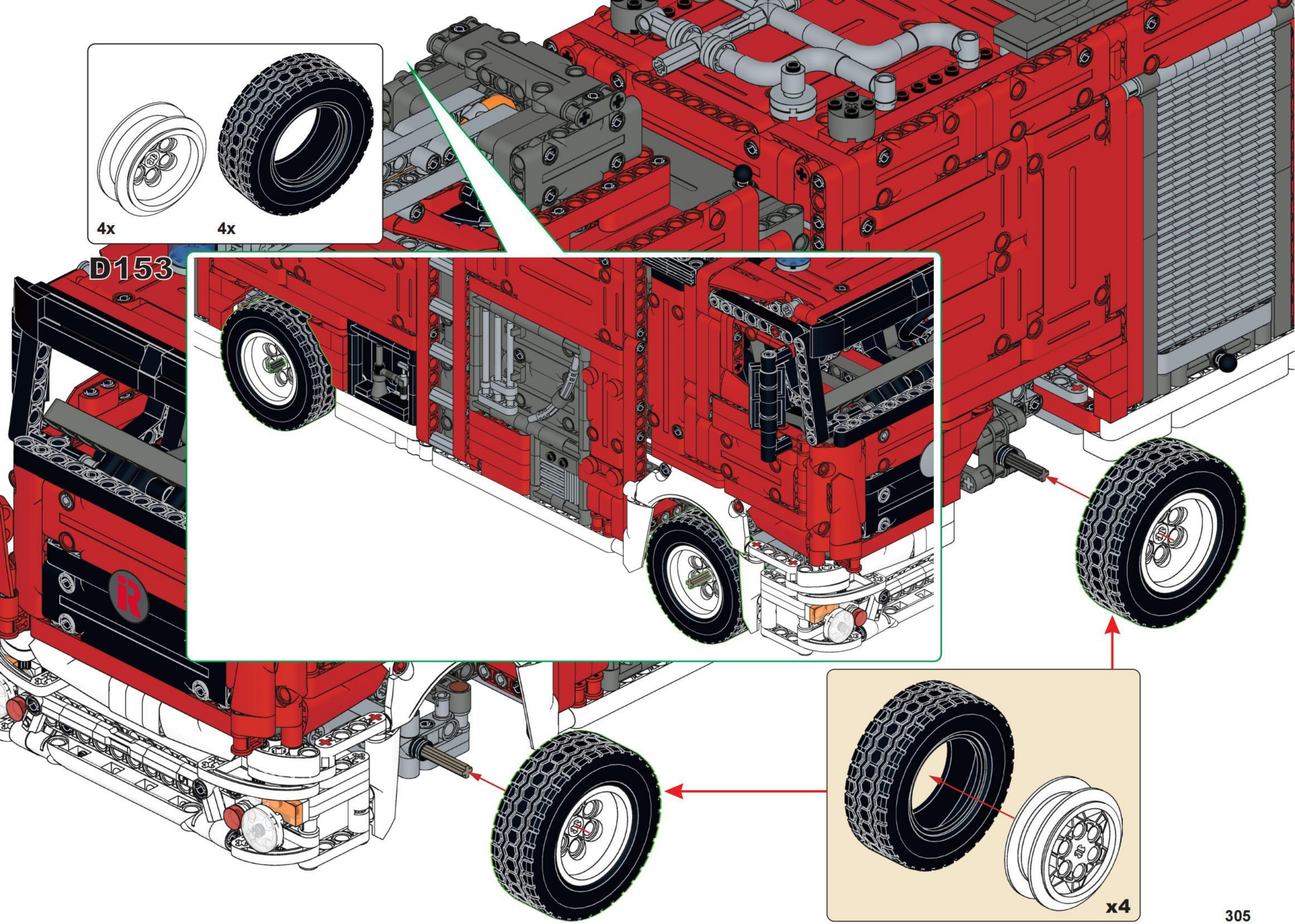

4x

**D154**

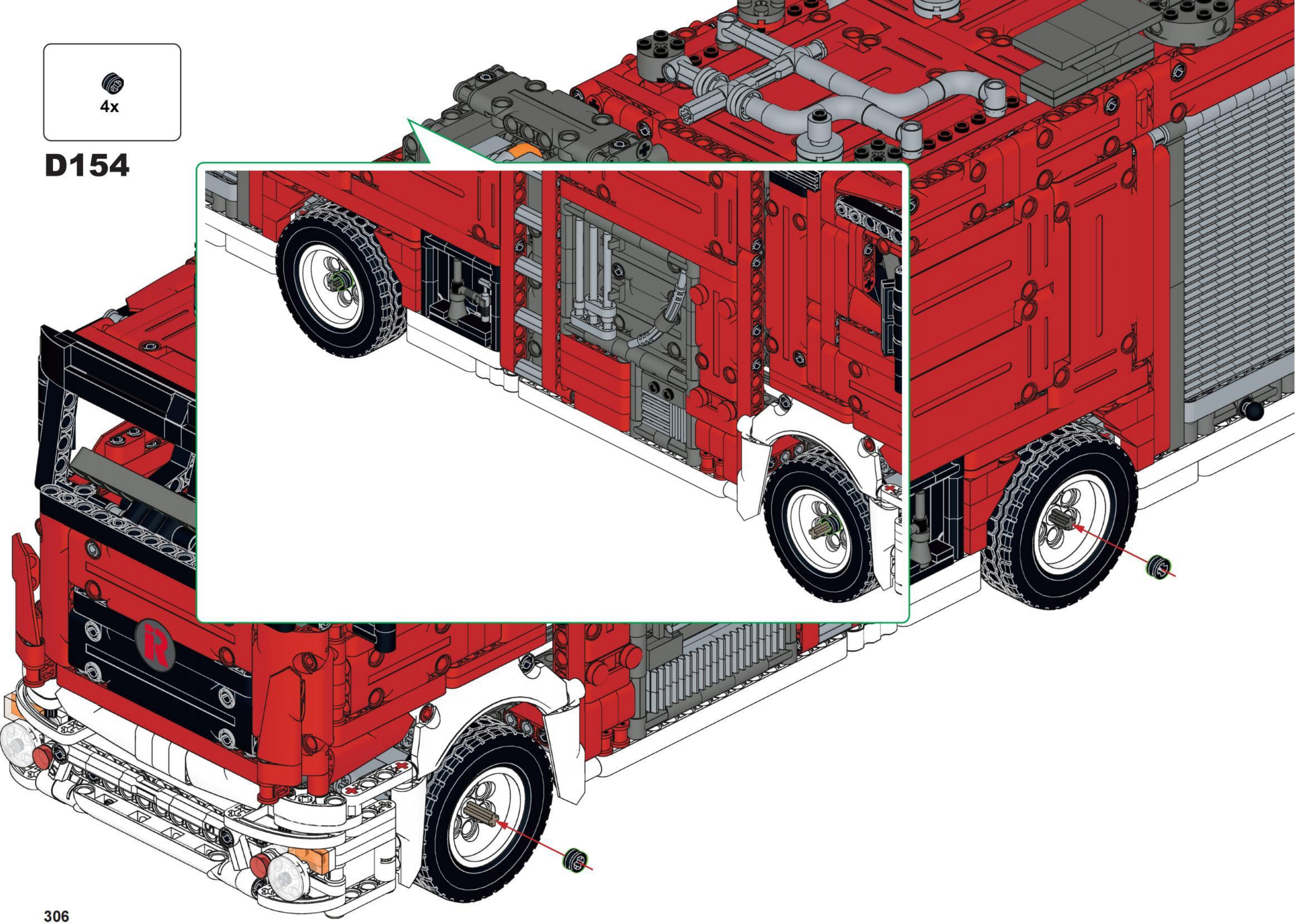

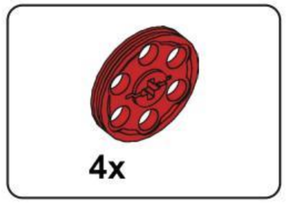


**D155**

# 1

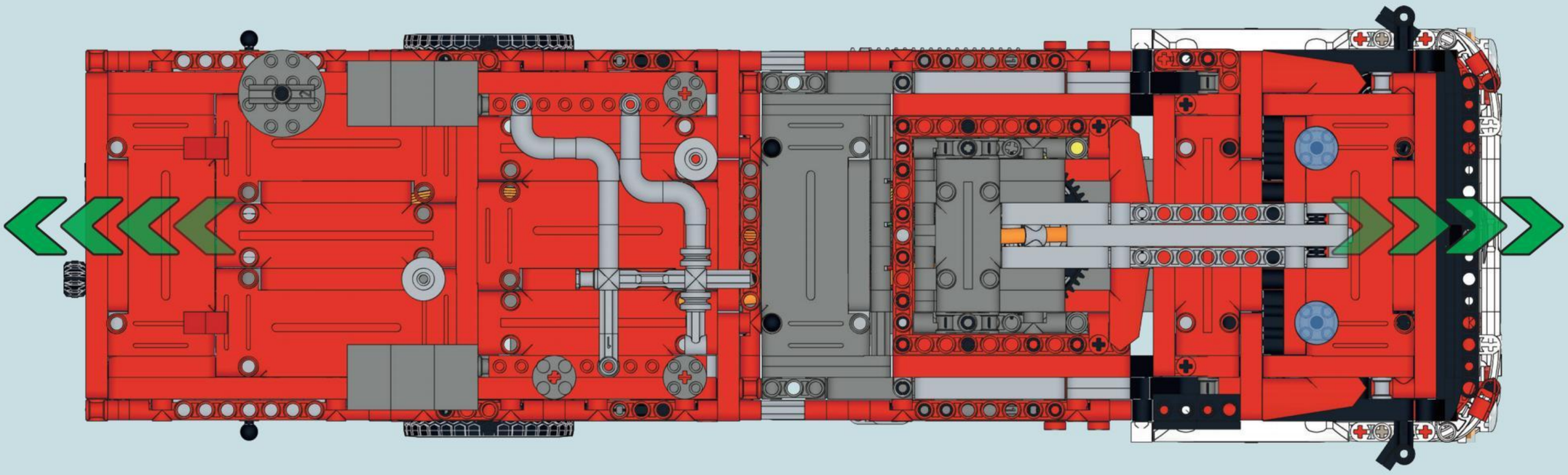

# 2

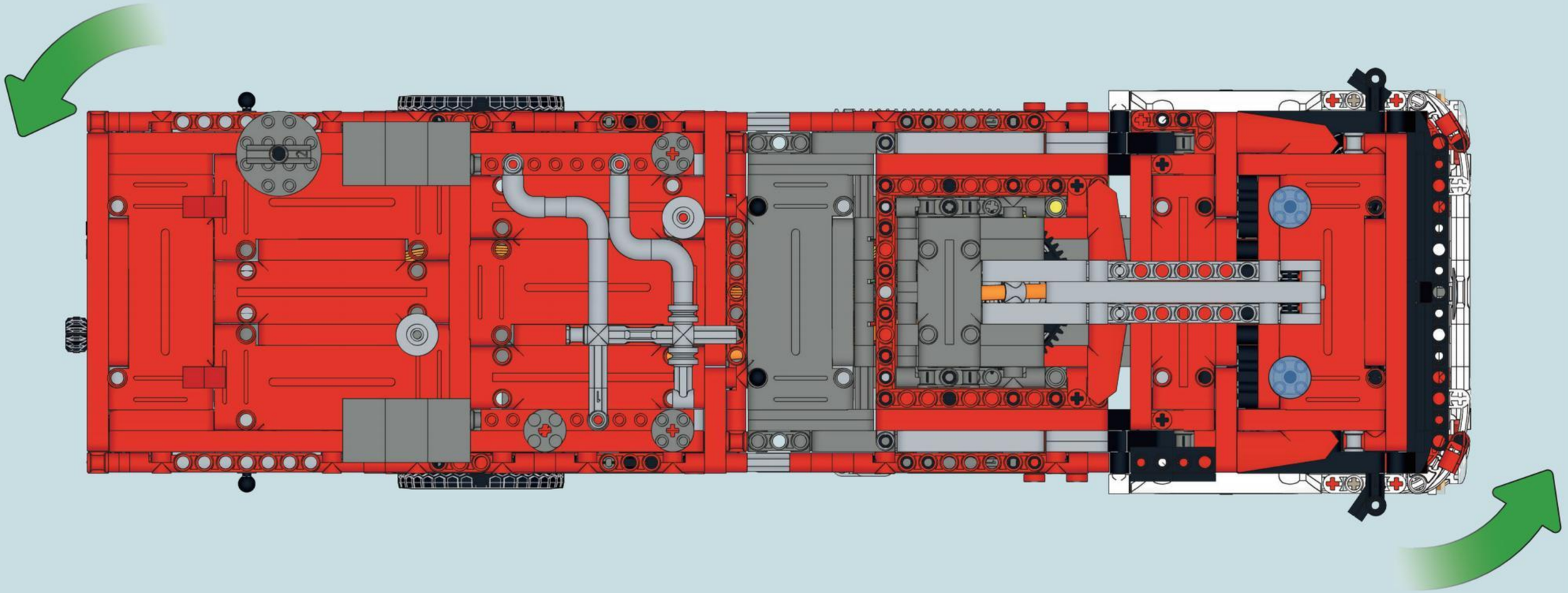

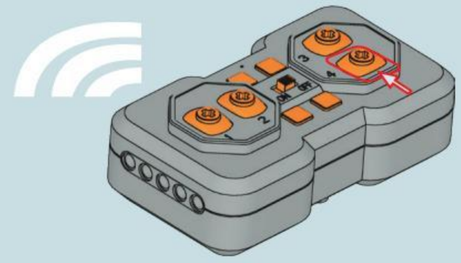

# 3

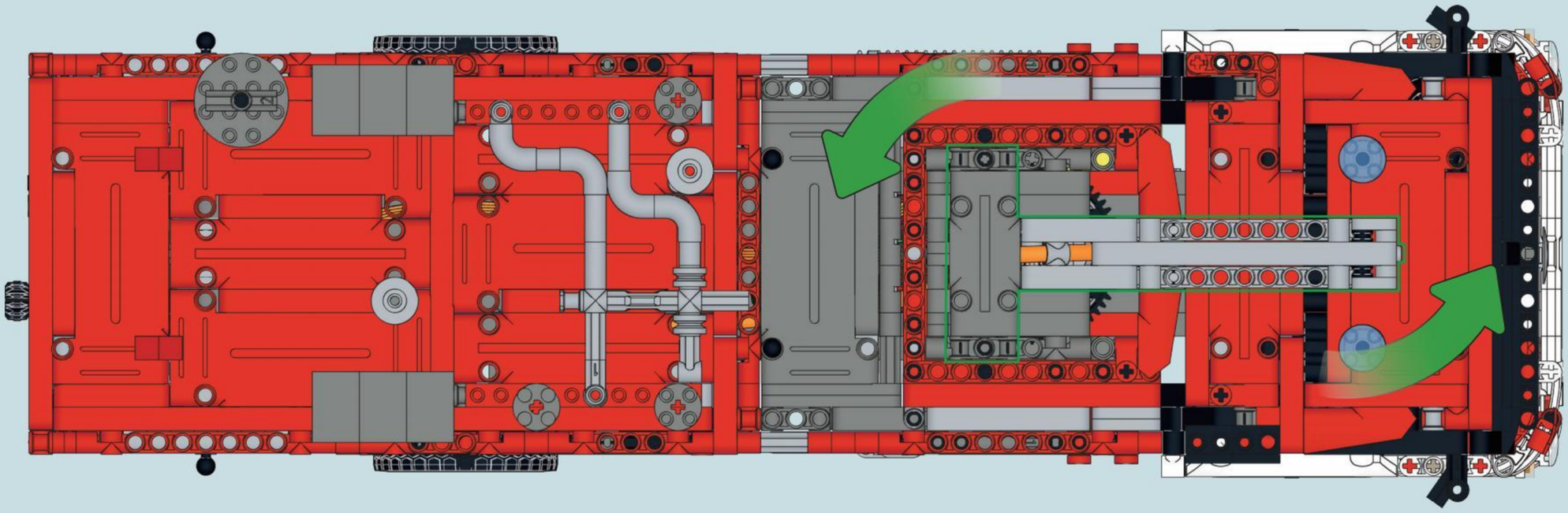

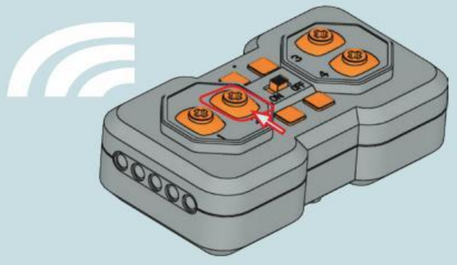

# 4

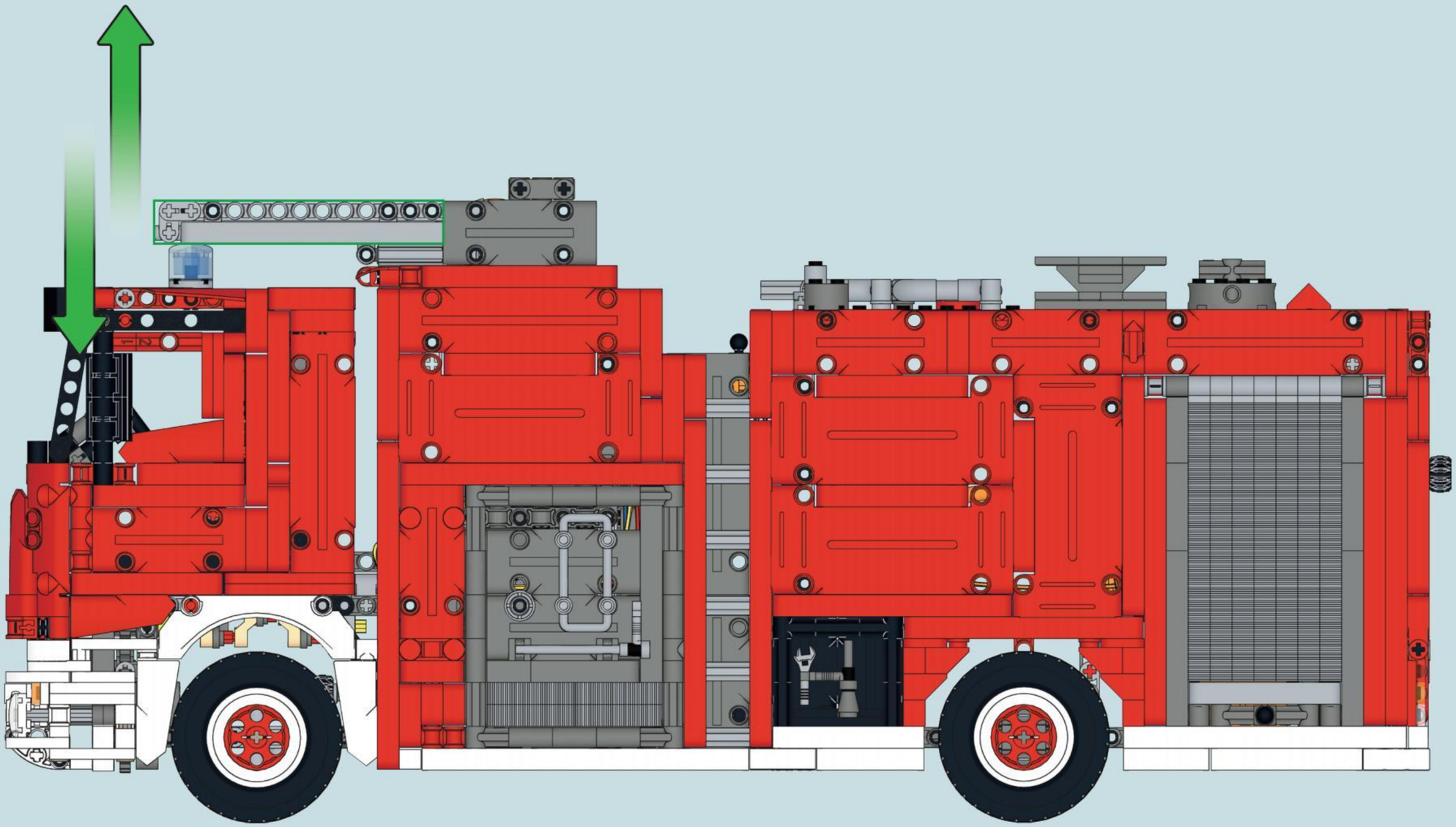

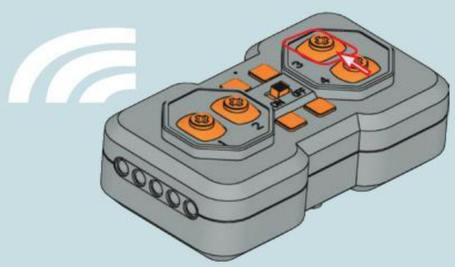

# 5

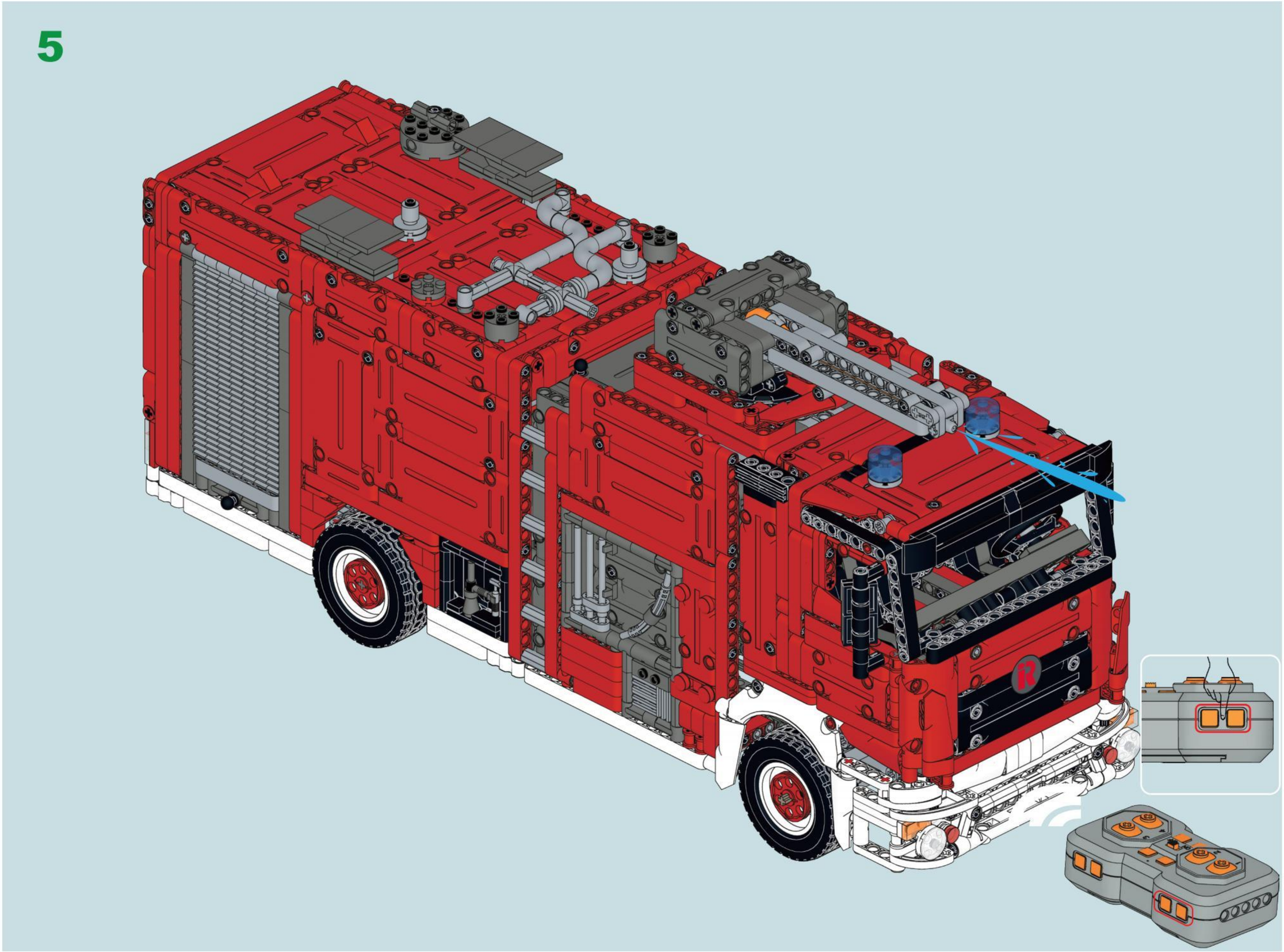

# 6

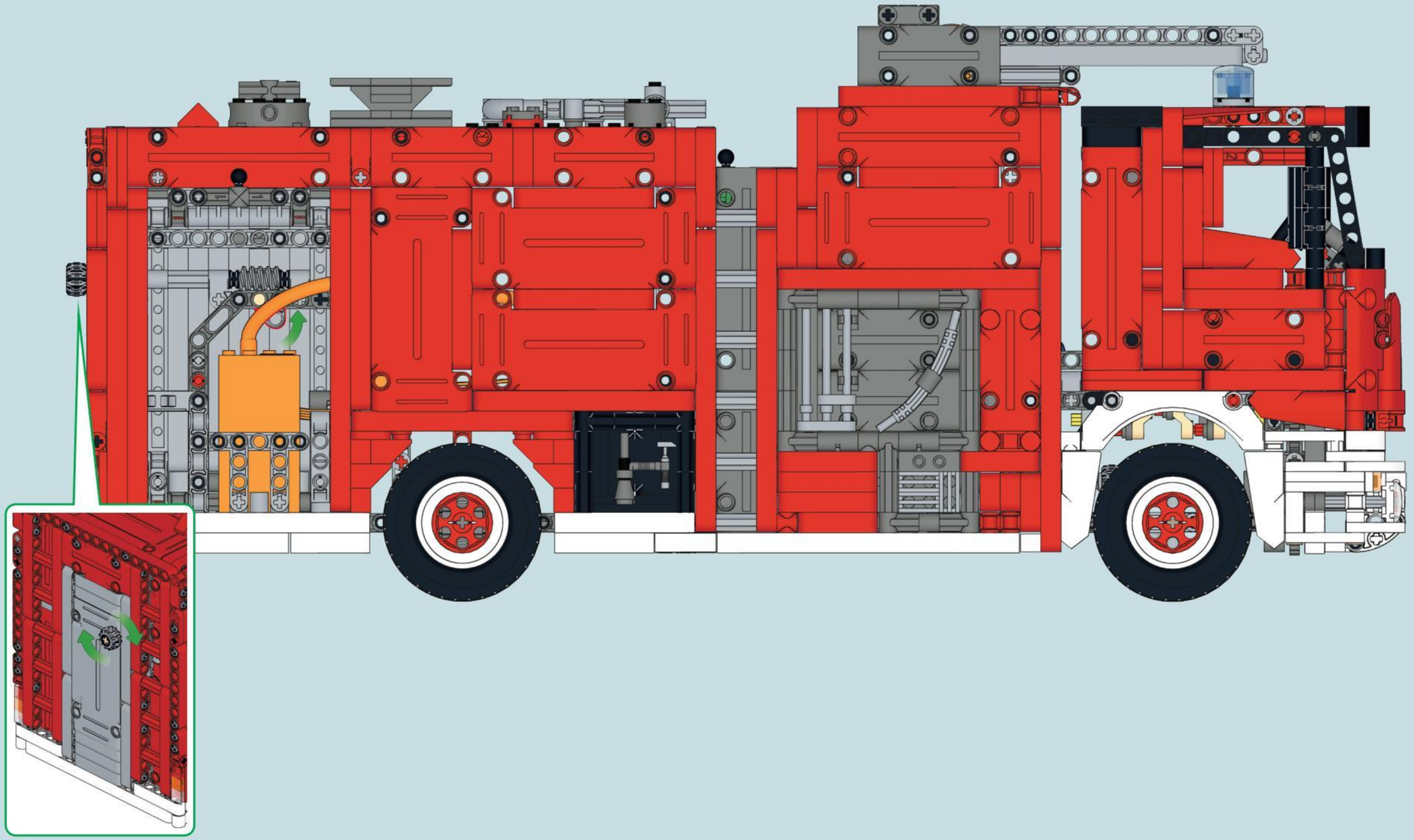

# 7

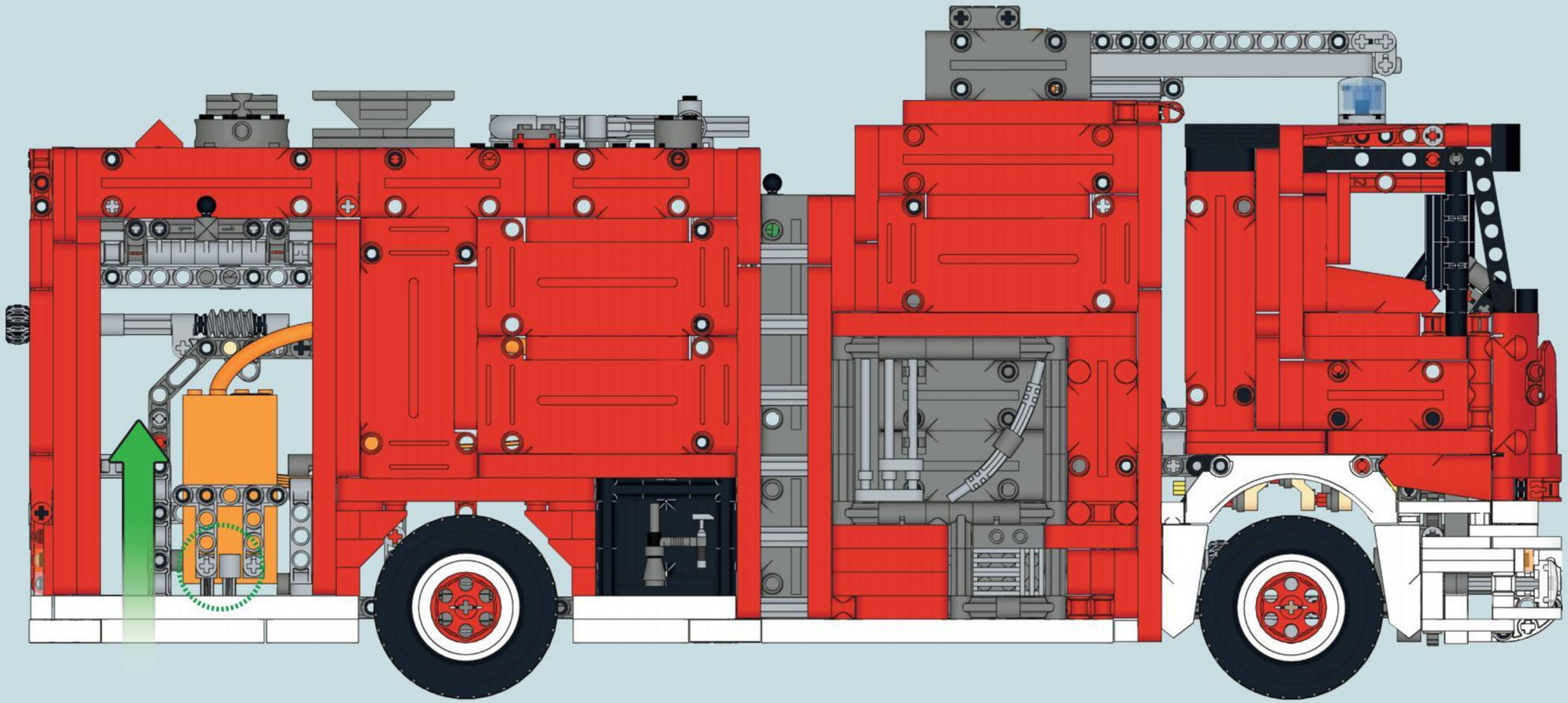

# 8

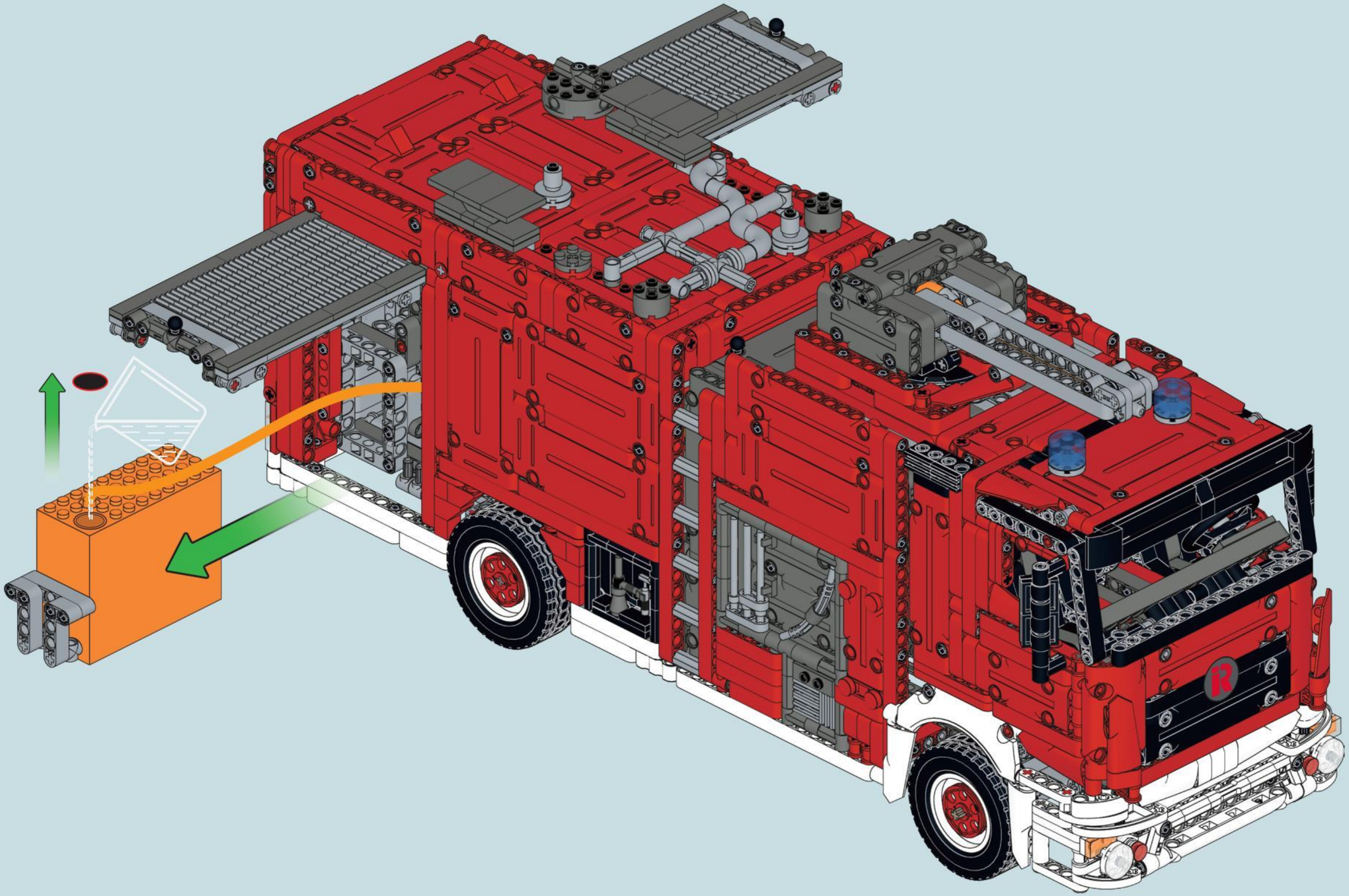

9

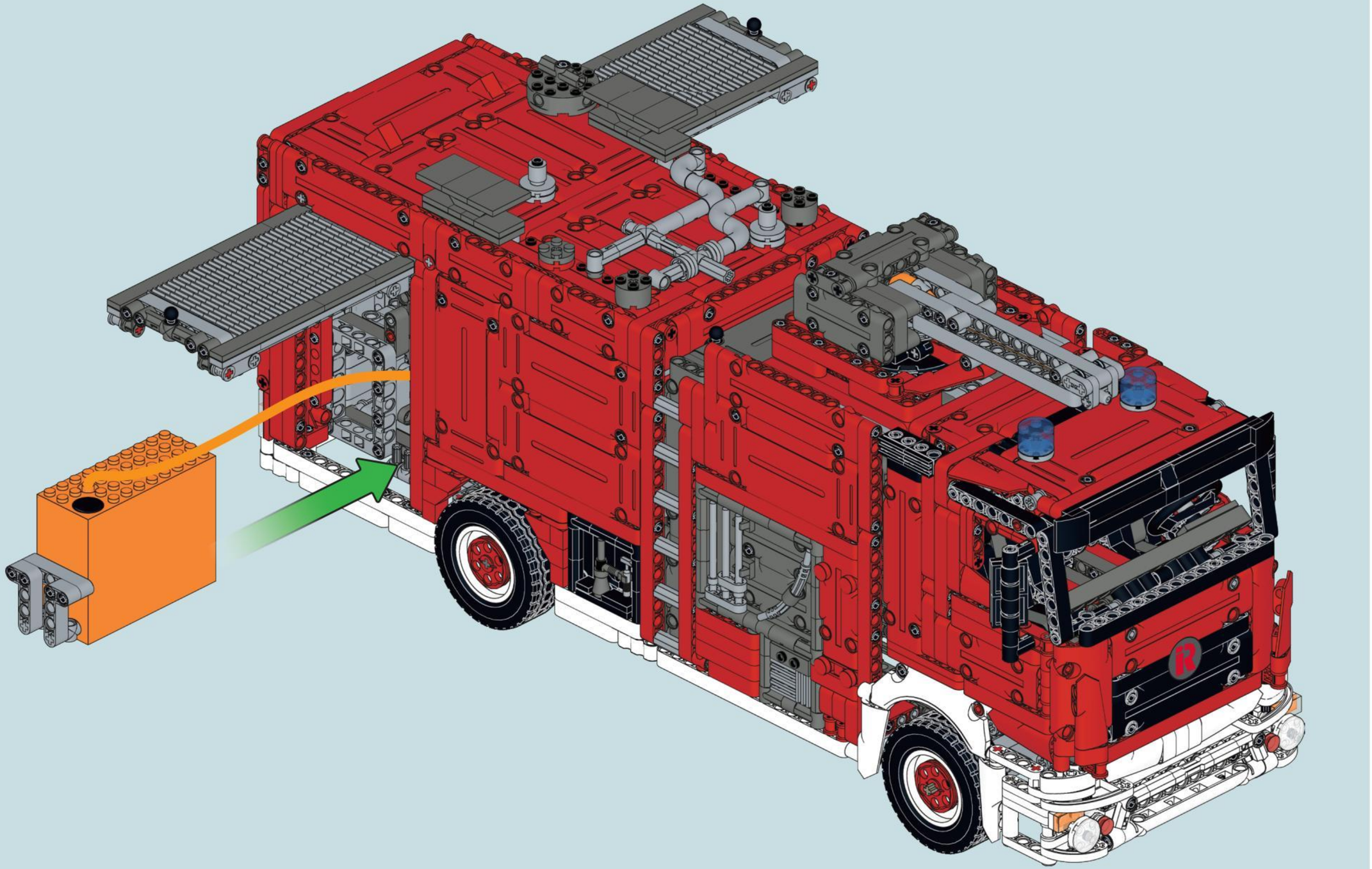

# 10

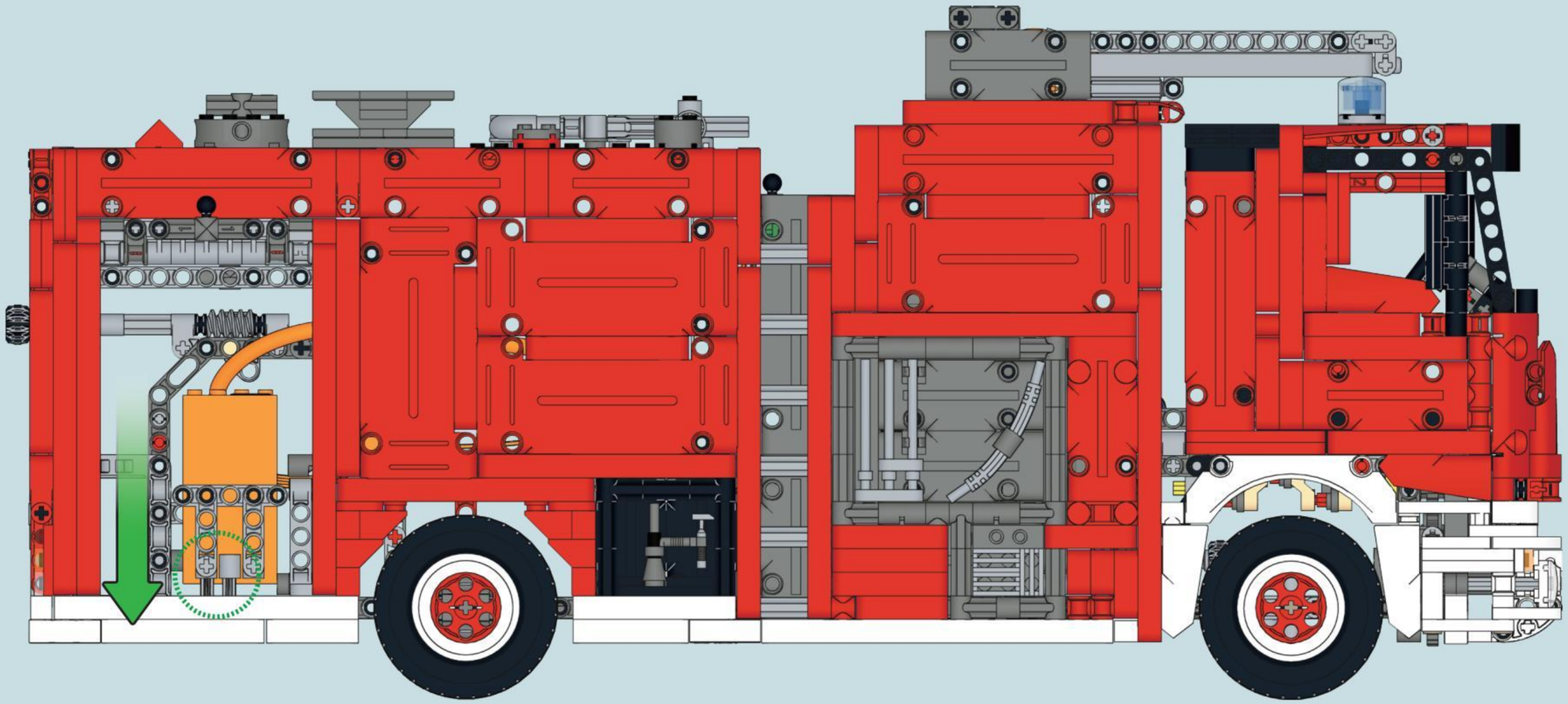

# 11

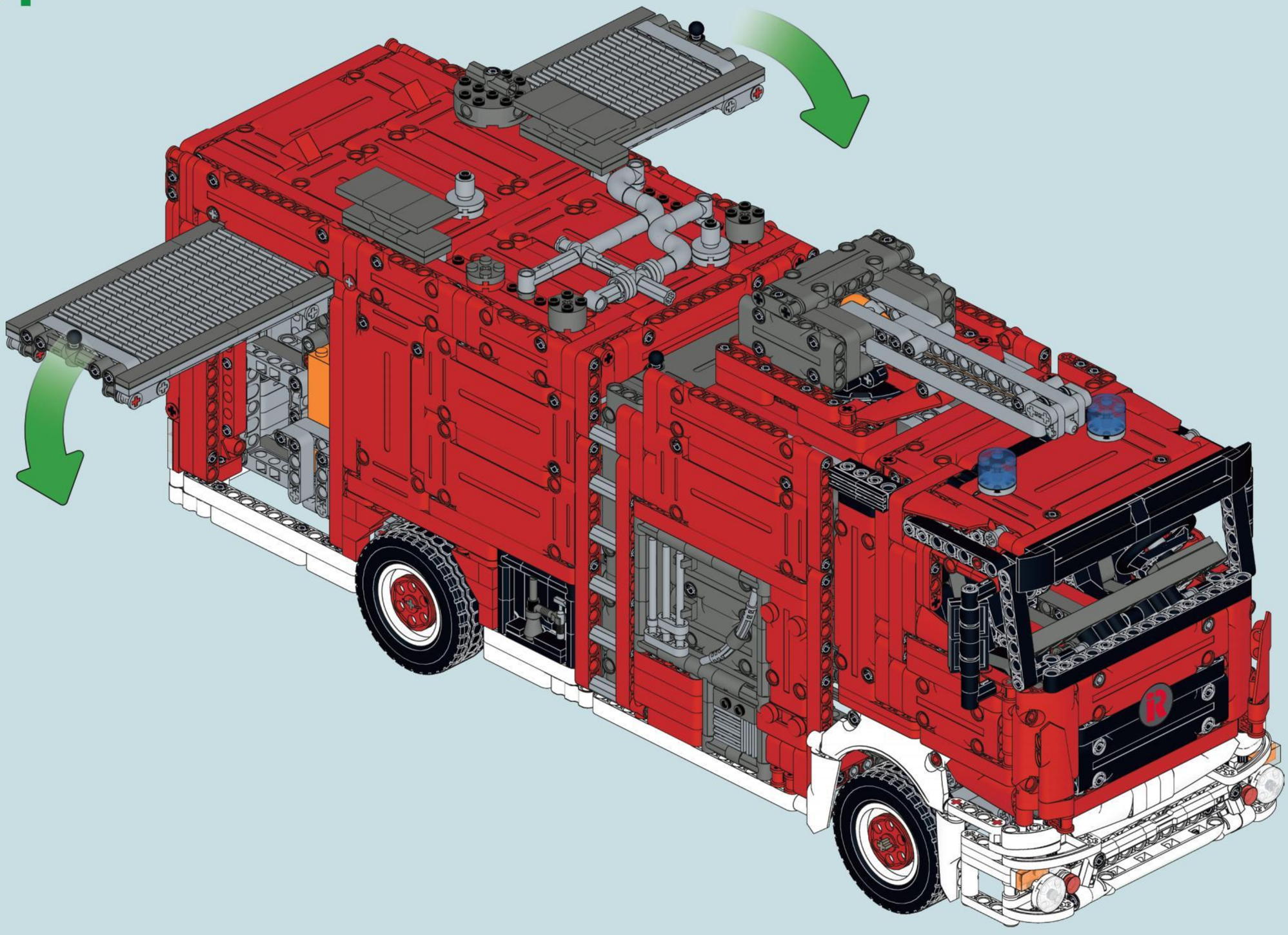

# 12

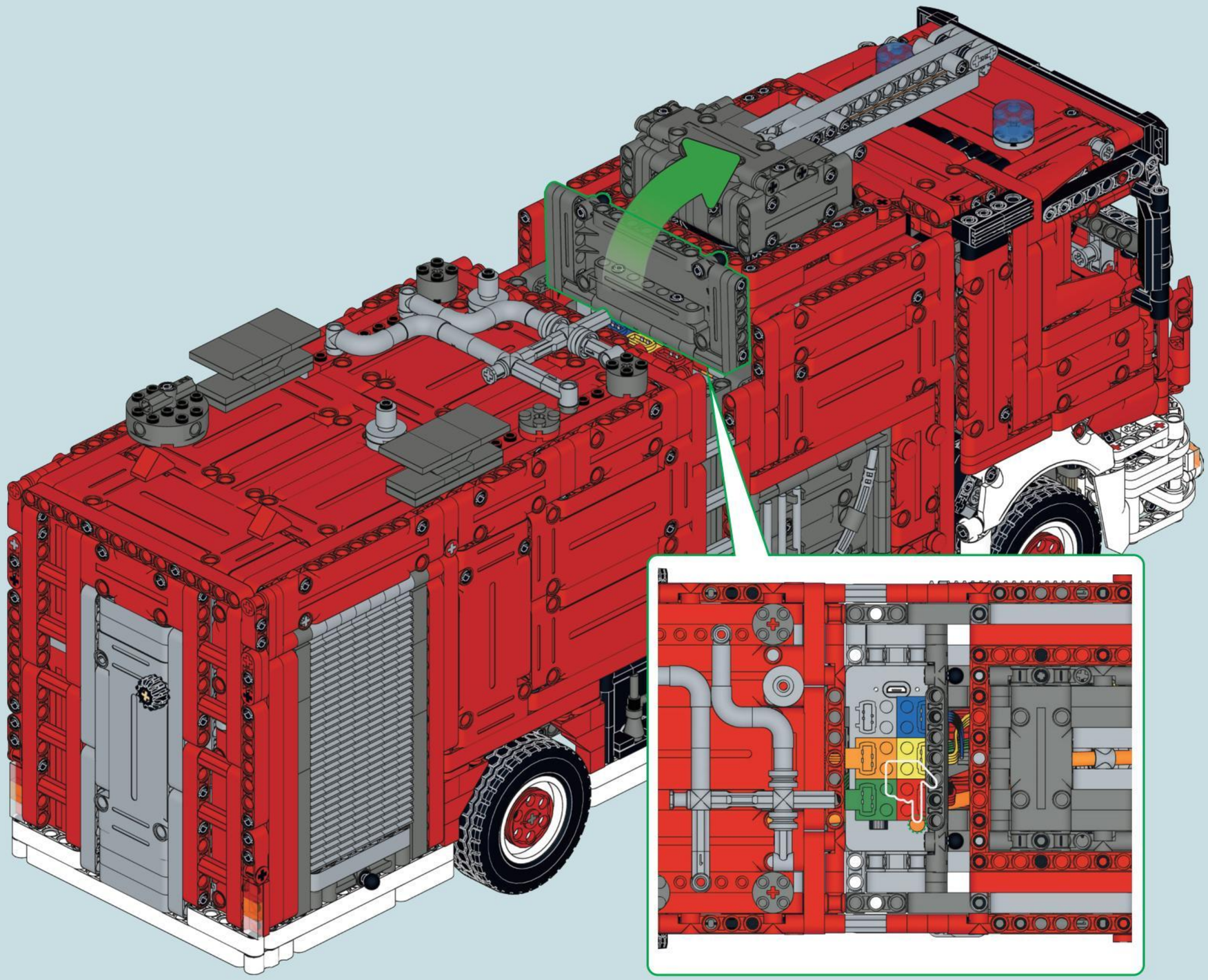

4
13
16
2
24
22
26
18
12
21
23
25
27
5
6
15
7
8
28
28
FIRE & RESCUE
FIRE-ENGINE
FIRE-ENGINE
FIRE-ENGINE
AUTO
TRUCK

1
15
FIRE-ENGINE
18
13
19
3
14
FIRE & RESCUE
17
11
19
FIRE-ENGINE
20
20

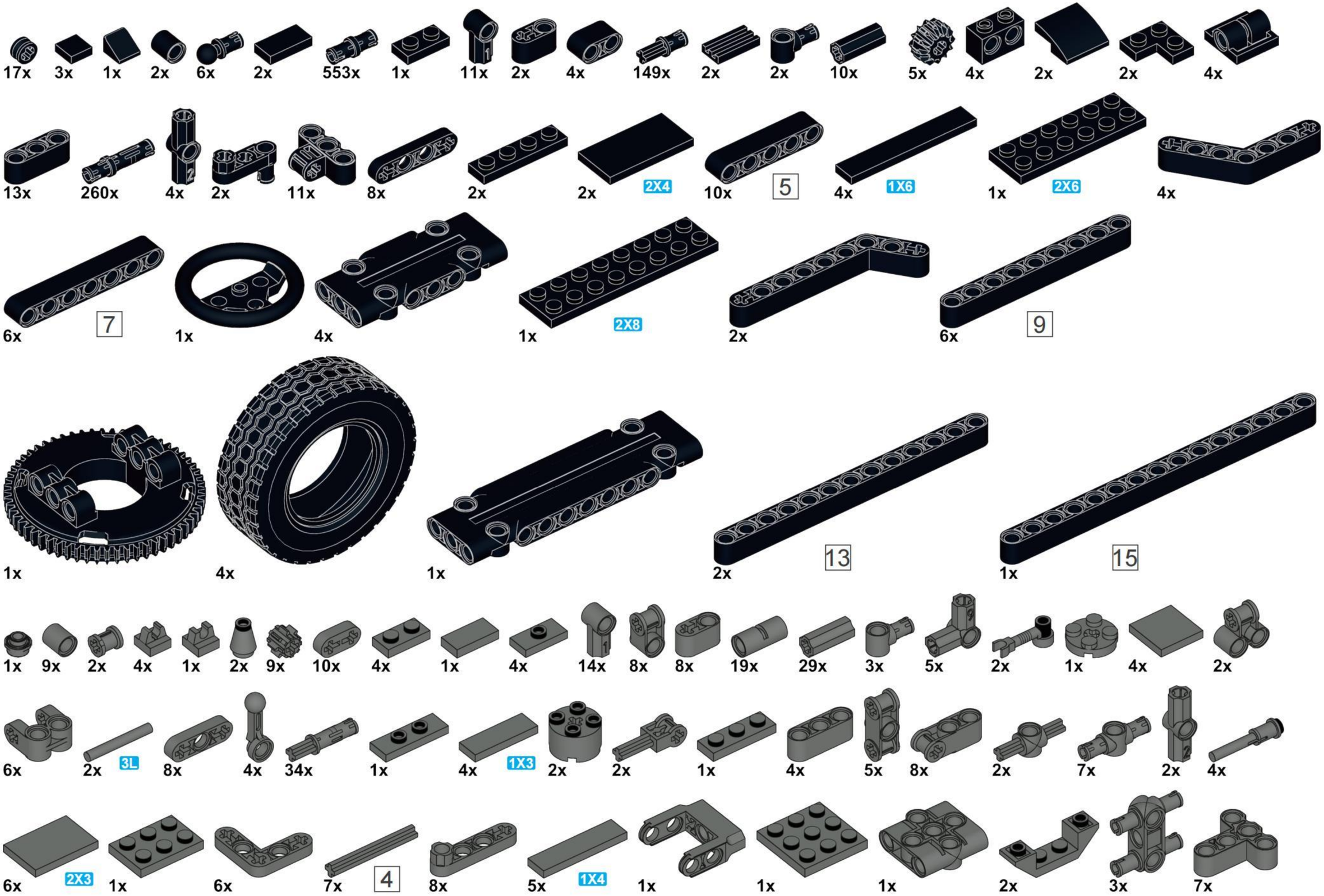
17x 3x 1x 2x 6x 2x 553x 1x 11x 2x 4x 149x 2x 2x 10x 5x 4x 2x 2x 4x
13x 260x 4x 2x 11x 8x 2x 2x 2X4 10x 5 4x 1X6 1x 2X6 4x
6x 7 1x 4x 1x 2X8 2x 6x 9
1x 4x 1x 2x 13 1x 15
1x 9x 2x 4x 1x 2x 9x 10x 4x 1x 4x 14x 8x 8x 19x 29x 3x 5x 2x 1x 4x 2x
6x 2x 3L 8x 4x 34x 1x 4x 1X3 2x 2x 1x 4x 5x 8x 2x 7x 2x 4x
6x 2X3 1x 6x 7x 4 8x 5x 1X4 1x 1x 1x 2x 3x 7x

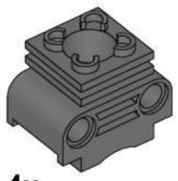
4x

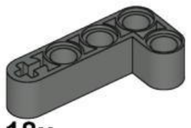
18x

5x

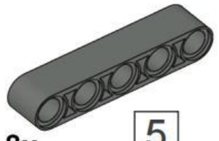
8x 5

3x

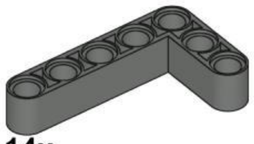
14x

2x

1x

4x

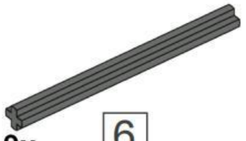
9x 6

2x 2X6

2x

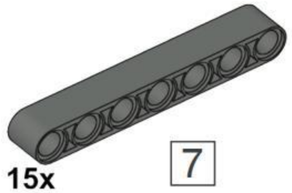
15x 7

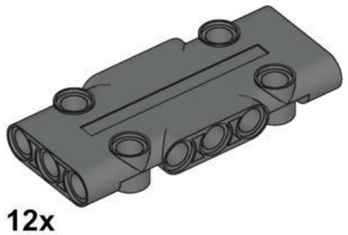
12x

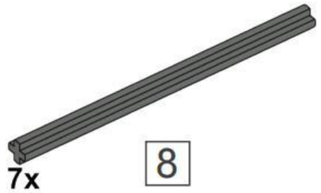
7x 8

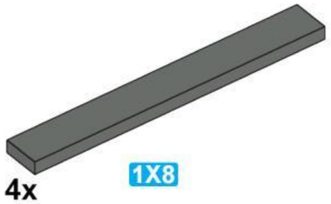
4x 1X8

1x 1X8

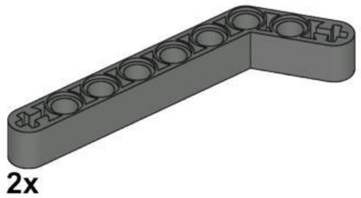
2x

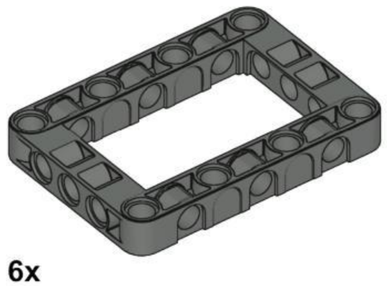
6x

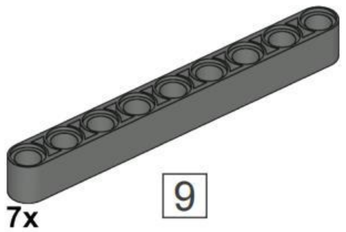
7x 9

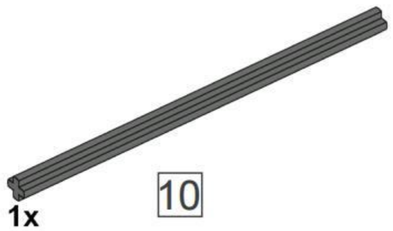
1x 10

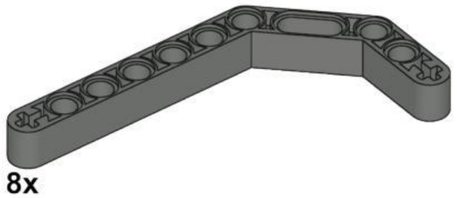
8x

1x

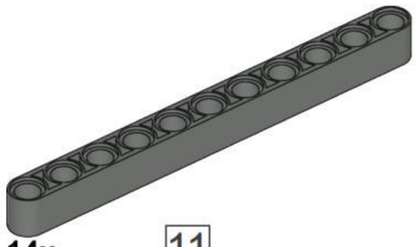
14x 11

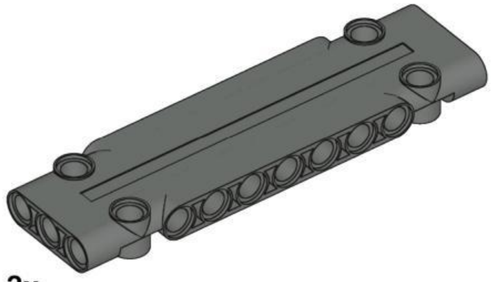
2x

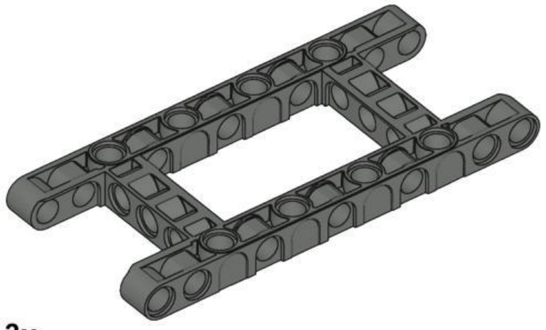
3x

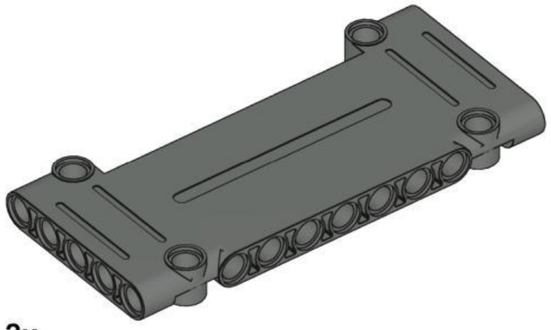
2x

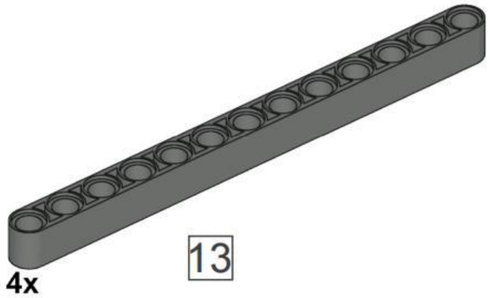
4x 13

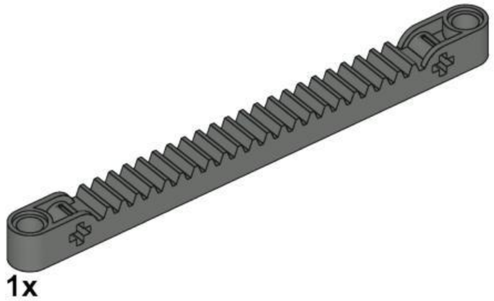
1x

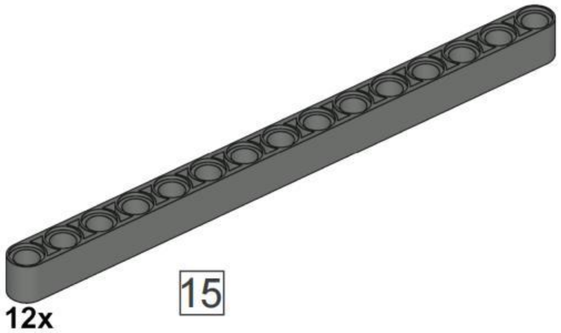
12x 15

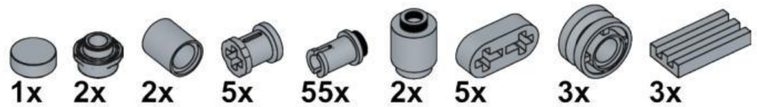
1x 2x 2x 5x 55x 2x 5x 3x 3x

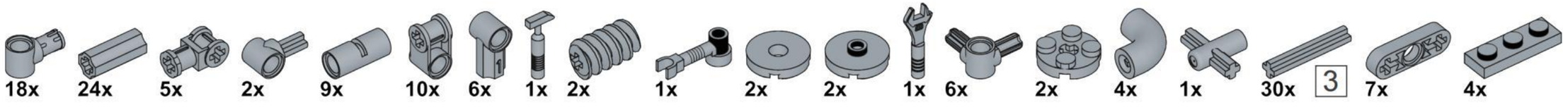
18x 24x 5x 2x 9x 10x 6x 1x 2x 1x 2x 2x 1x 6x 2x 4x 1x 30x 3 7x 4x

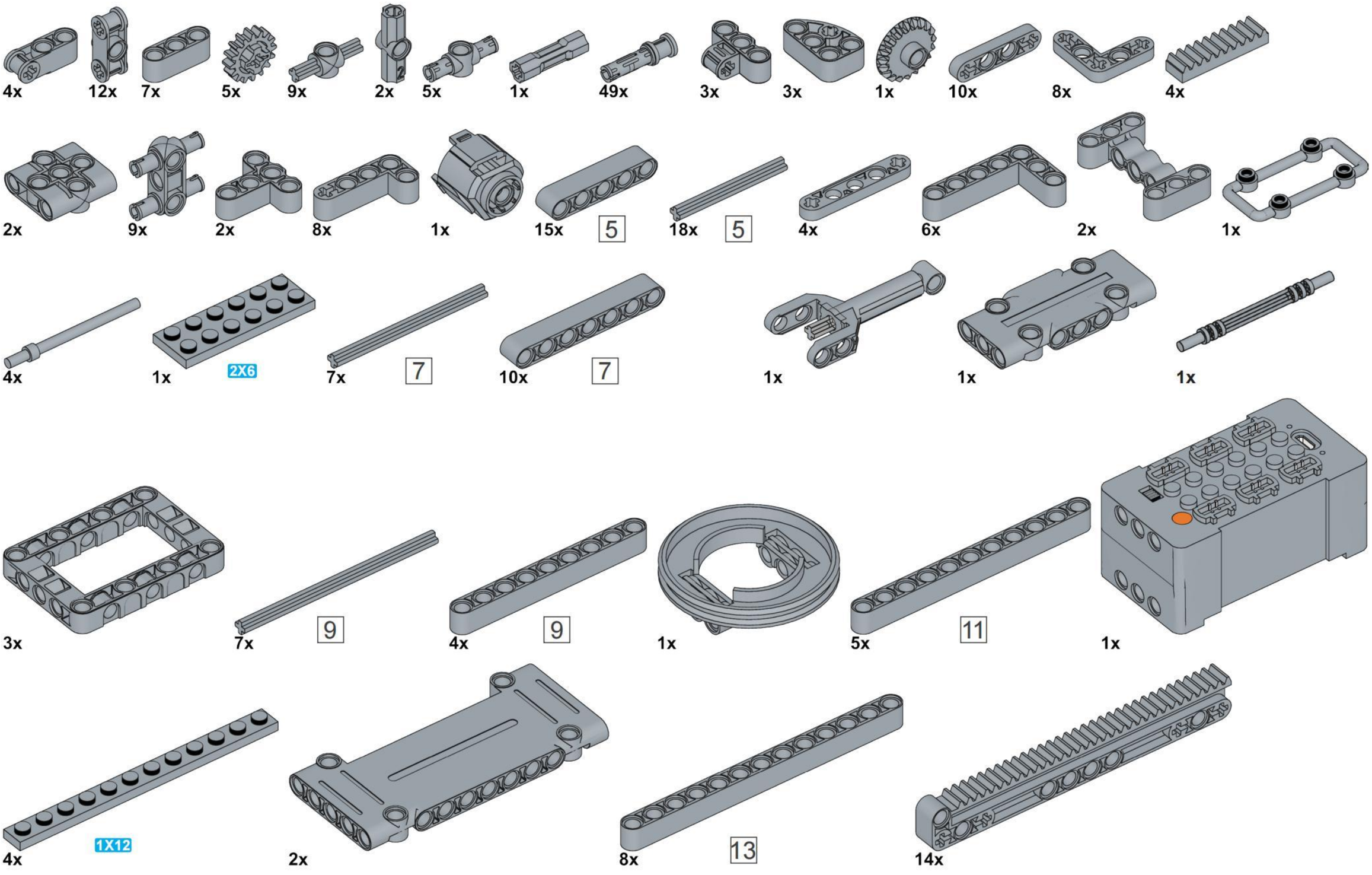
4x
12x
7x
5x
9x
2x
5x
1x
49x
3x
3x
1x
10x
8x
4x
2x
9x
2x
8x
1x
15x
5
18x
5
4x
6x
2x
1x
4x
1x
2X6
7x
7
10x
7
1x
1x
1x
3x
7x
9
4x
9
1x
5x
11
1x
4x
1X12
2x
8x
13
14x

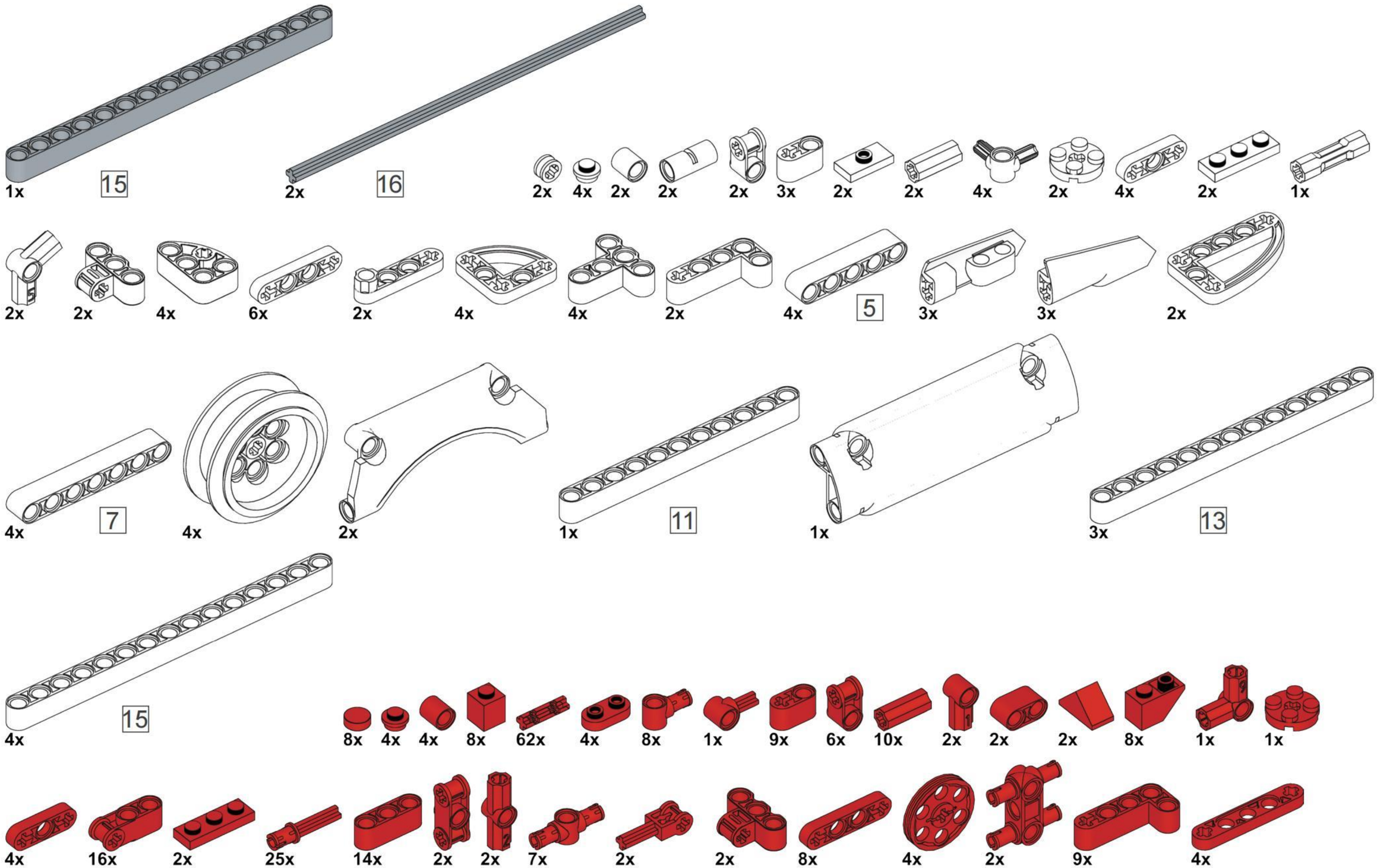
1x 15
2x 16
2x 4x 2x 2x 2x 3x 2x 2x 4x 2x 4x 2x 1x
2x 2x 4x 6x 2x 4x 4x 2x 4x 5 3x 3x 2x
4x 7 4x 2x 1x 11 1x 3x 13
4x 15
8x 4x 4x 8x 62x 4x 8x 1x 9x 6x 10x 2x 2x 2x 8x 1x 1x
4x 16x 2x 25x 14x 2x 2x 7x 2x 2x 8x 4x 2x 9x 4x

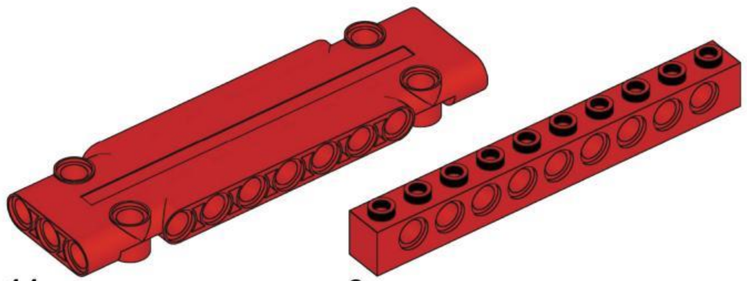
14x


2x

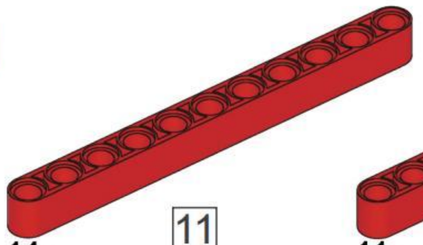
14x

11

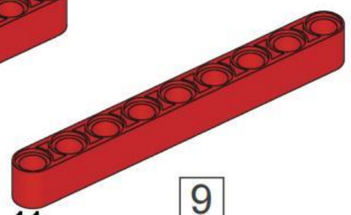
11x

9

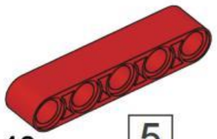
18x

5

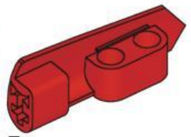
5x

1x

5x

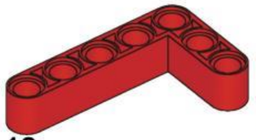
12x

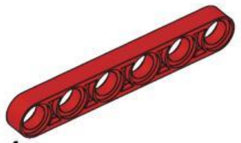
4x

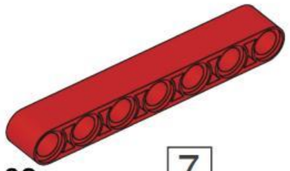
32x

7

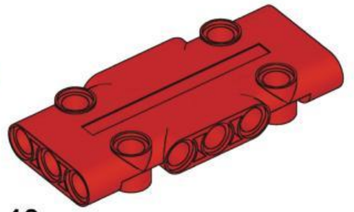
13x

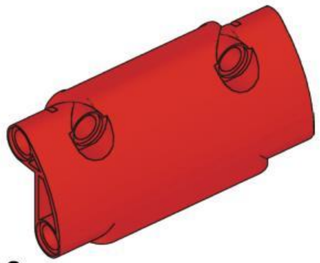
2x

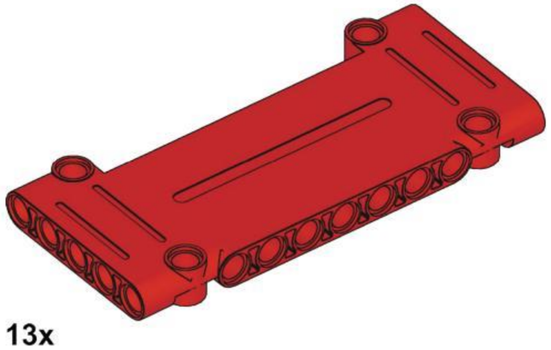
13x

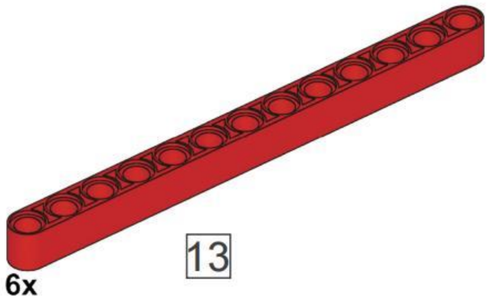
6x

13

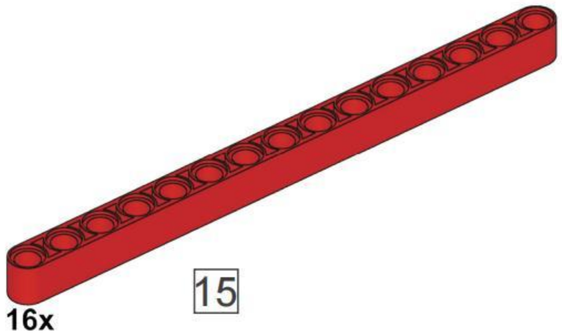
16x

15

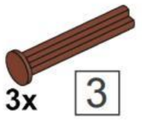
3x

3

2x

2x

2x

2x

2x

2x

2x

2x

2x

3

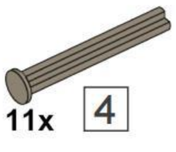
11x

4

8x

3x

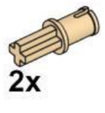
2x

7x

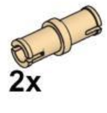
2x

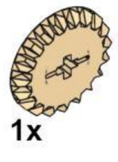
1x

1x

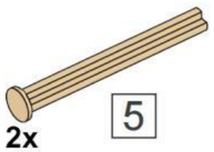
2x

5

1x

4x

2x

2x

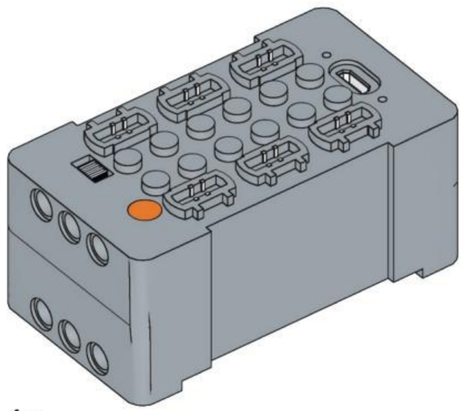

1x

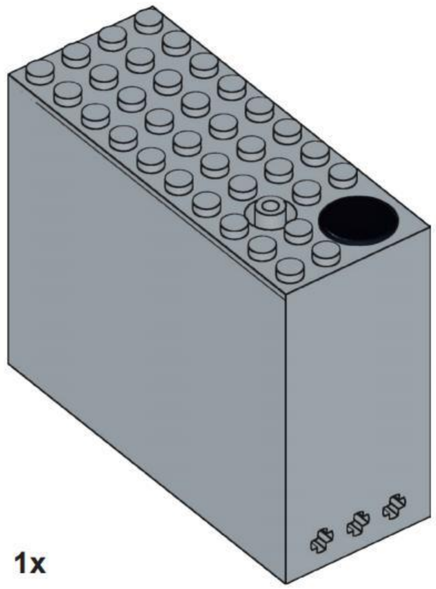

1x

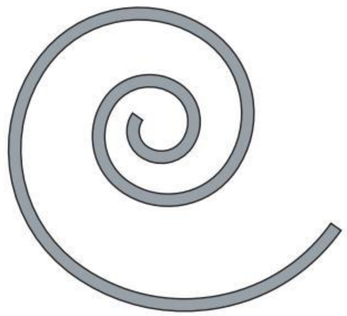


1x

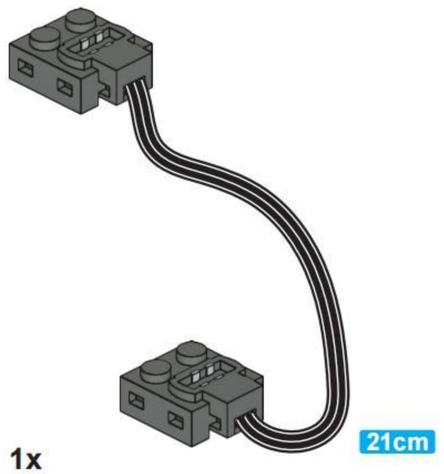


1x

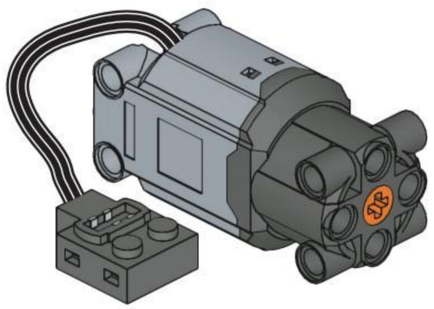

2x

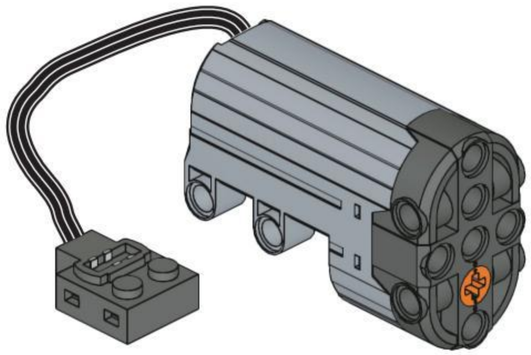

1x

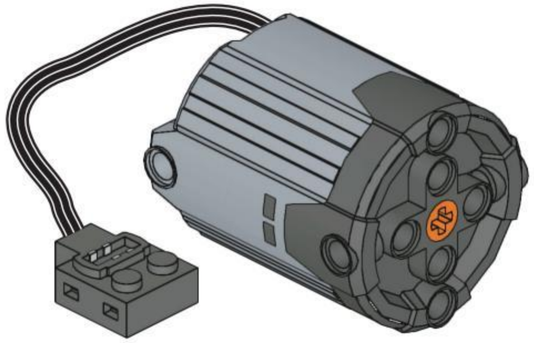

1x

Reobrix

NO.22008

# MECHANICAL Fire Truck