Reobrix

NO.66049

Revenge Sailing ship

REVENGE
CLASS BATTLESHIP

A

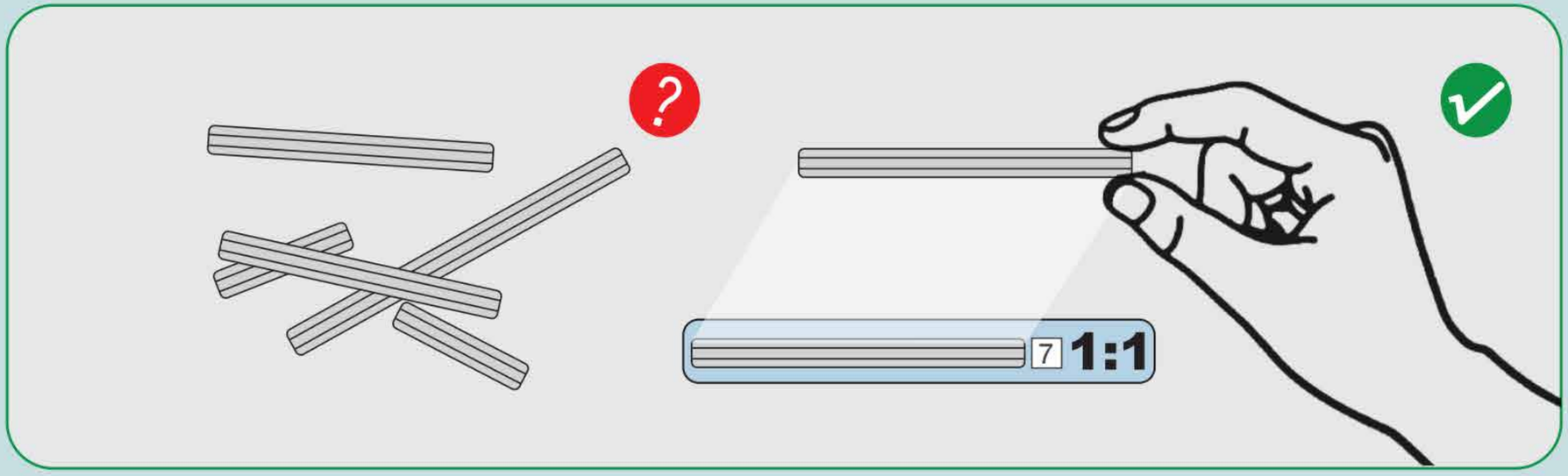
?
7
1:1

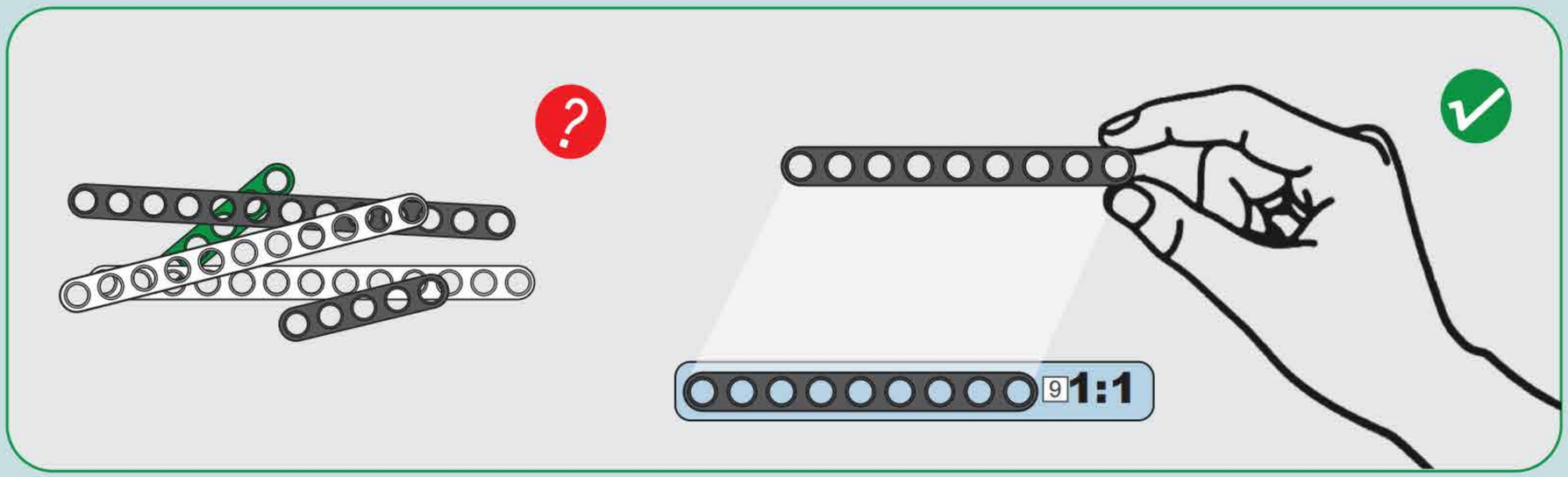
?
9
1:1

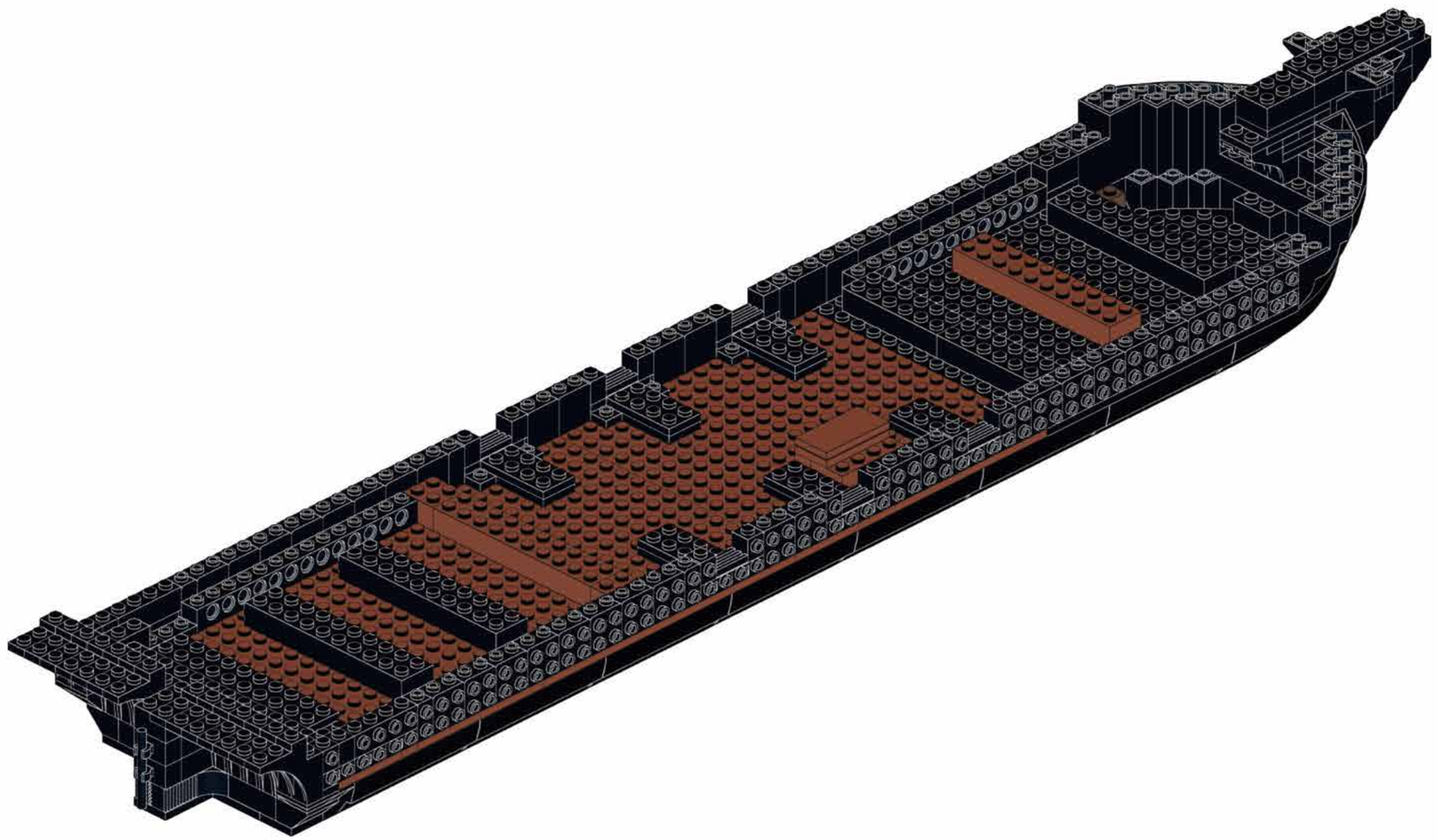

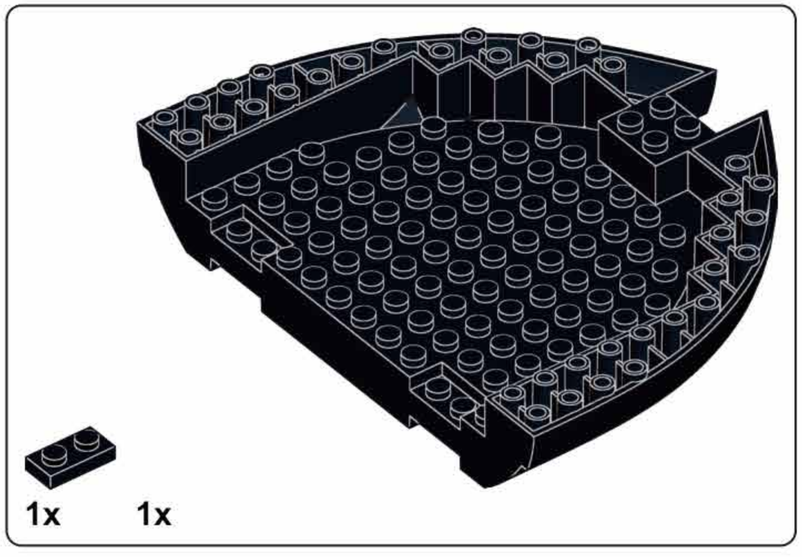

A1

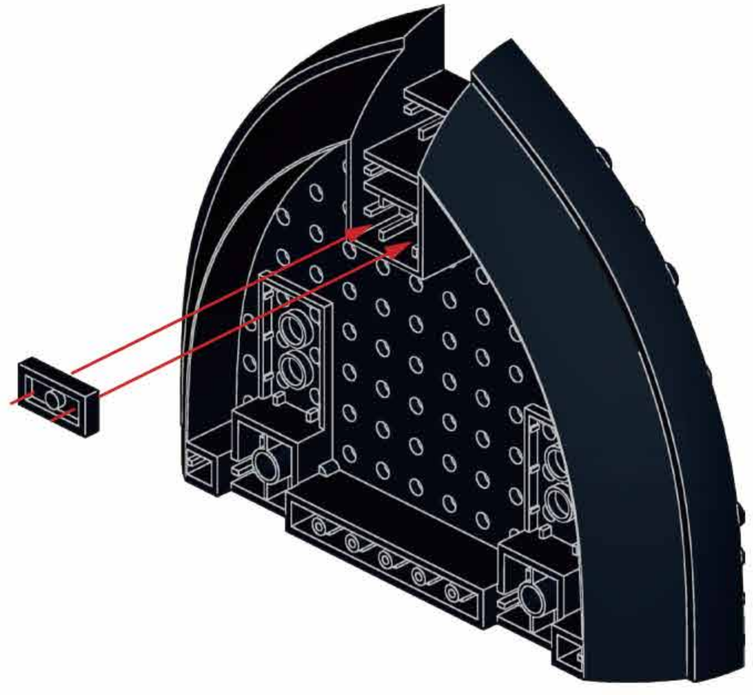

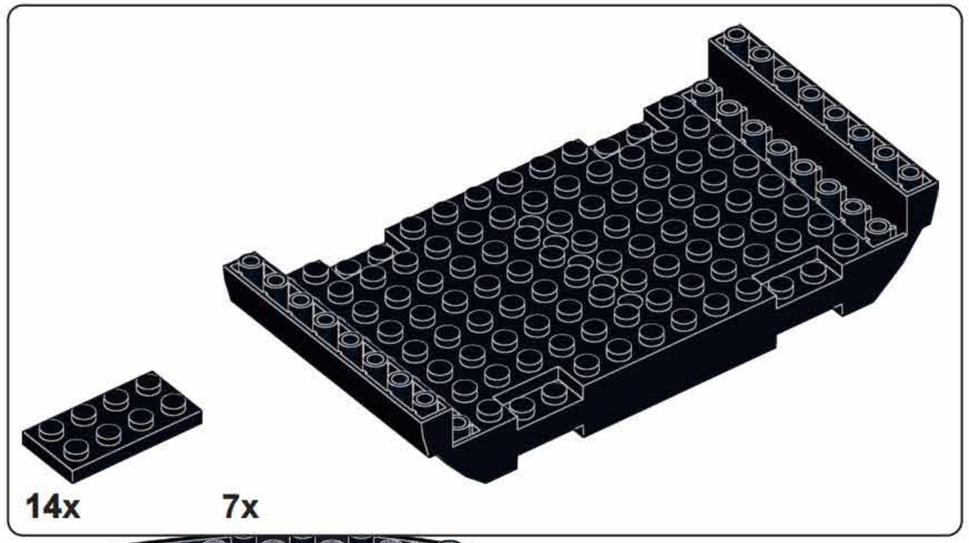

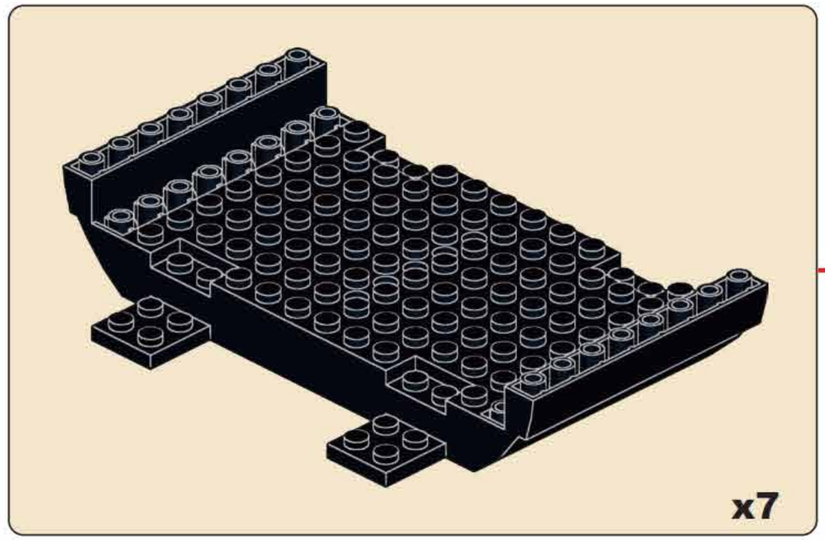

A2

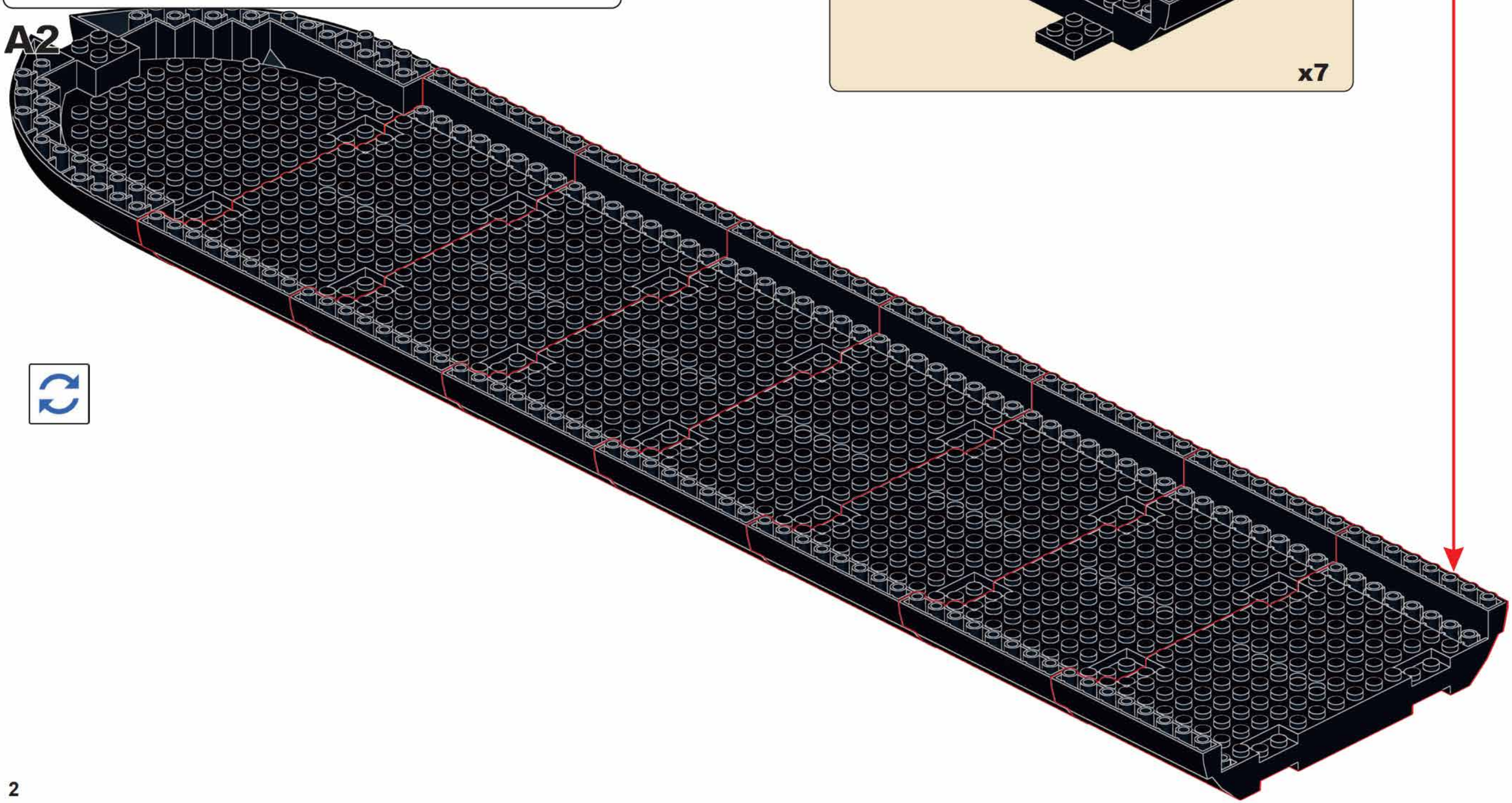

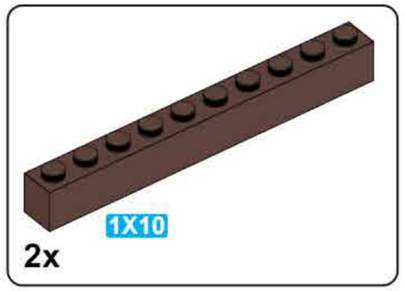

A3

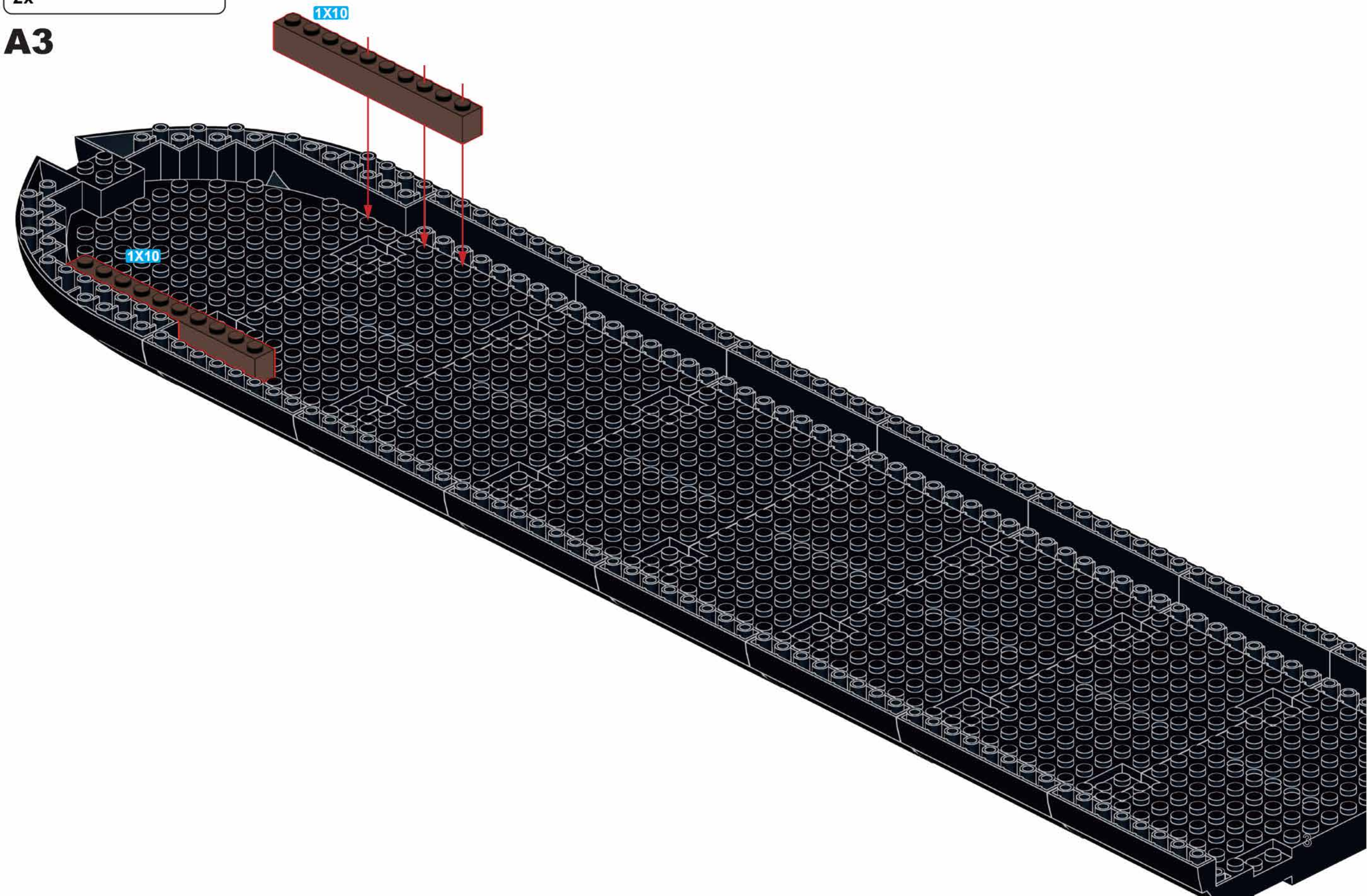

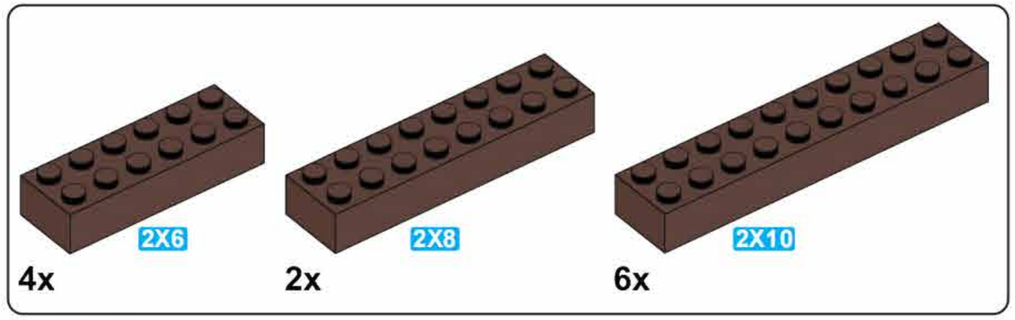
2X6
2X8
2X10
4x
2x
6x

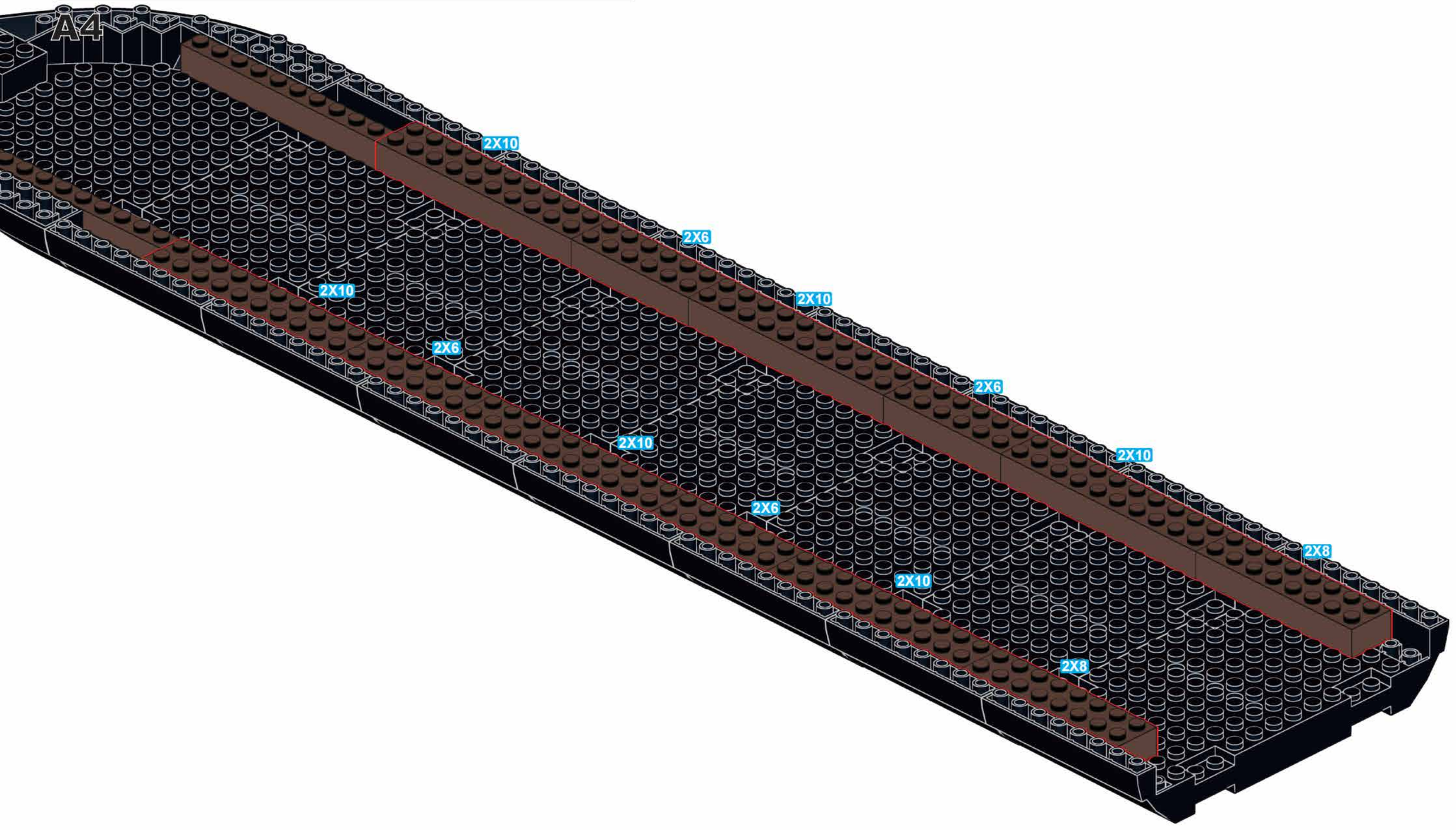
A4
2X10
2X6
2X10
2X6
2X10
2X6
2X10
2X10
2X6
2X8
2X8

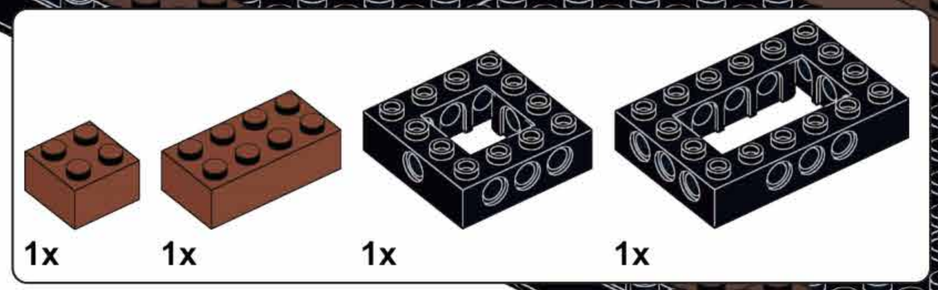

A5

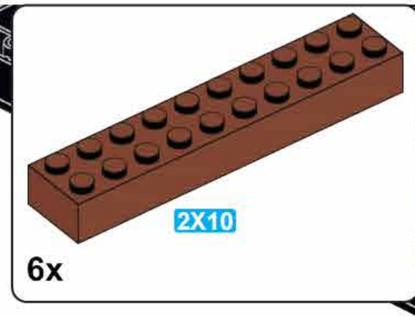

A6

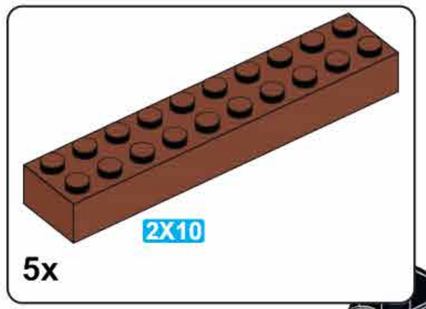

A7

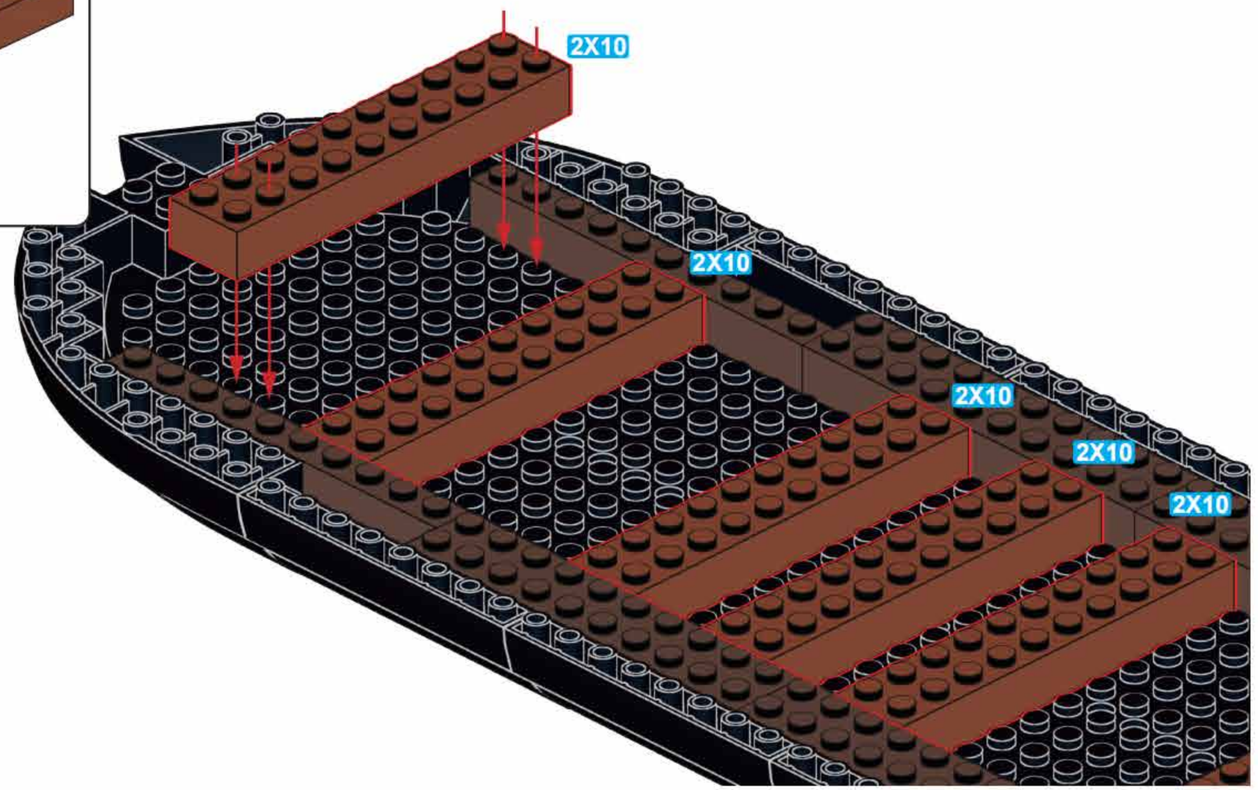

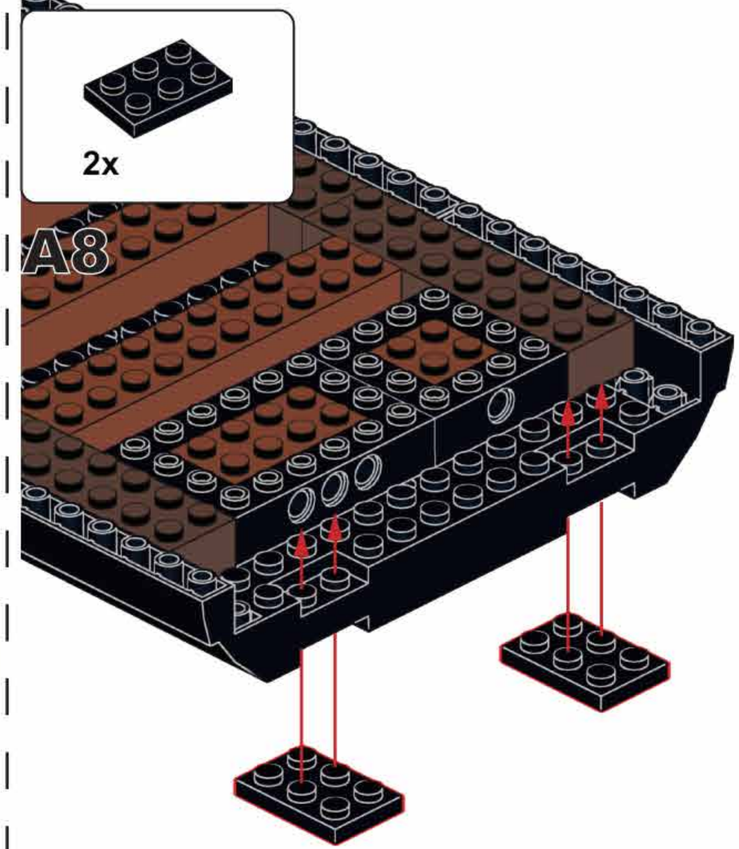

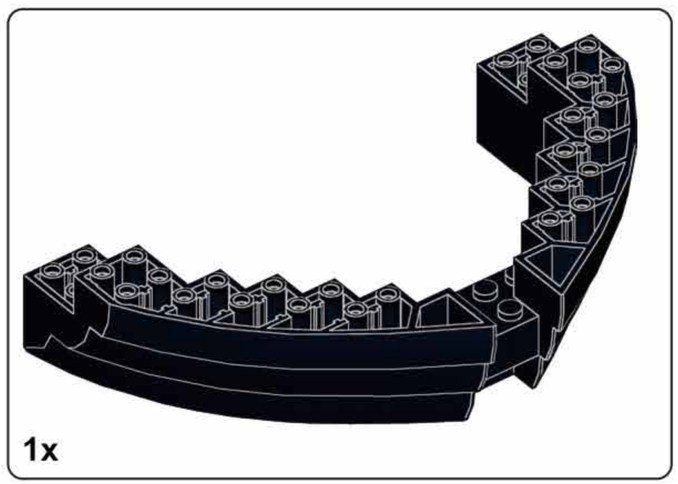

A9

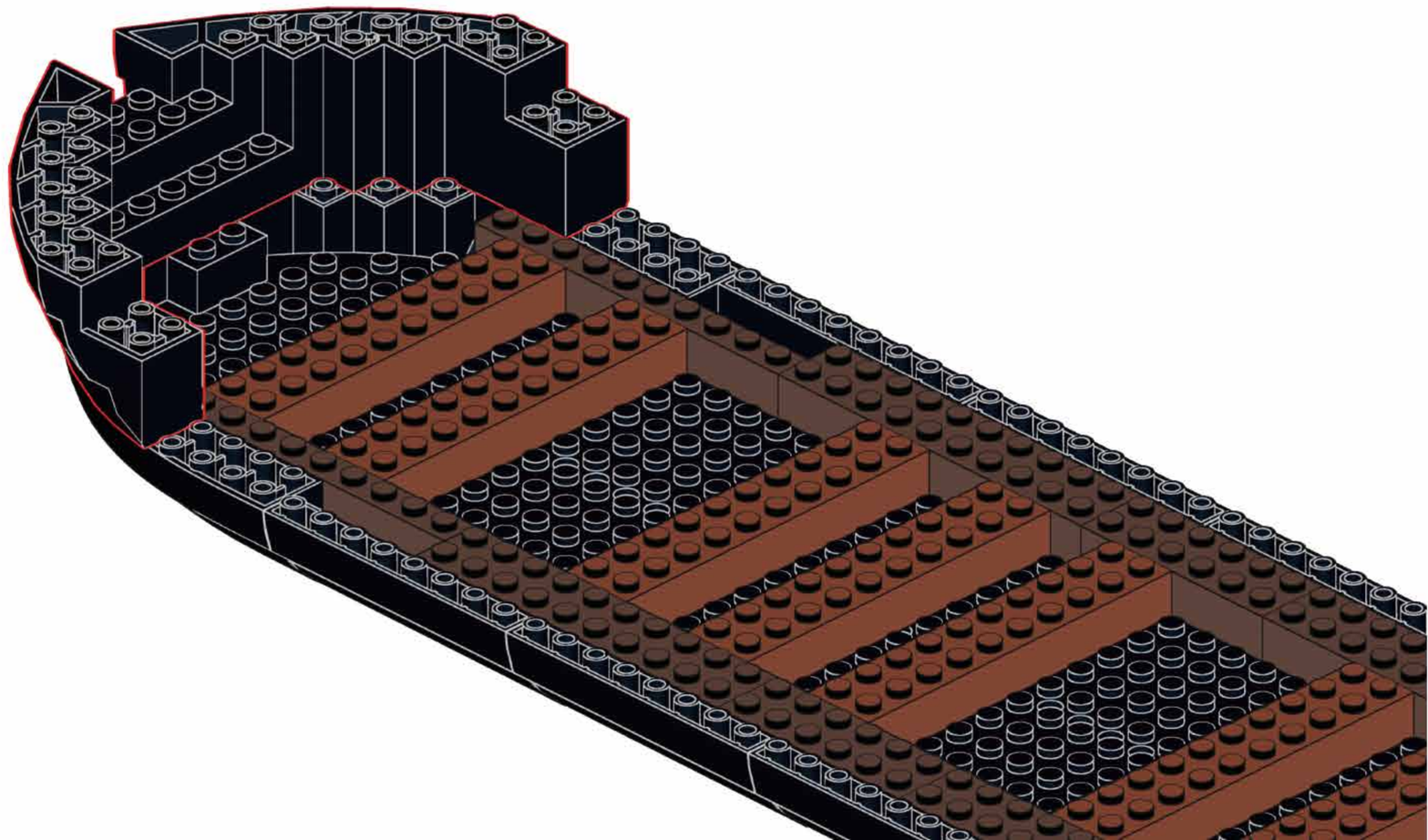

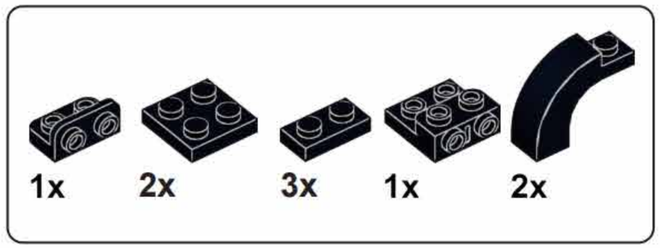

A10

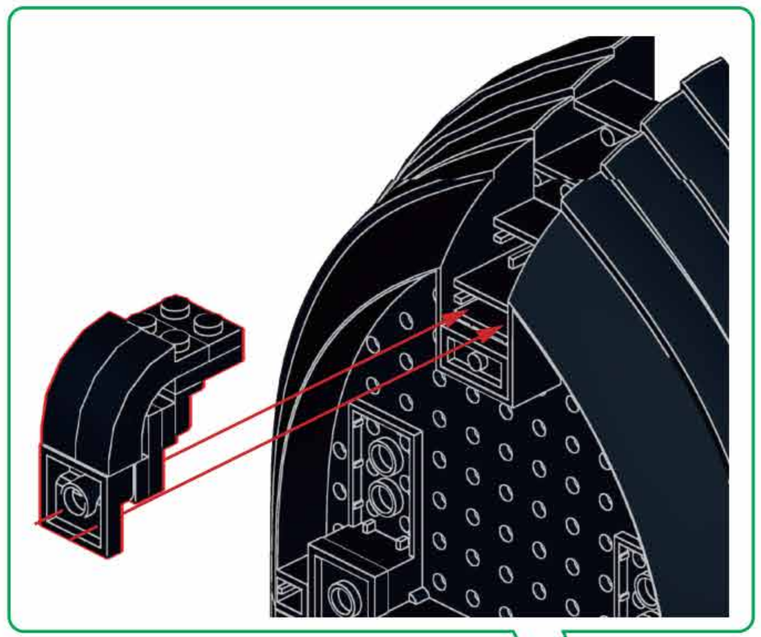

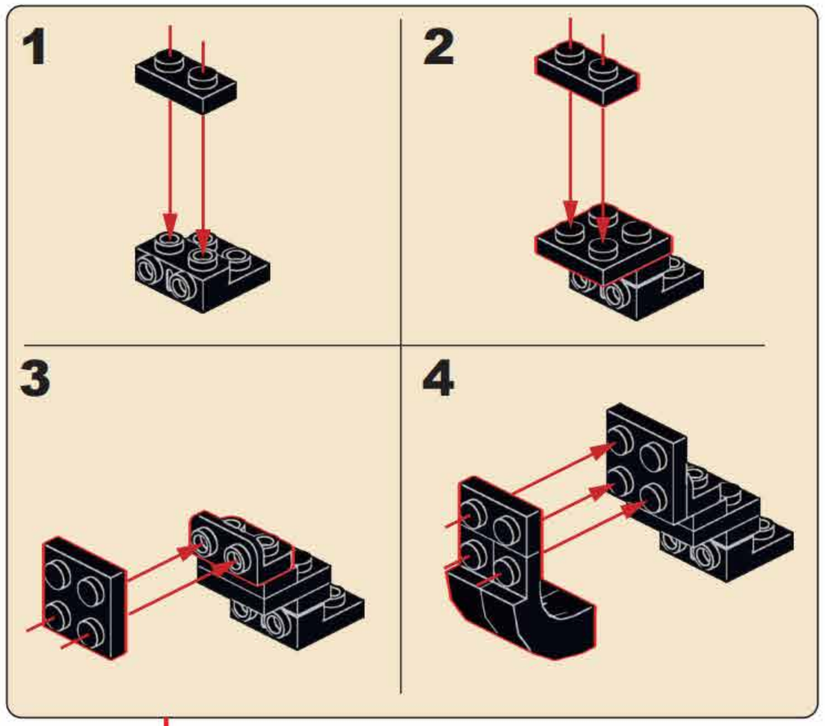

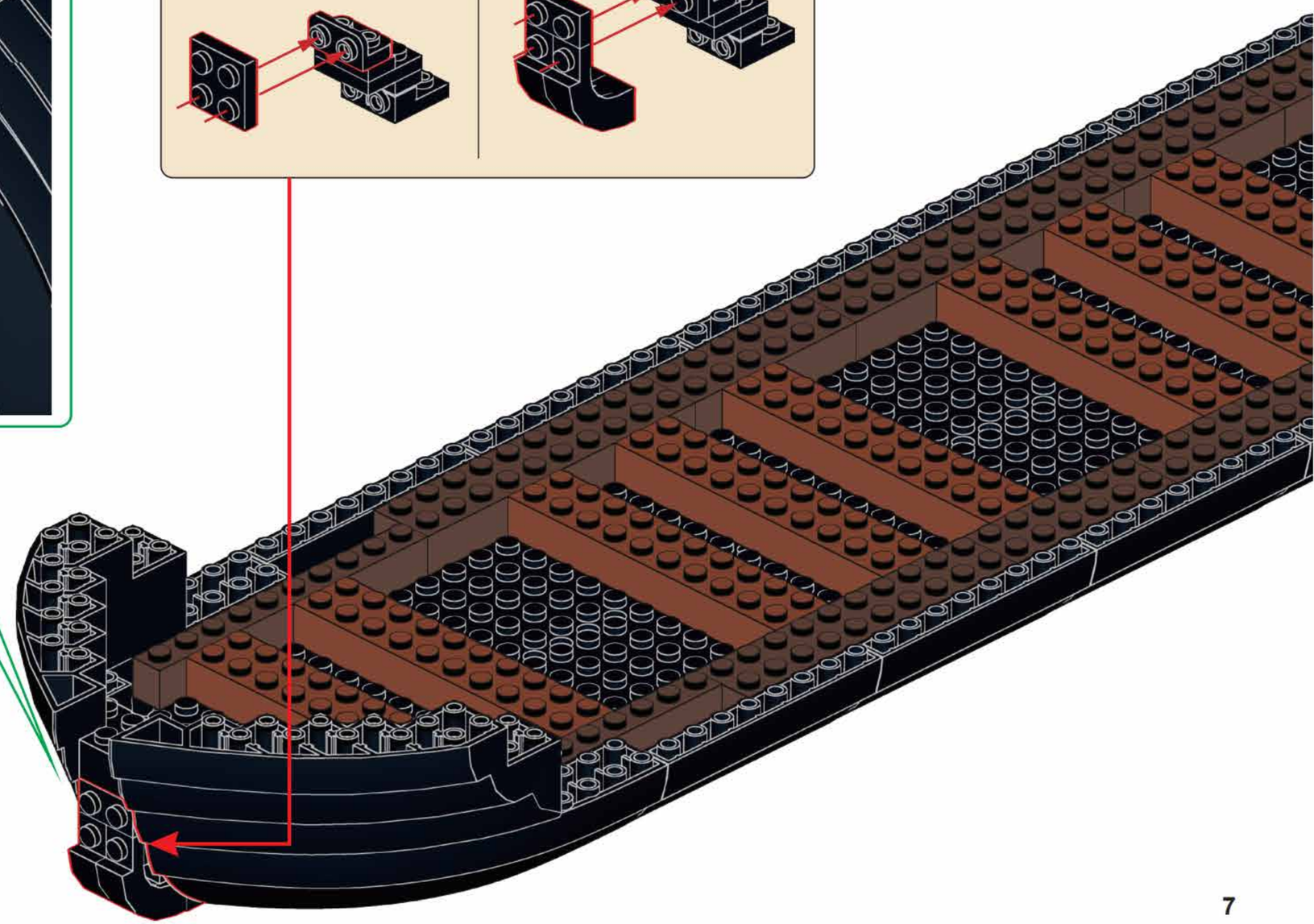

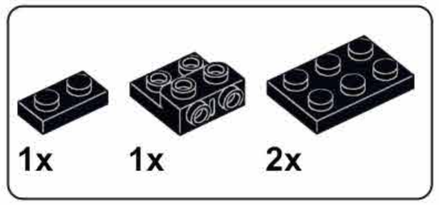

A11

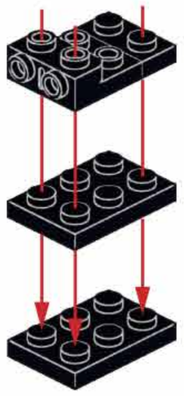

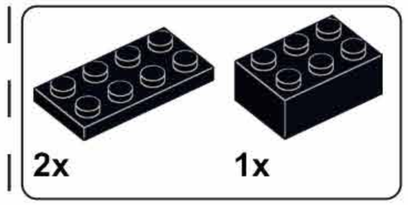

A12

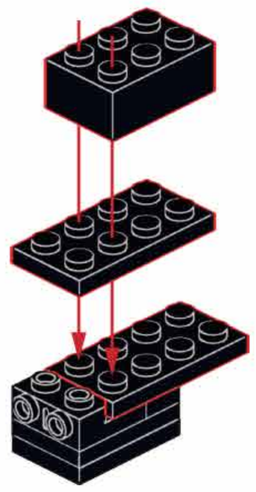

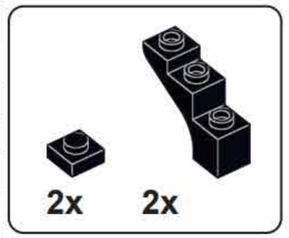

A13

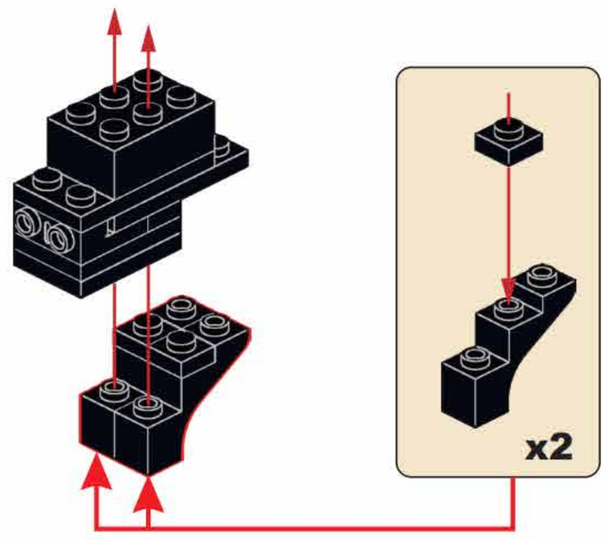

A14

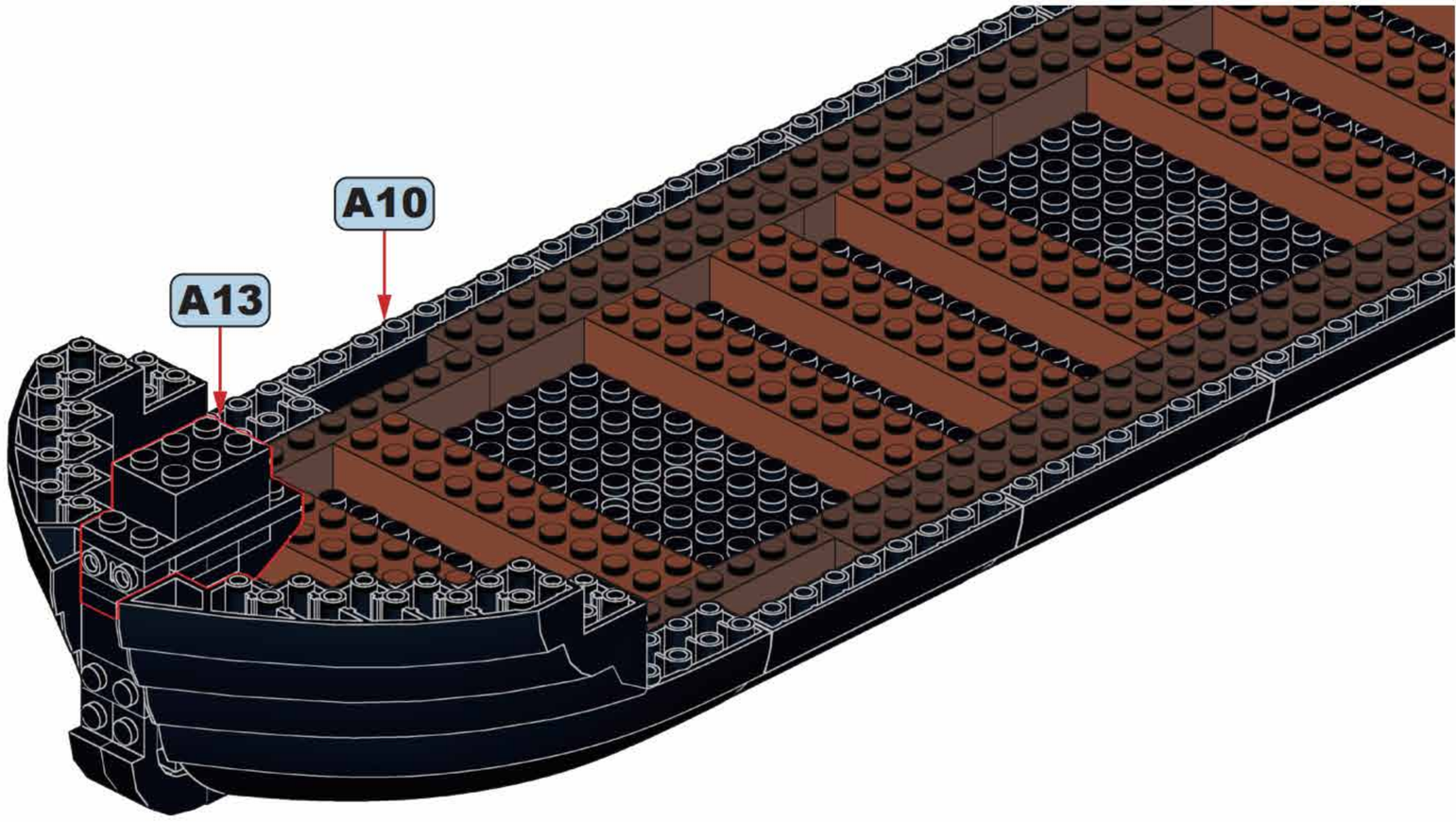

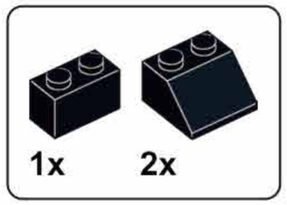

A15

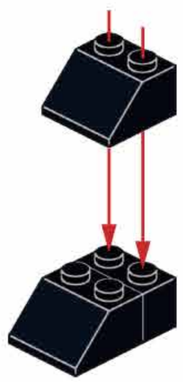

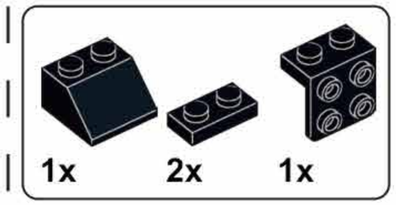

A16

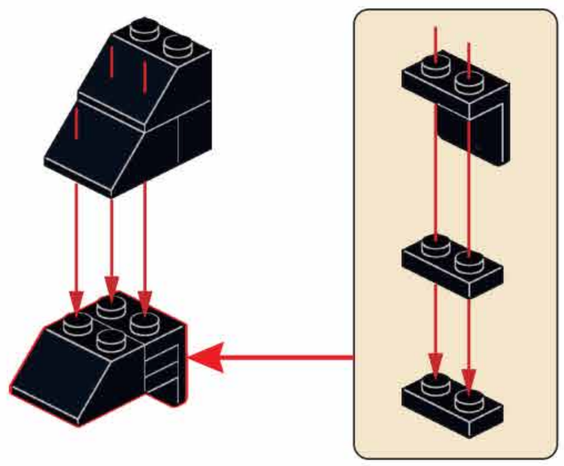

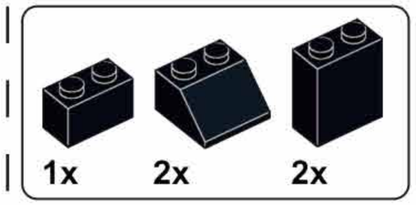

A17

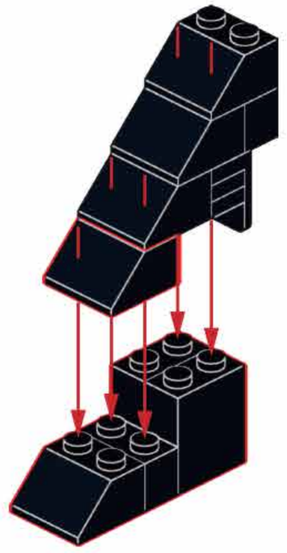

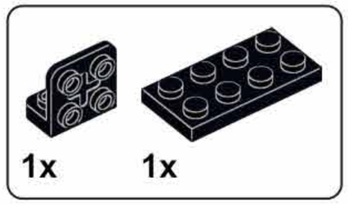

A18

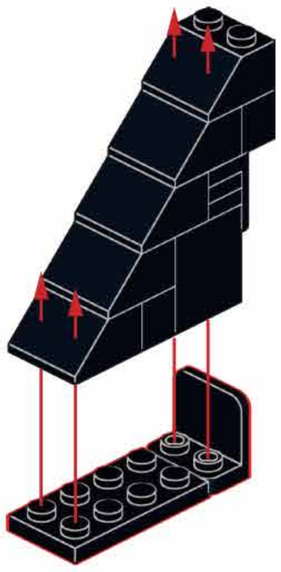

A19

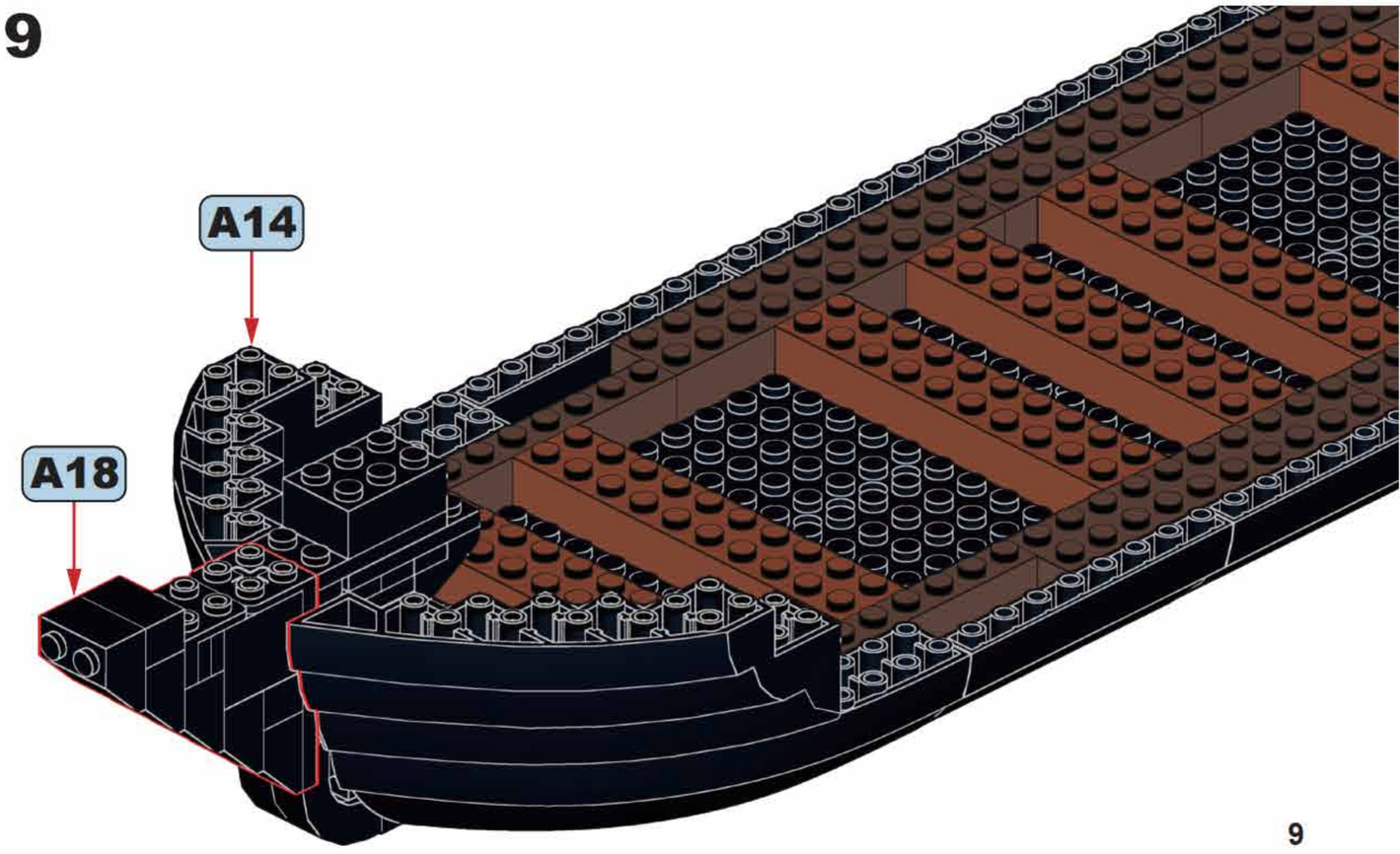

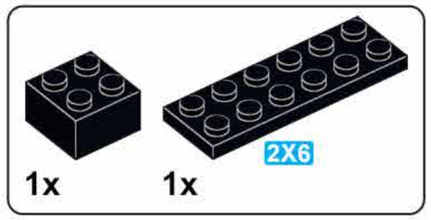

A20

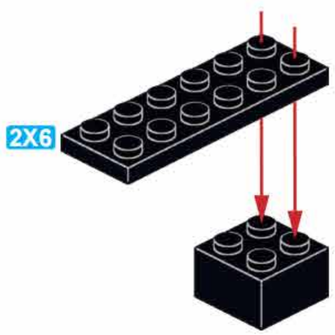

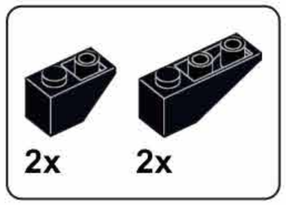

A21

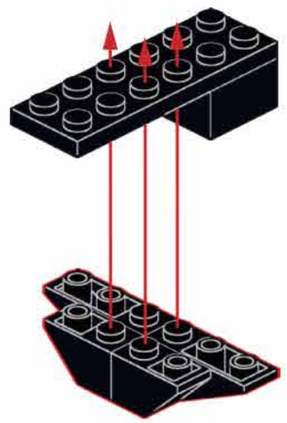

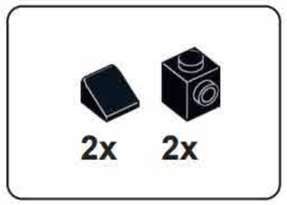

A22

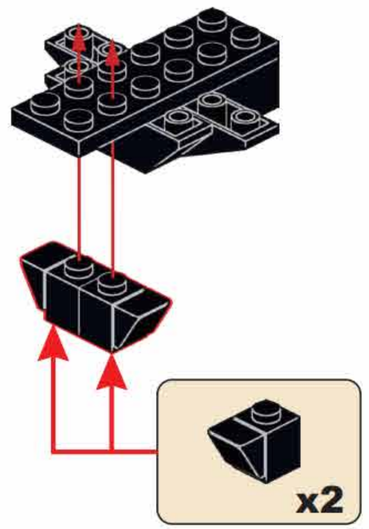

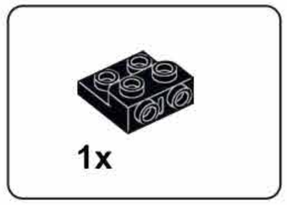

A23

A24

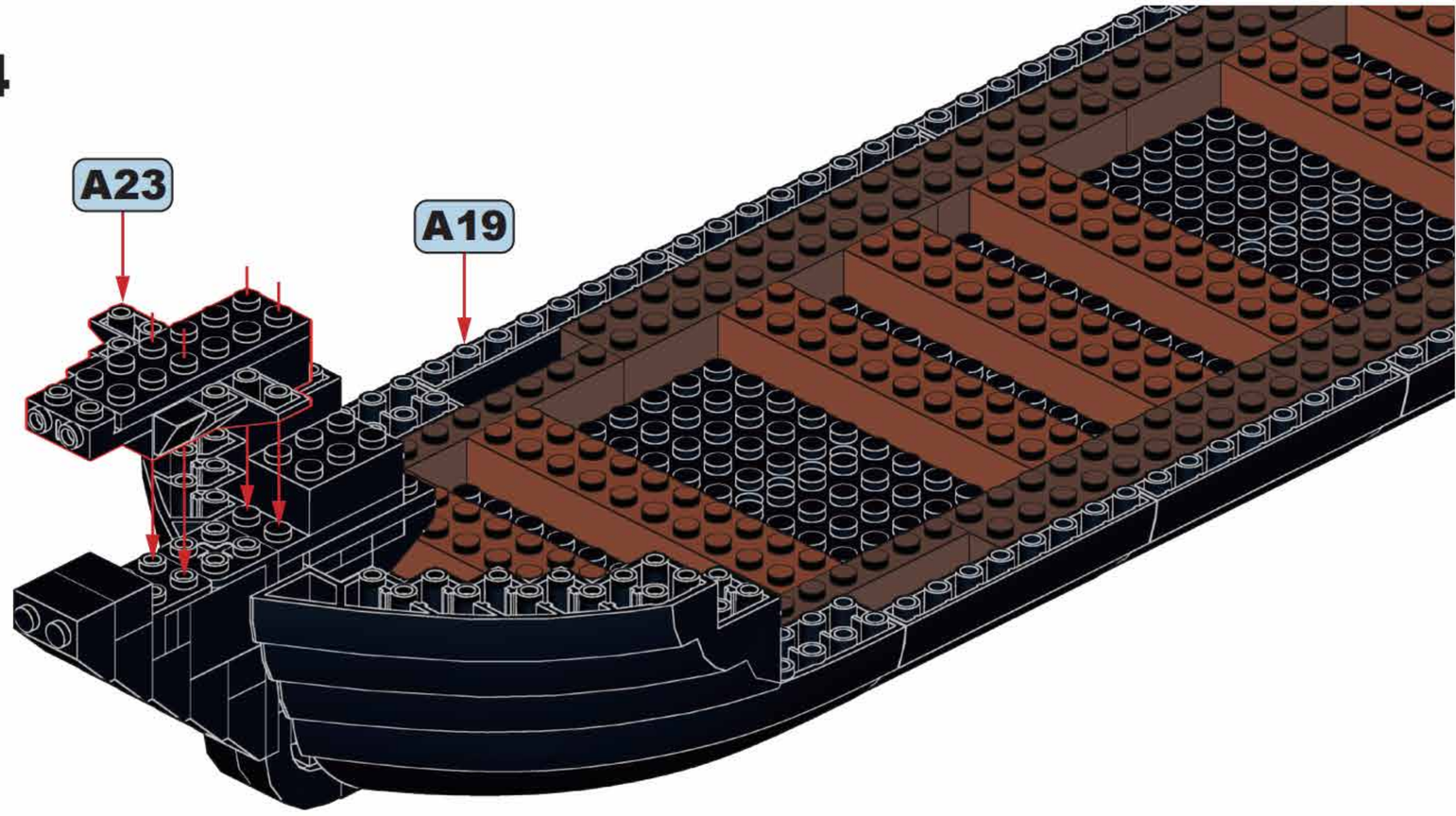

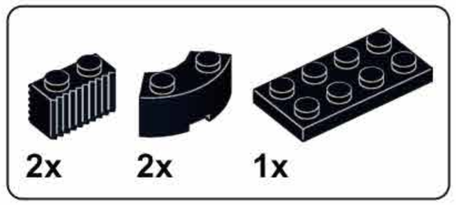

A25

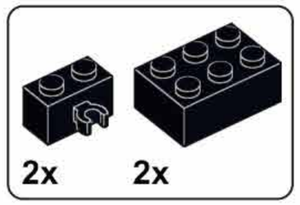

A26

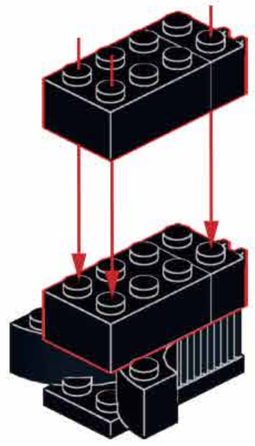

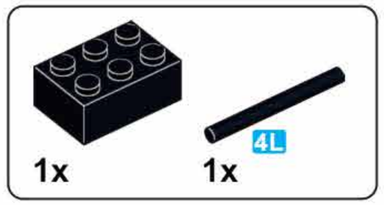

A27

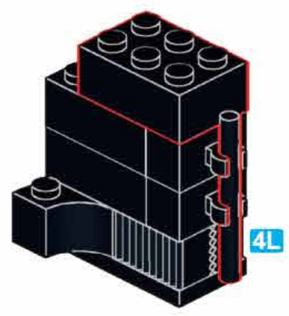

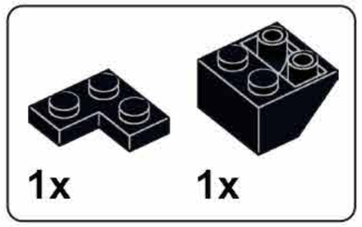

A28

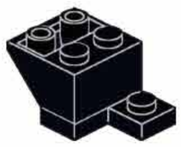

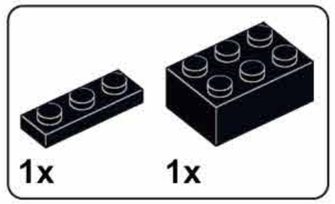

A29

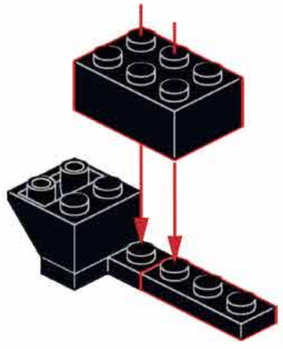

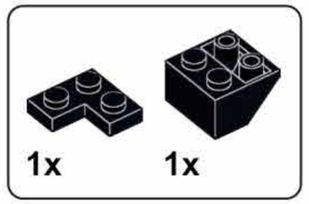

A30

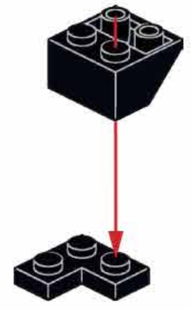

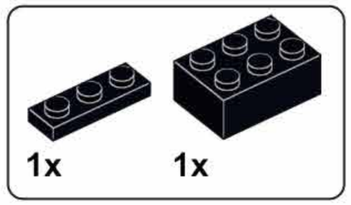

A31

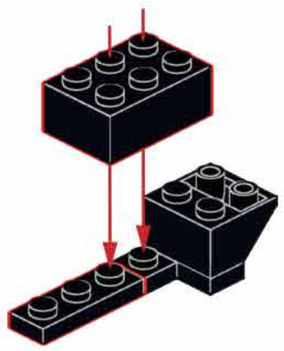

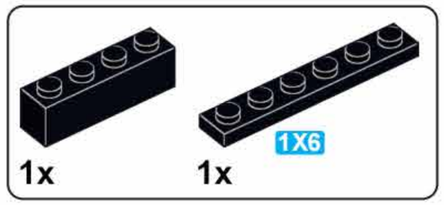

A32

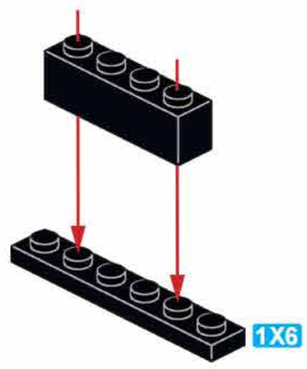

A33

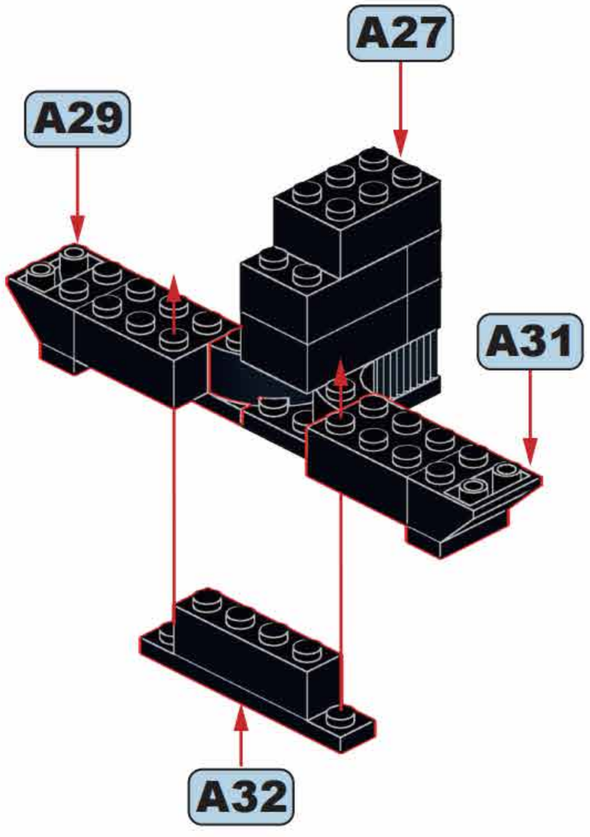

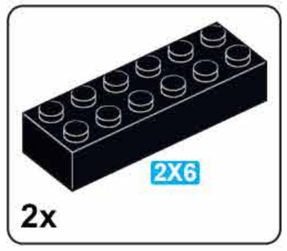

A34

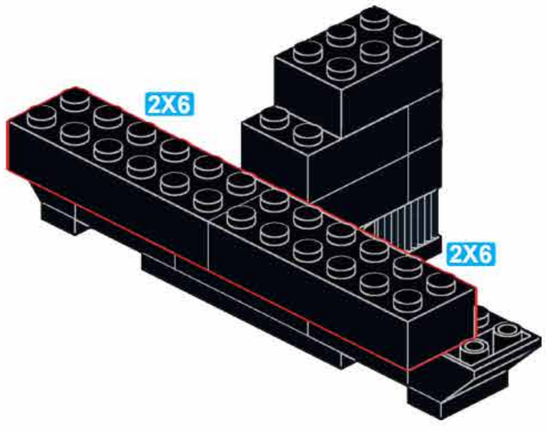

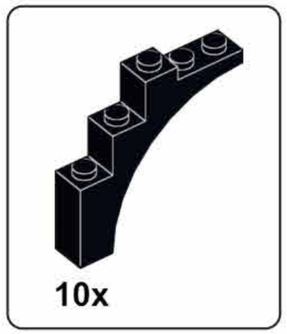

A35

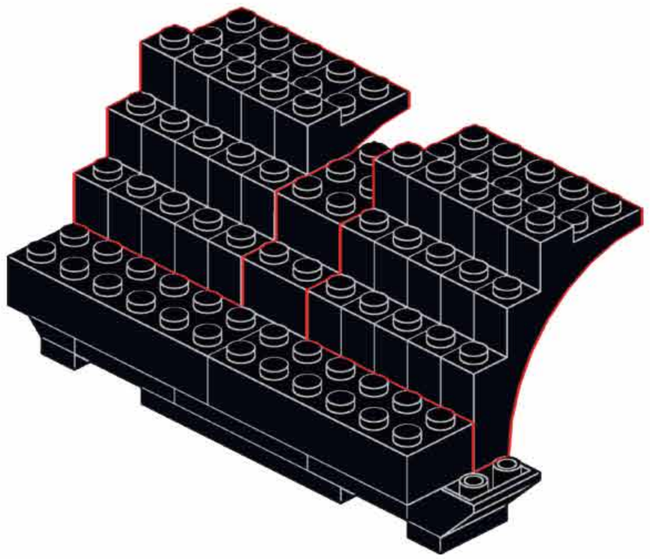

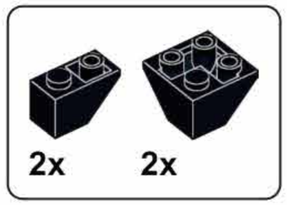

A36

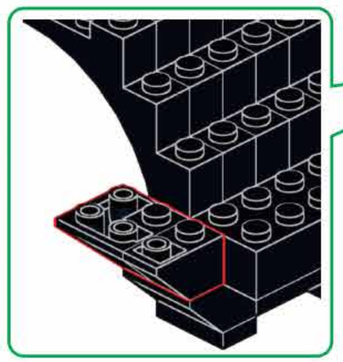

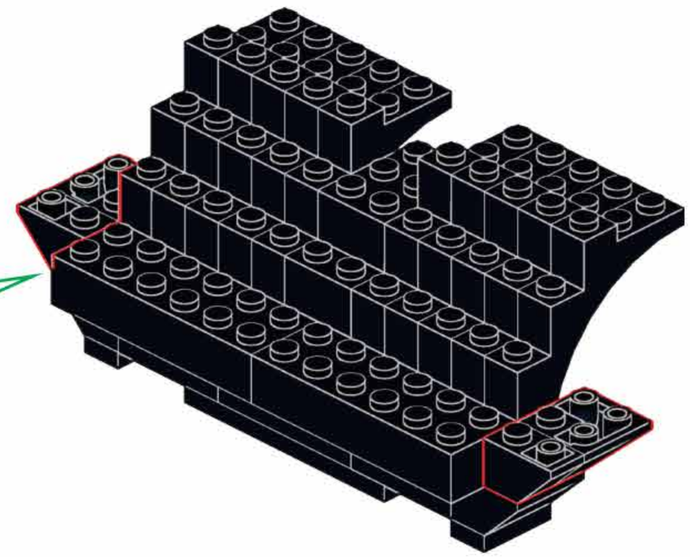

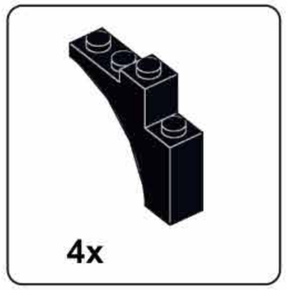

A37

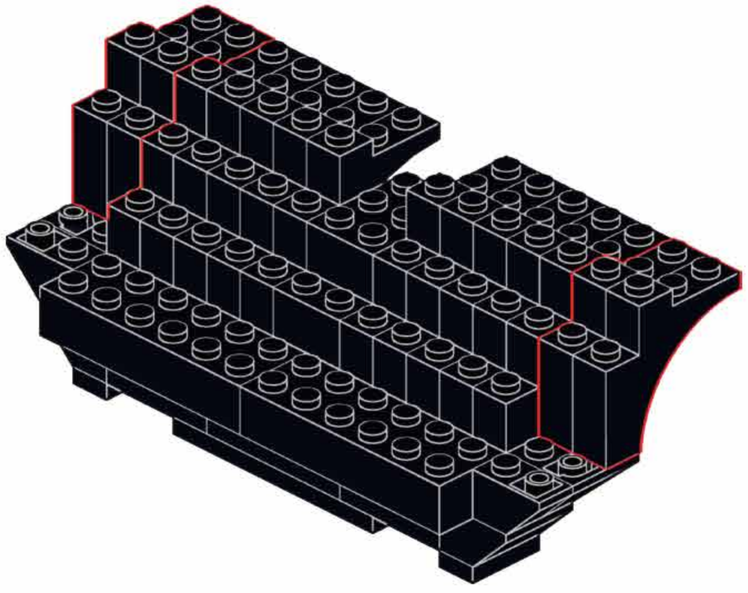

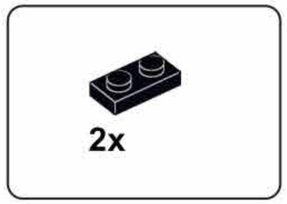

A38

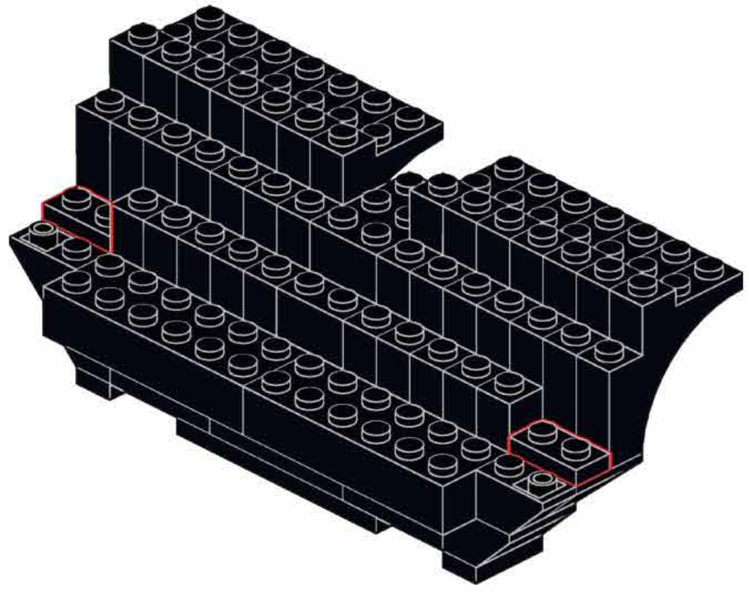

A39

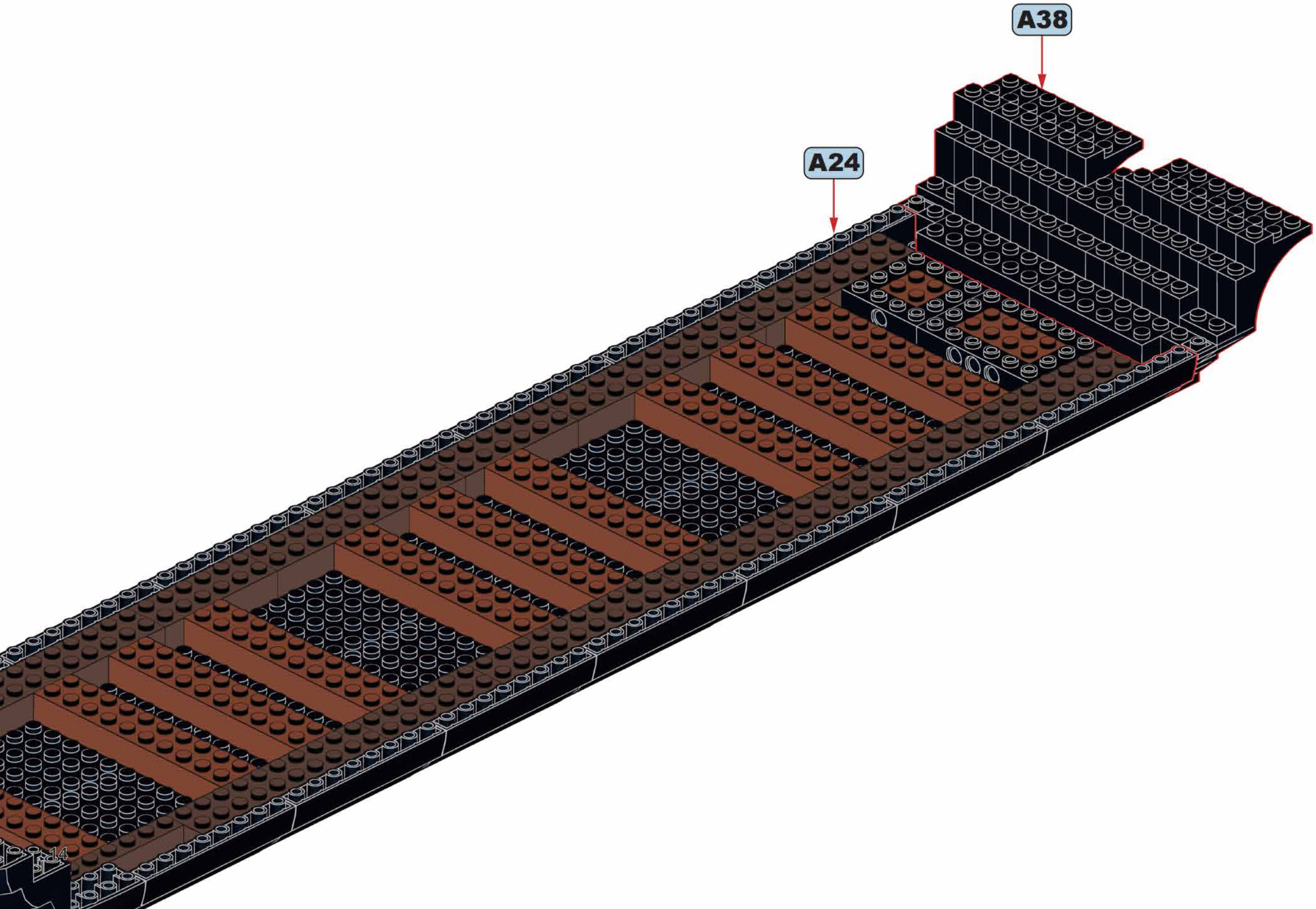

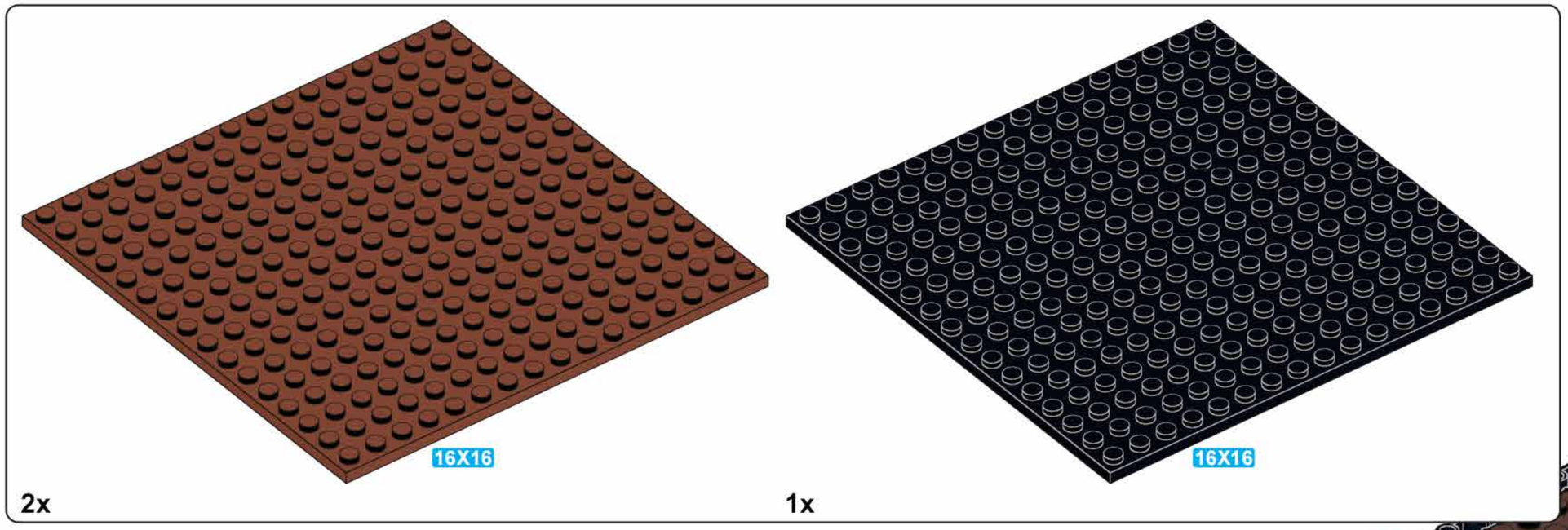

A40

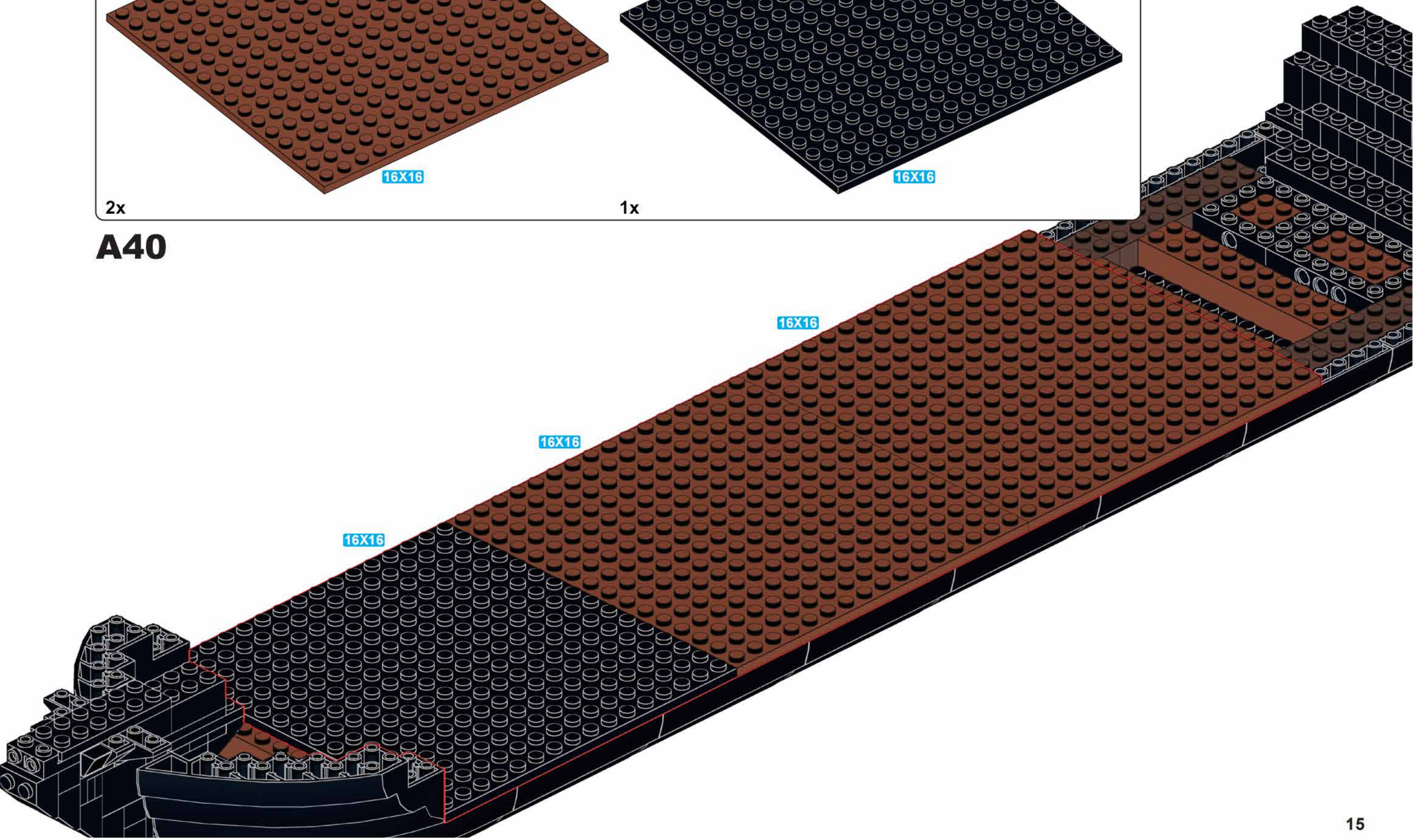

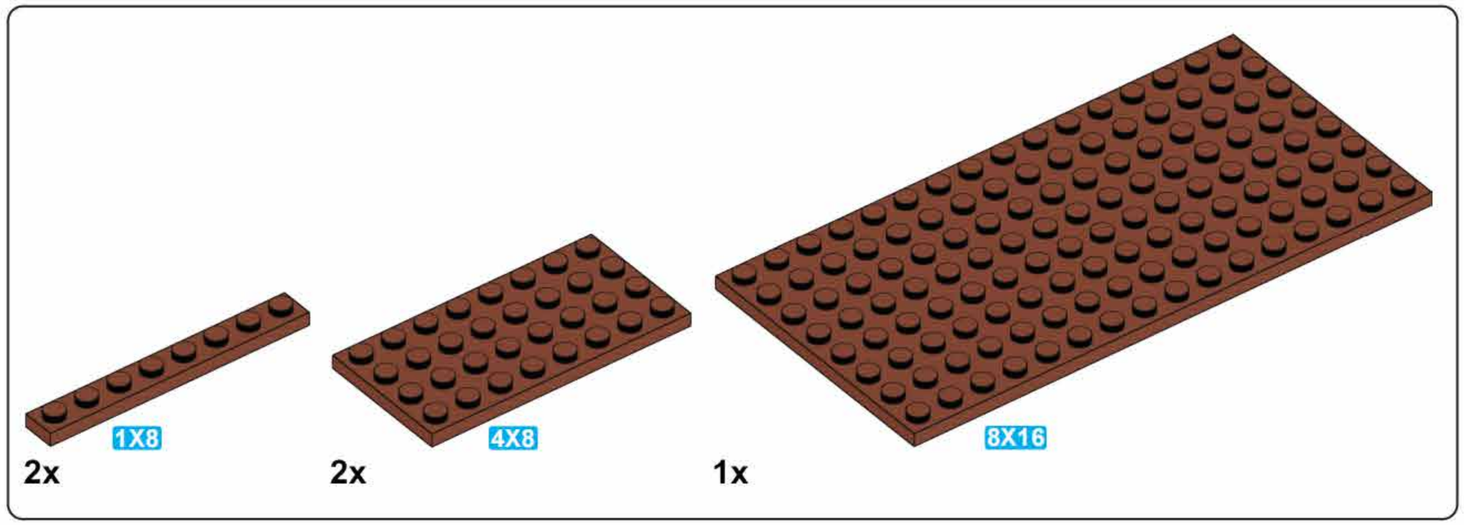

A41

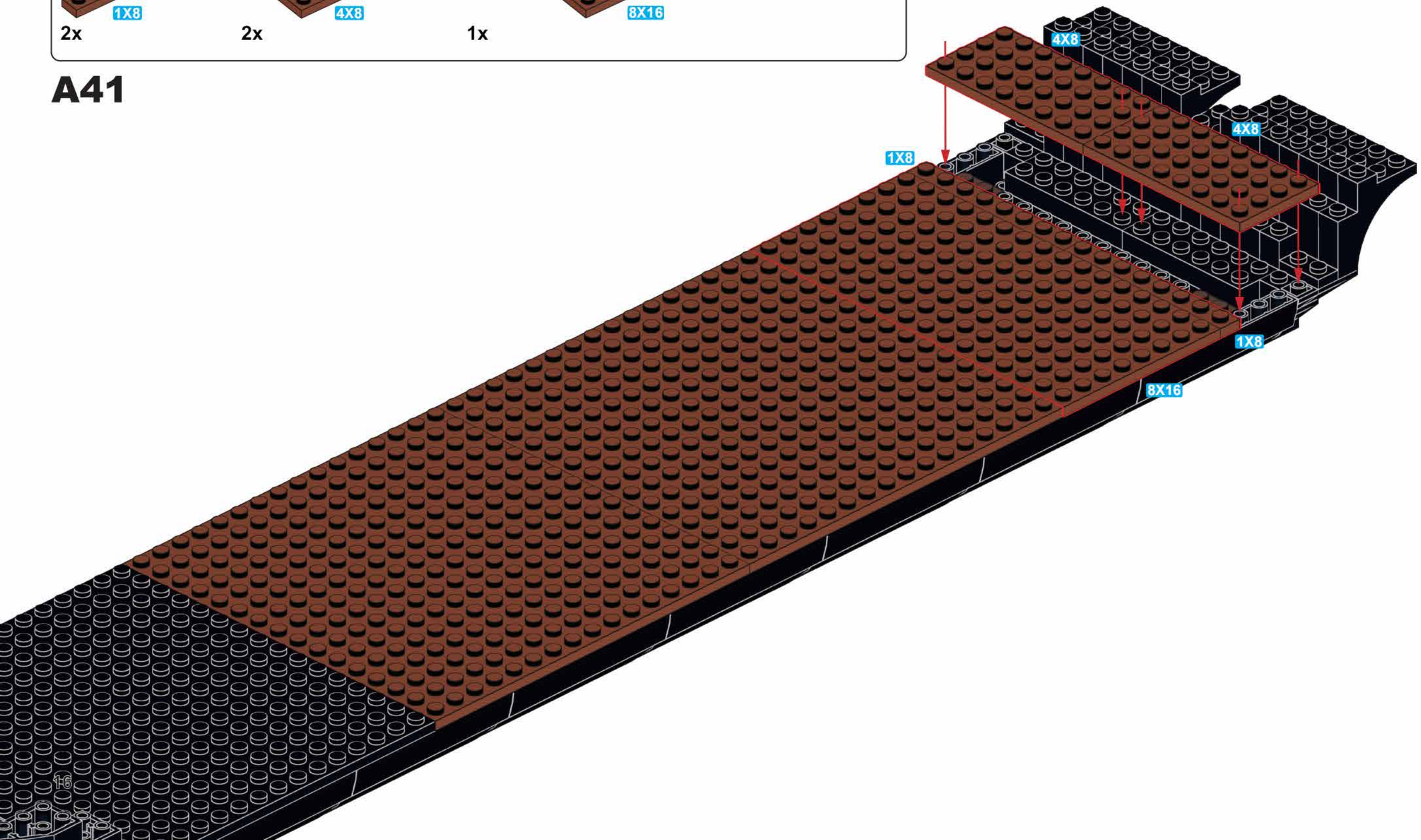

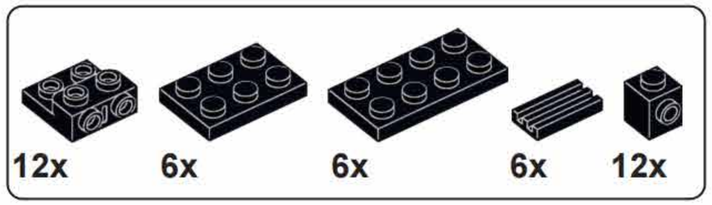
12x
6x
6x
6x
12x

A42

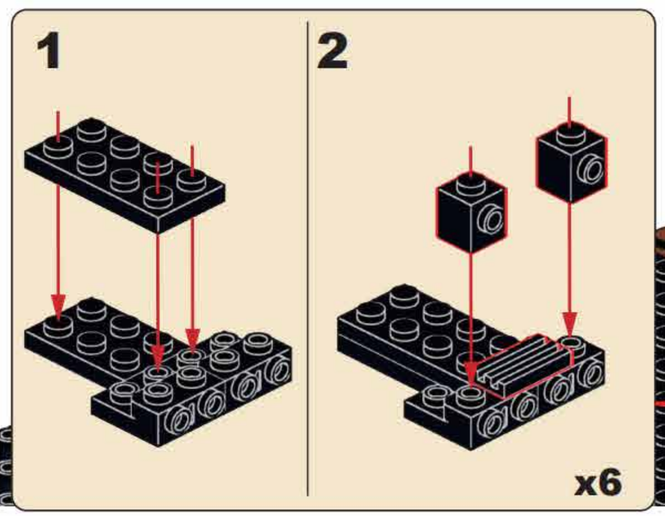
1
2
x6

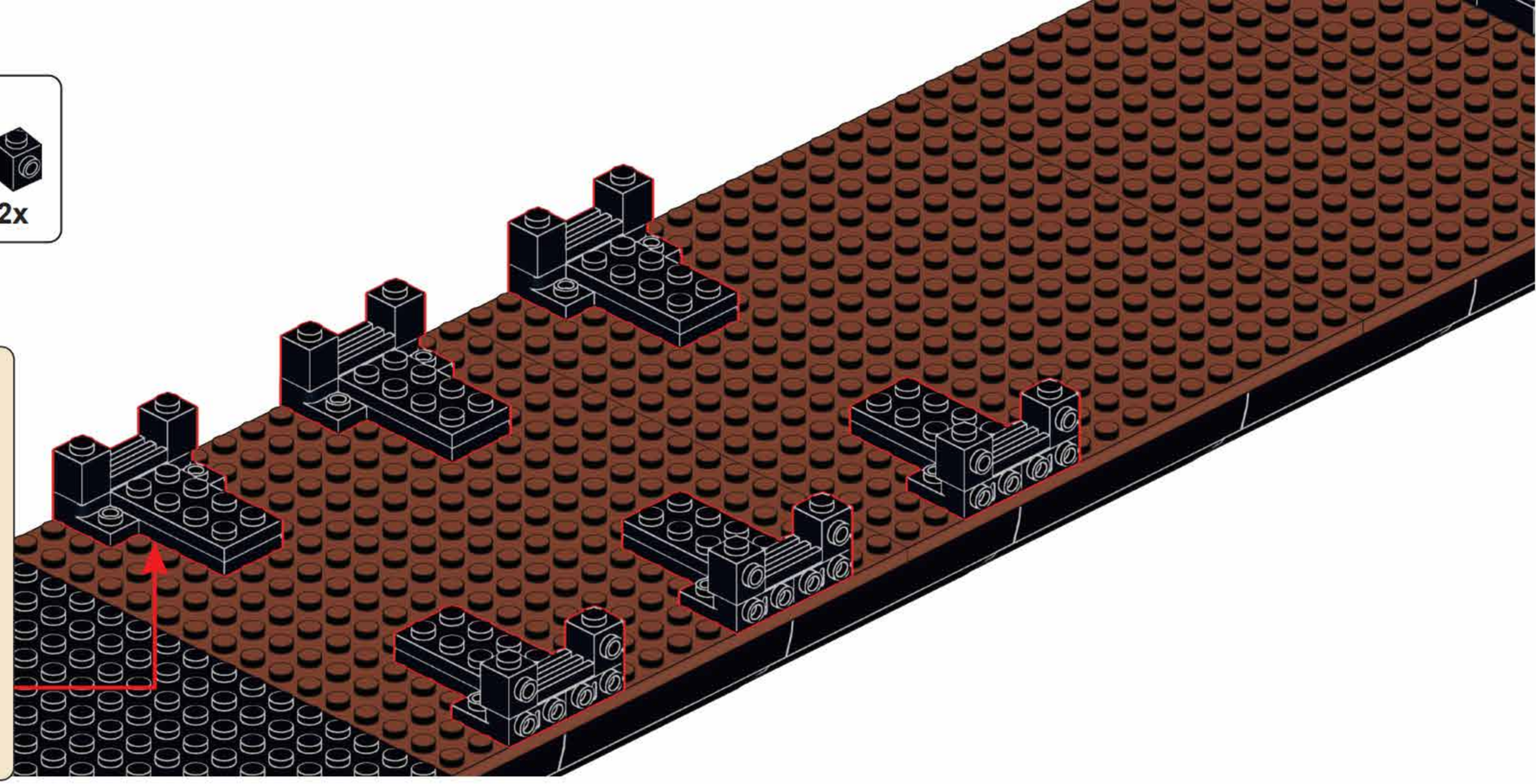

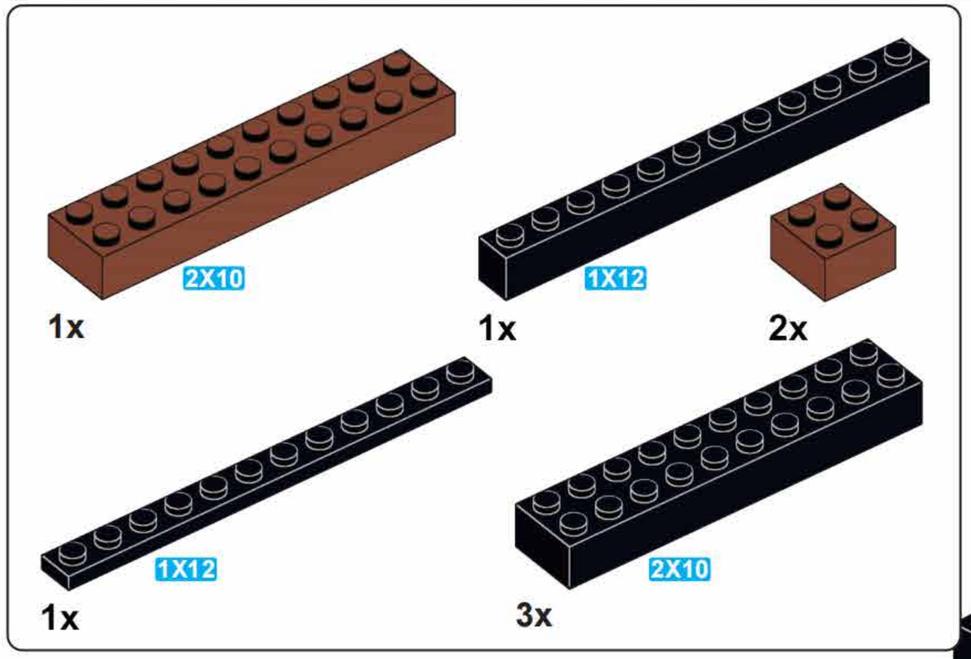
2X10
1x
1X12
1x
2x
1X12
1x
2X10
3x

A43

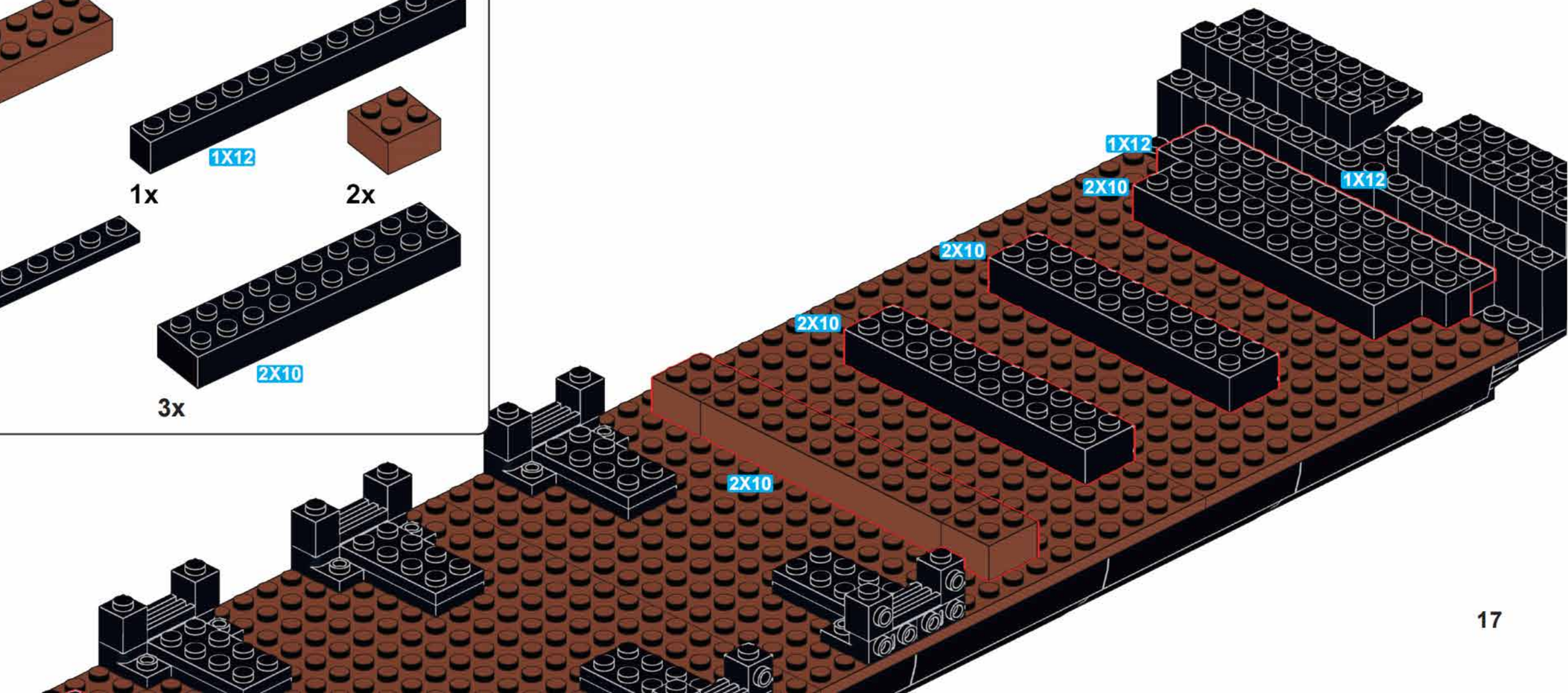
1X12
2X10
1X12
2X10
2X10
2X10

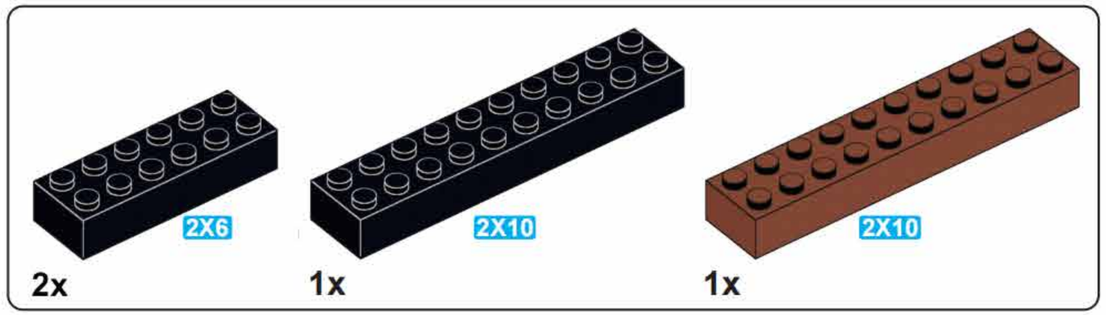

A44

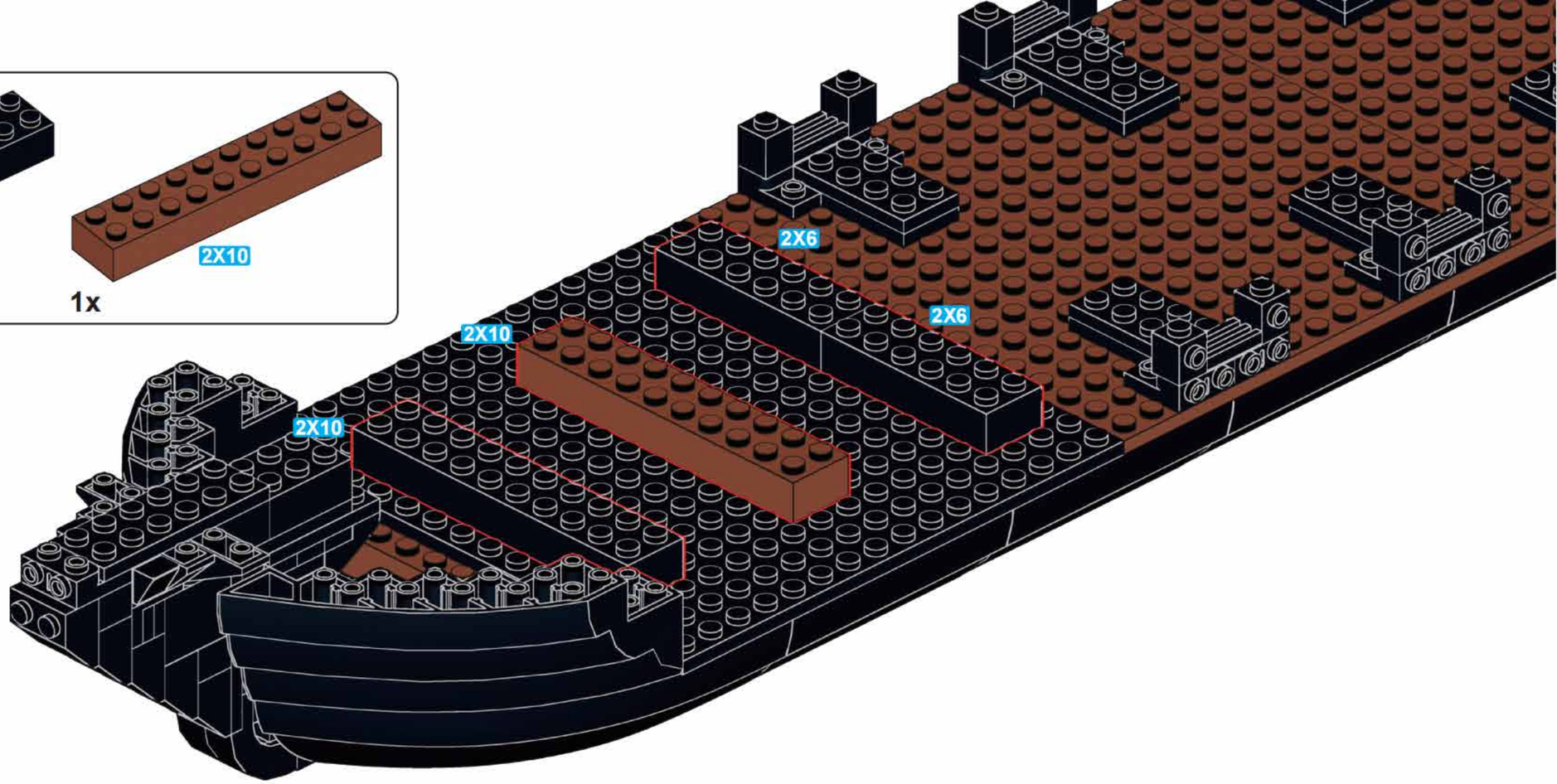

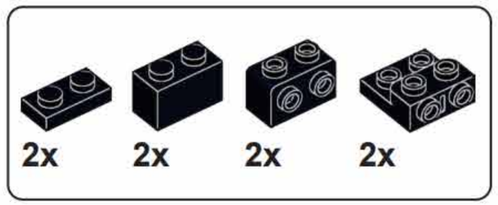

A45

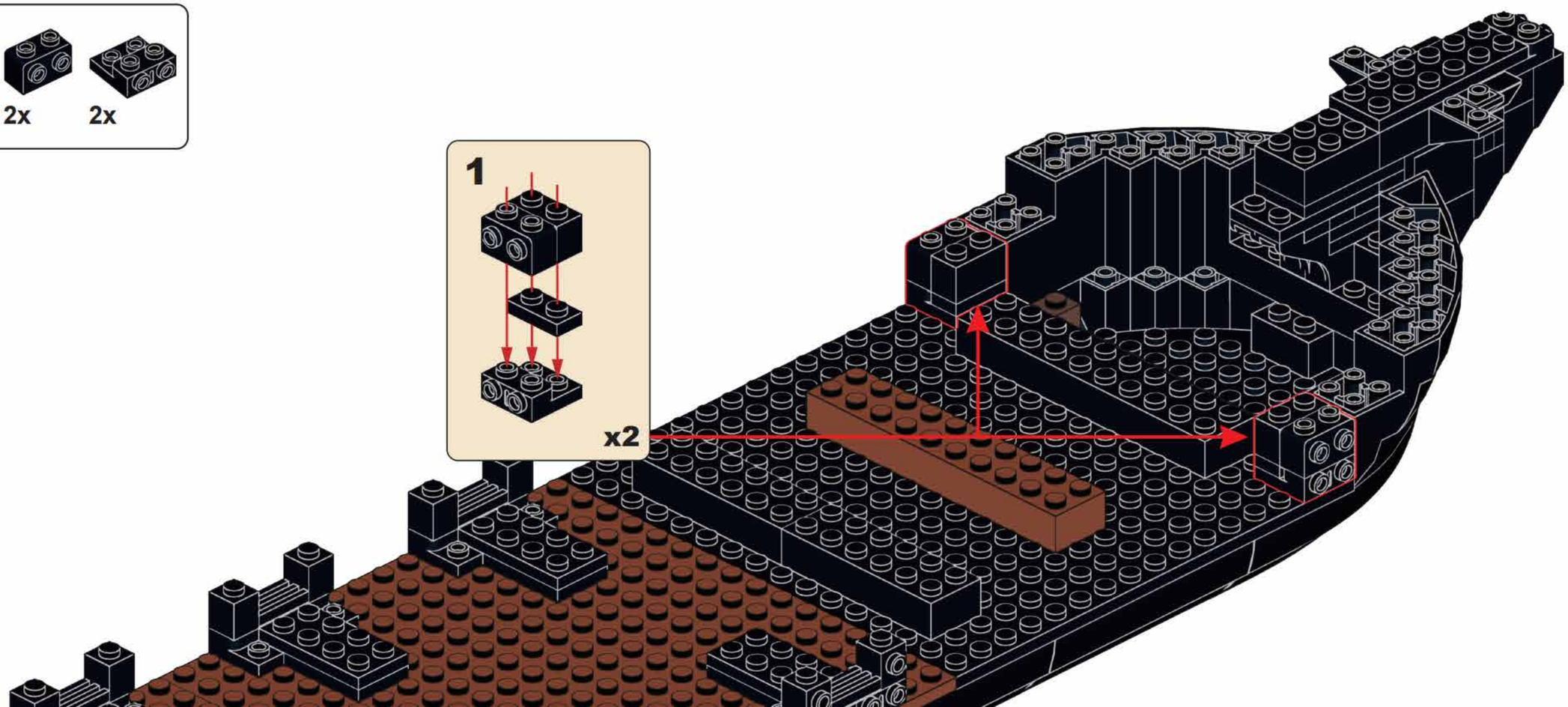

2x

A46

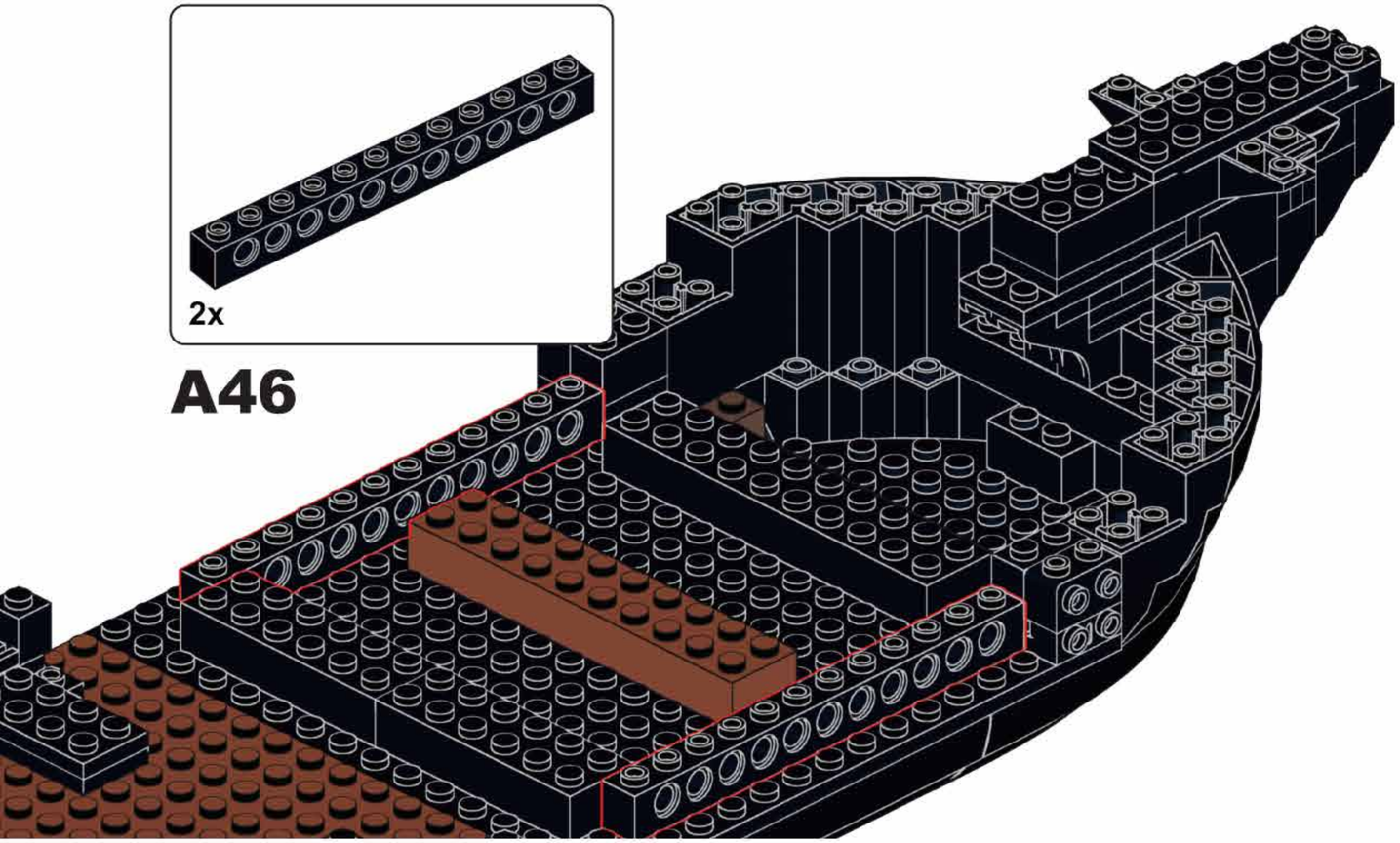

2x

A47

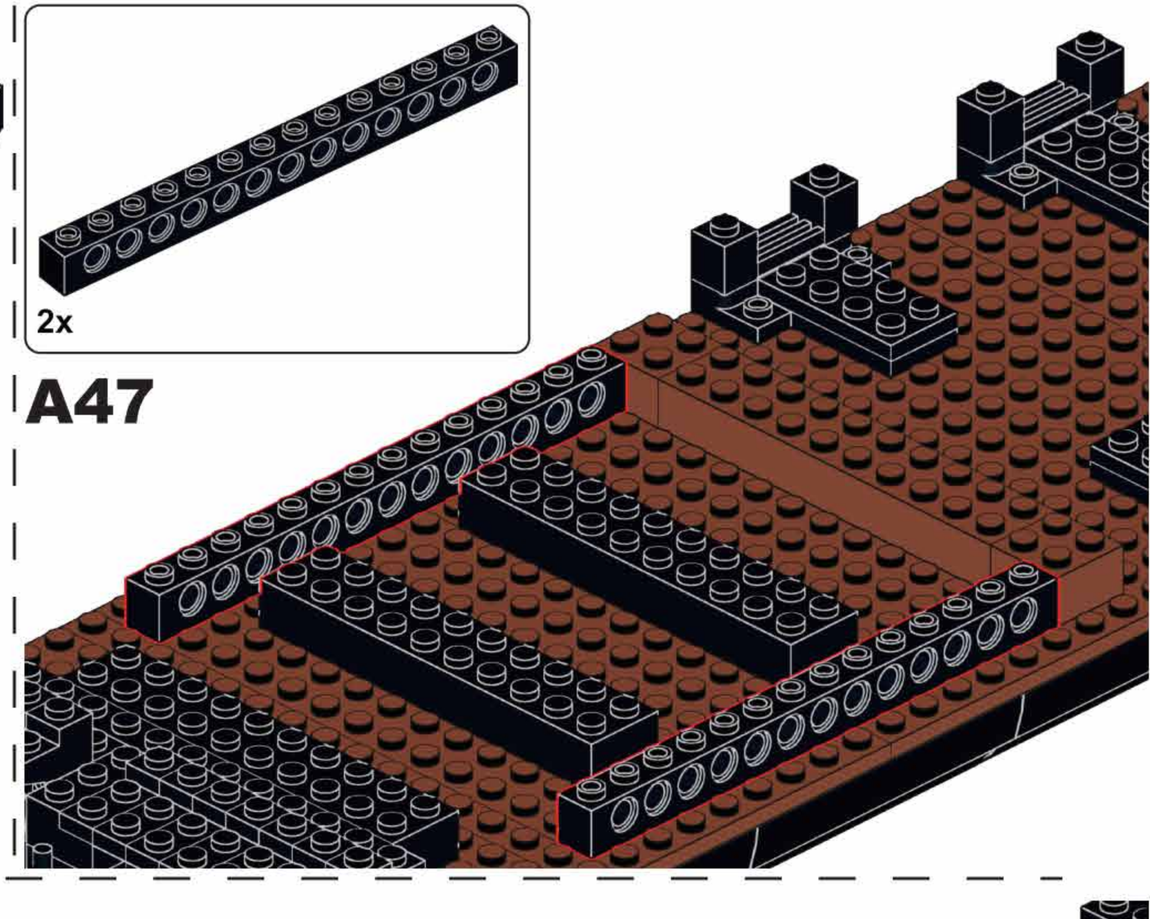

4x 14x

A48

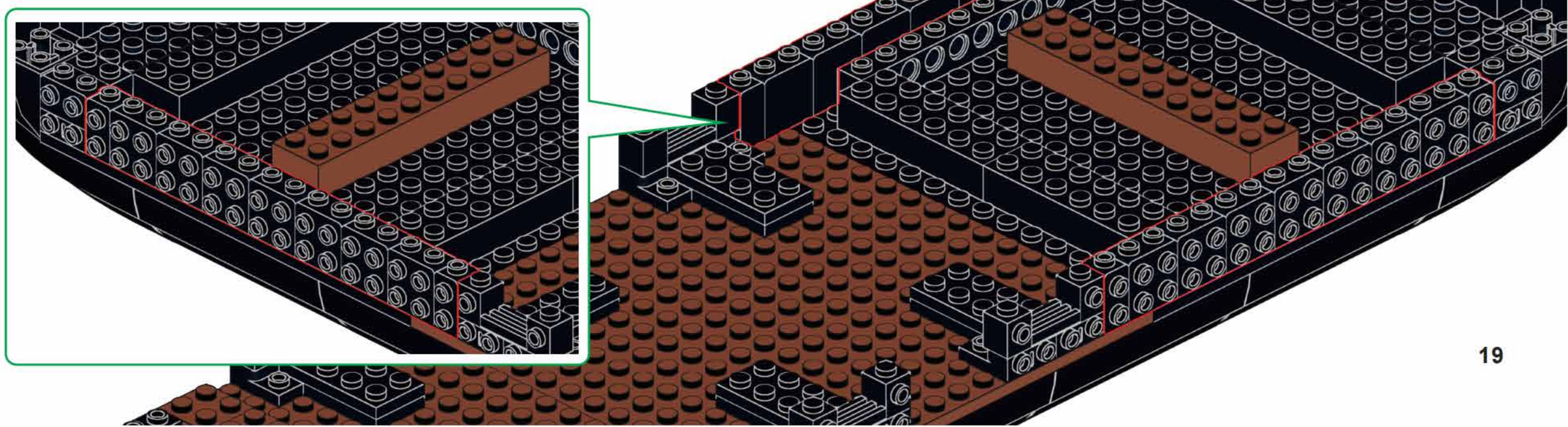

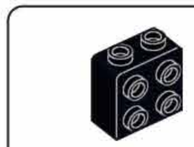

A49

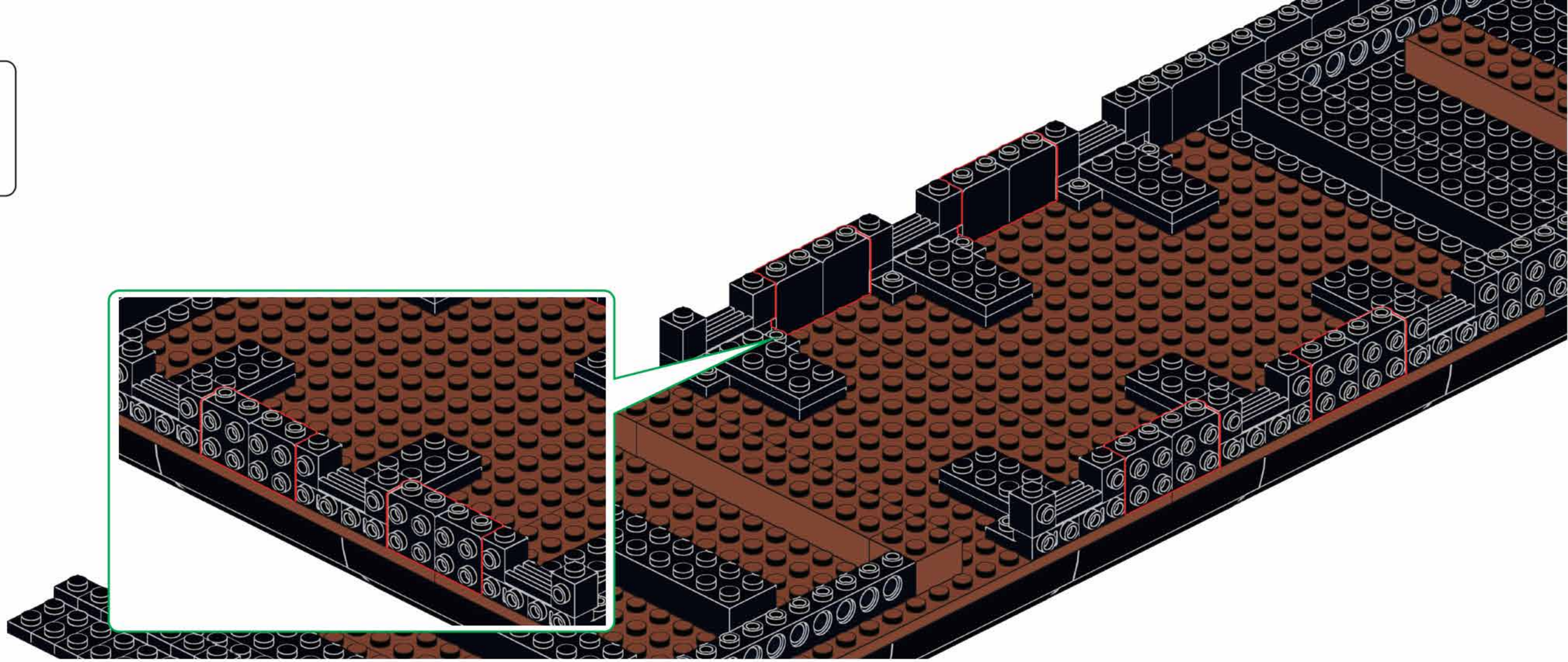

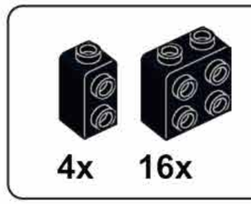

A50

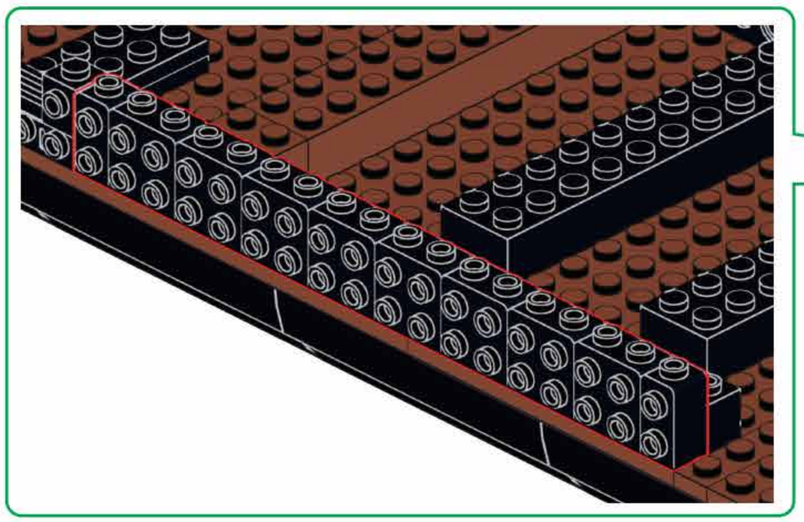

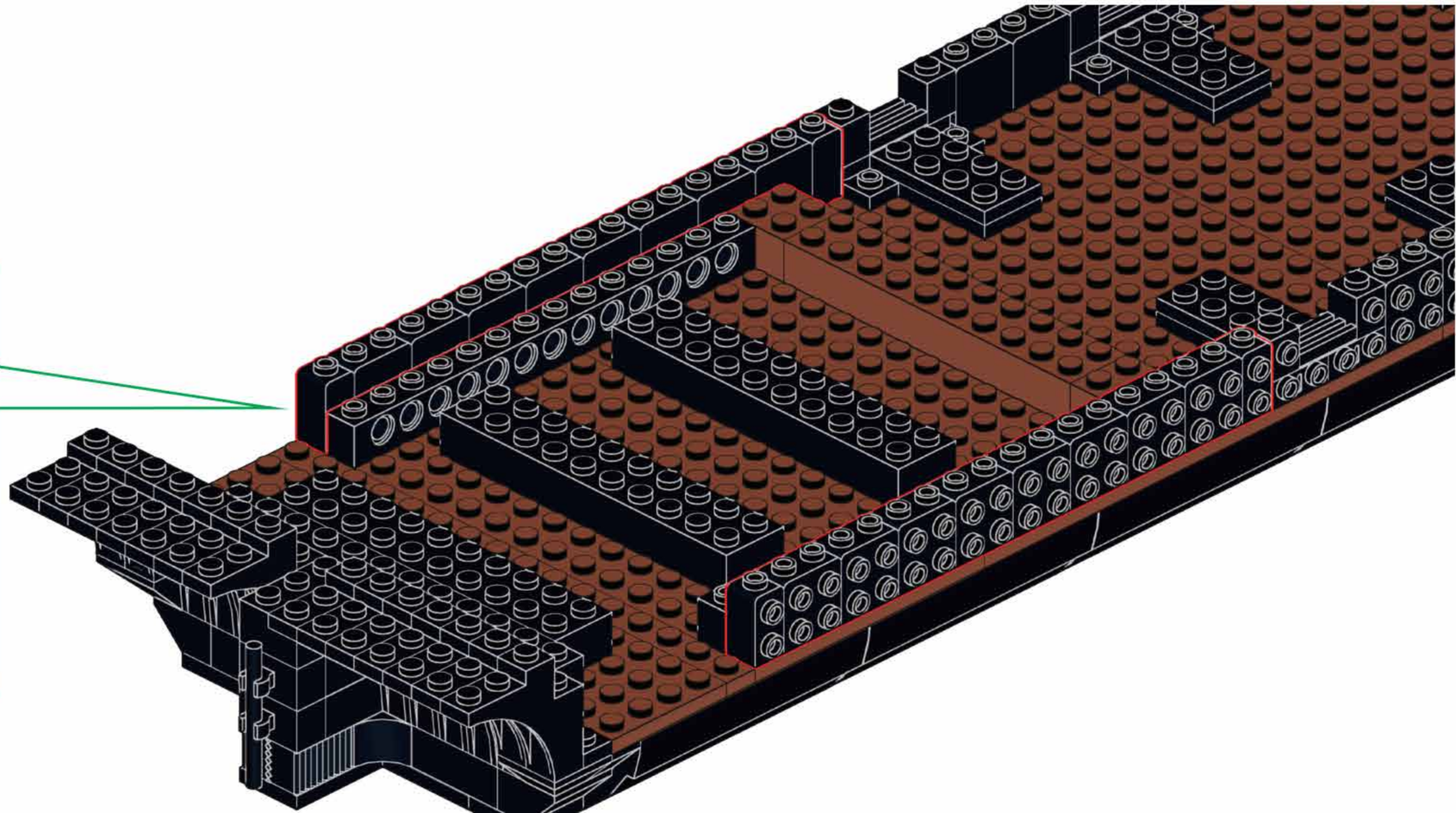

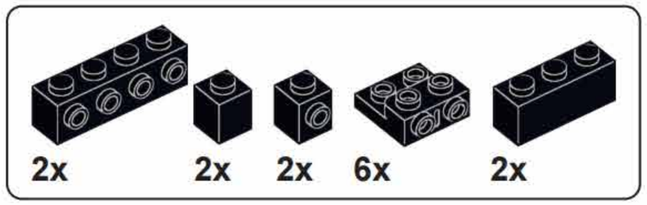

A51

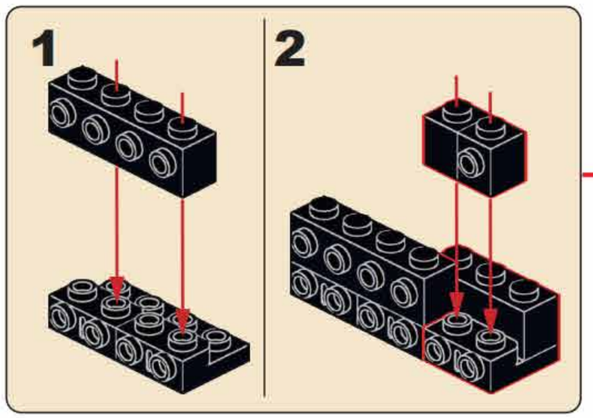

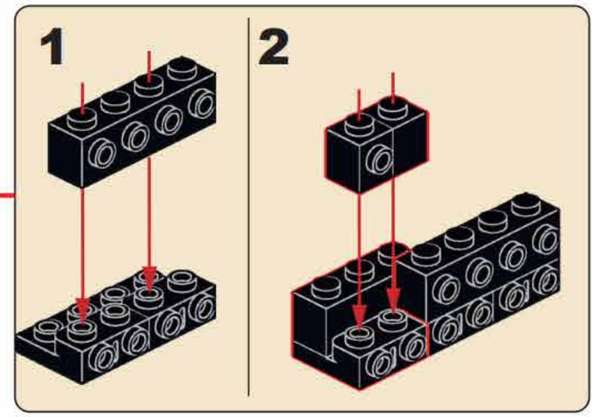

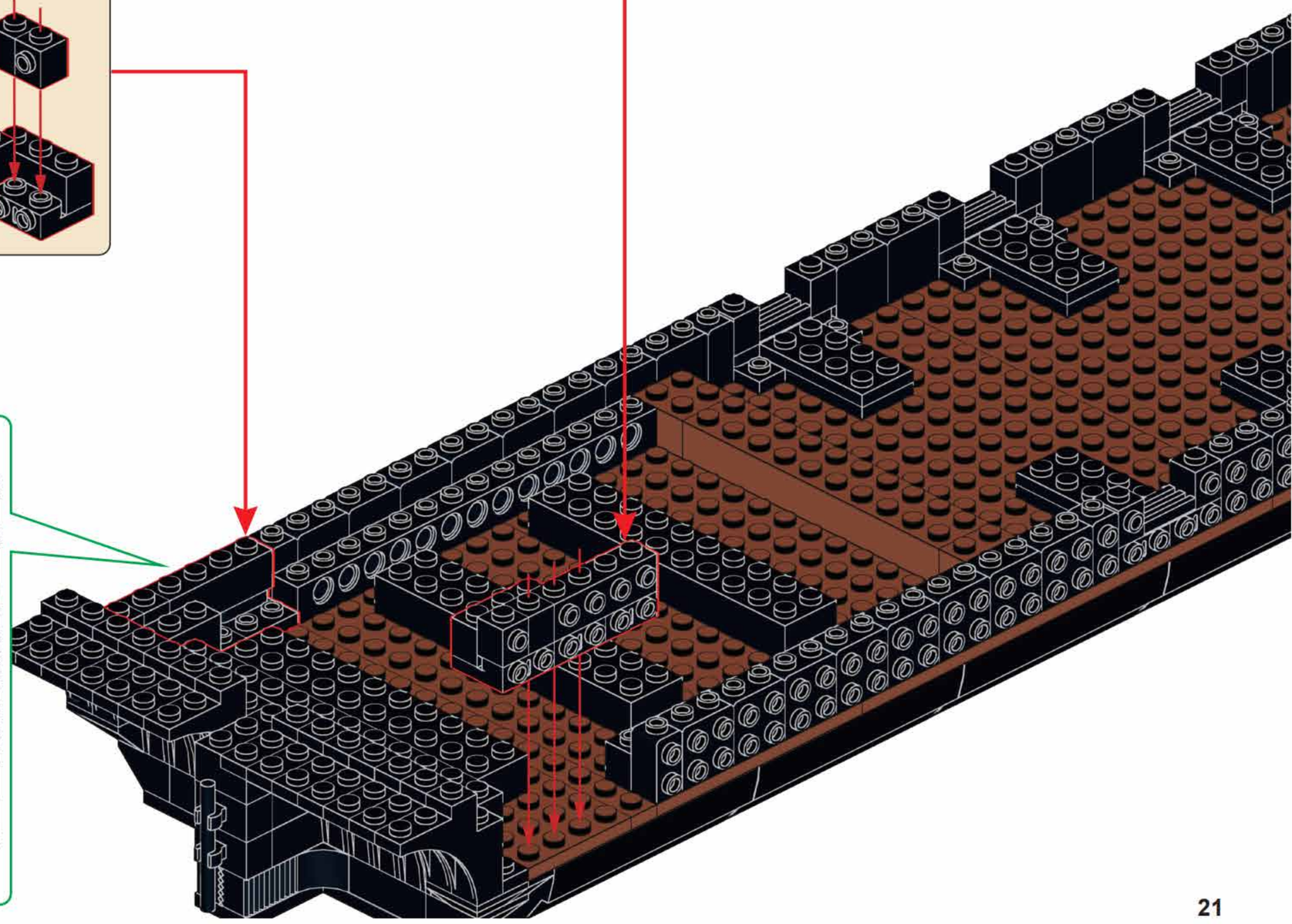

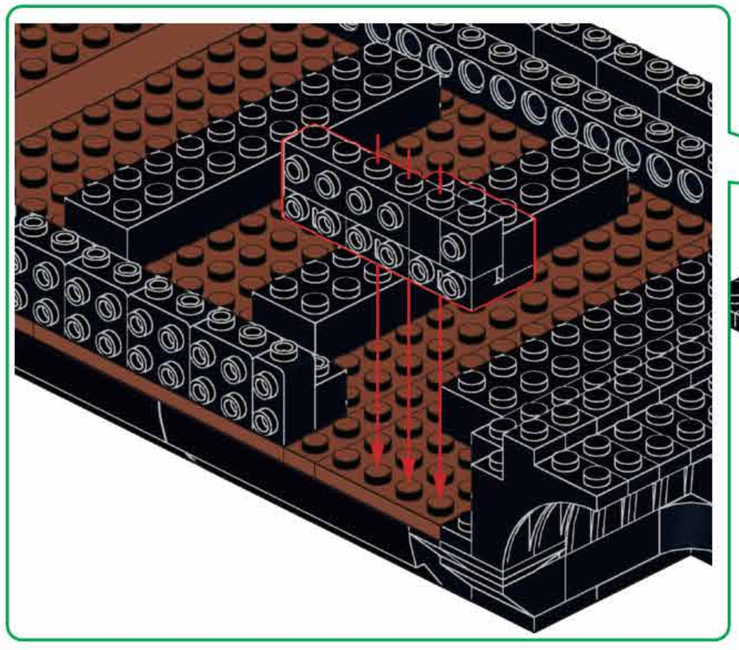

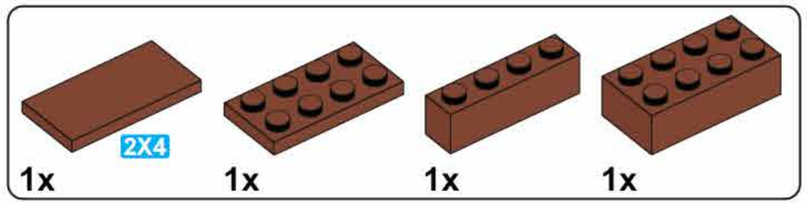

A52

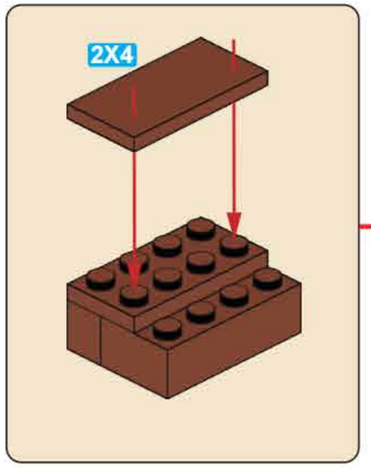

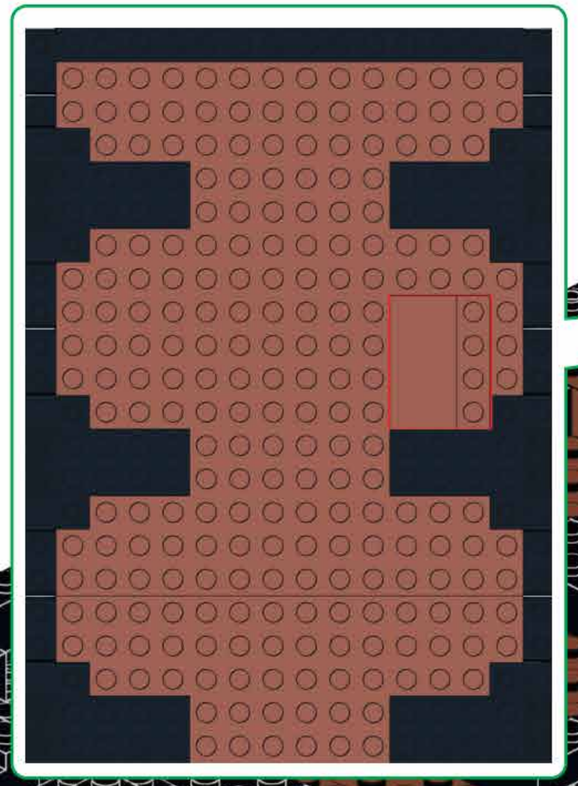

2x

B1

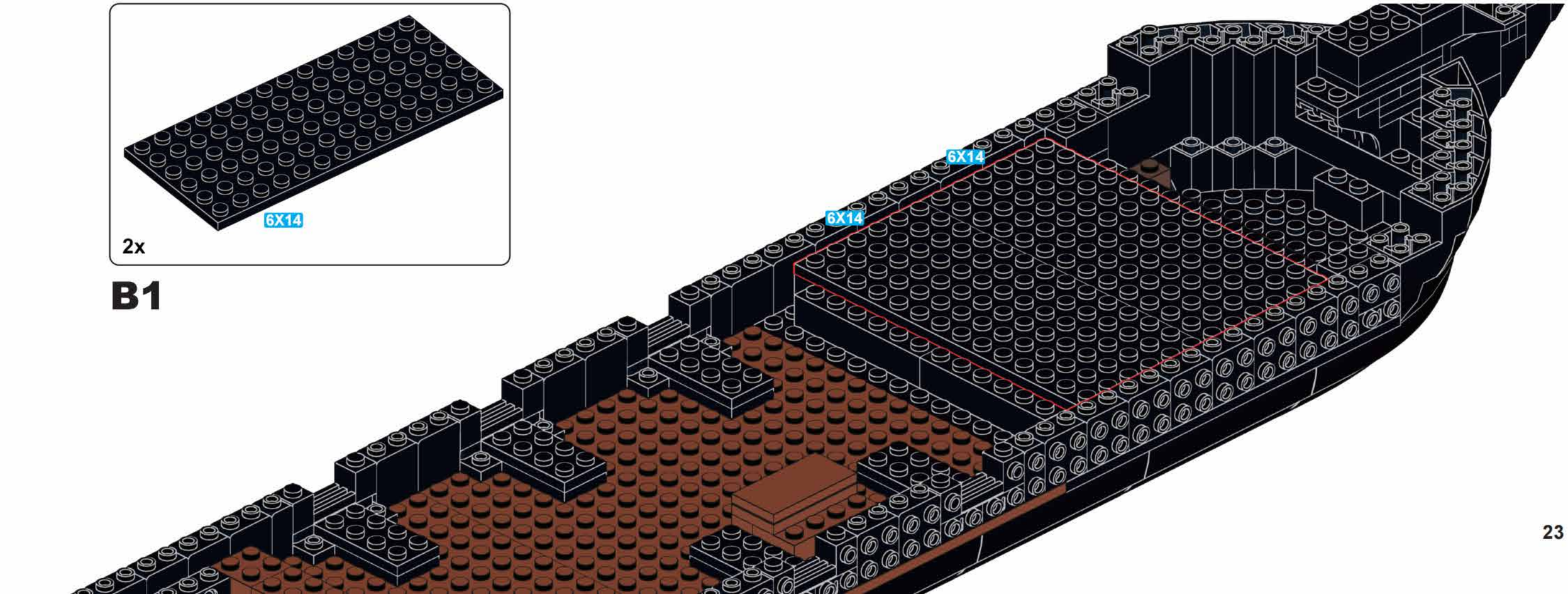

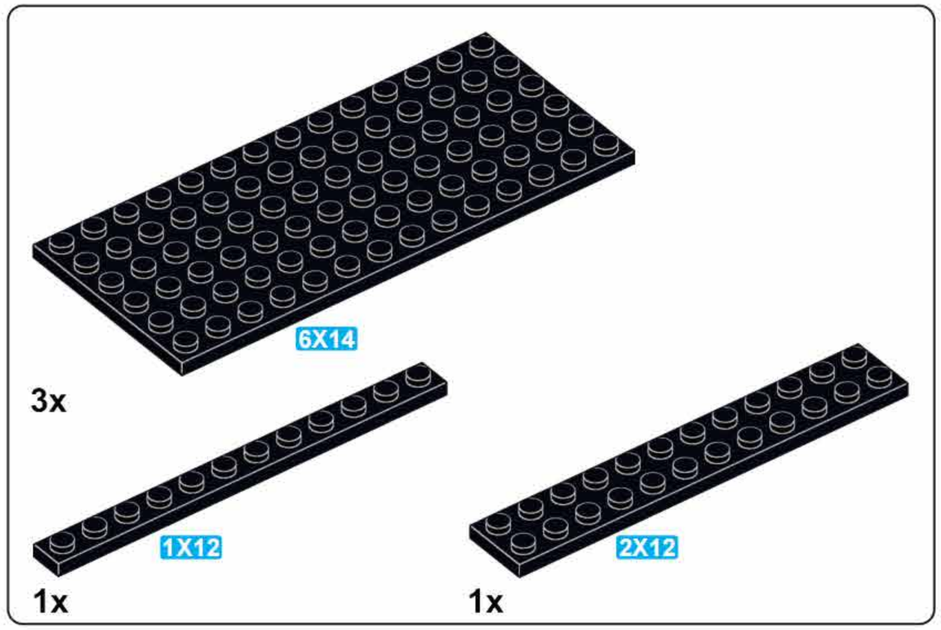

B2

B3

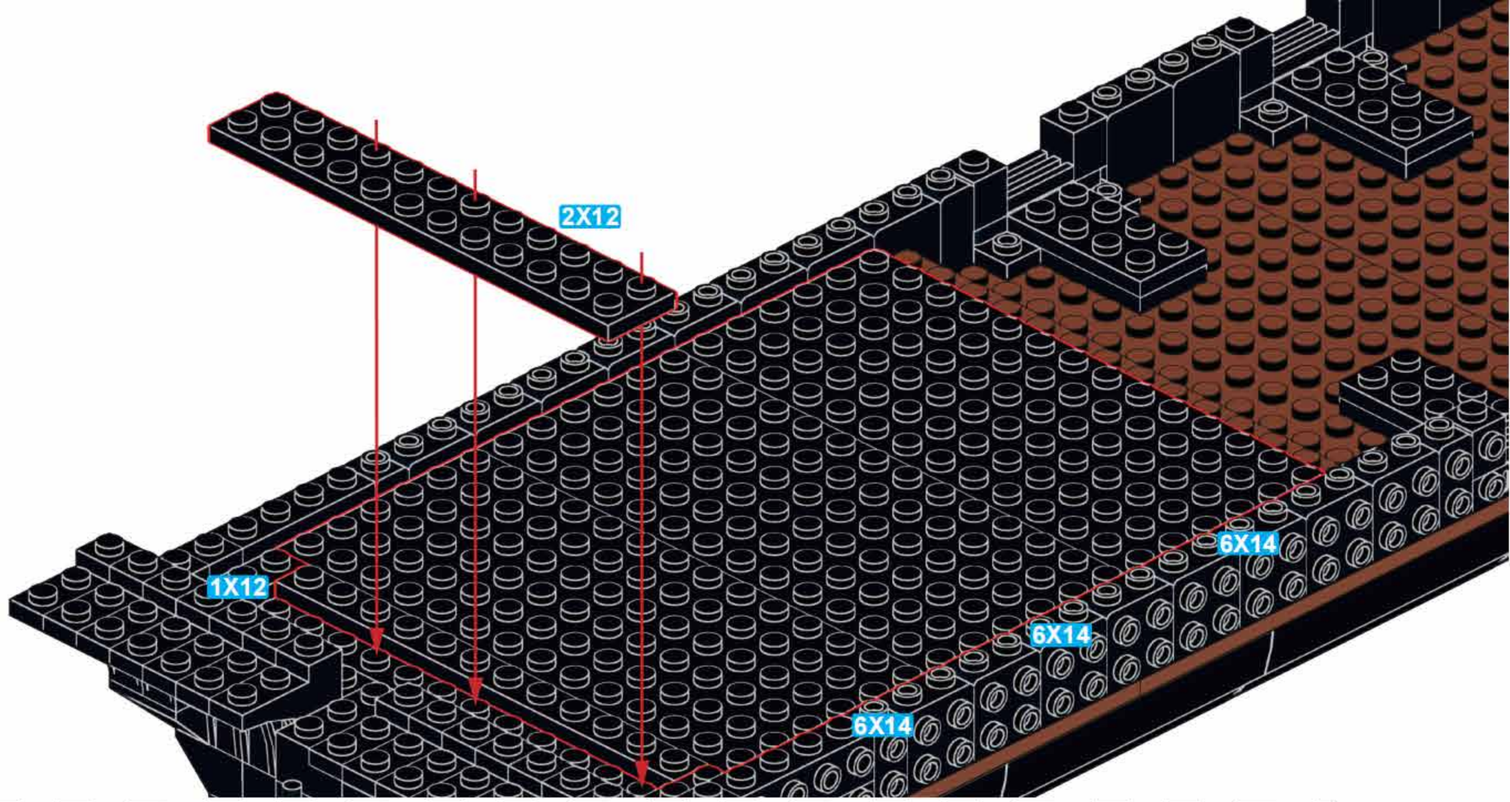

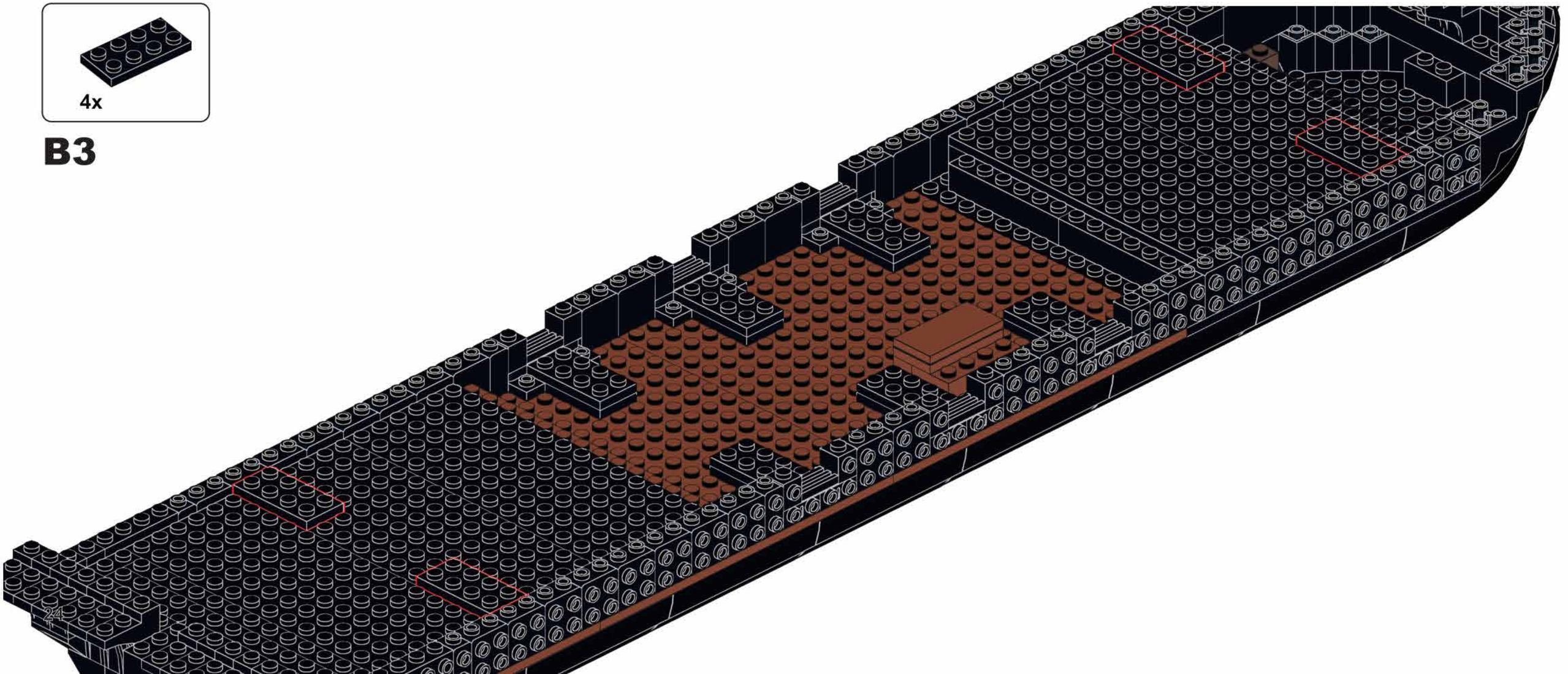

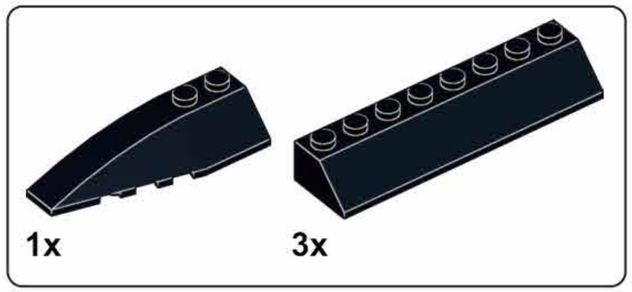

B4

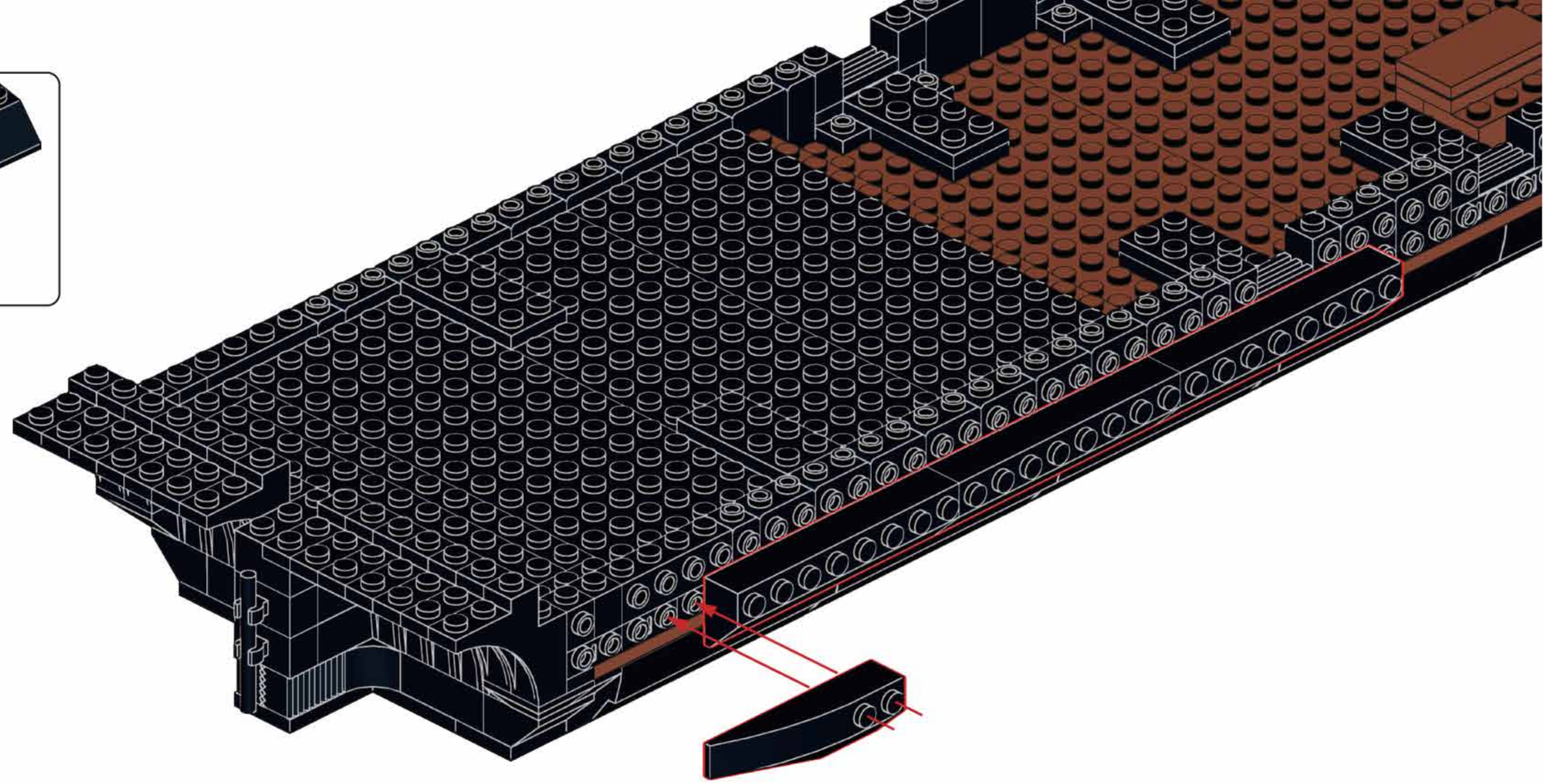

B5

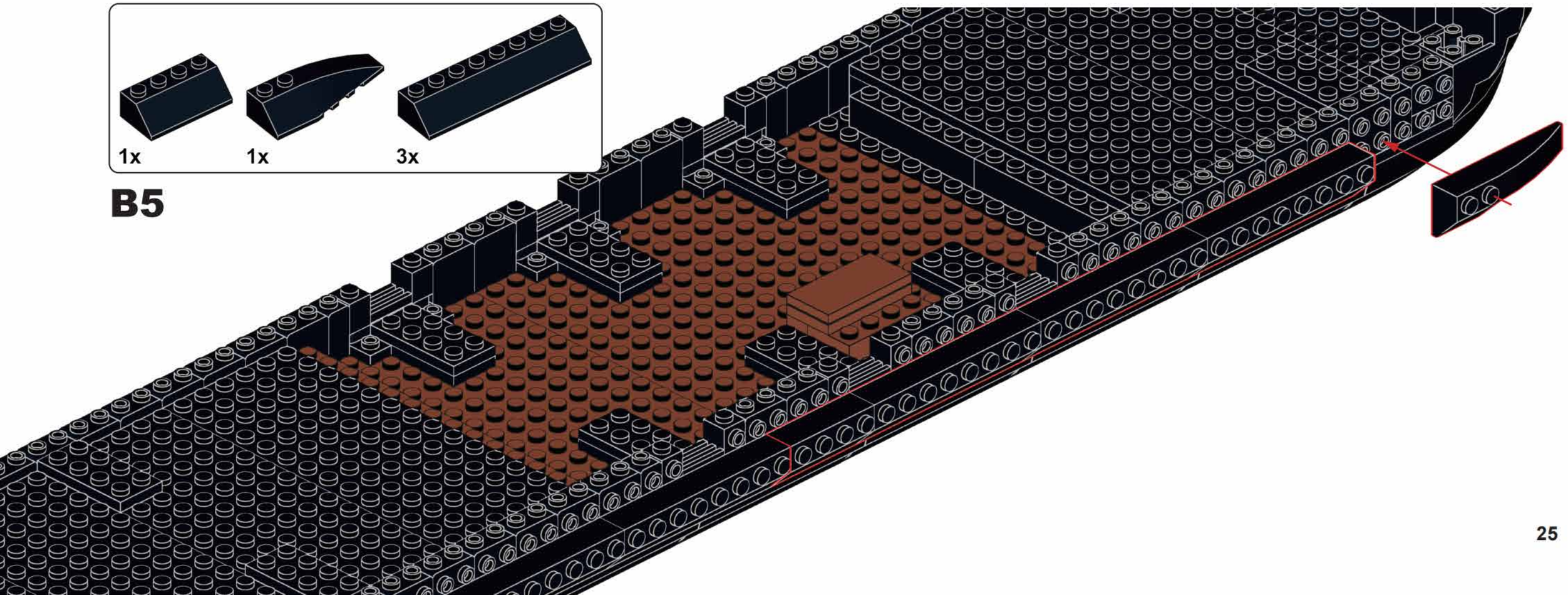

7x

B6

2x 1x 3x 1X4 3x 1X6 2x 1X8

B7

1X4
1X6
1X6
1X6
1X8
1X4
1X8
1X4

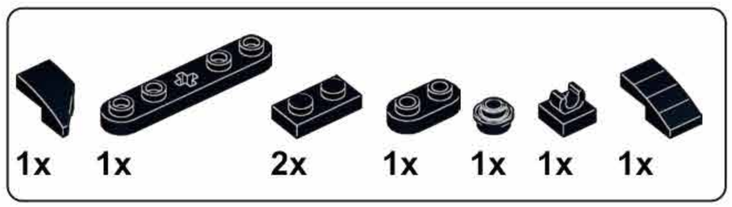

B8

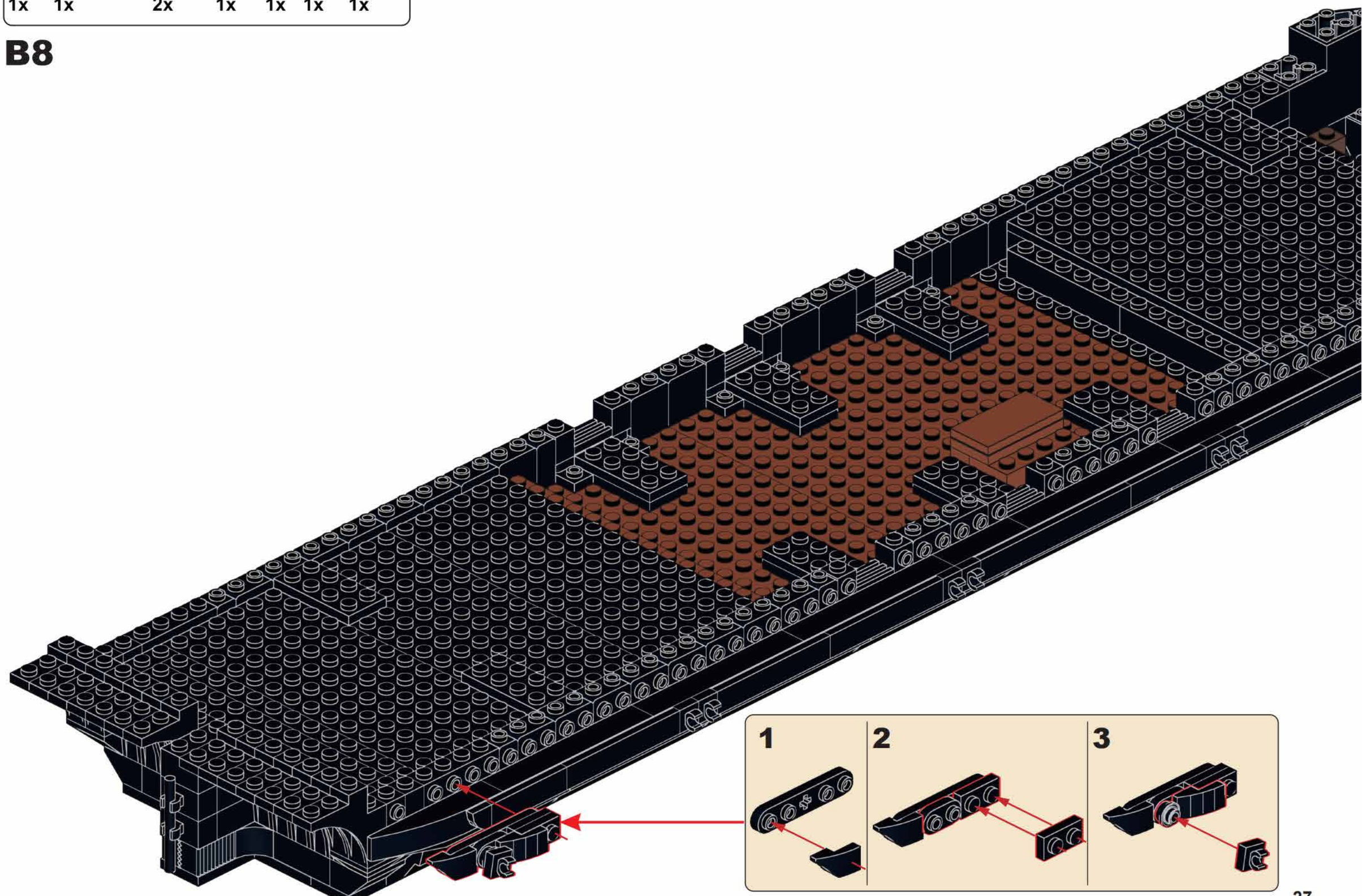

B9

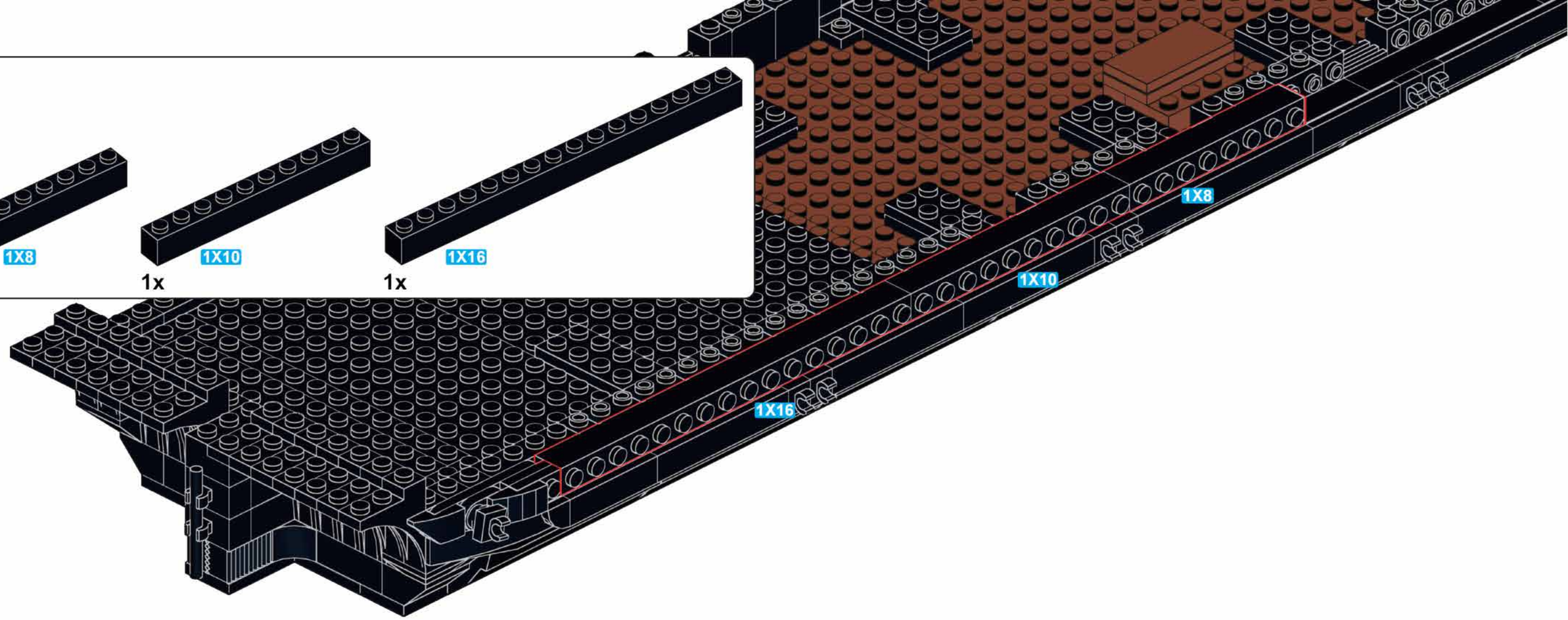

B10

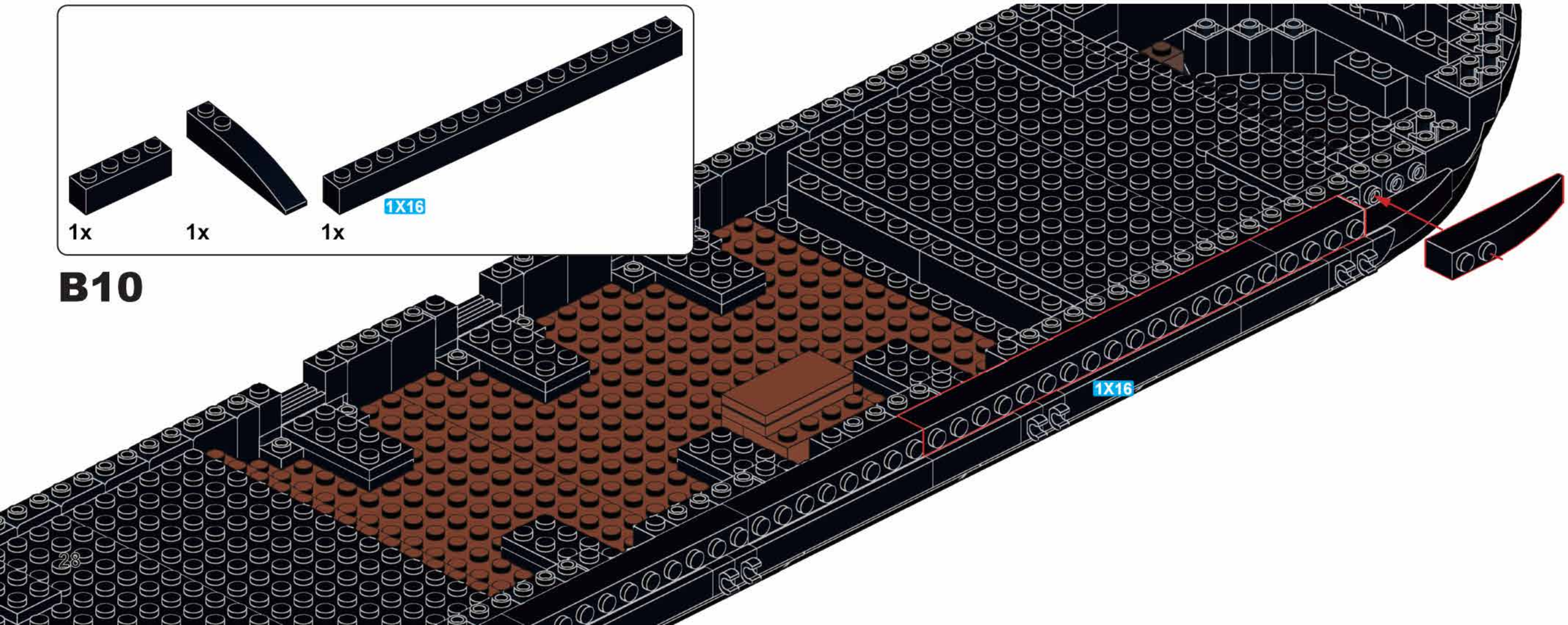

8x

B11

1x 1x 3x 3x 2x

1X4 1X6 1X8

B12

1X6 1X4 1X6 1X6 1X8 1X4 1X8 1X4

B13

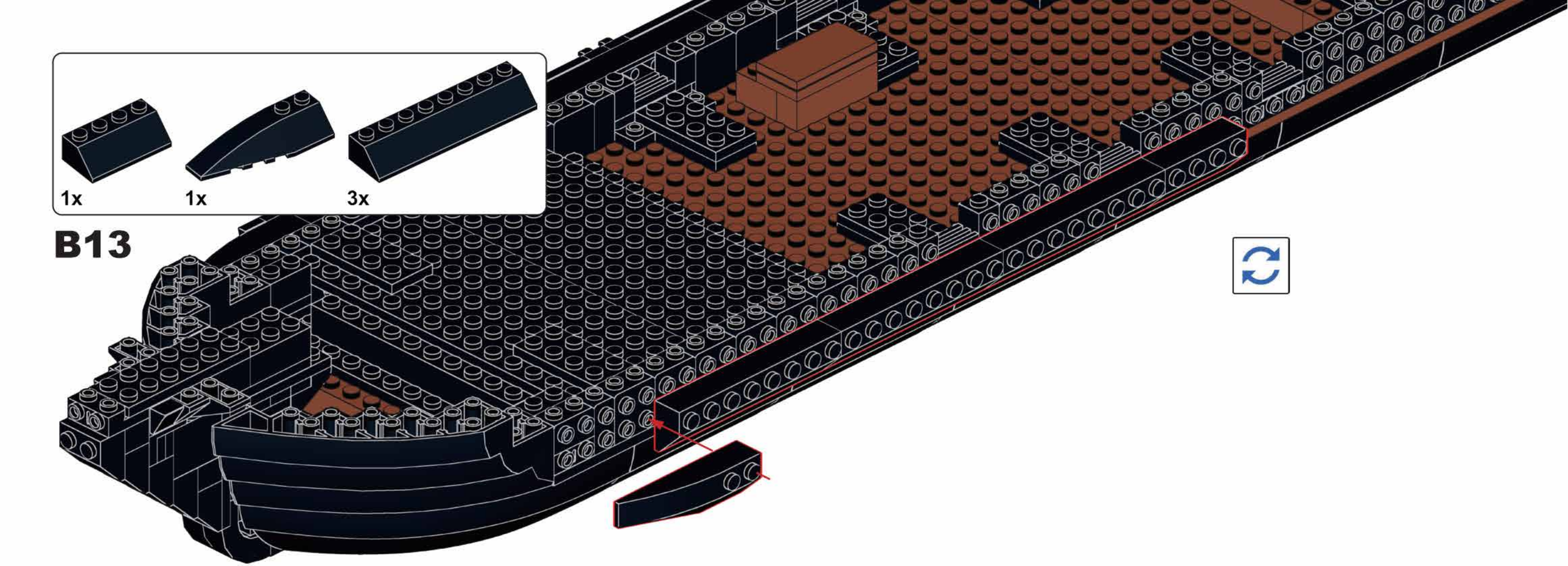

B14

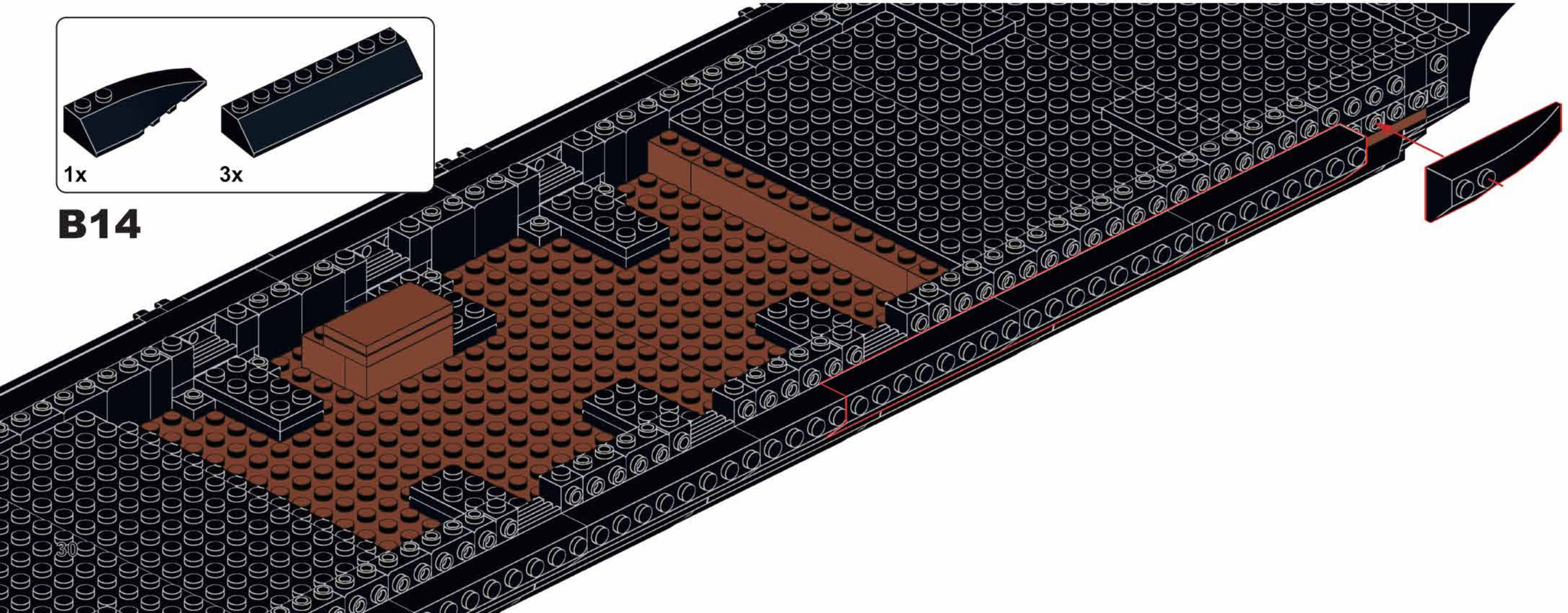

8x

B15

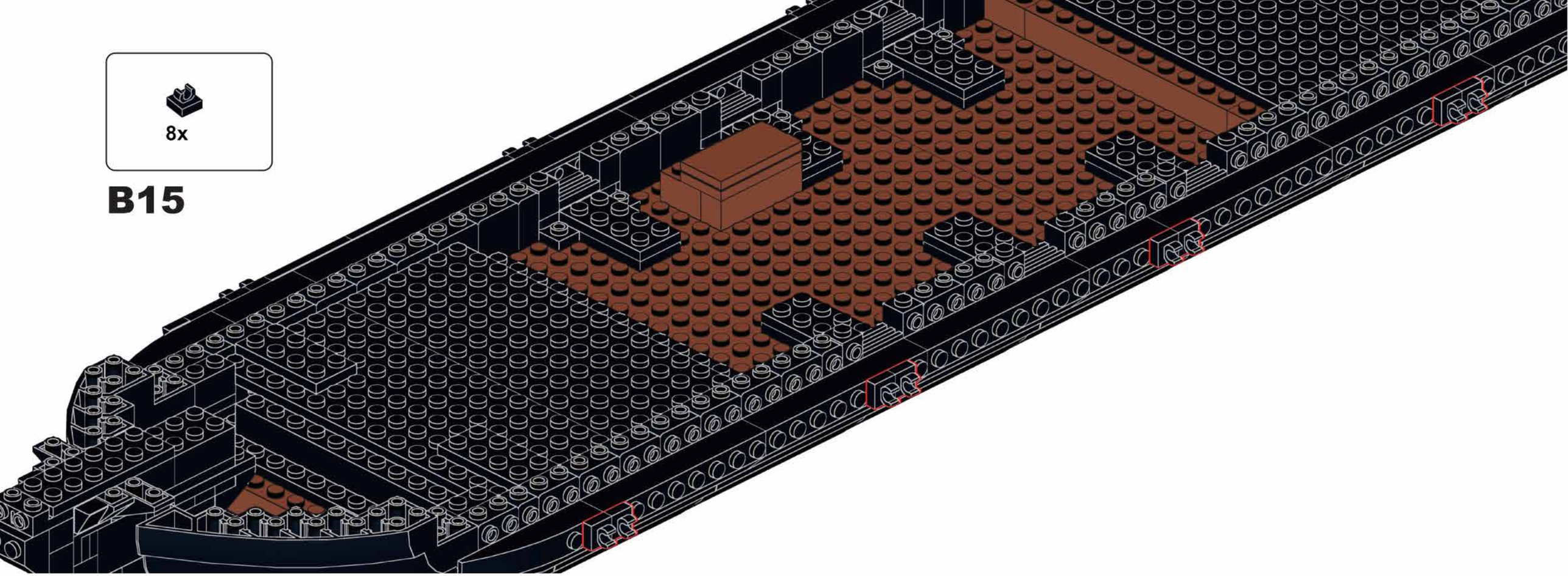

2x 3x 1X4 3x 1X6 2x 1X8

B16

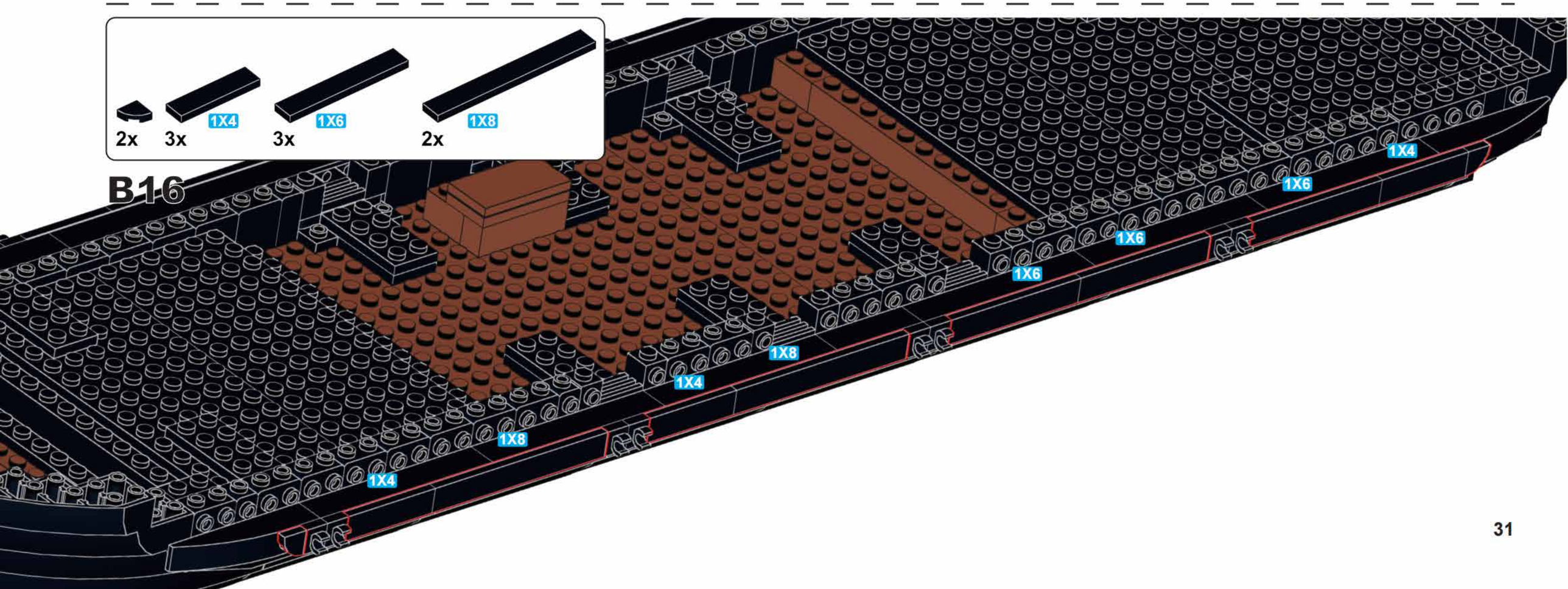

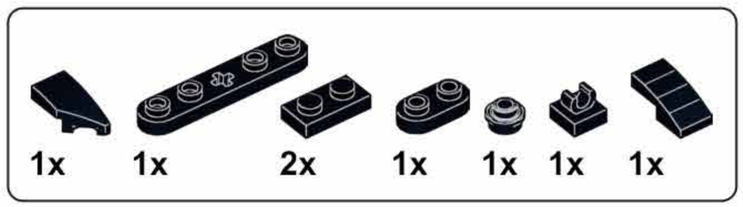

B17

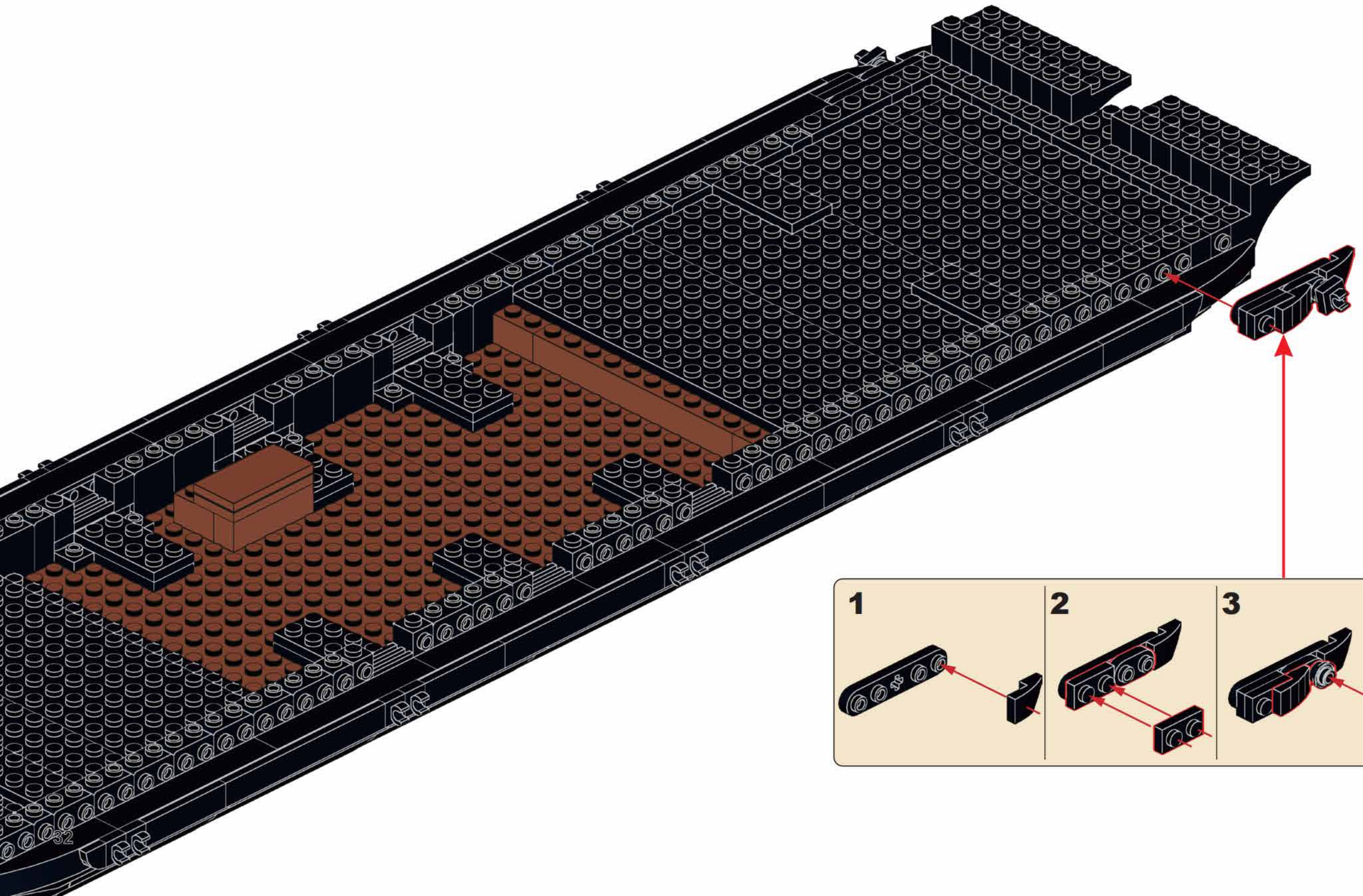

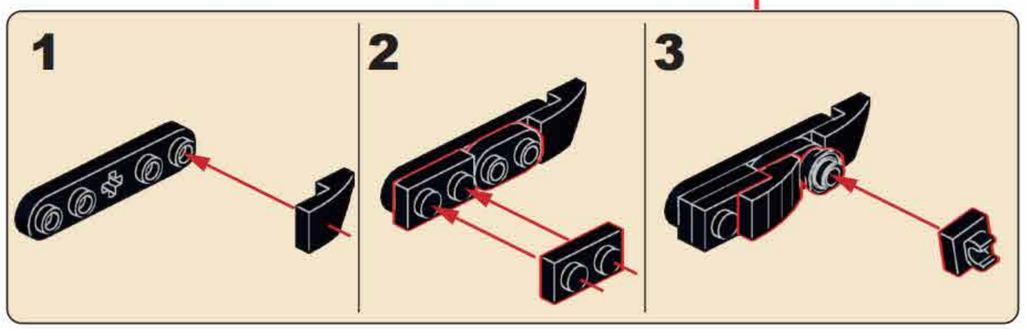

B18

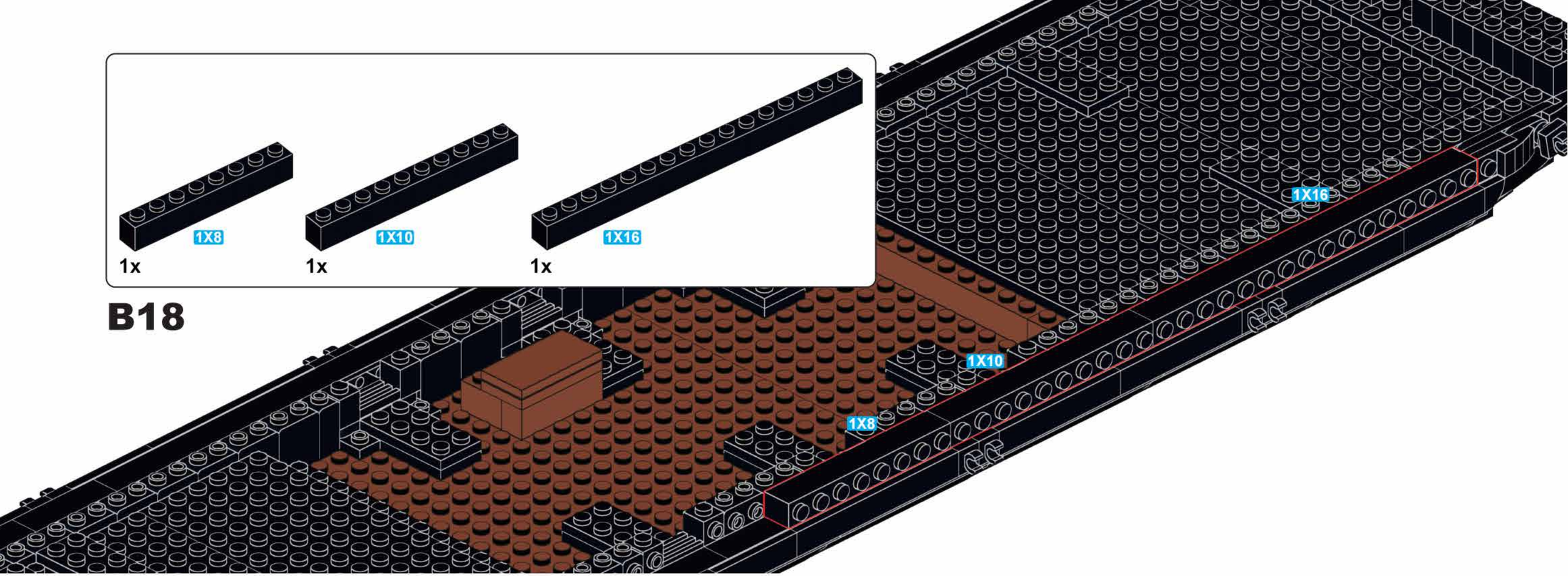

B19

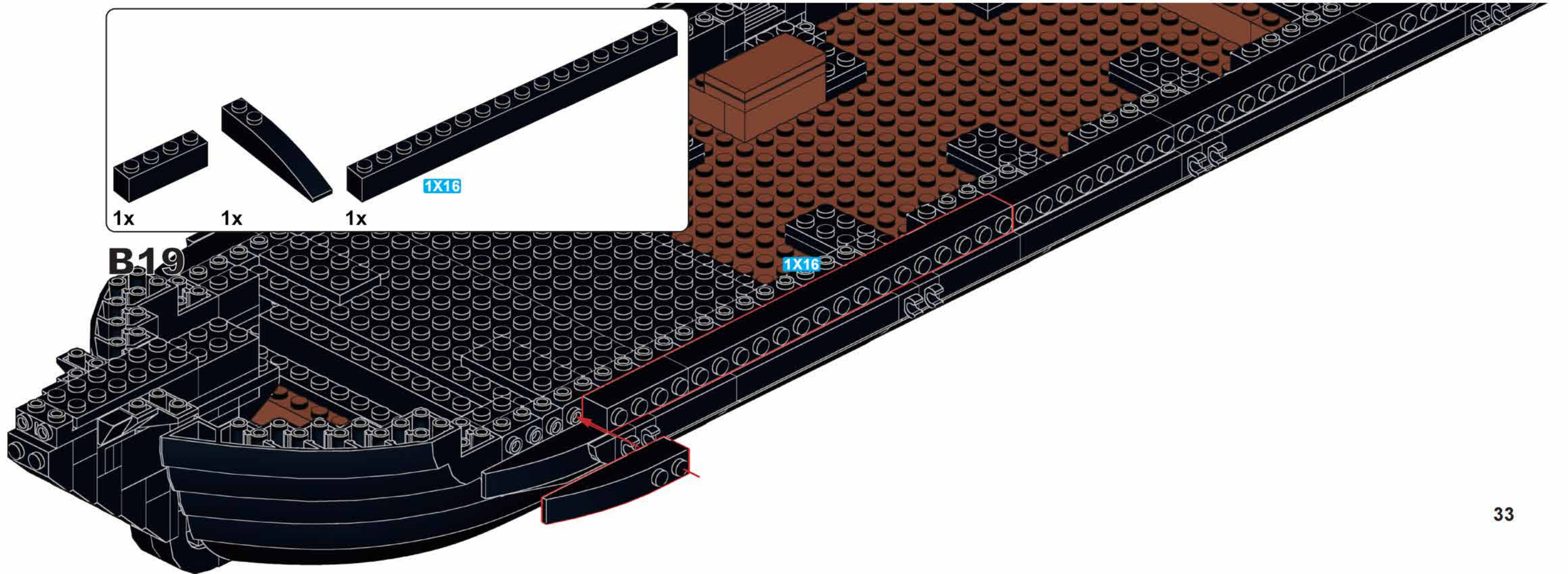

8x

B20

1x 1x 3x 1X4 3x 1X6 2x 1X8

B21

1X6
1X4
1X6
1X6
1X8
1X4
1X8
1X4

B22

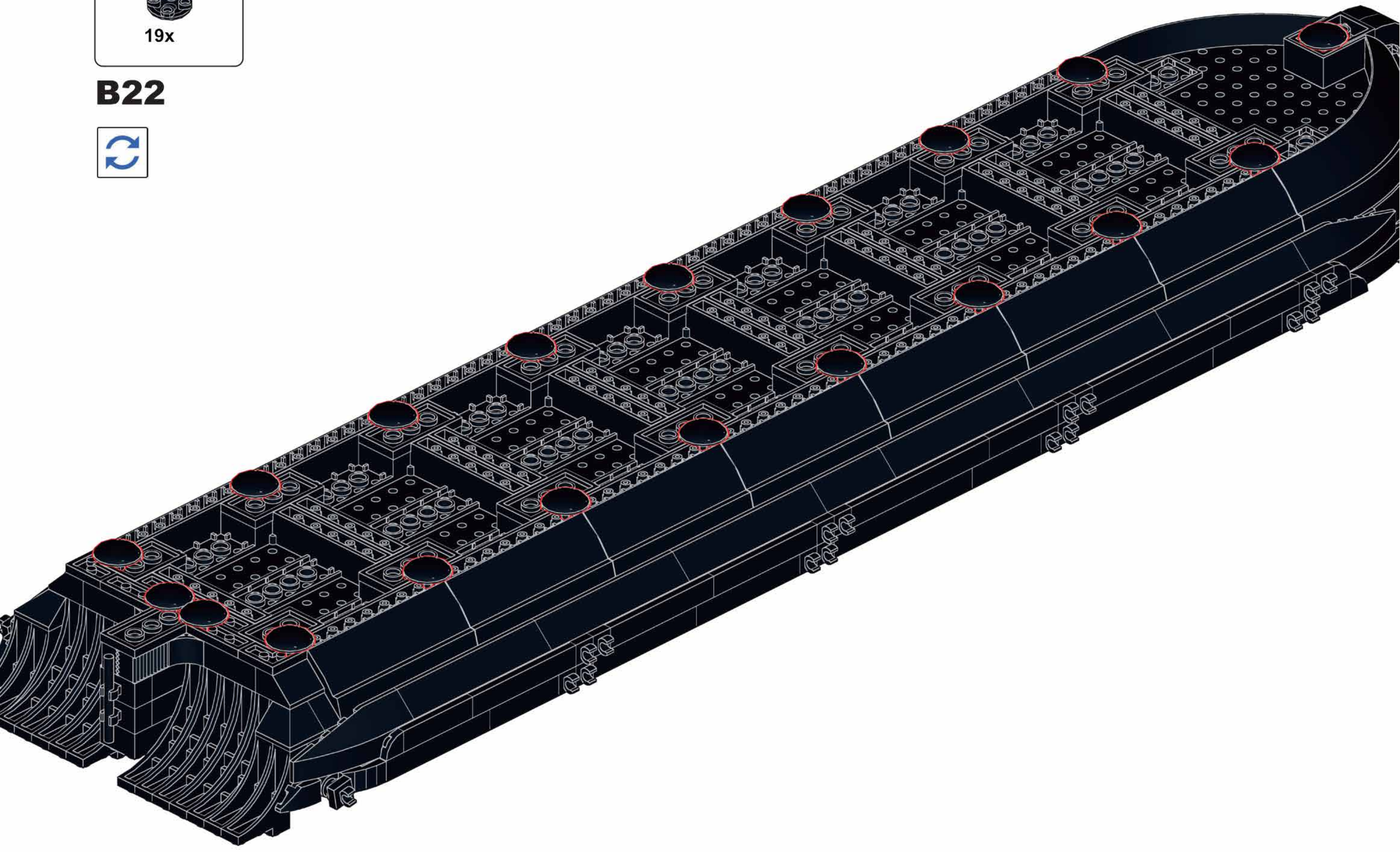

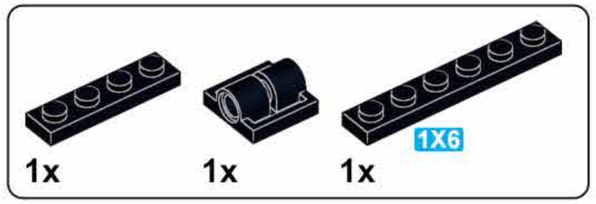

B23

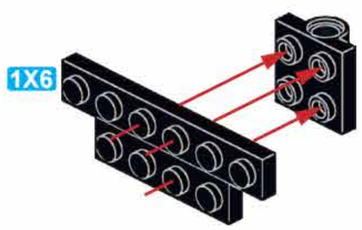

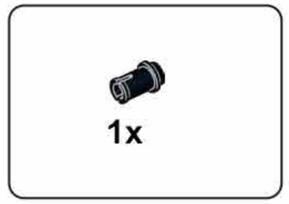

B24

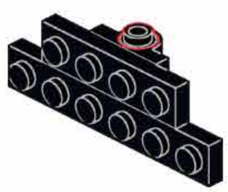

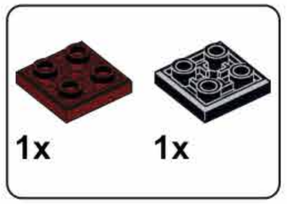

B25

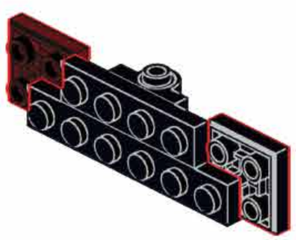

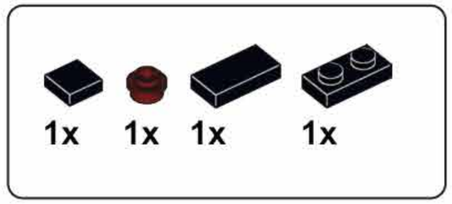

B26

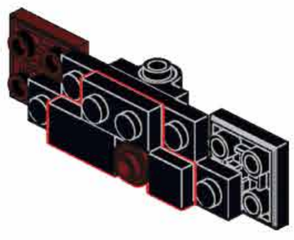

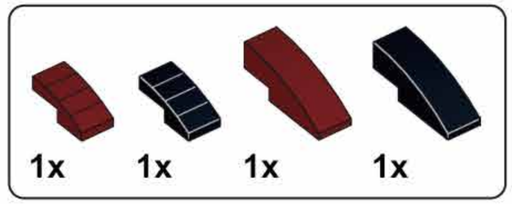

B27

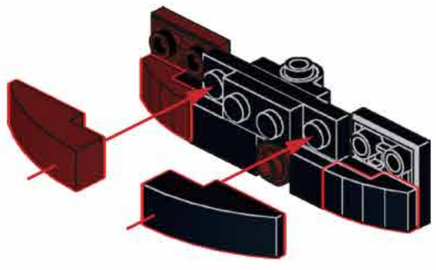

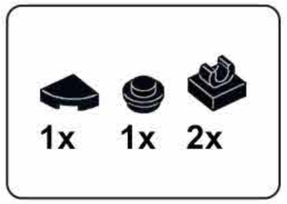

B28

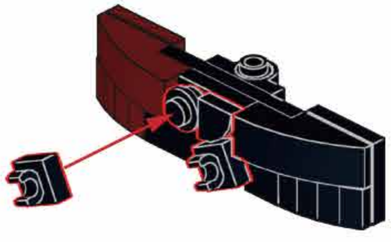

B29

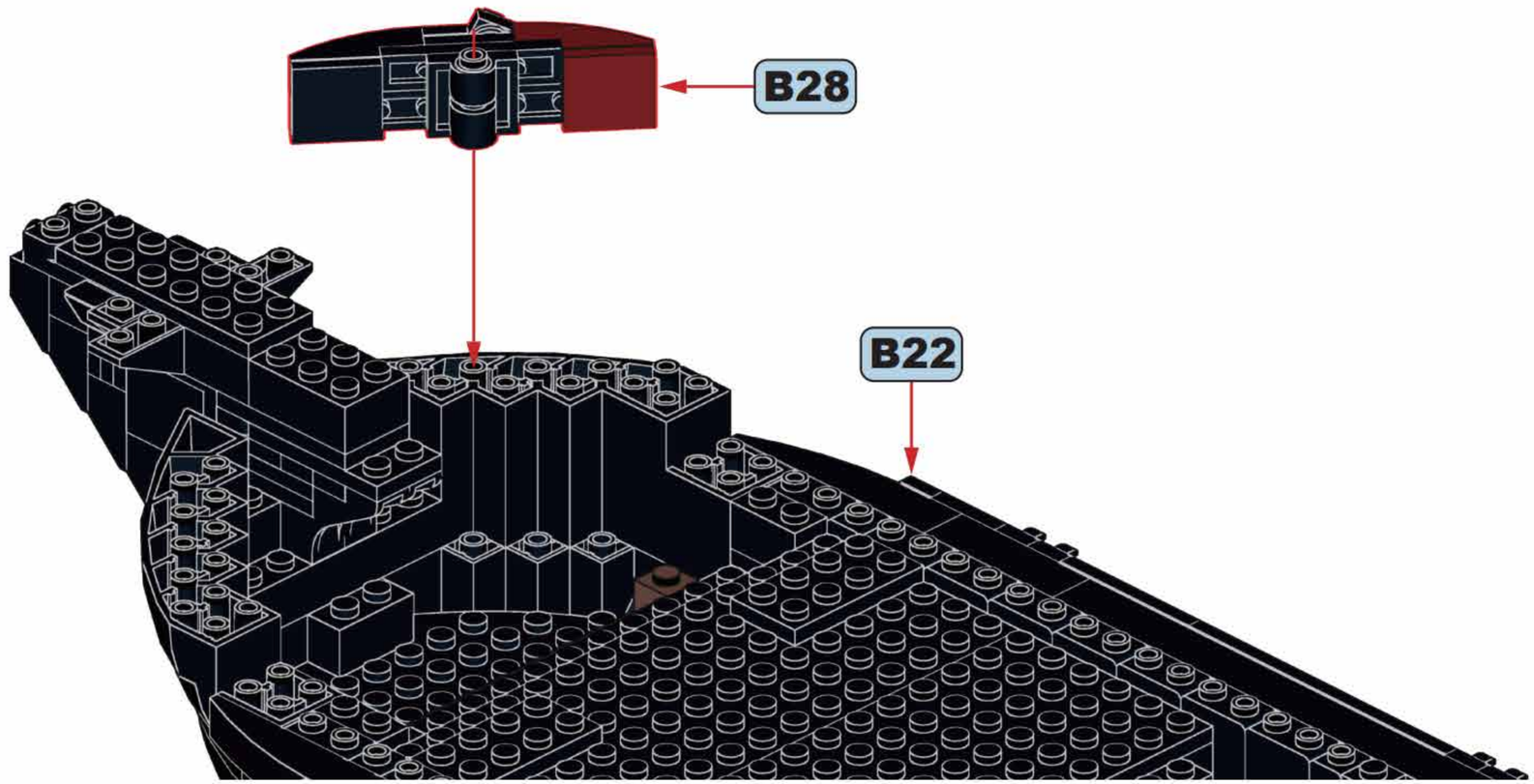

1x 1x 1x 1X6

B30

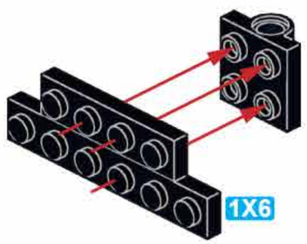

1x

B31

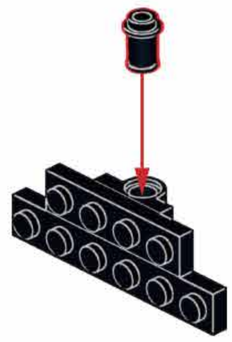

1x 1x

B32

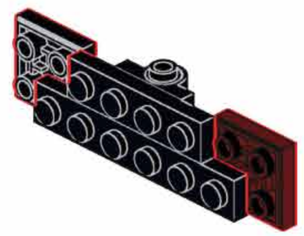

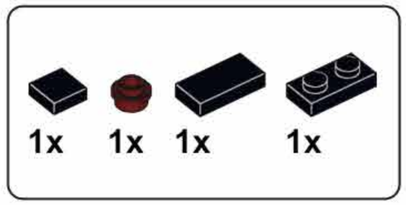

B33

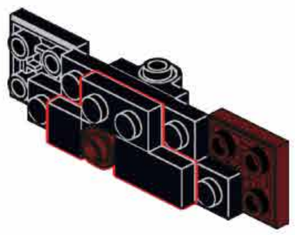

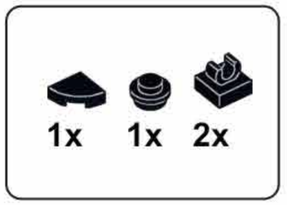

B34

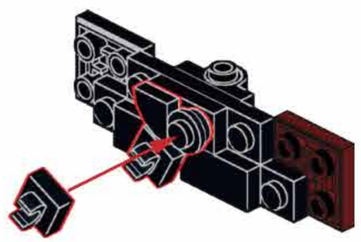

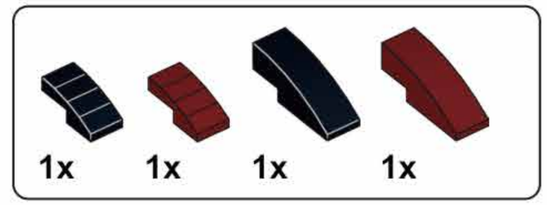

B35

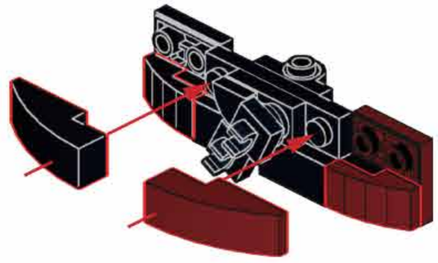

B36

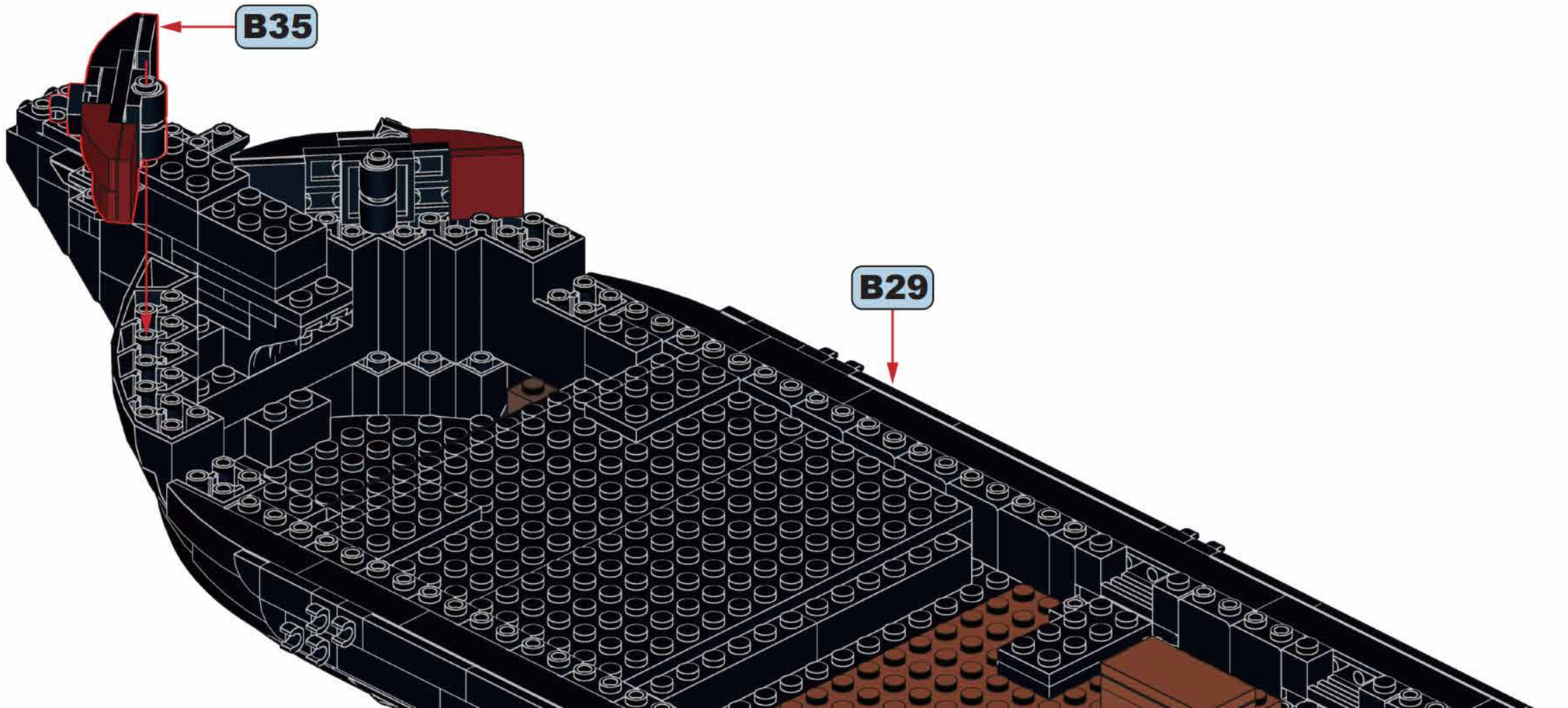

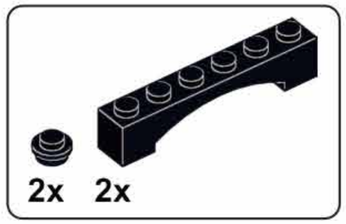

B37

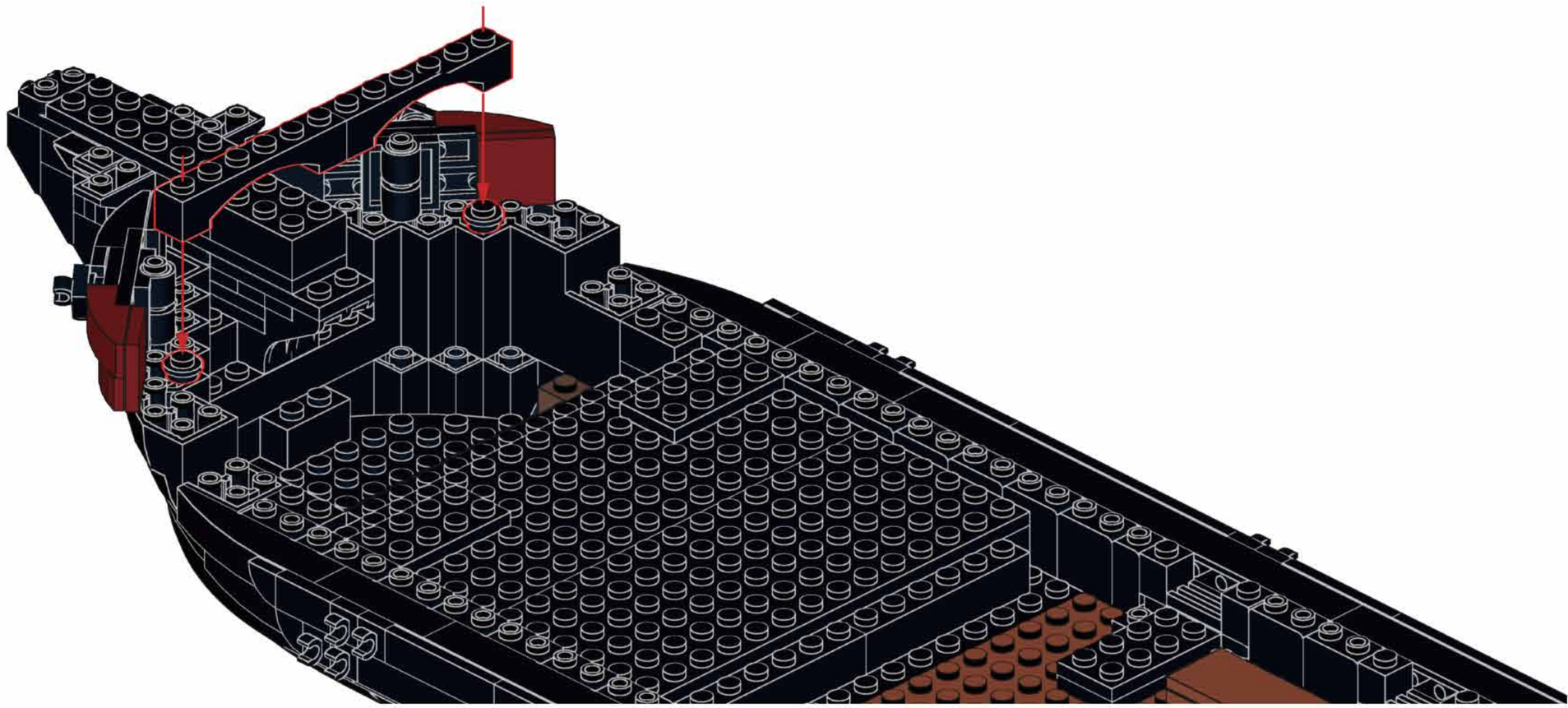

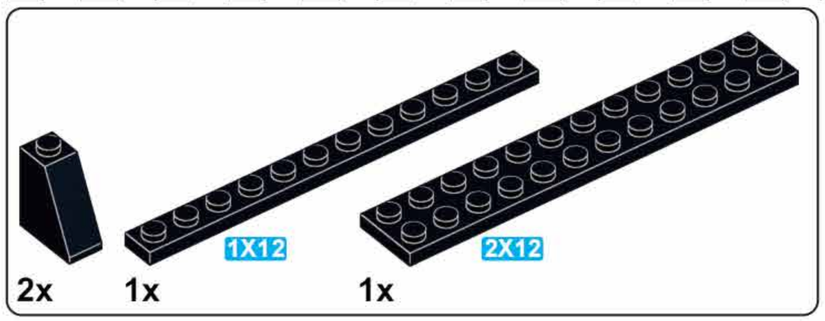

B38

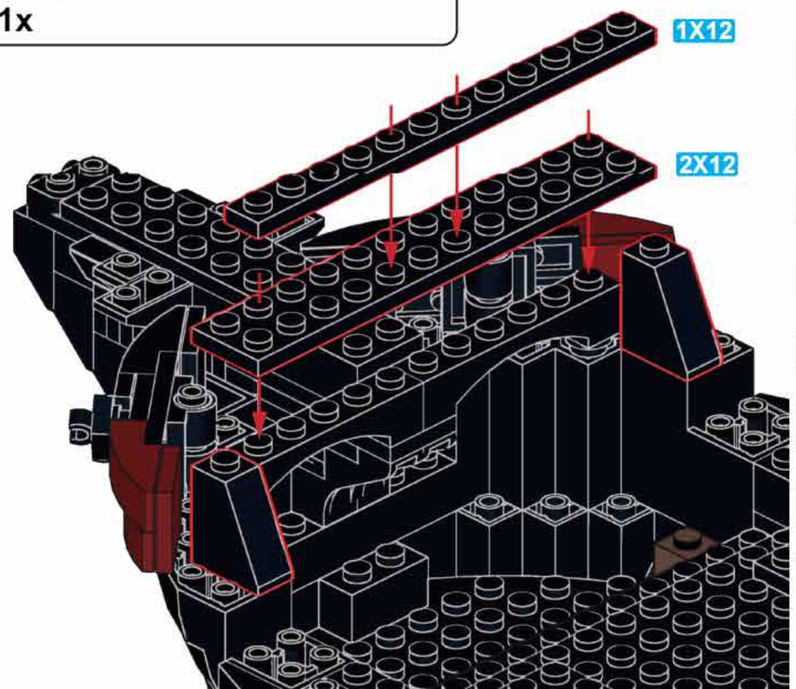

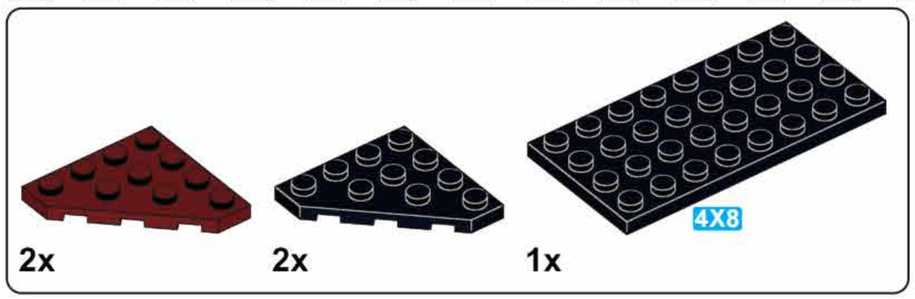

B39

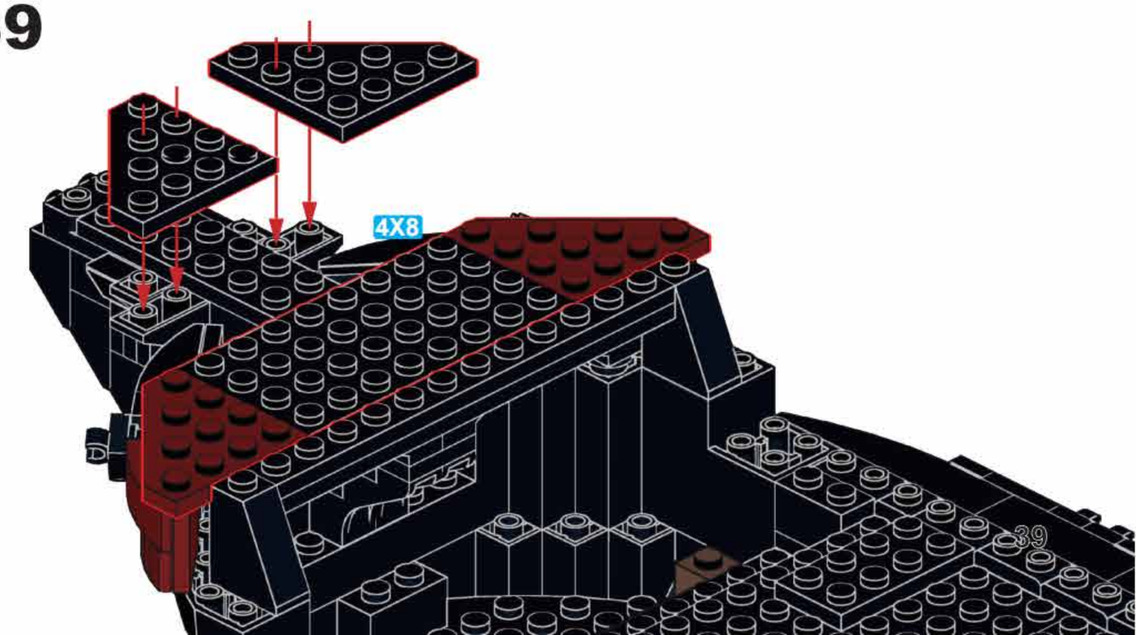

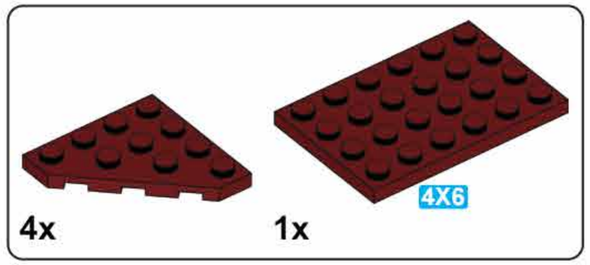

B40

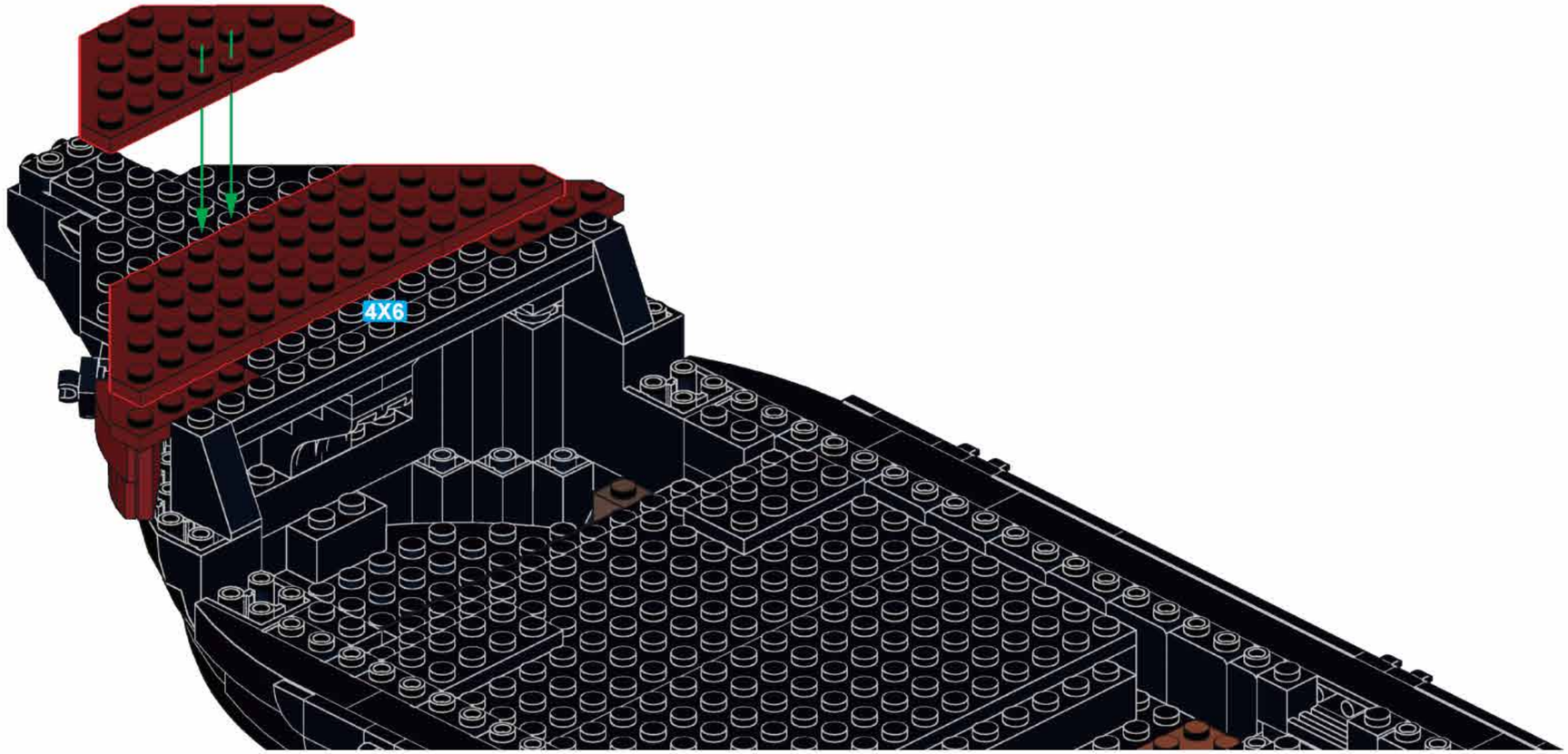

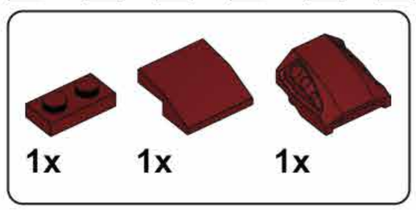

B41

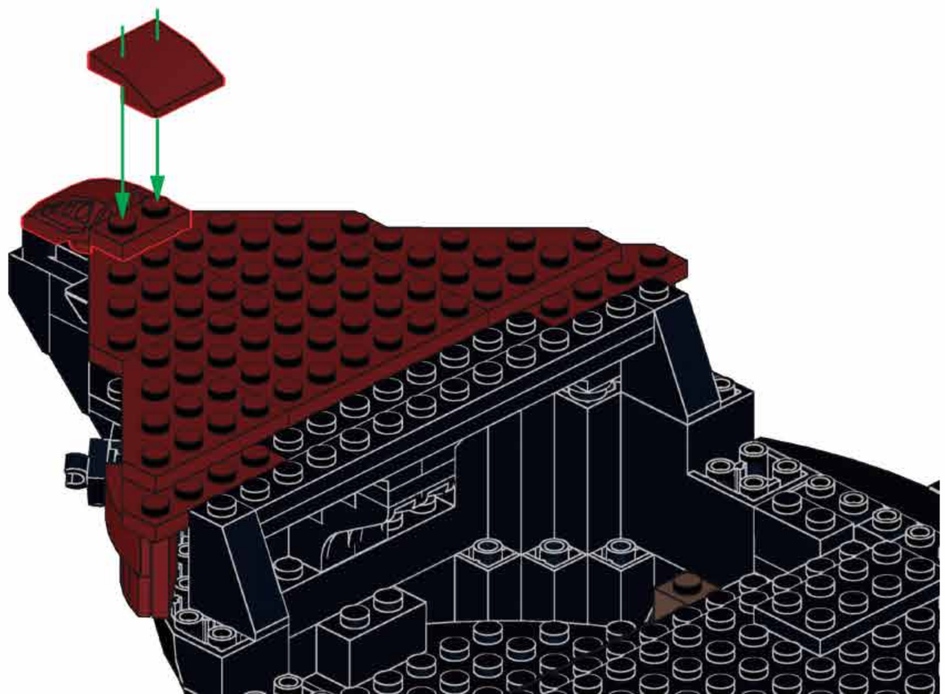

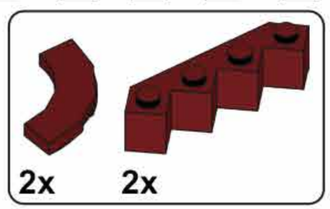

B42

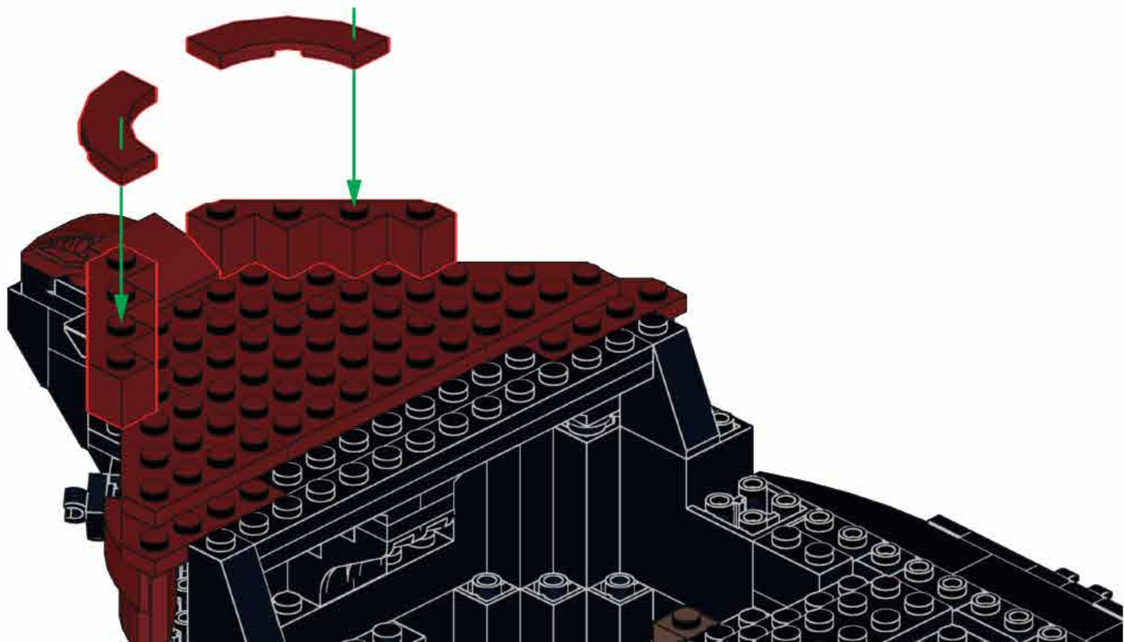

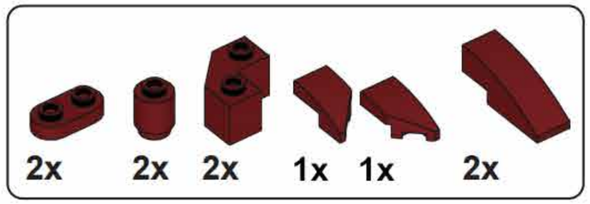

B43

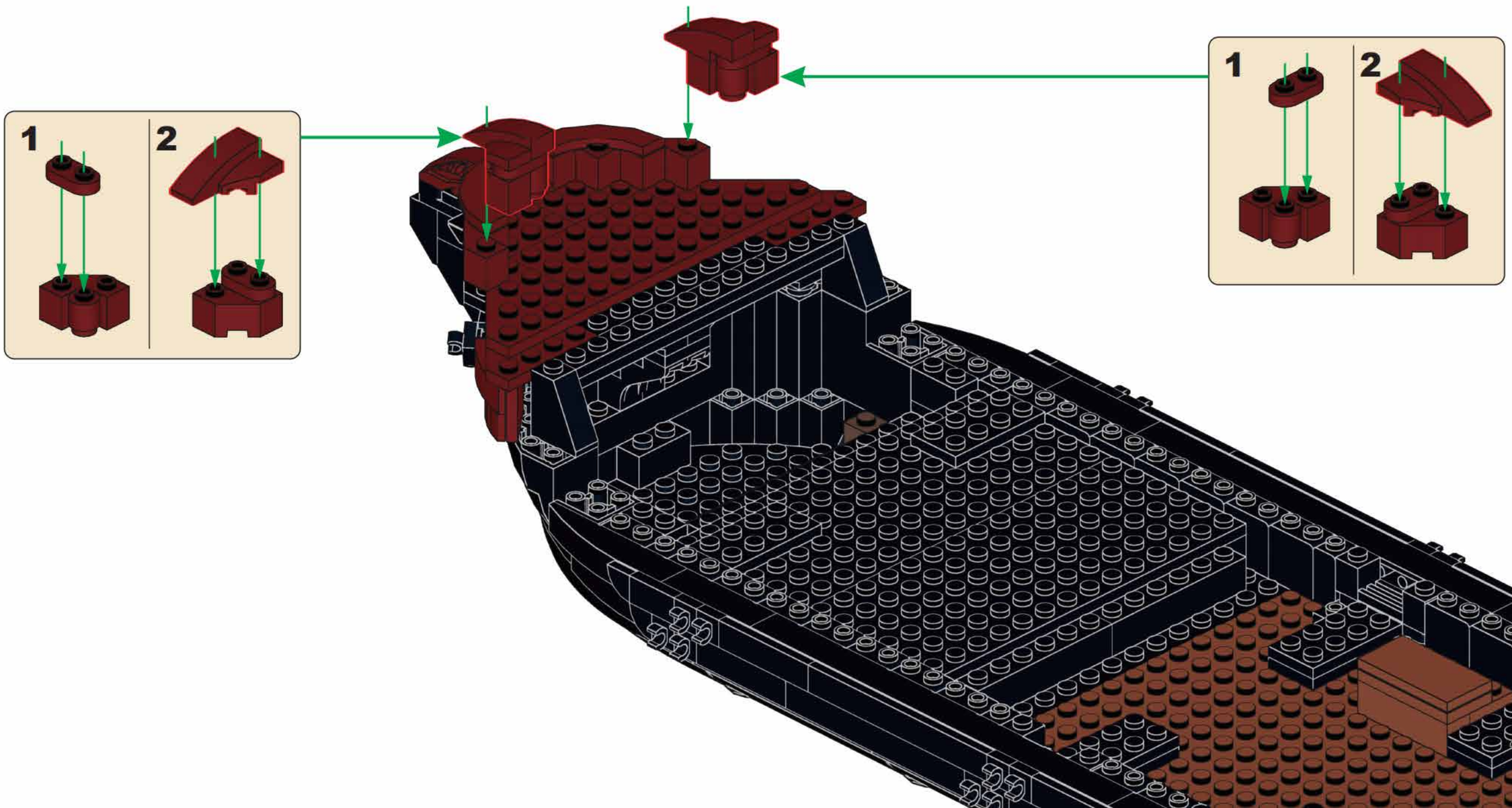

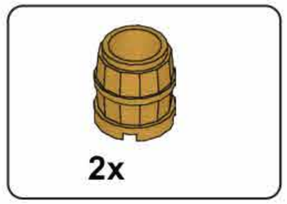

B44

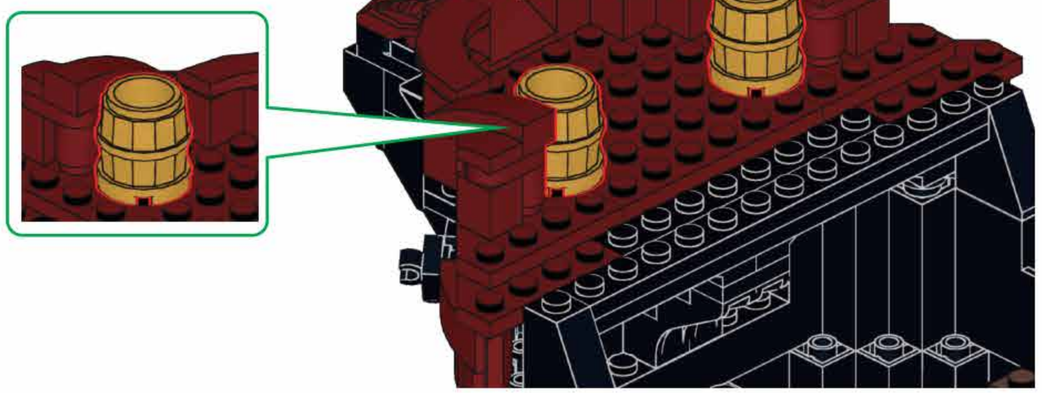

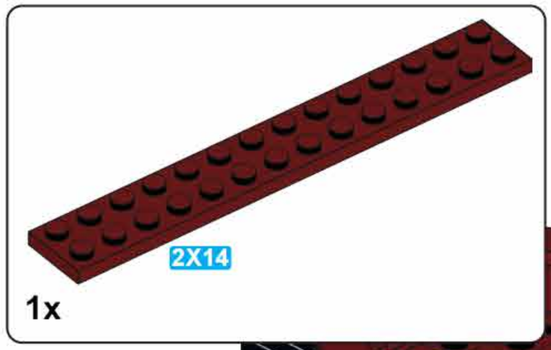

B45

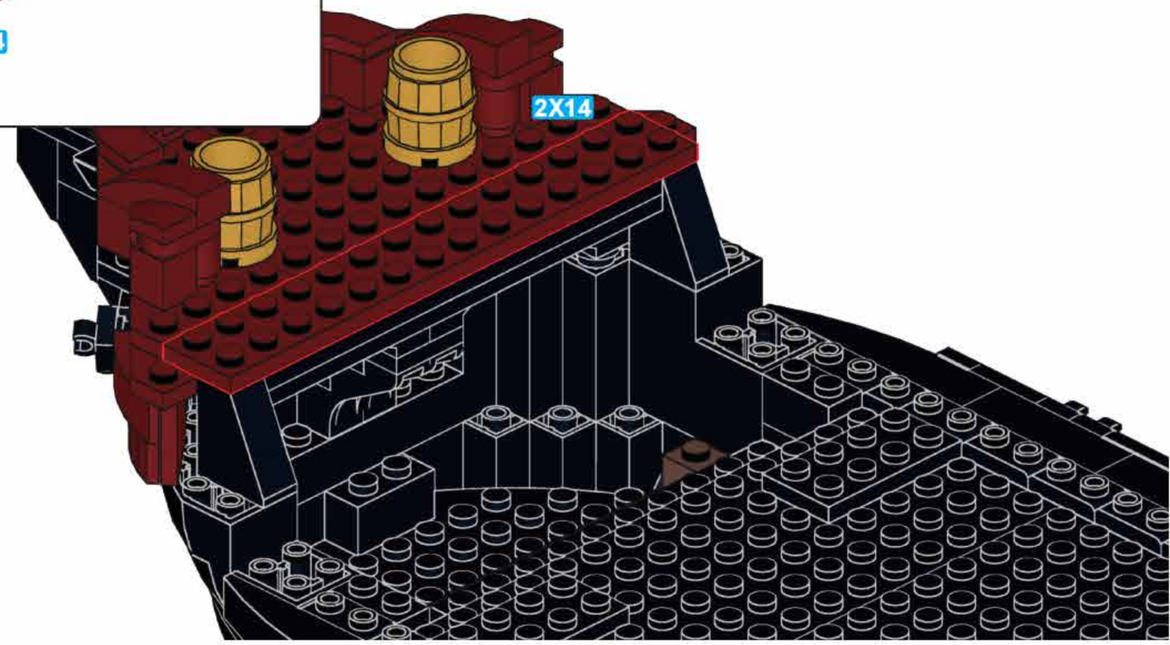

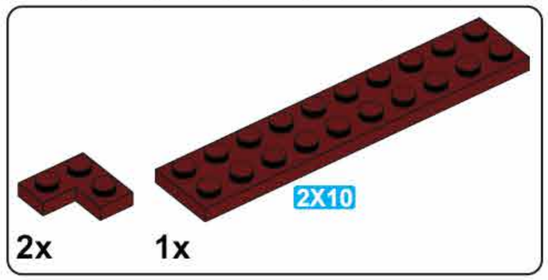

B46

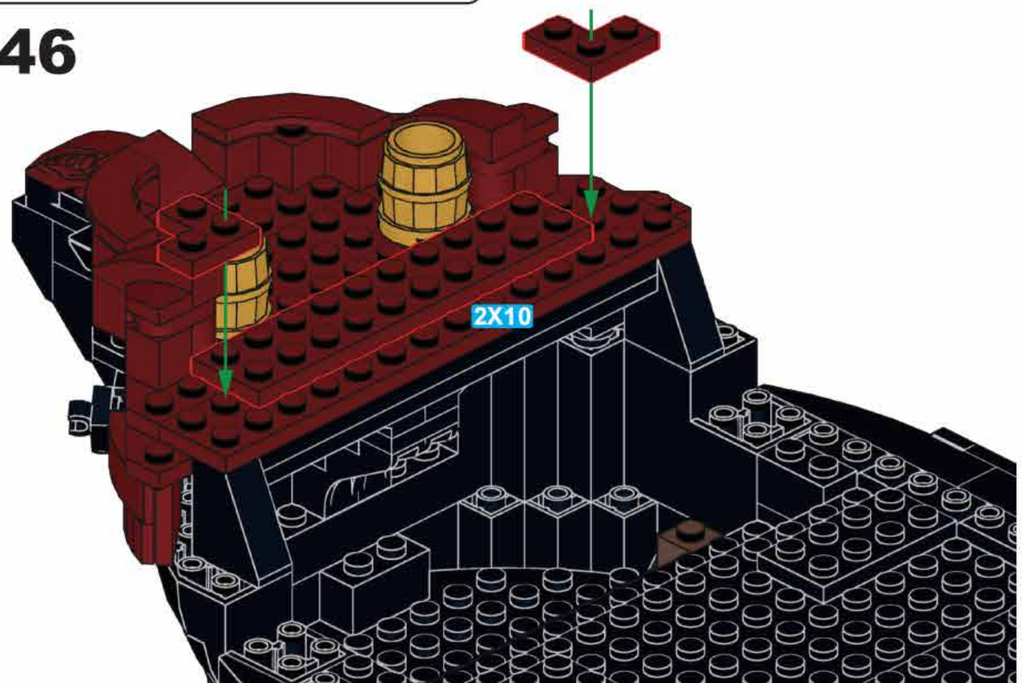

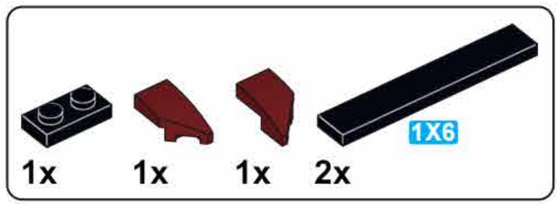

B47

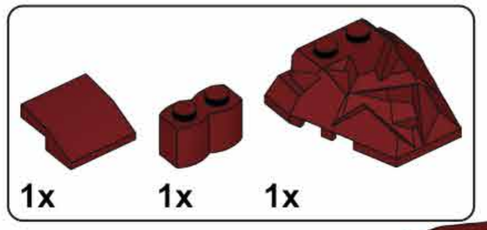

B48

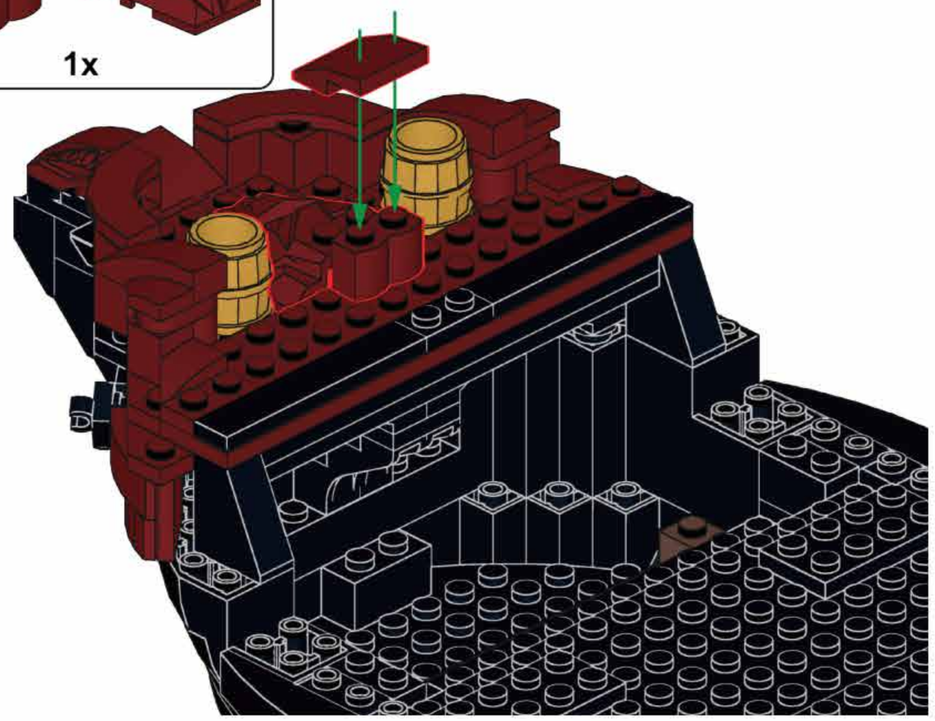

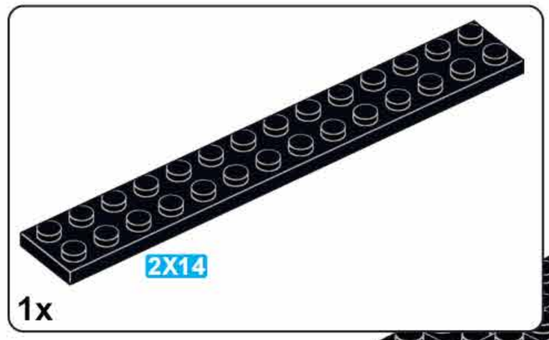

B49

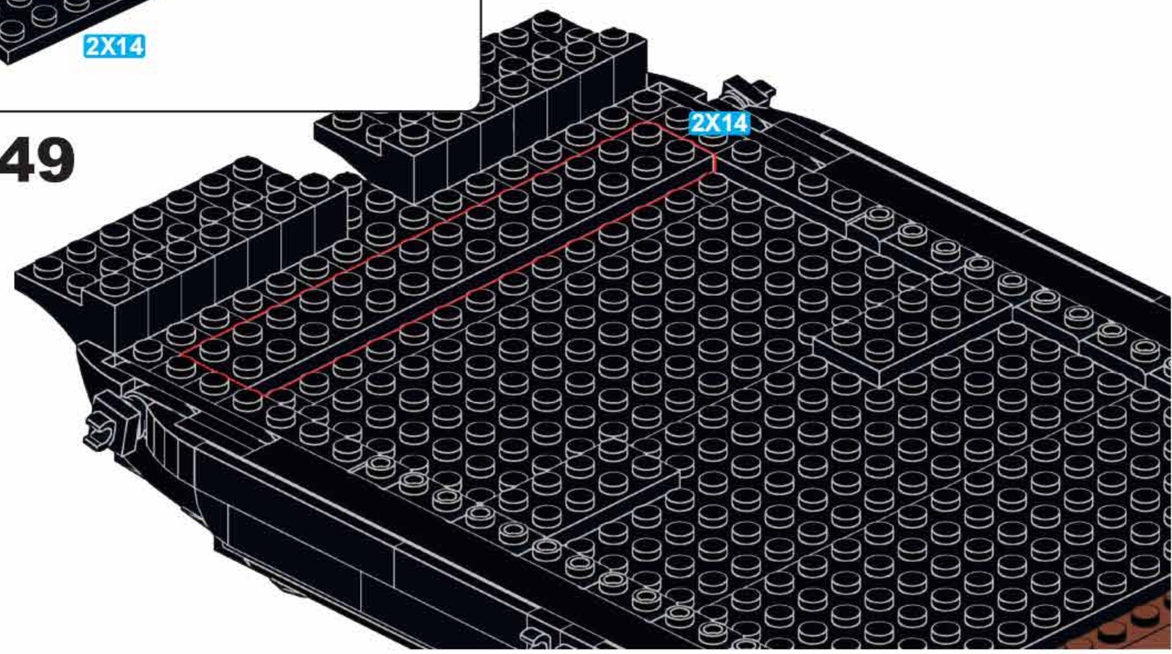

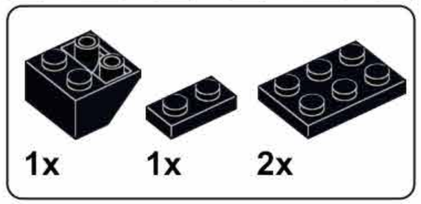

B50

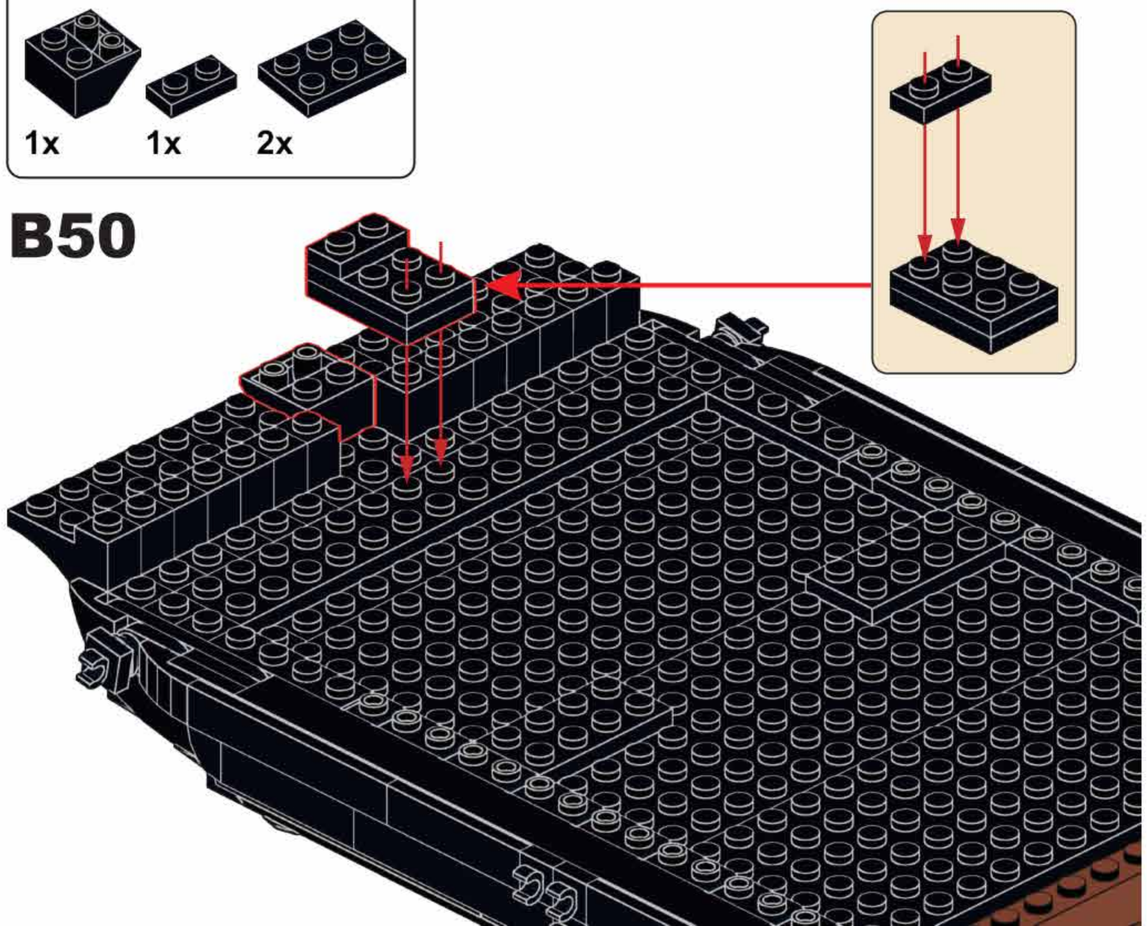

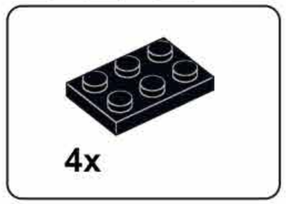

B51

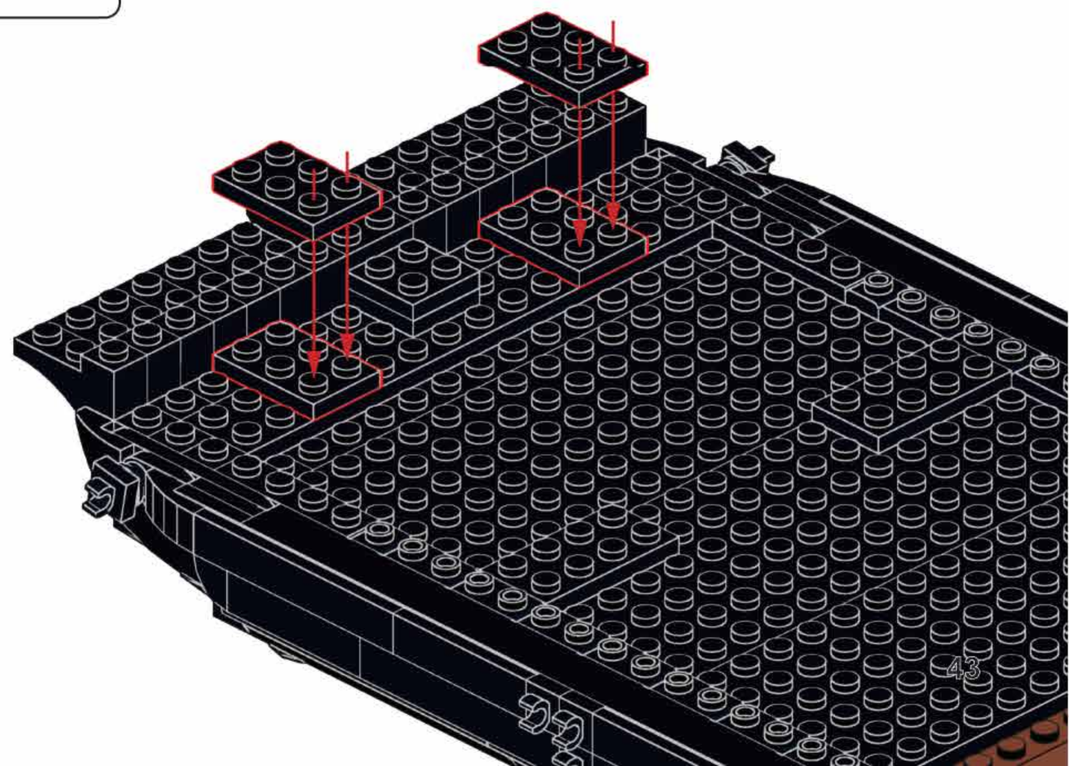

2x 2x

B52

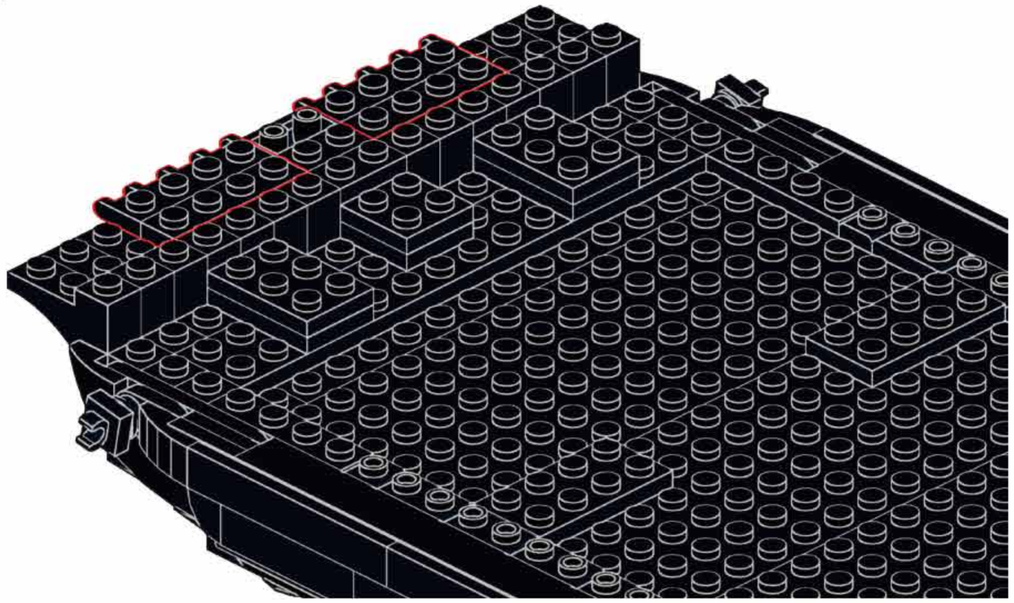

2x

B53

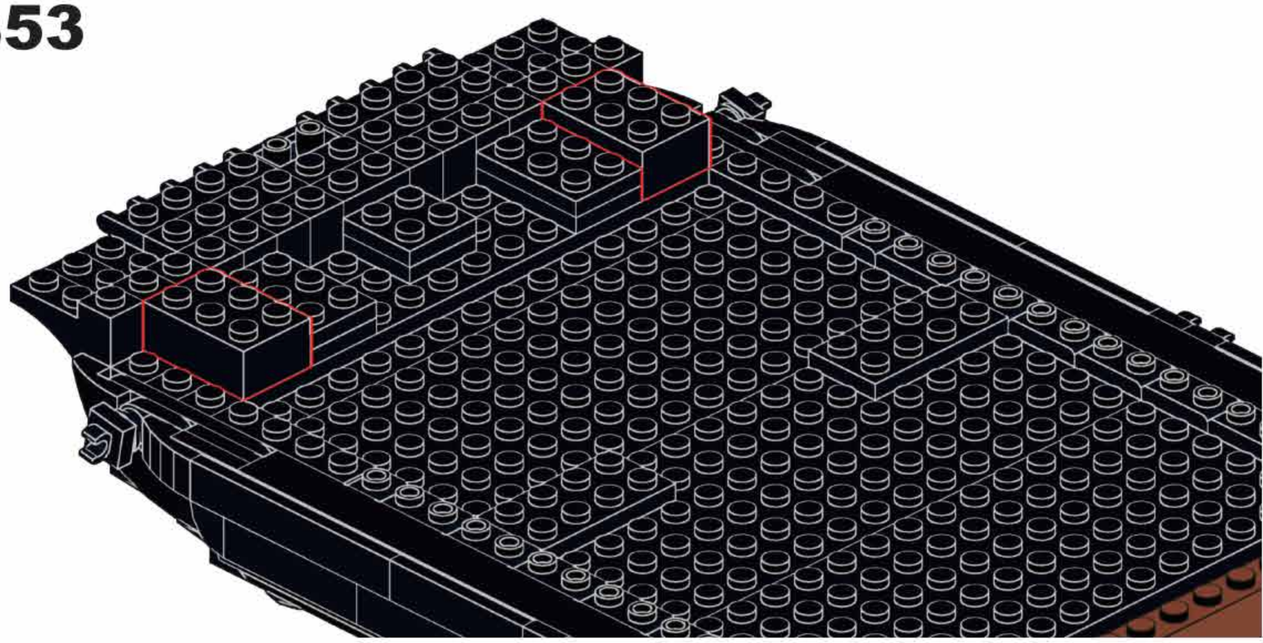

4x

B54

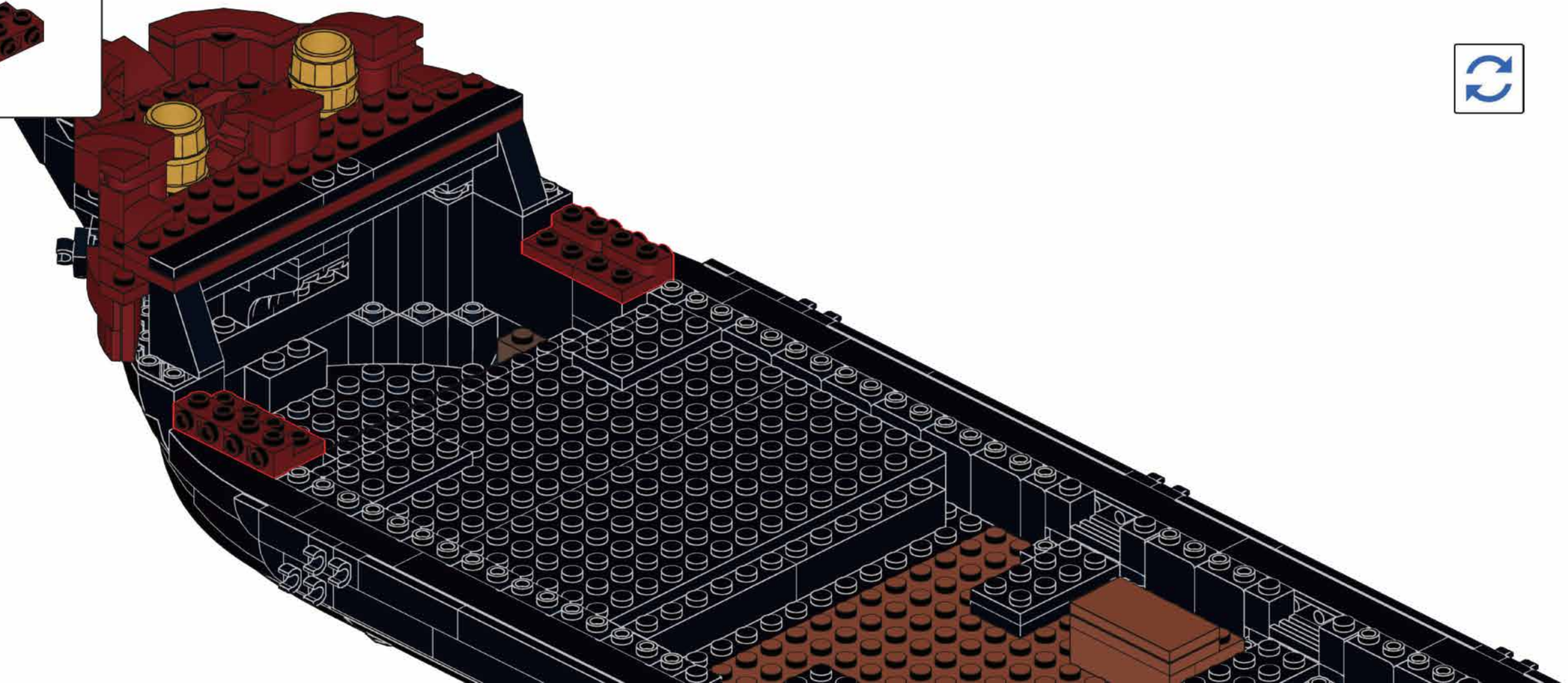

8x

B55

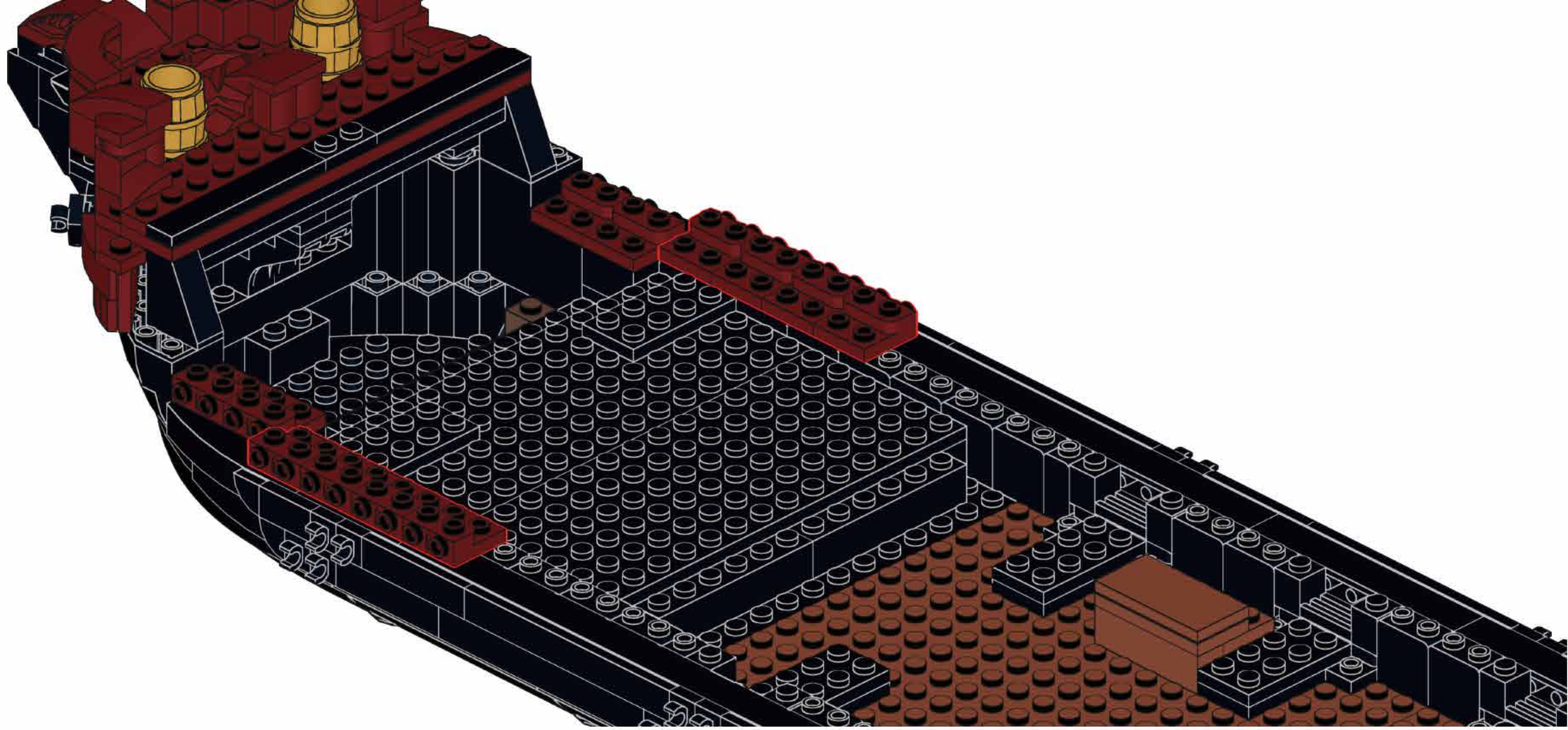

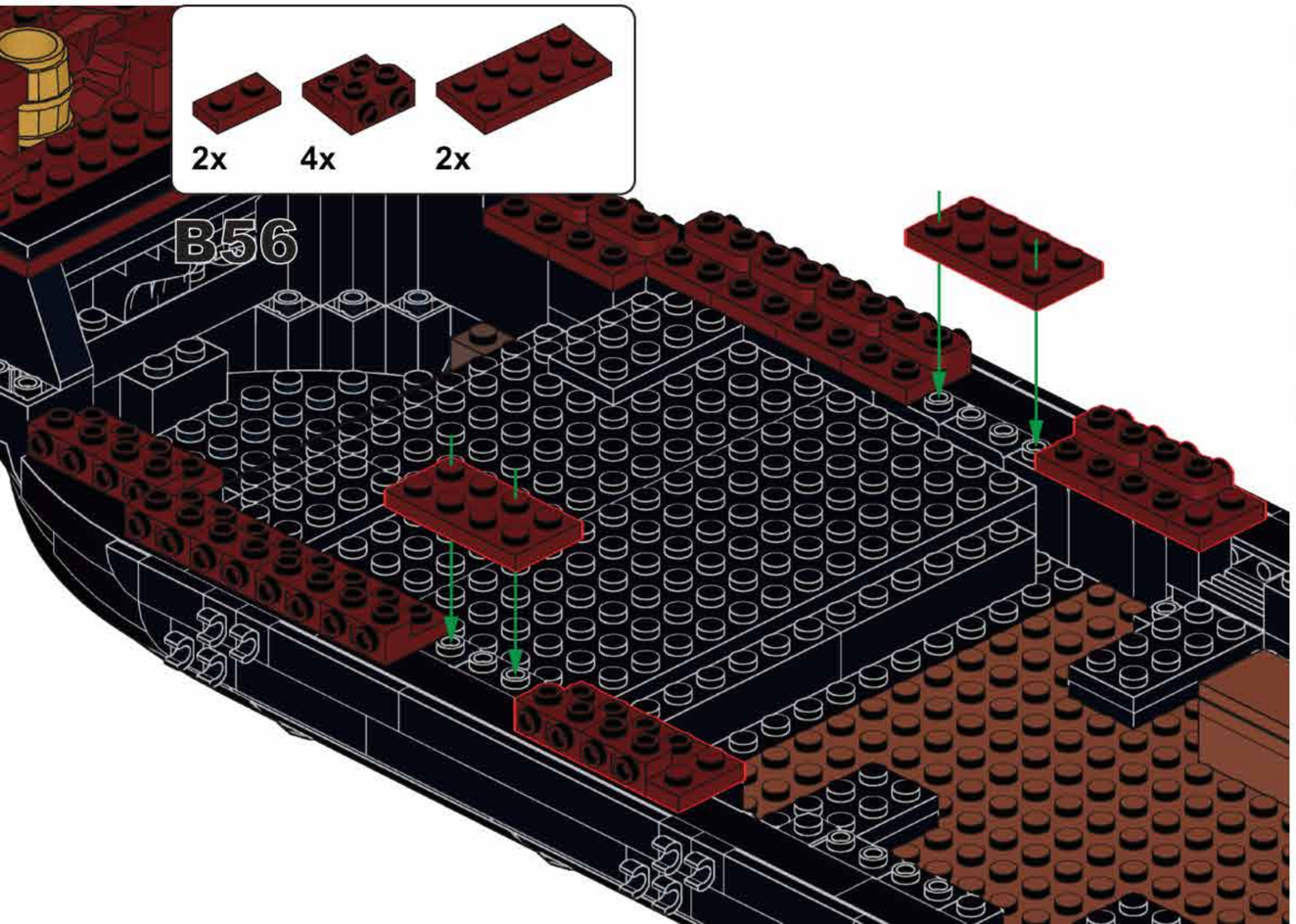

10x

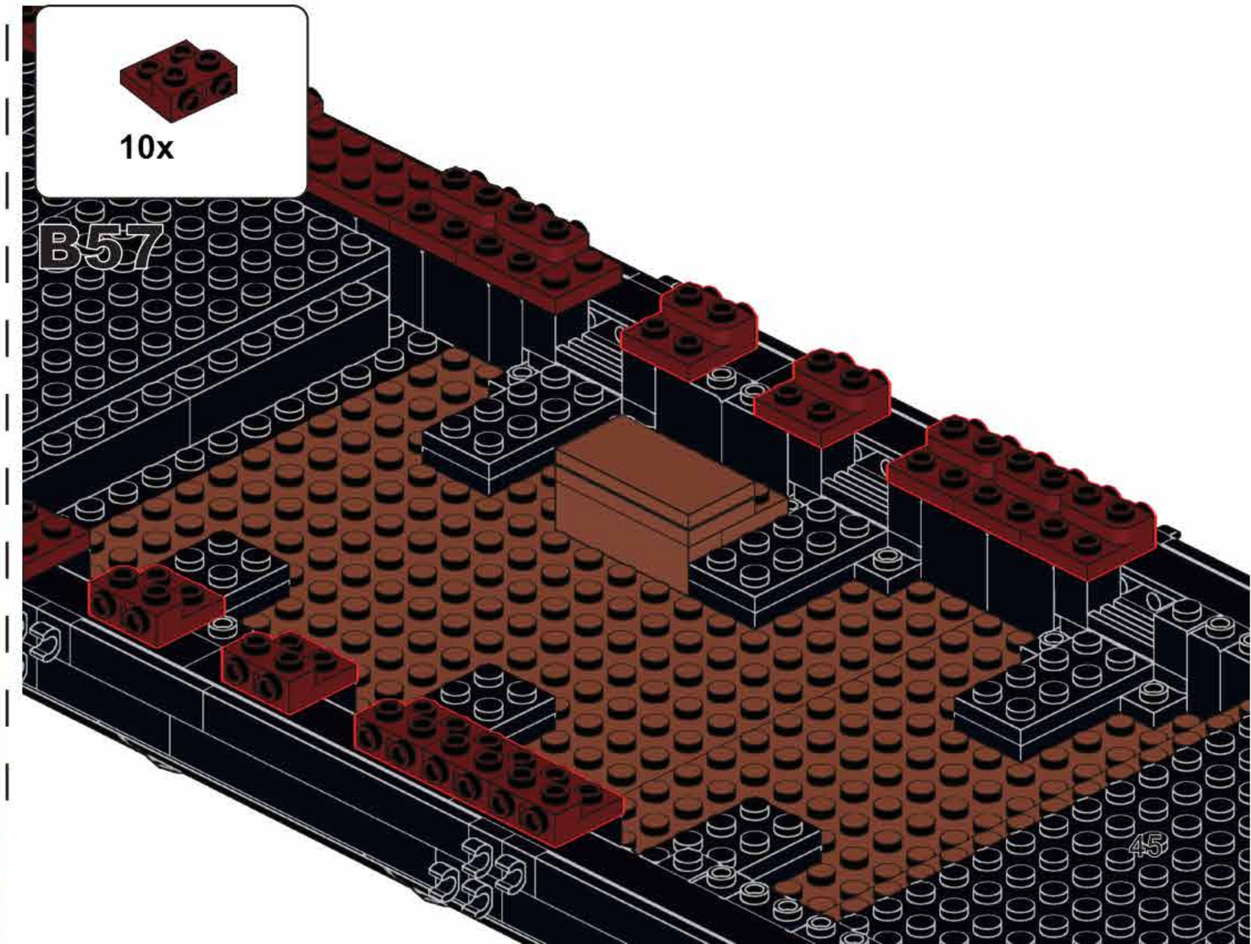

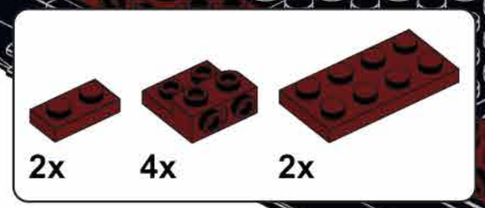

B58

B59

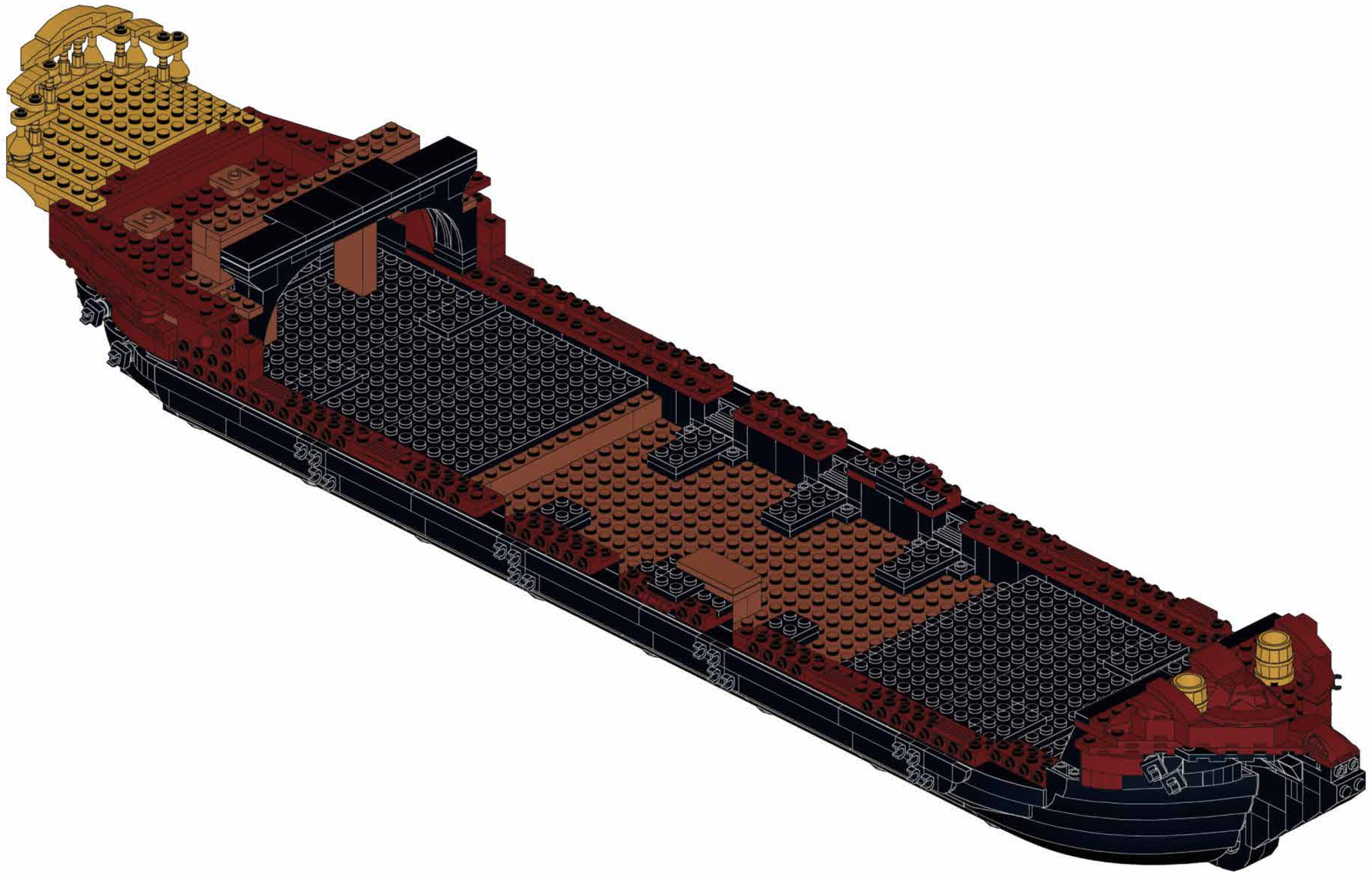

C

2x 4x 2x 1X6

C1

1 2 1X6 x2

12x

C2

8x

C3

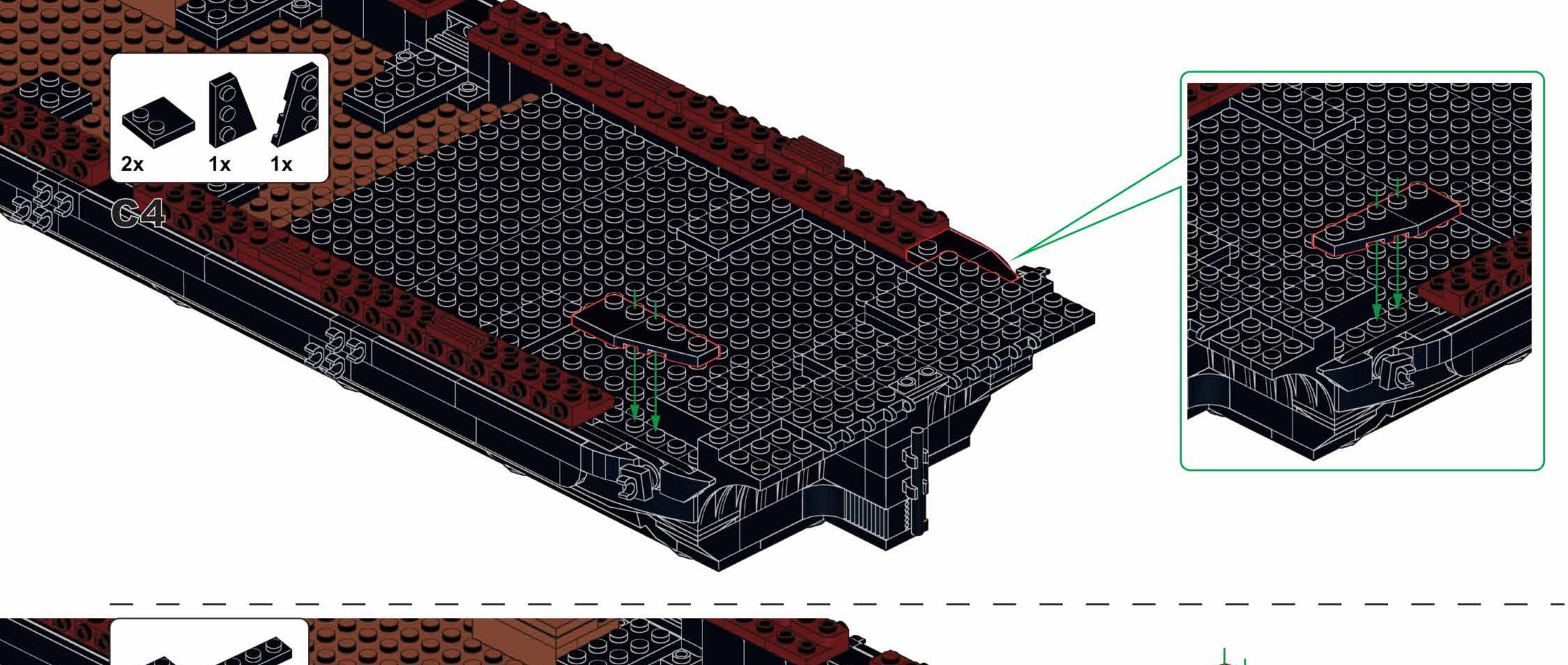
2x
1x
1x
C4

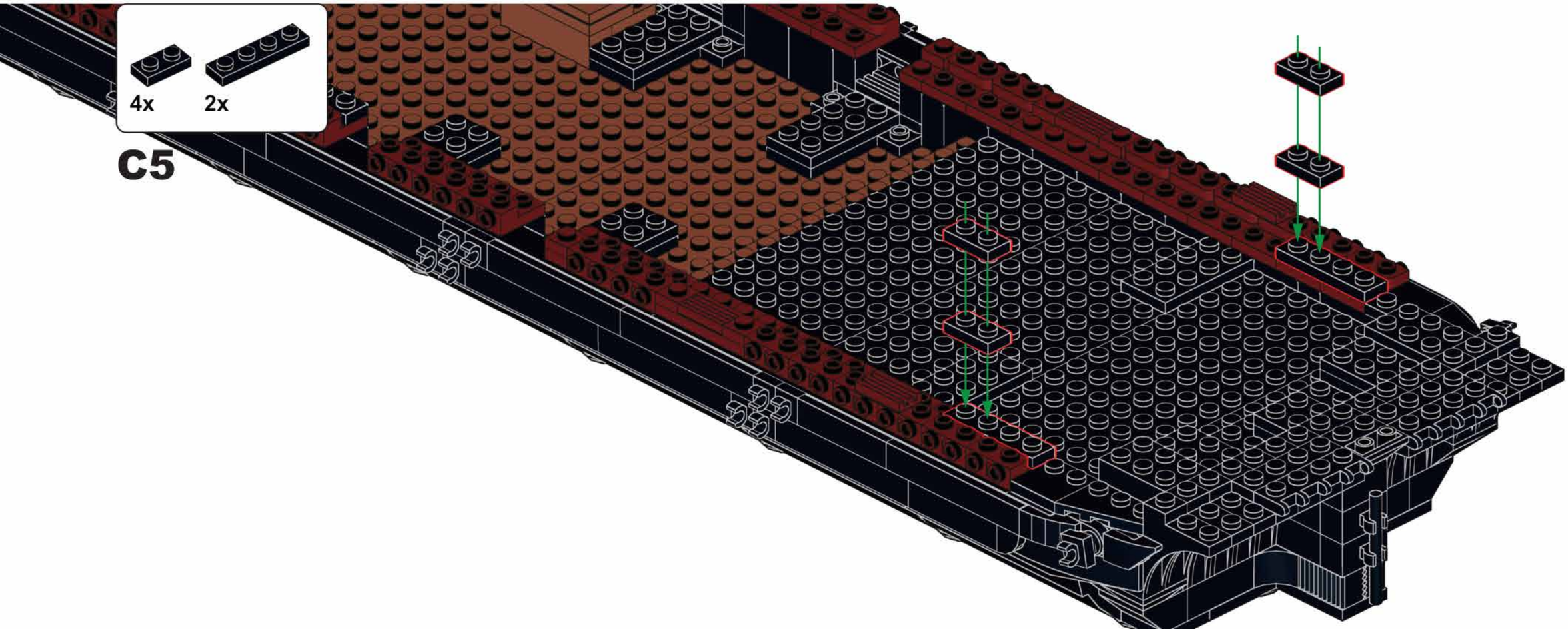
4x
2x
C5

C6

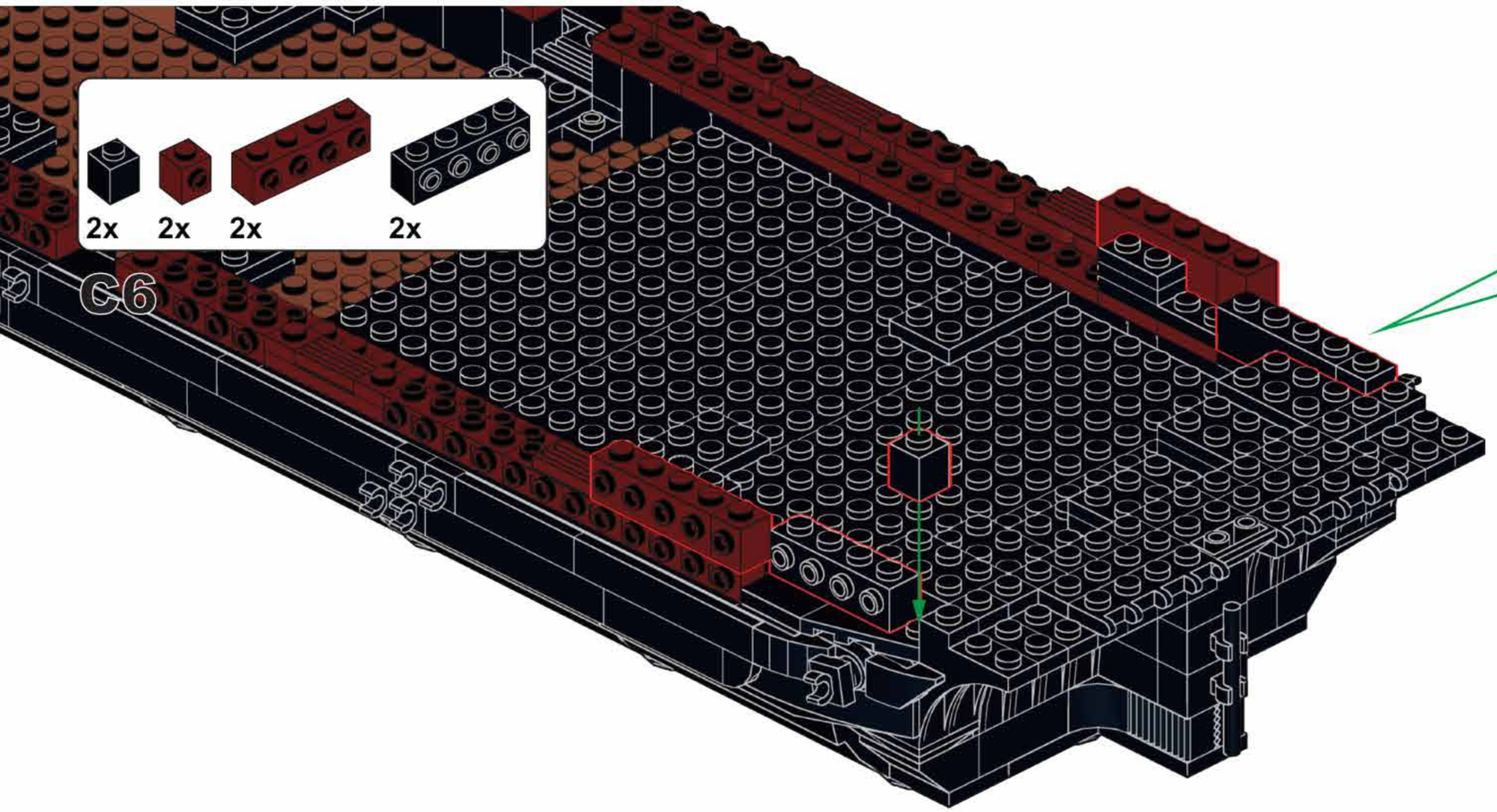

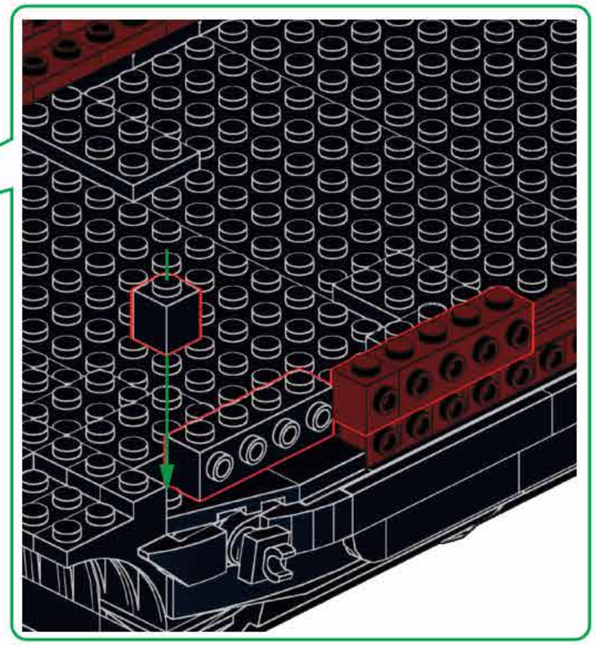

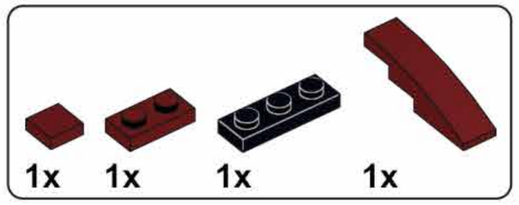

C7

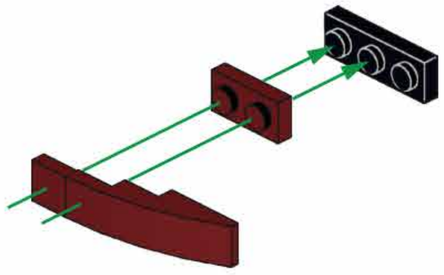

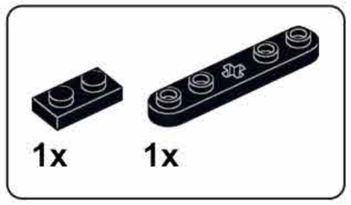

C8

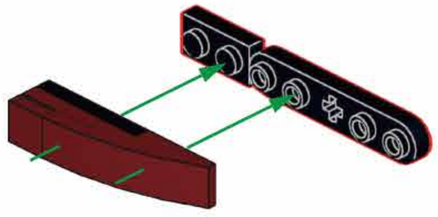

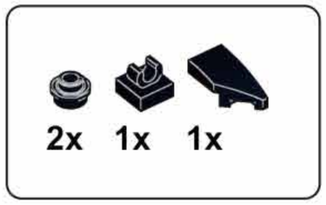

C9

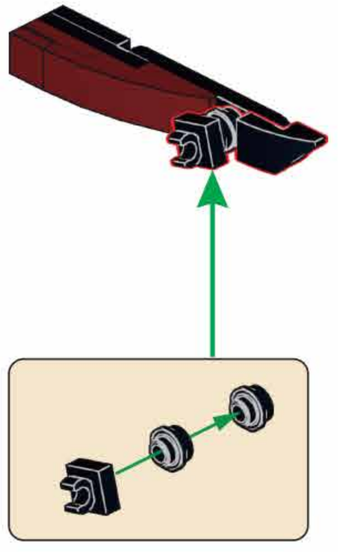

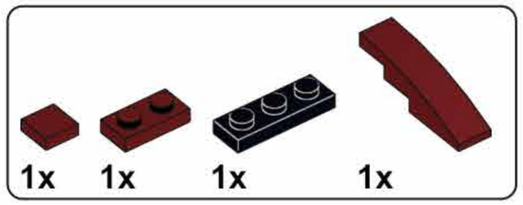

C10

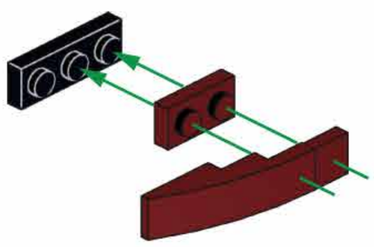

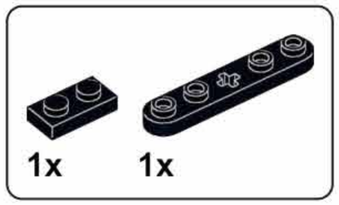

C11

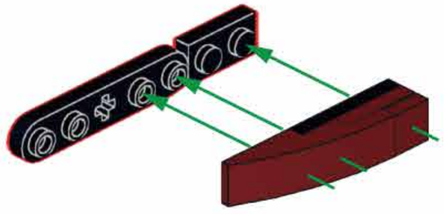

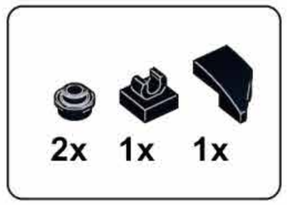

C12

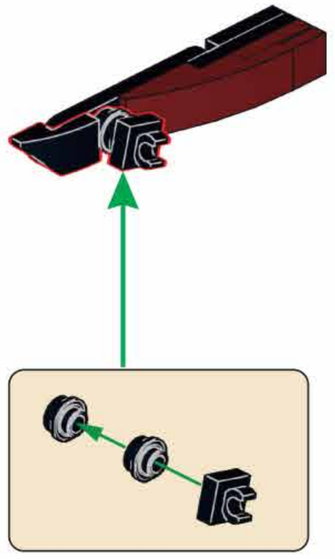

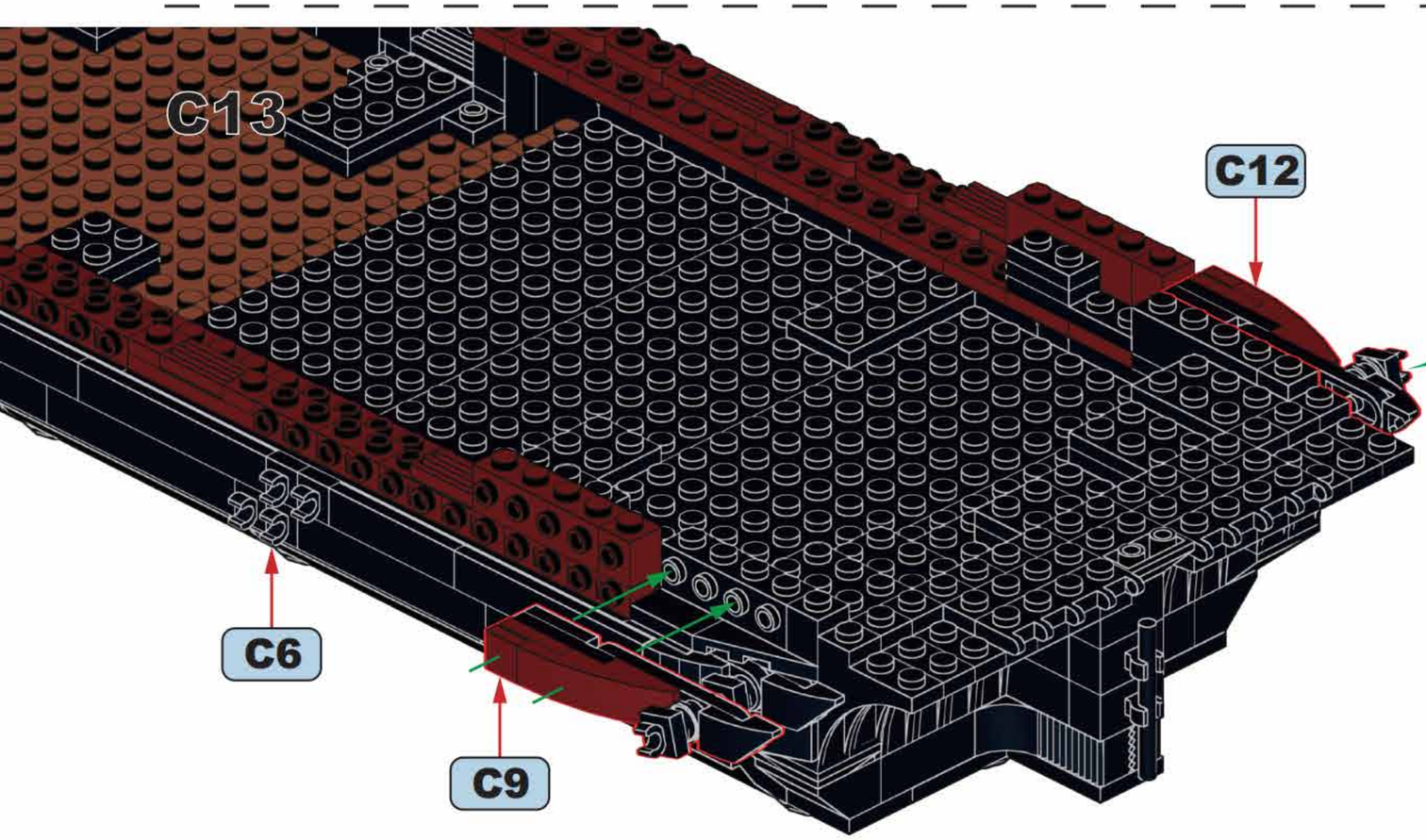

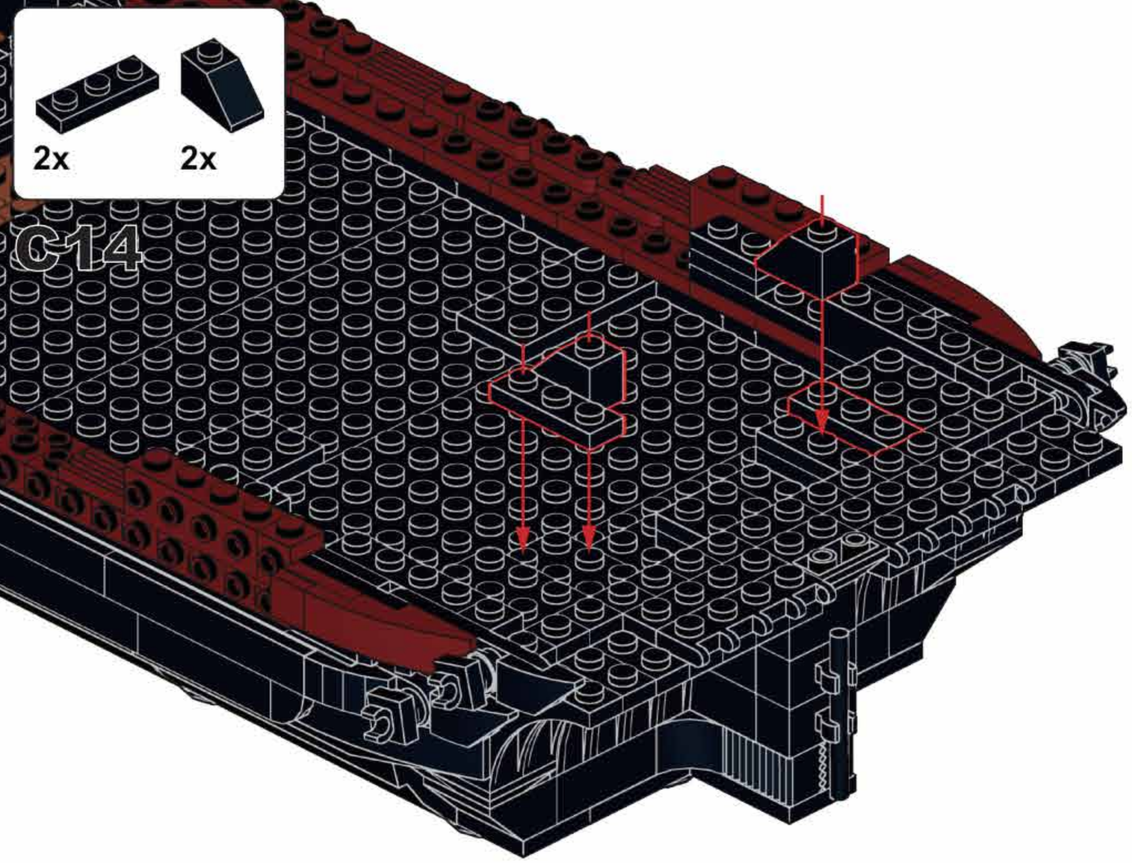
2x
2x
C14

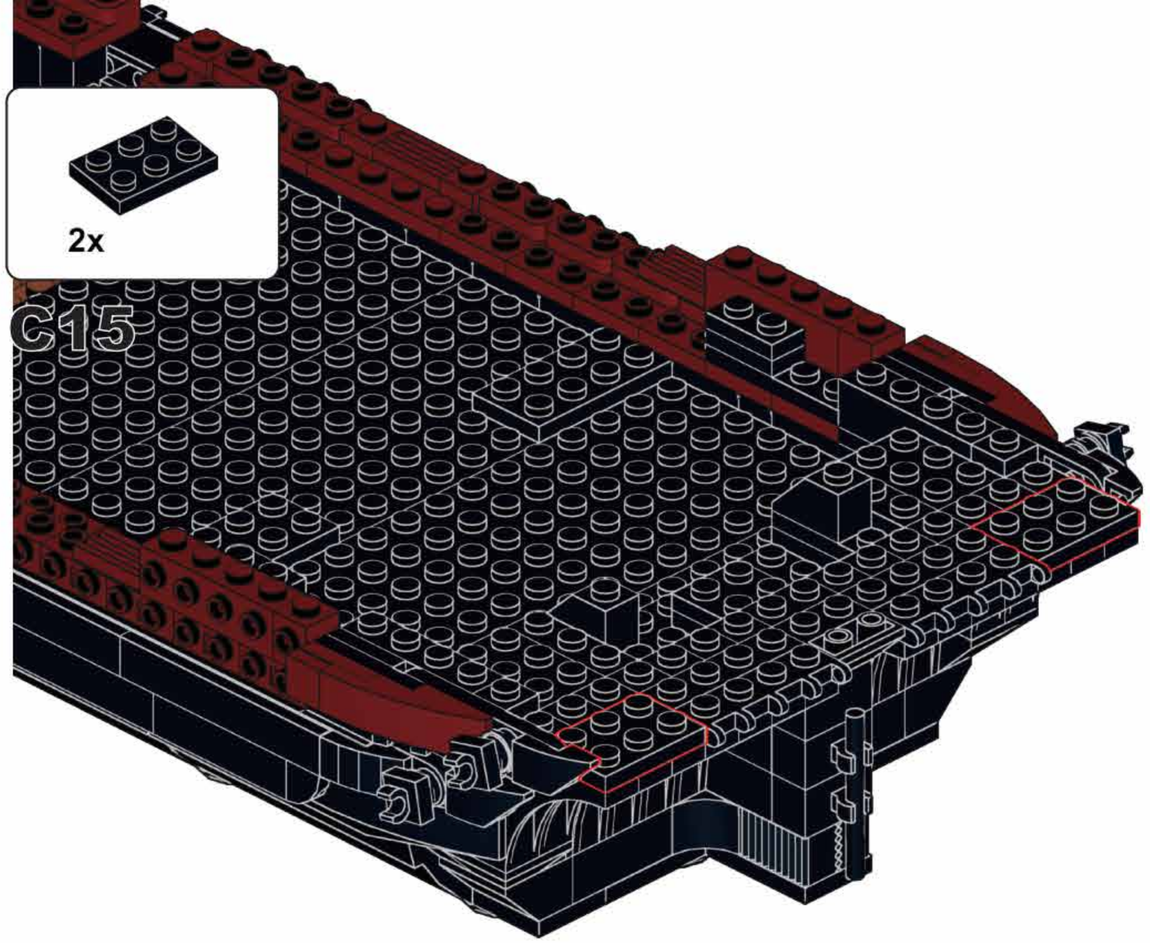
2x
C15

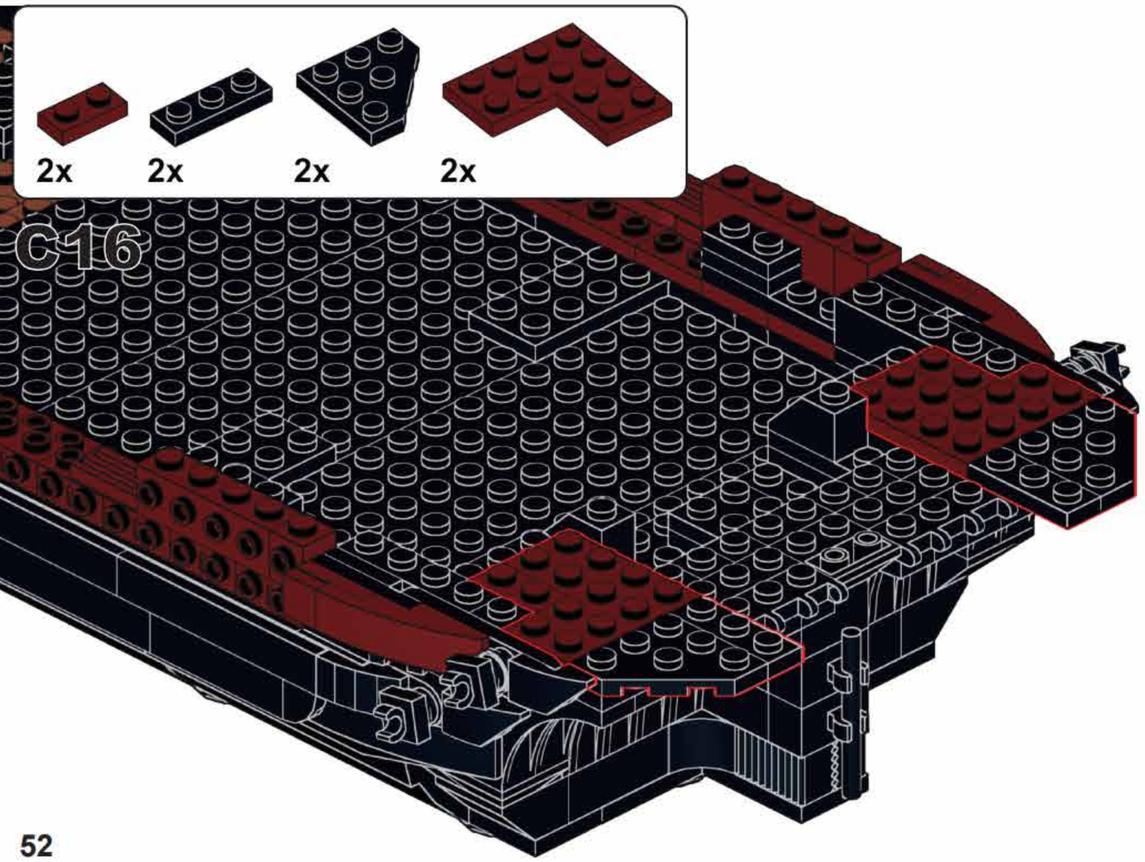
2x
2x
2x
2x
C16

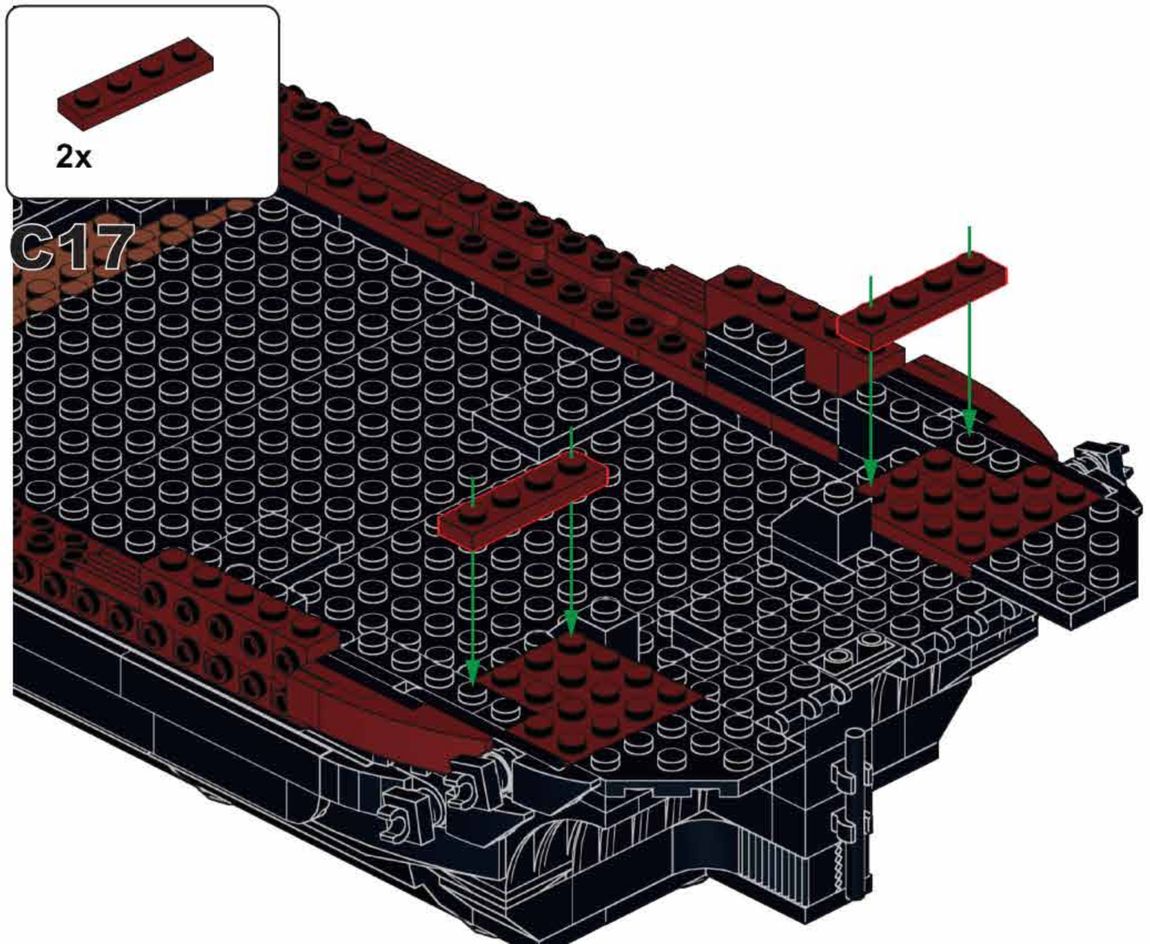
2x
C17

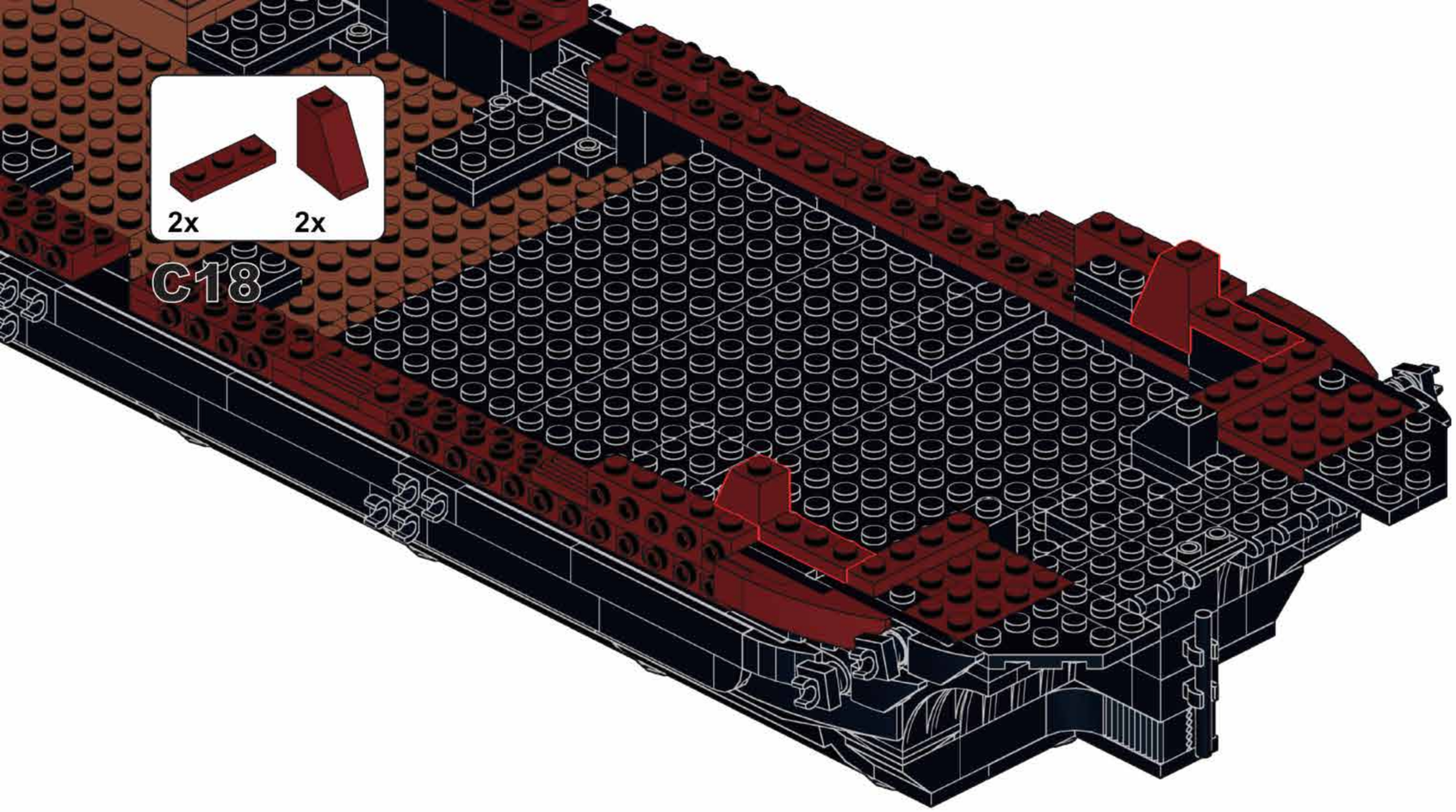
2x
2x
C18

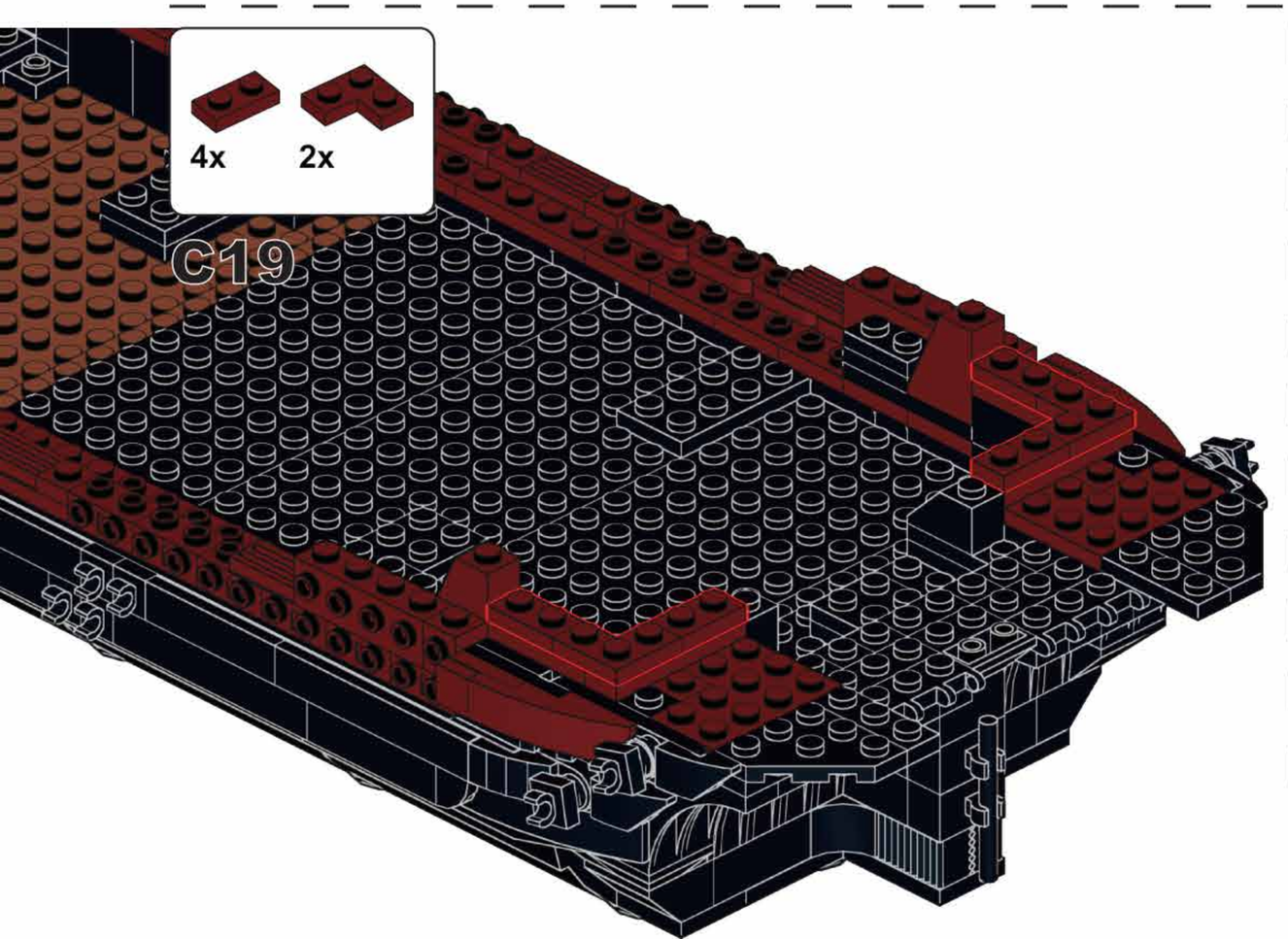
4x
2x
C19

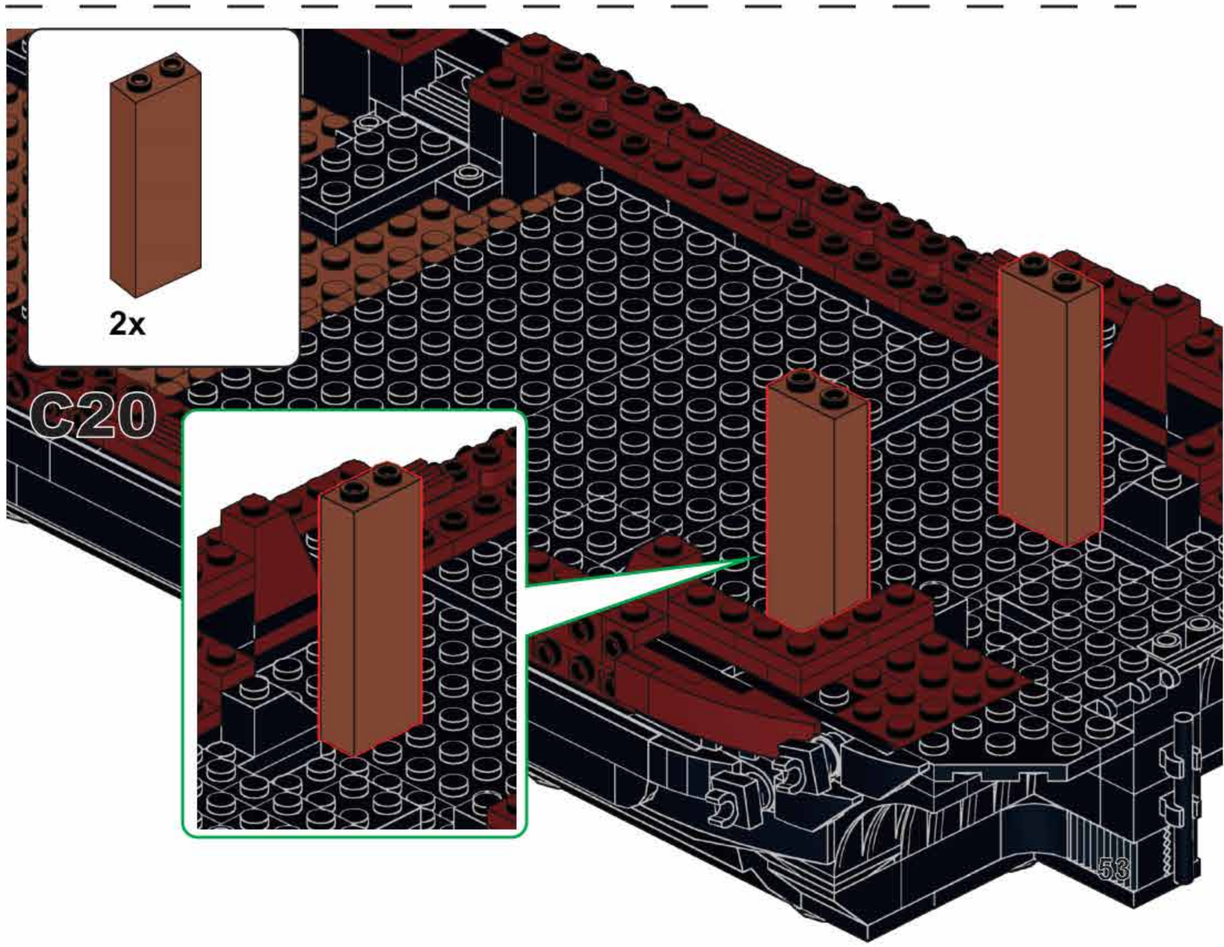
2x
C20

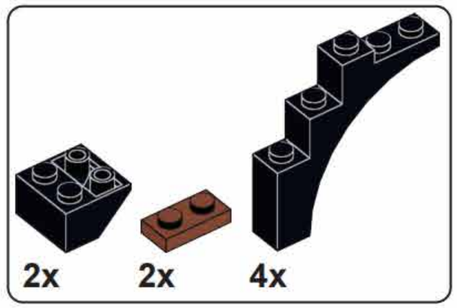

C21

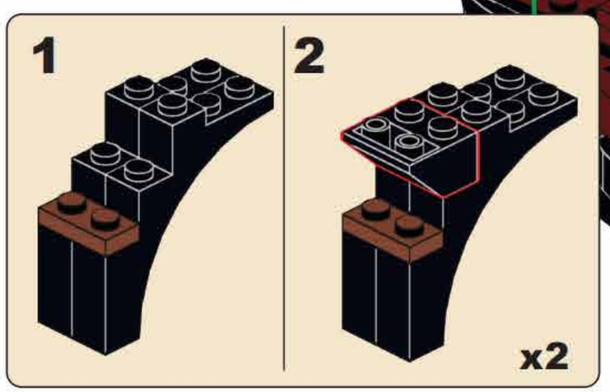

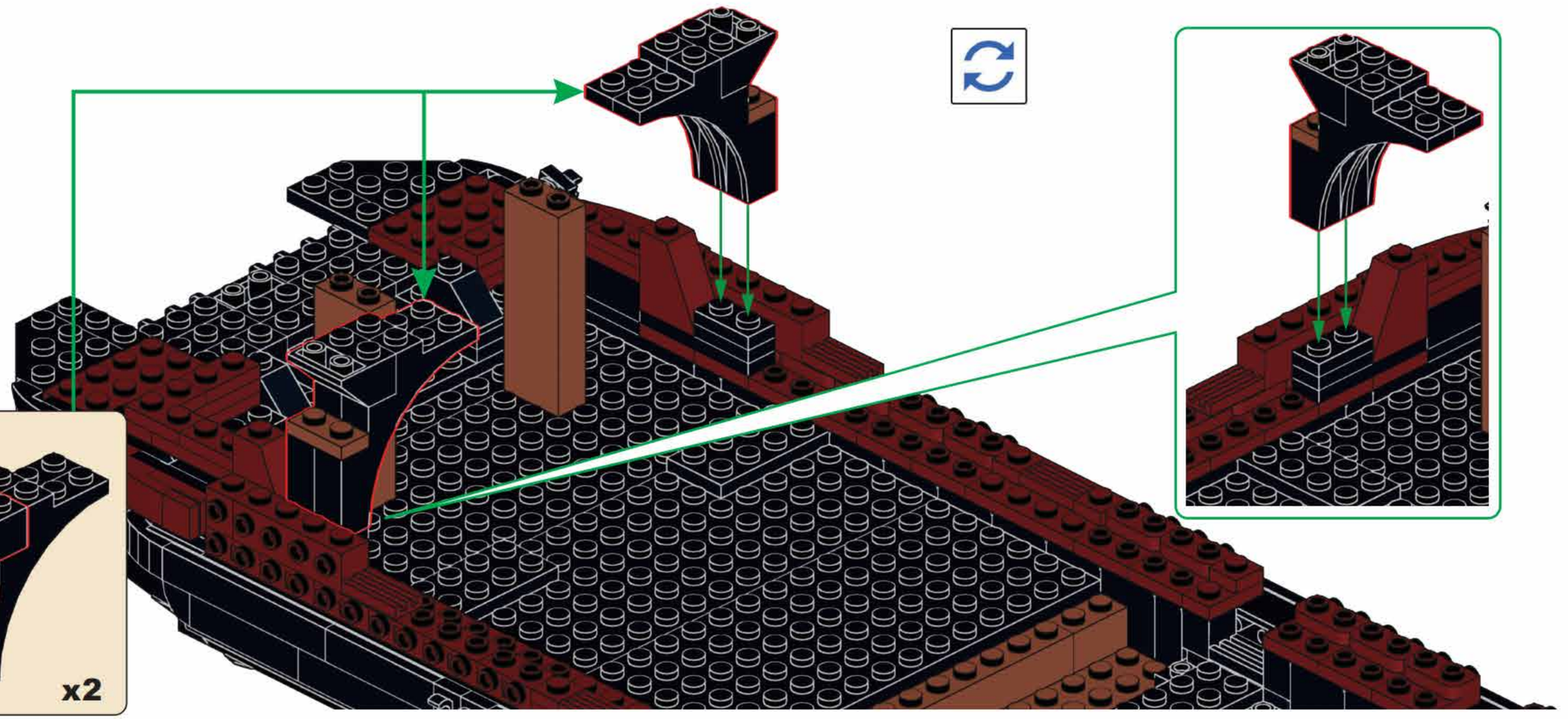

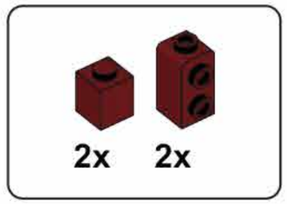

C22

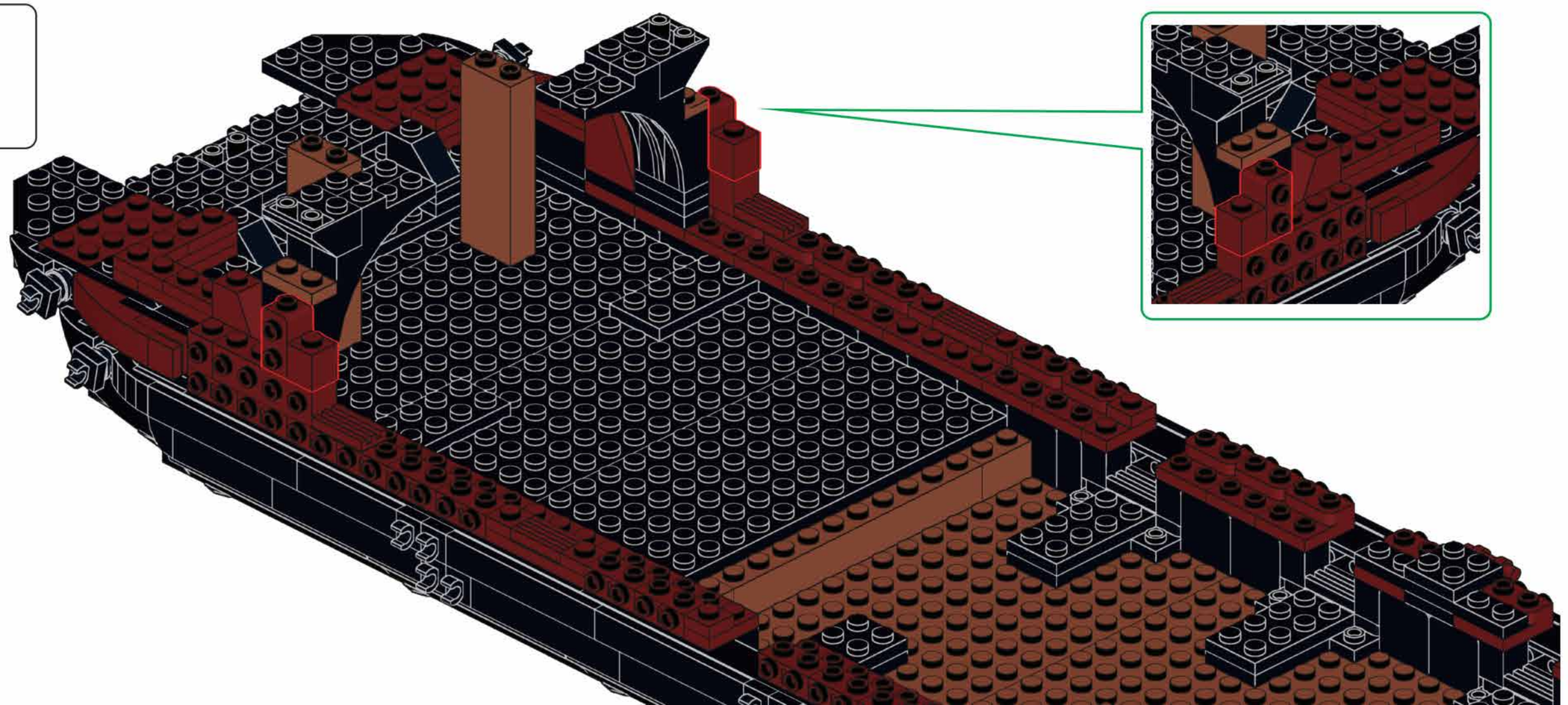

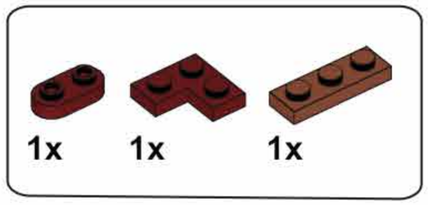

C23

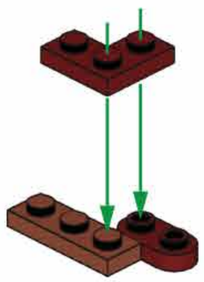

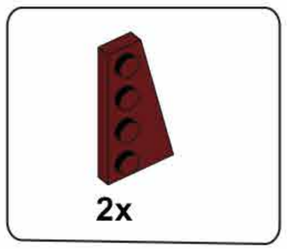

C24

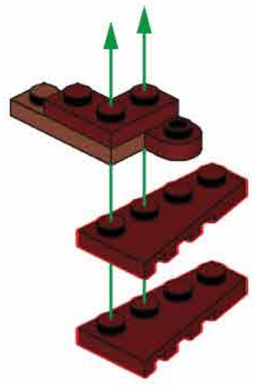

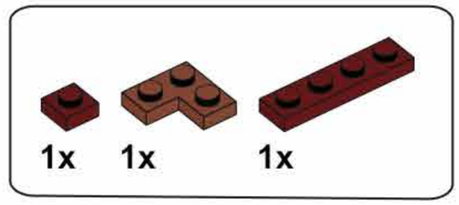

C25

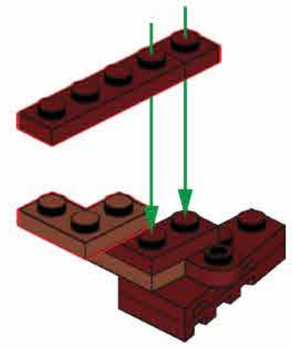

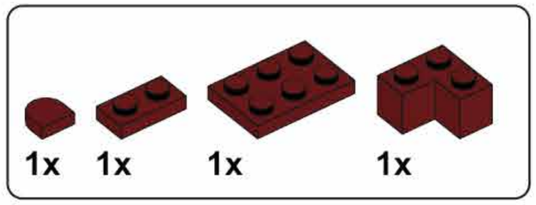

C26

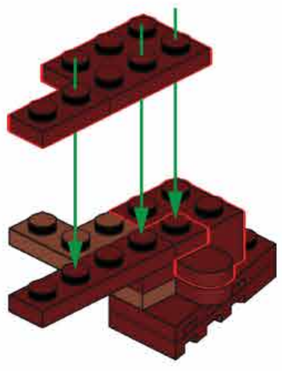

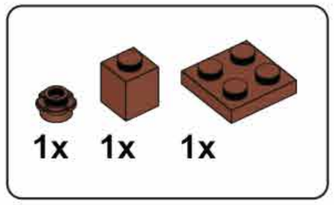

C27

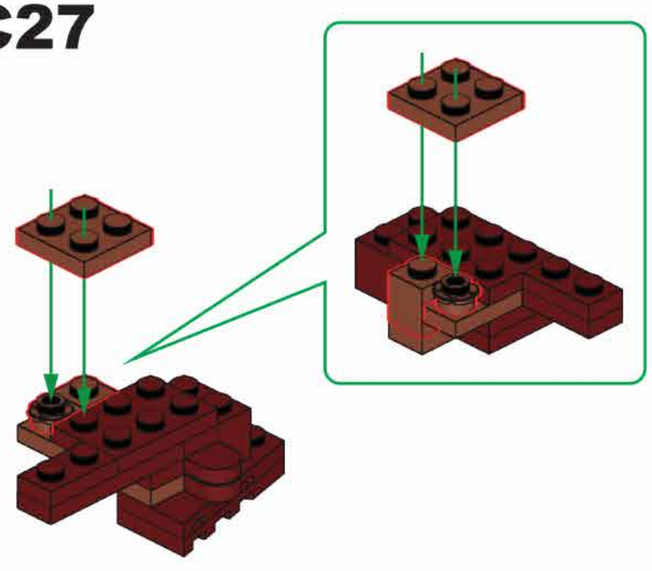

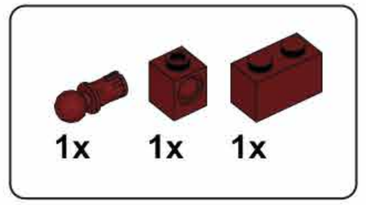

C28

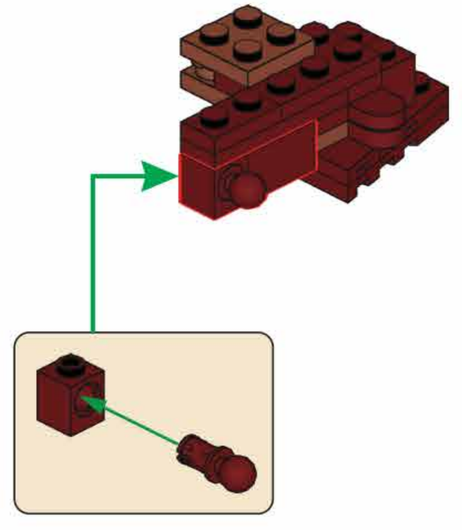

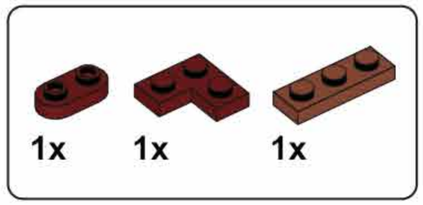

C29

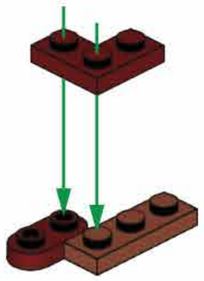

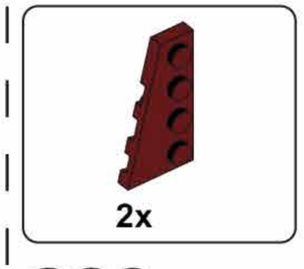

C30

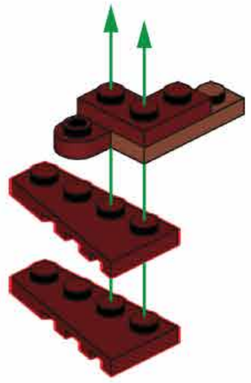

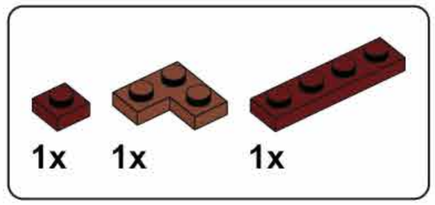

C31

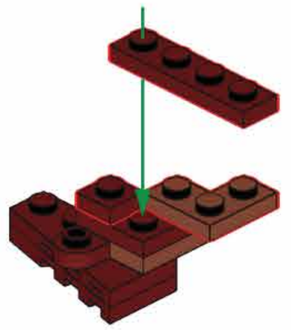

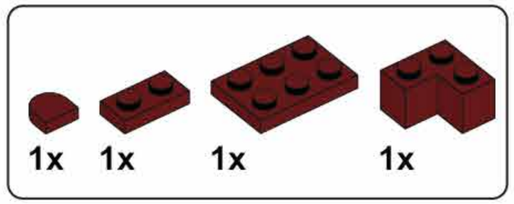

C32

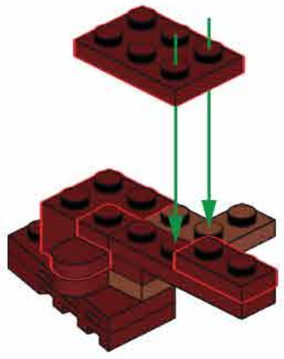

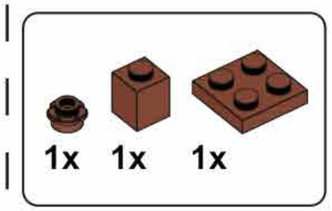

C33

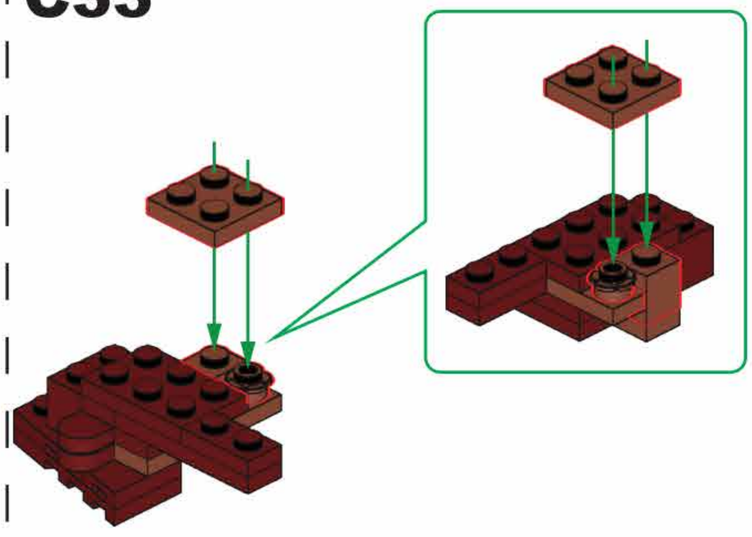

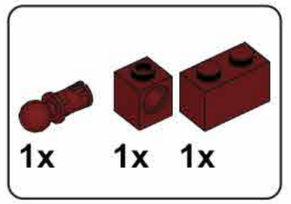

C34

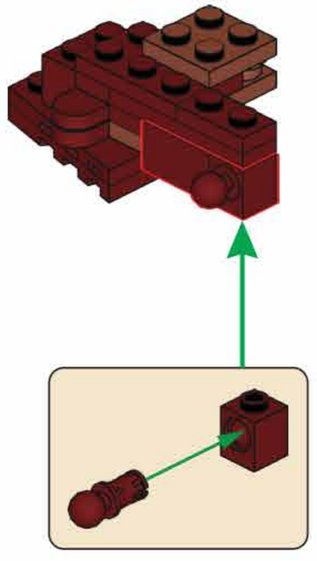

C35

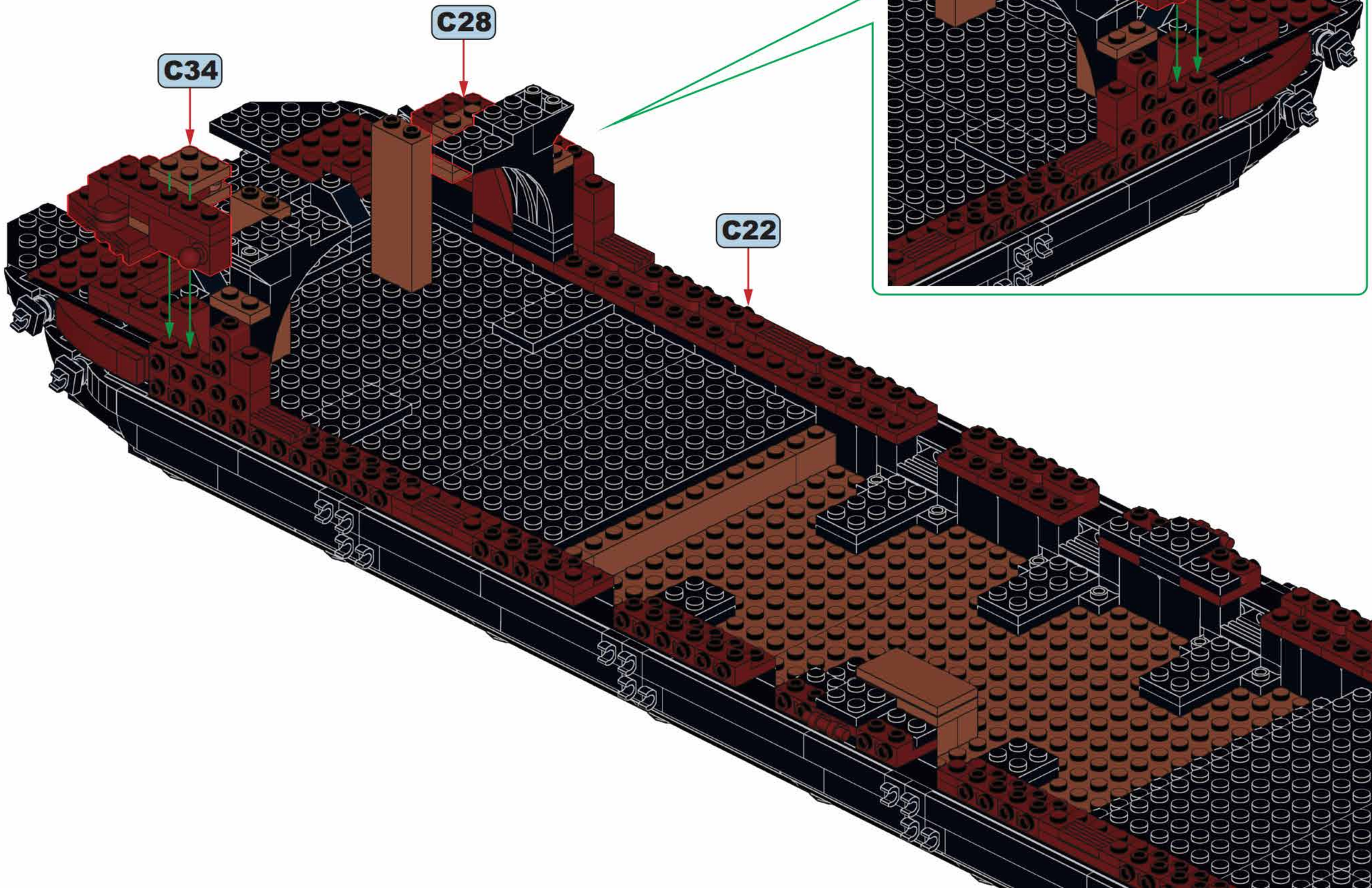

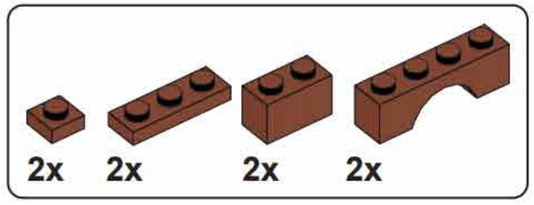

C36

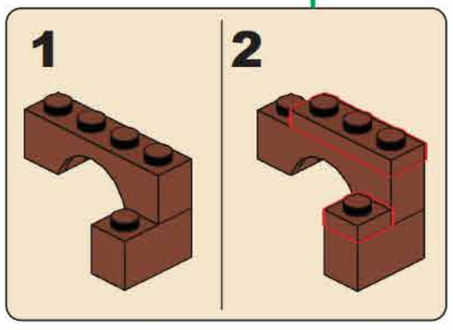

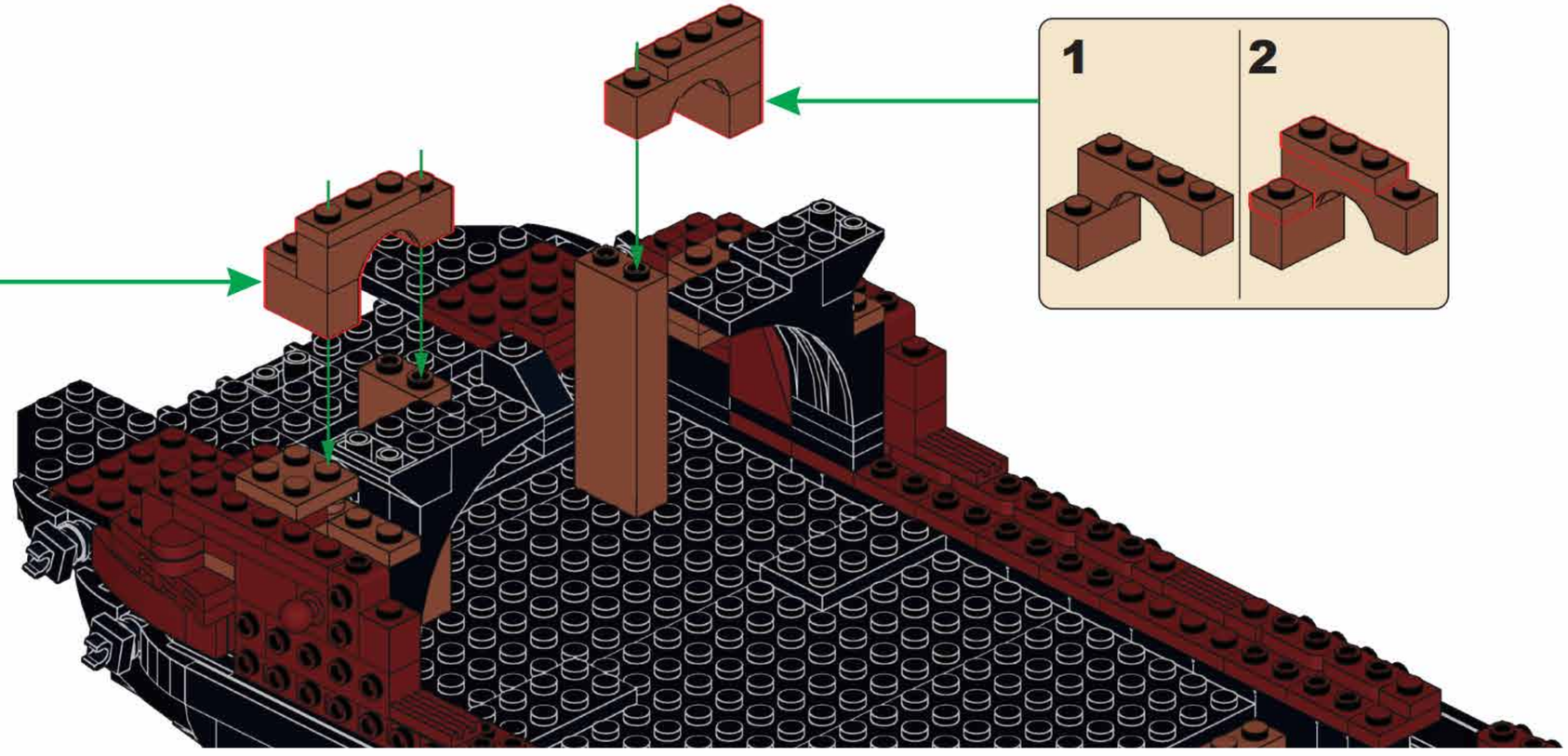

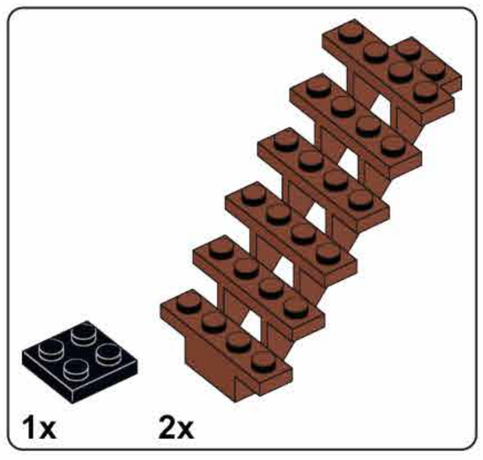

C37

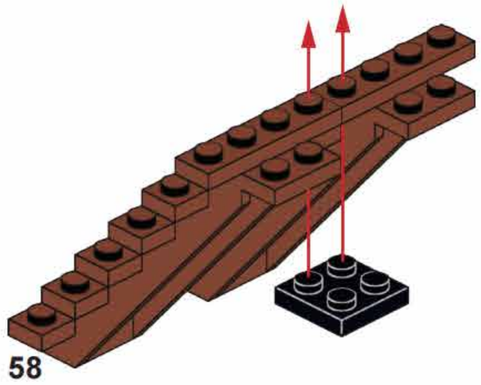

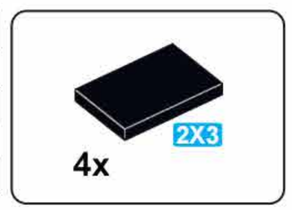

C38

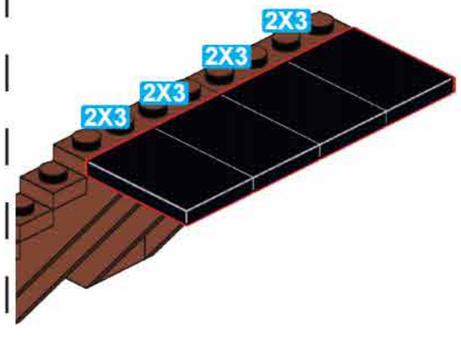

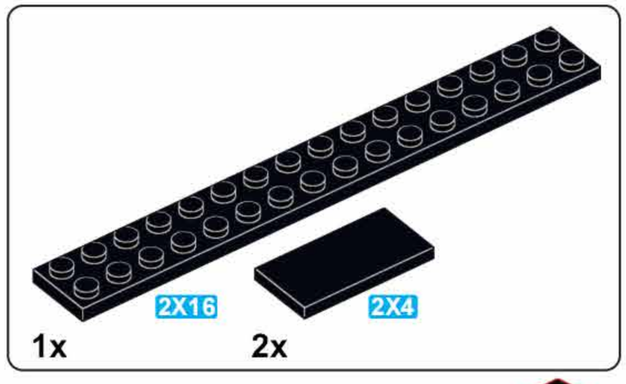

C39

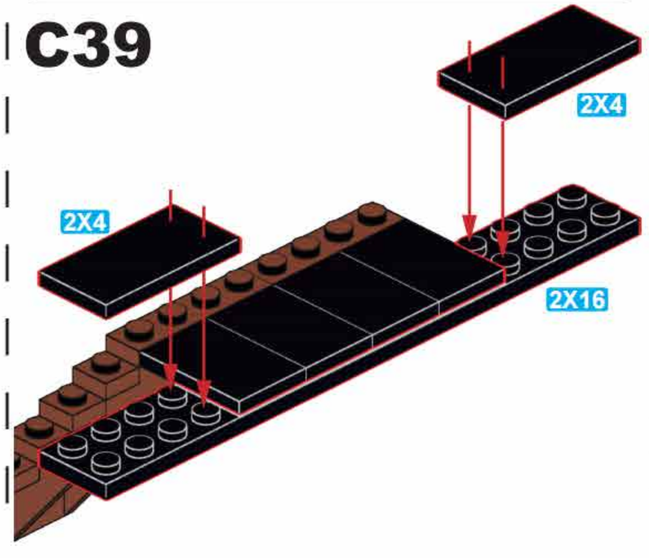

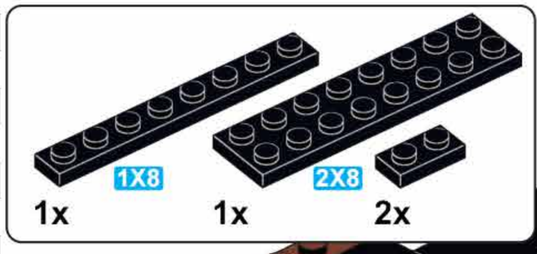

C40

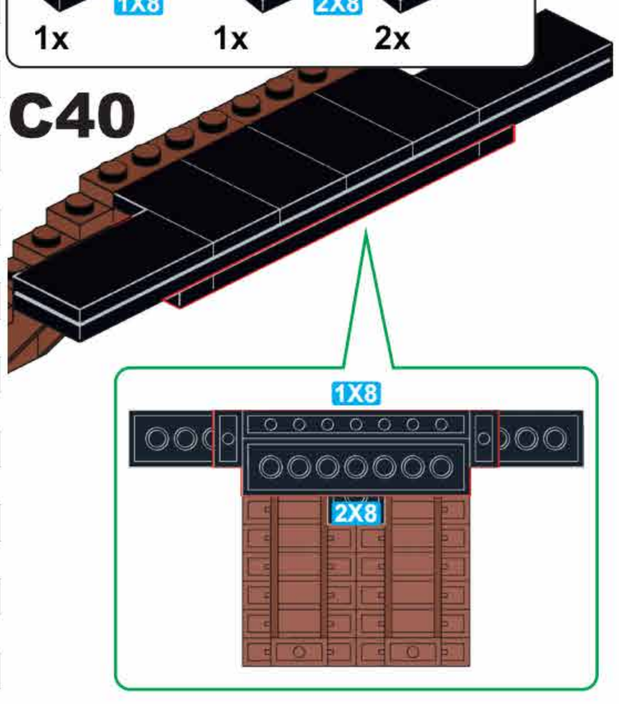

C41

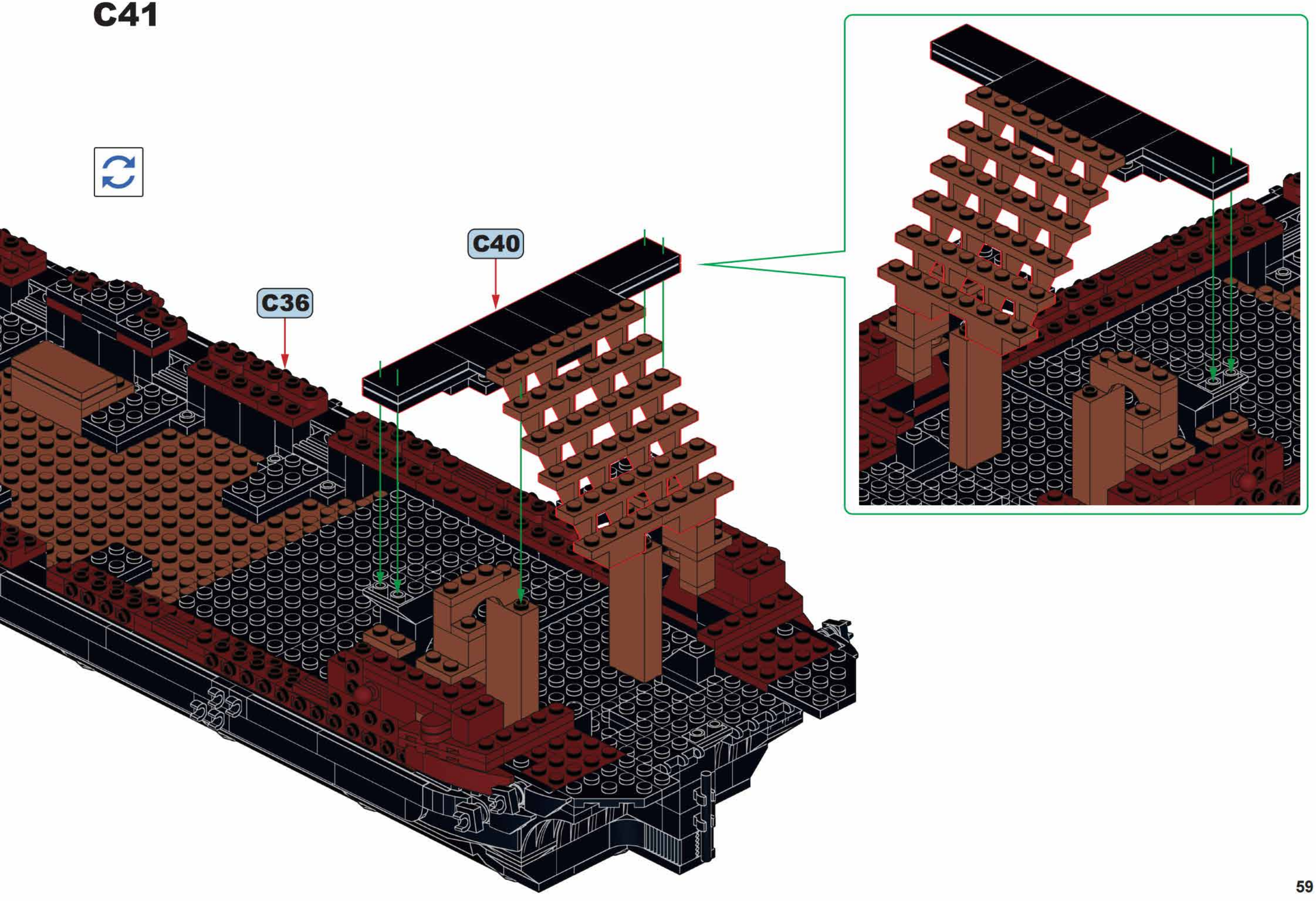

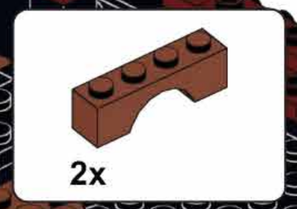

C42

C43

4X8

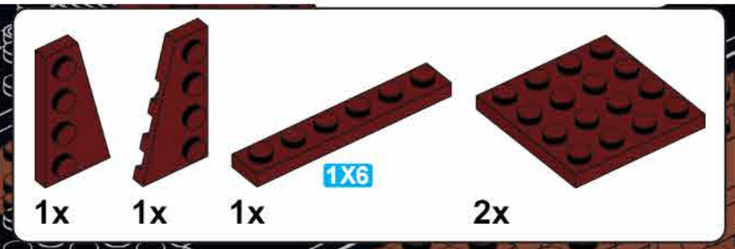

C44

1X6

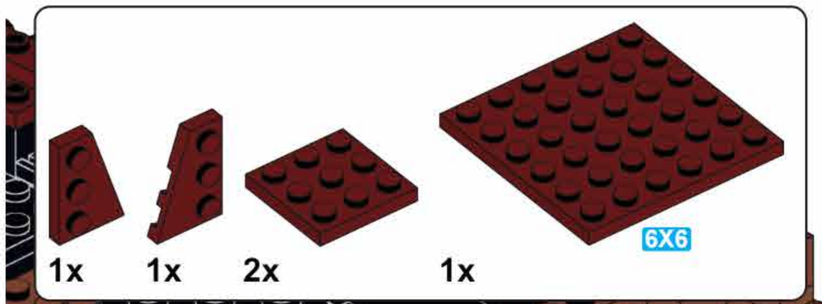

C45

6X6

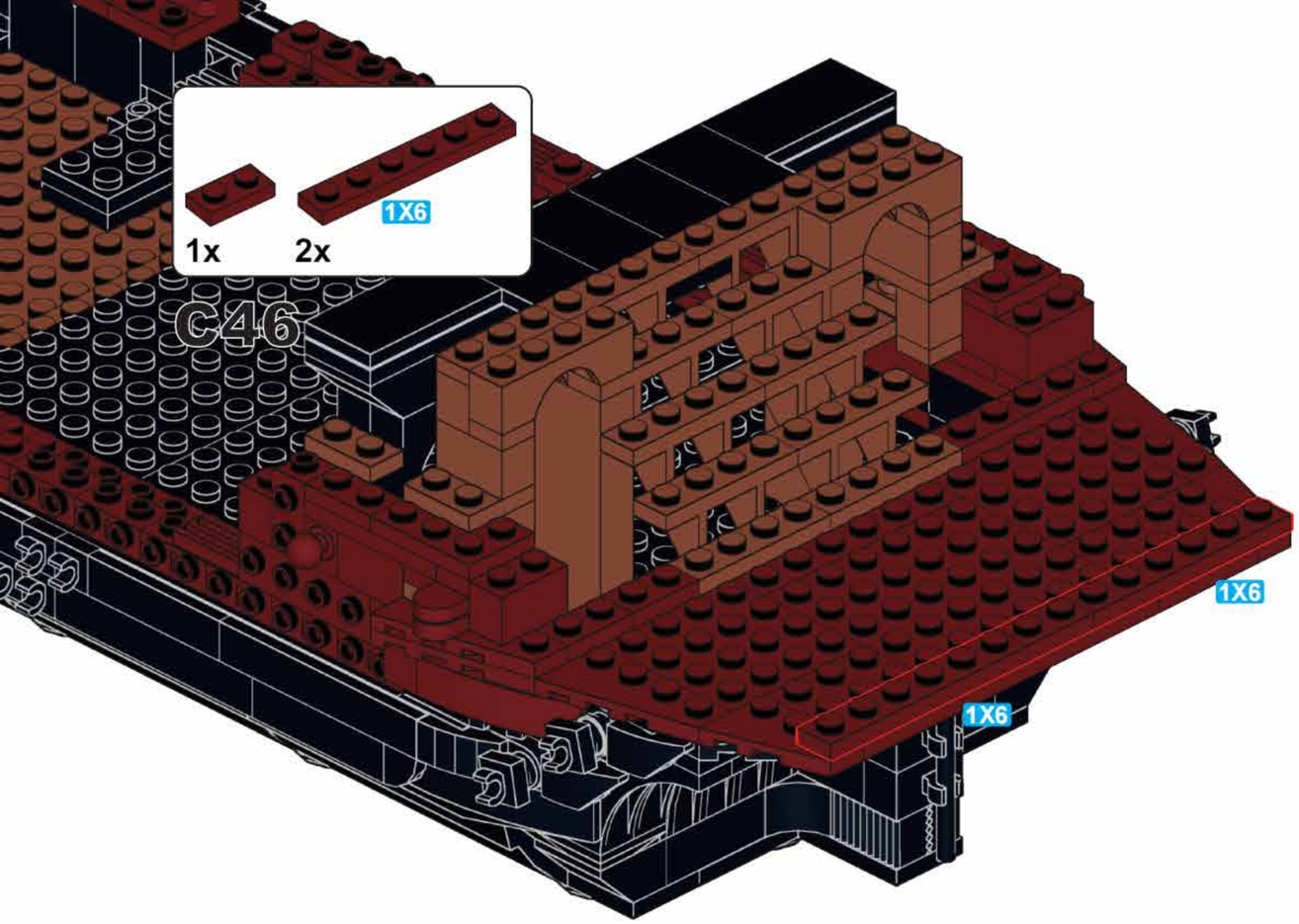
1x
2x
1X6
C46
1X6
1X6

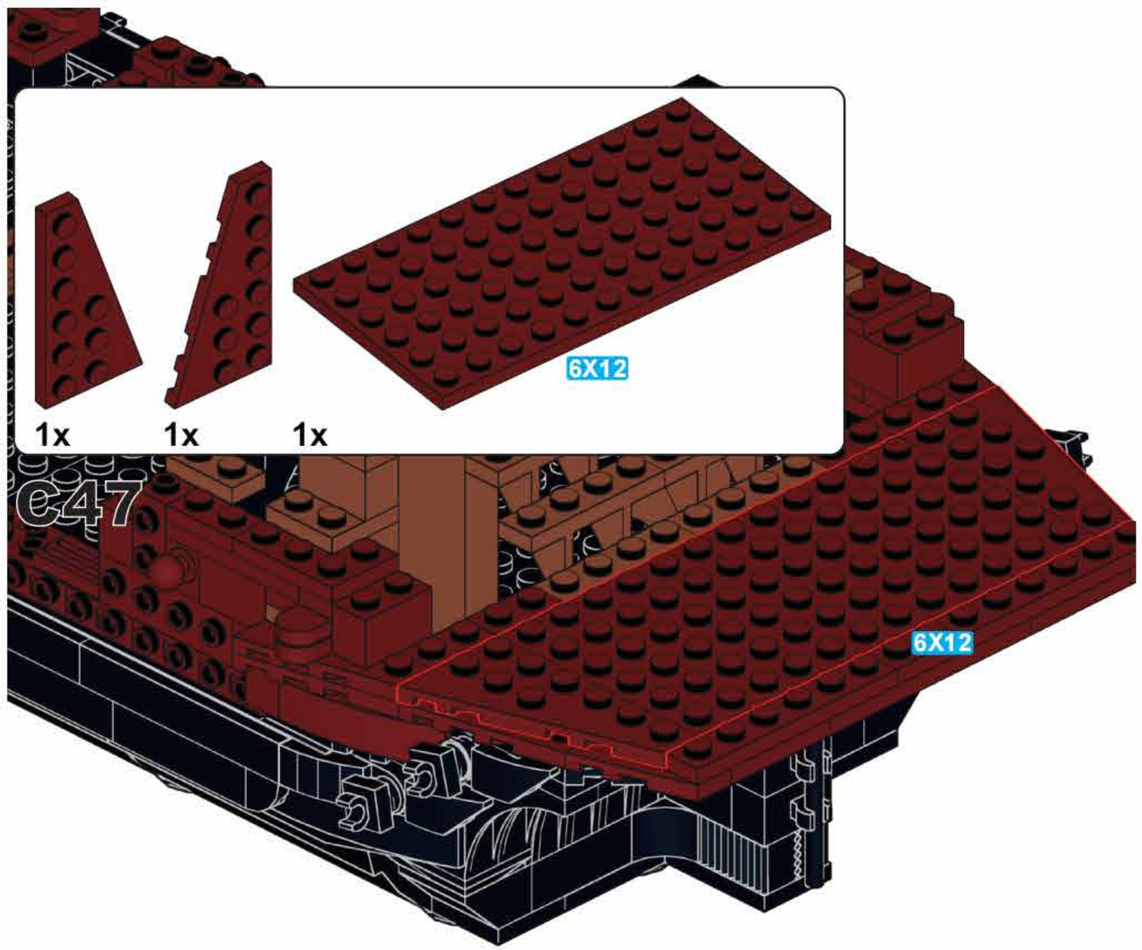
1x
1x
1x
6X12
C47
6X12

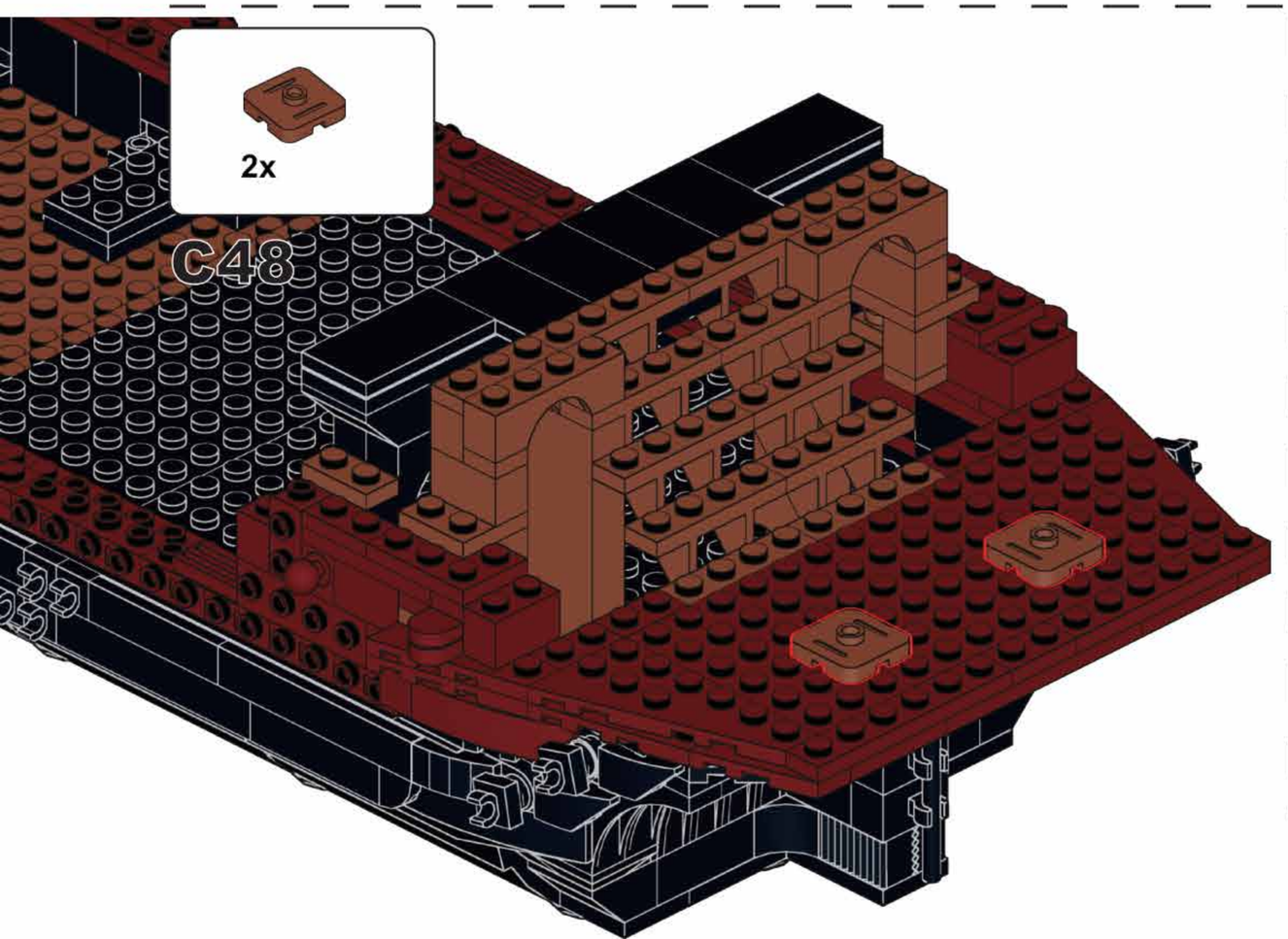
2x
C48

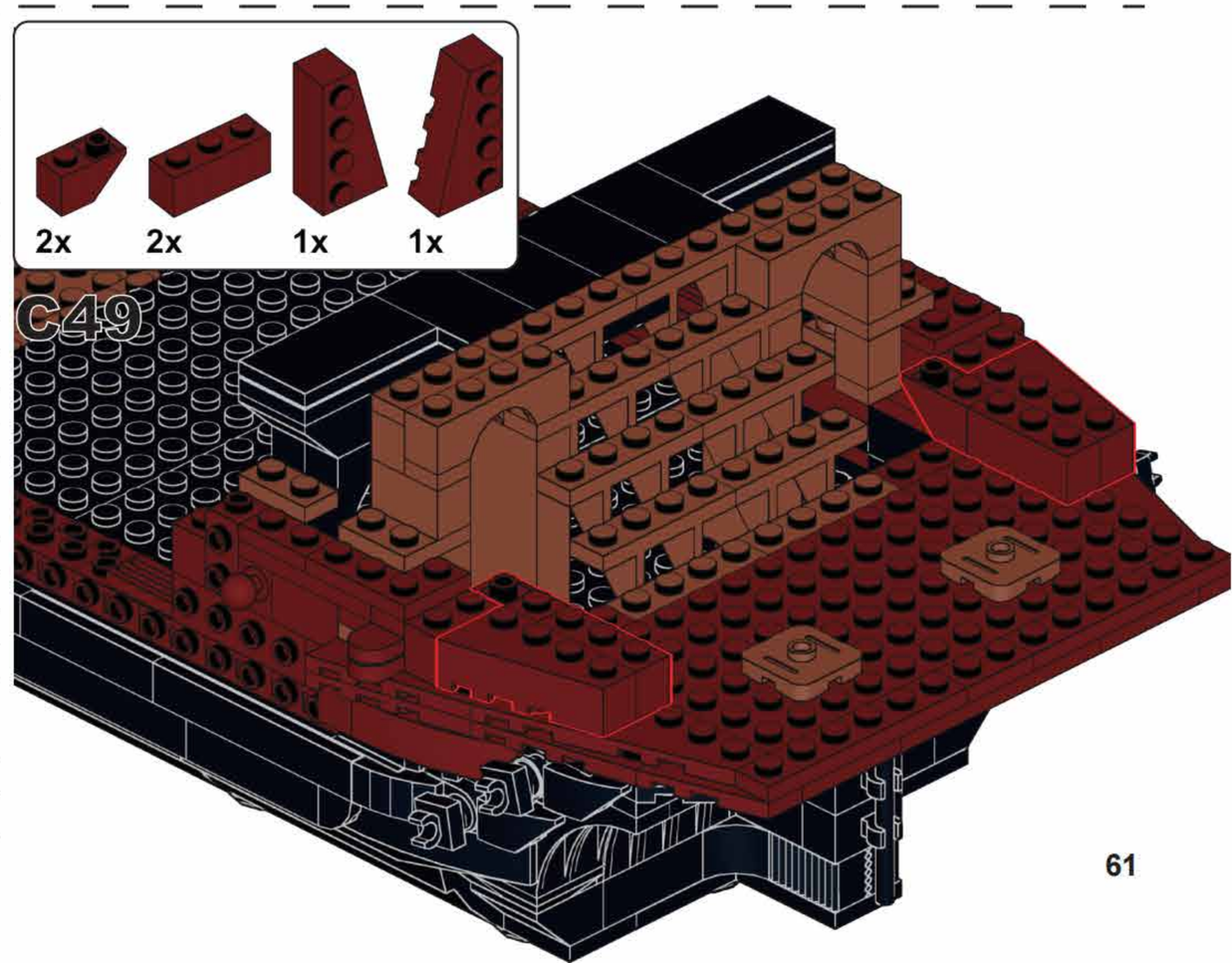
2x
2x
1x
1x
C49

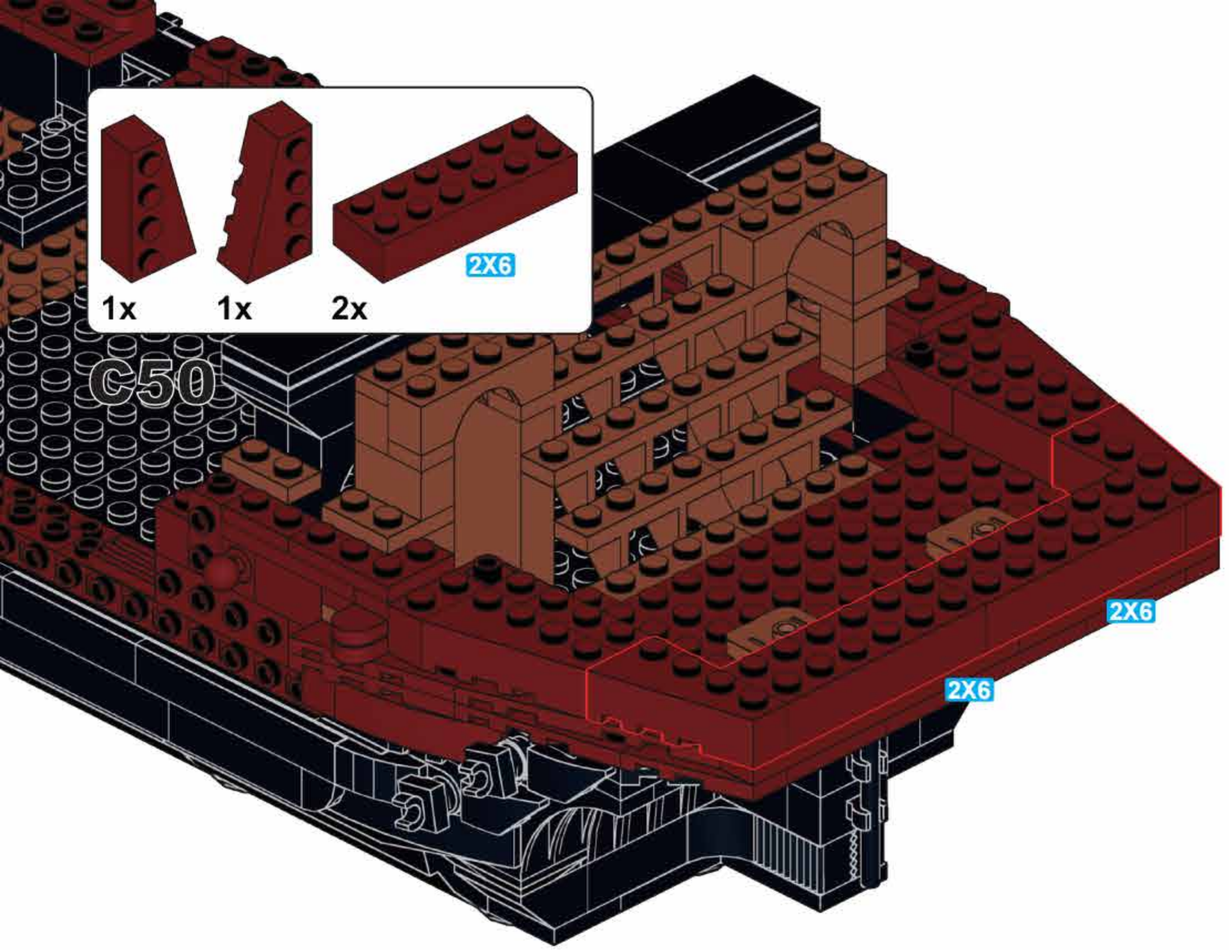
1x
1x
2x
2X6
C50
2X6
2X6

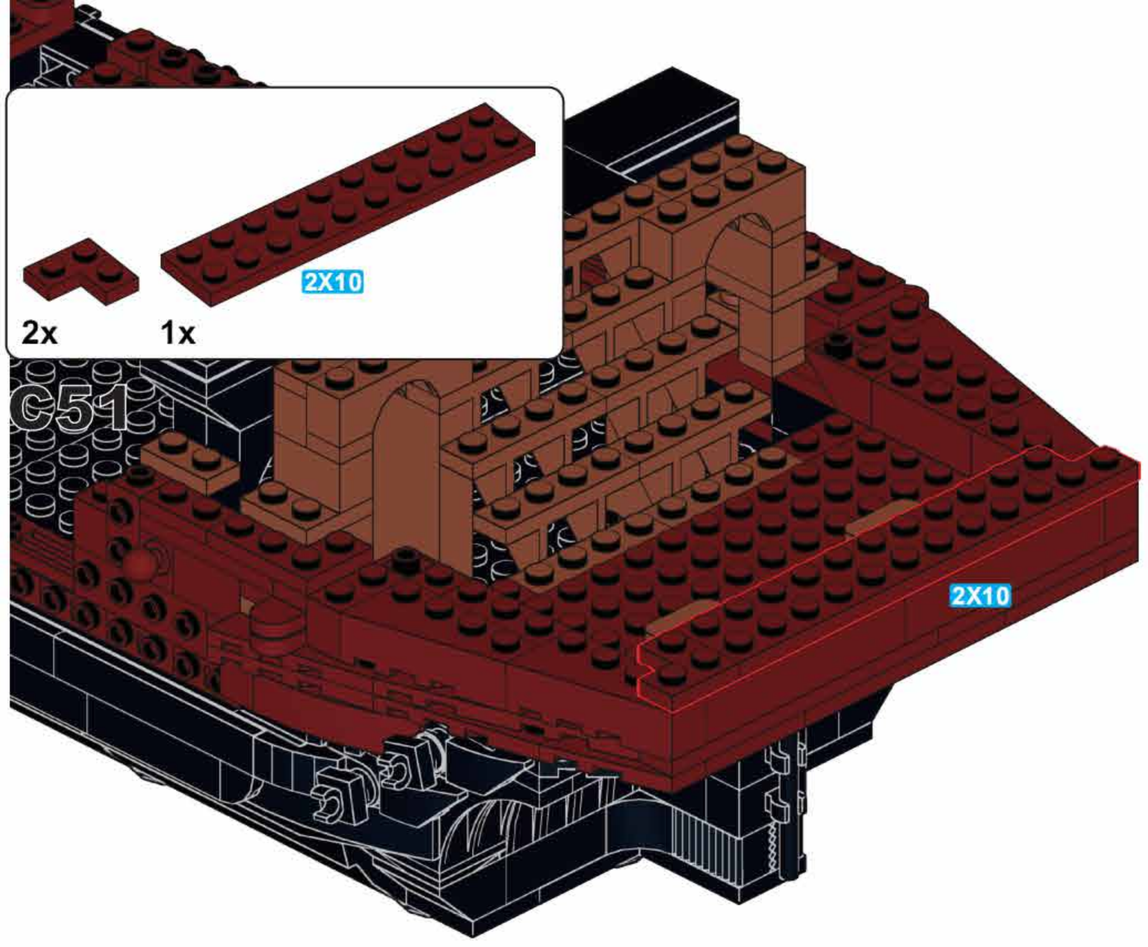
2x
1x
2X10
C51
2X10

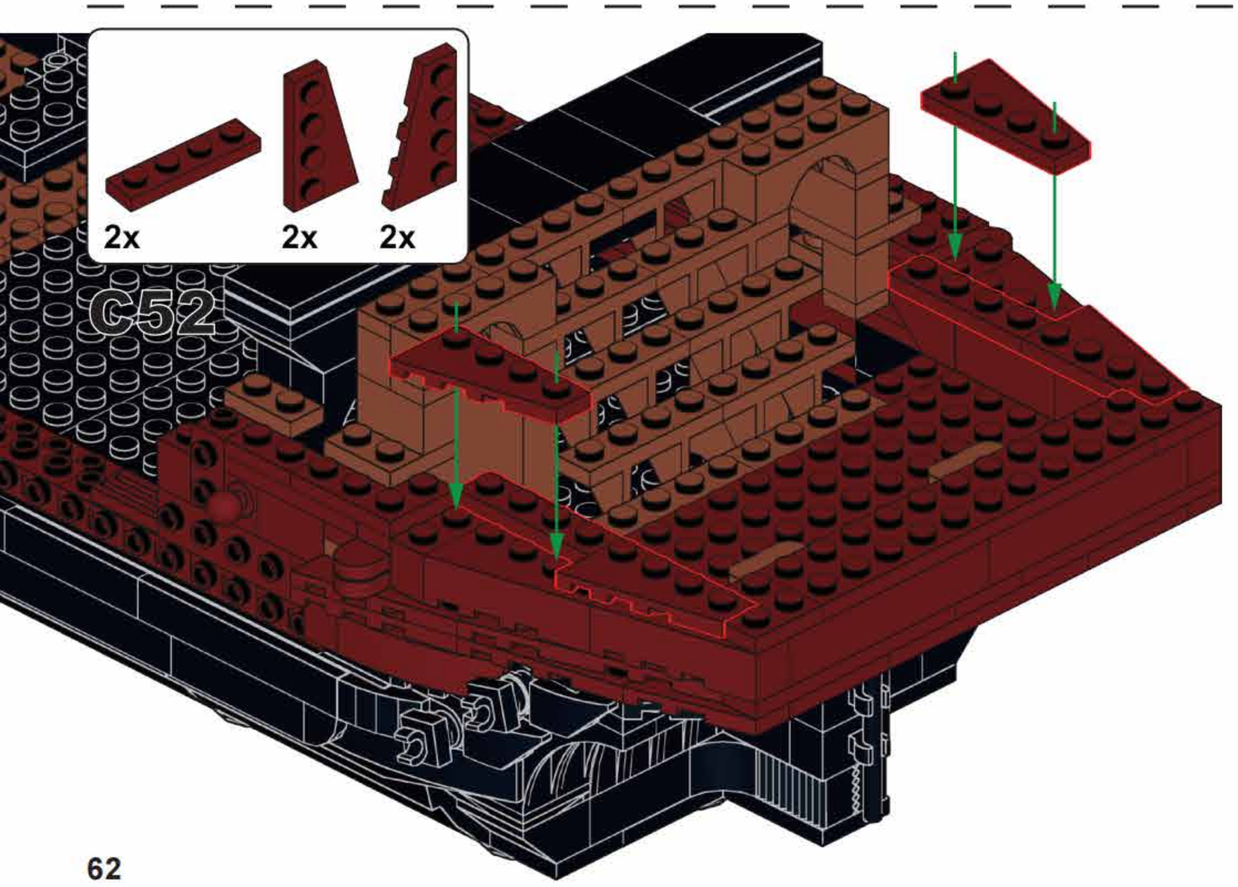
2x
2x
2x
C52

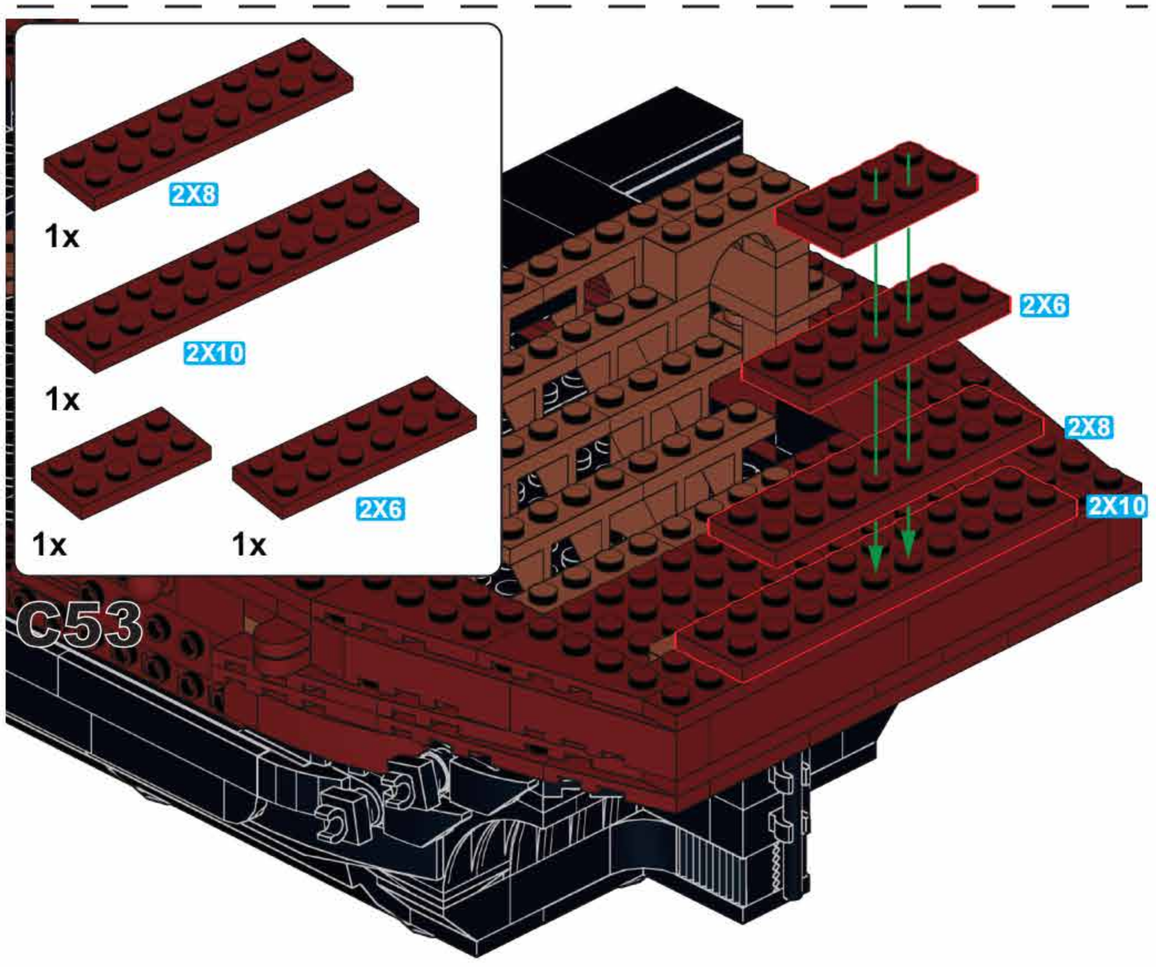
2X8
1x
2X10
1x
1x
2X6
1x
C53
2X6
2X8
2X10

C54

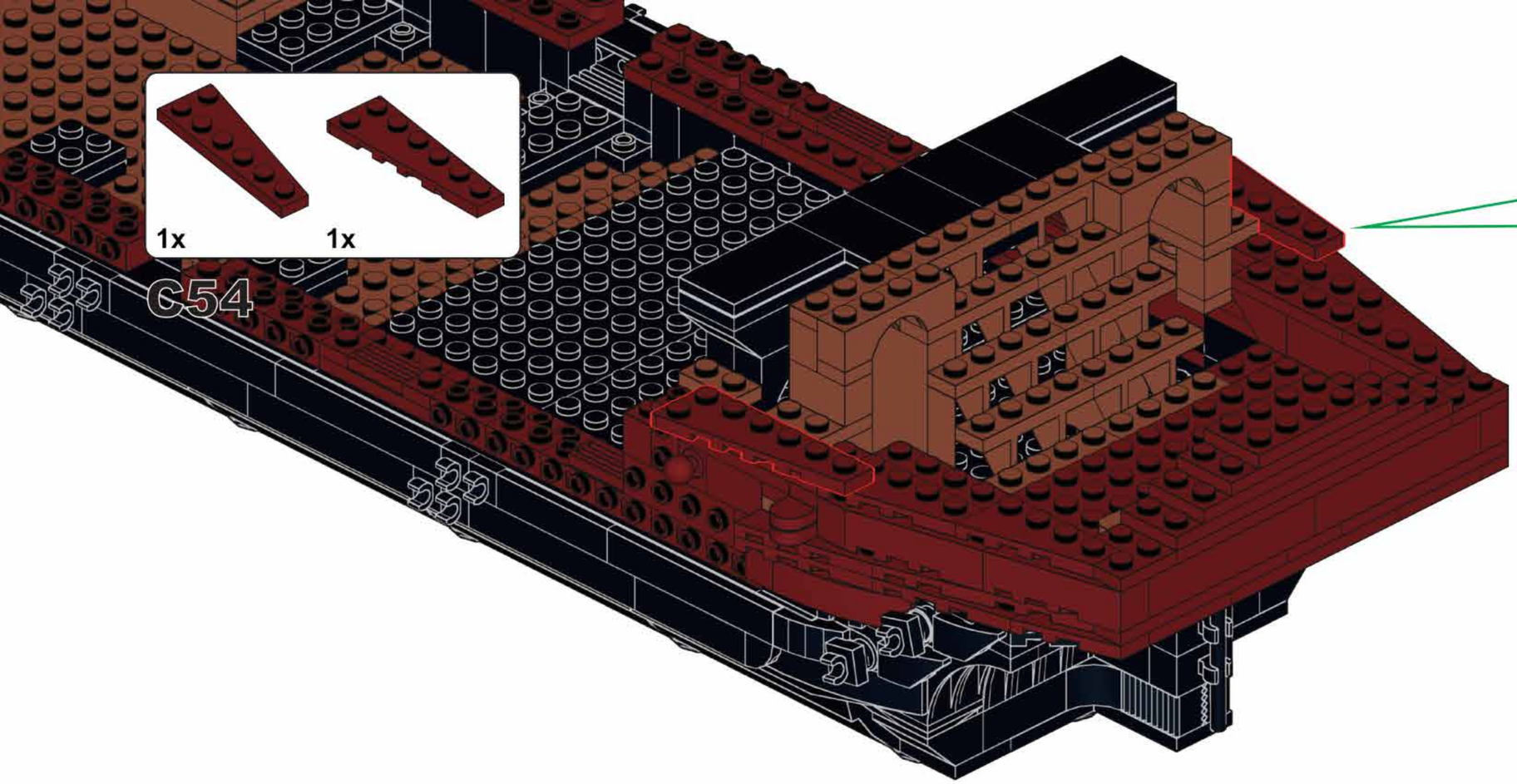

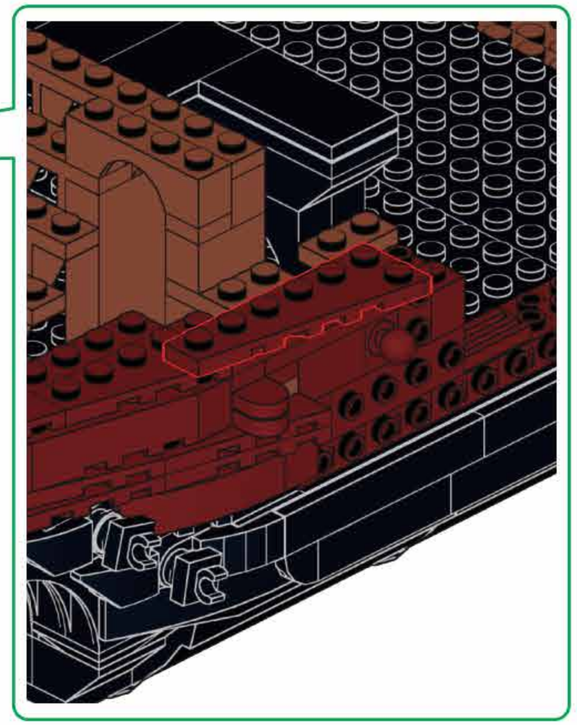

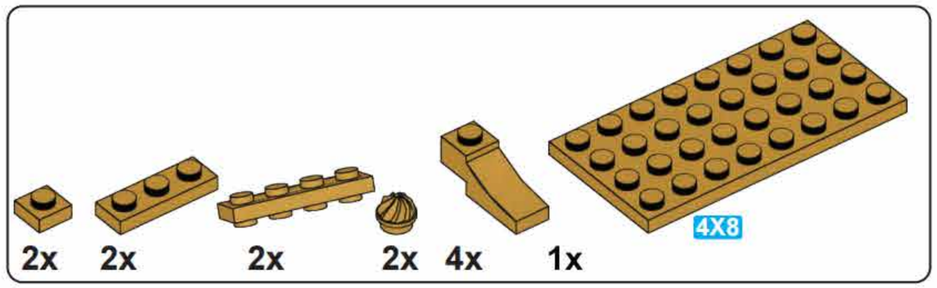

C55

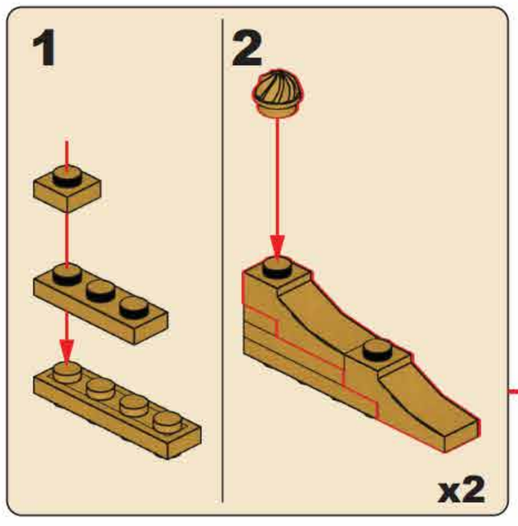

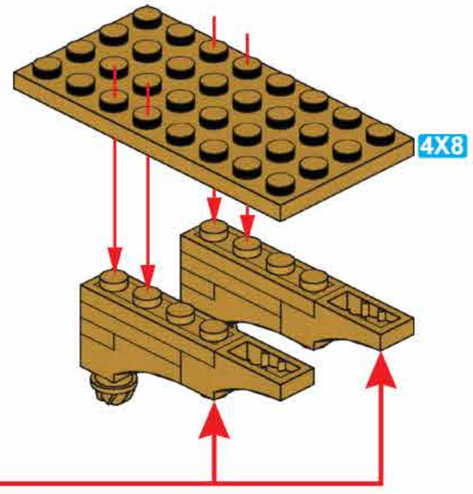

C56

C55

C54

2x

1X8

C57

1X8

1X8

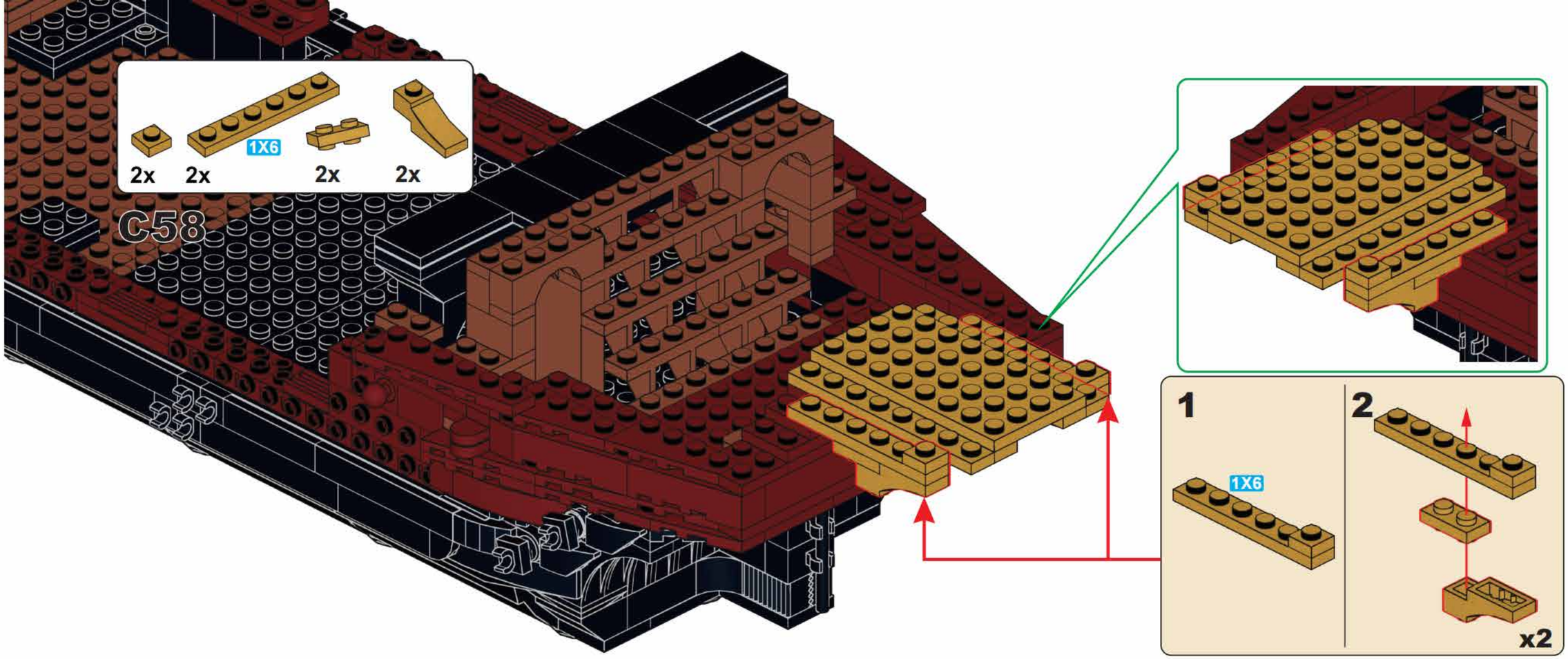
2x
1X6
2x
2x
2x
C58
1
1X6
2
x2

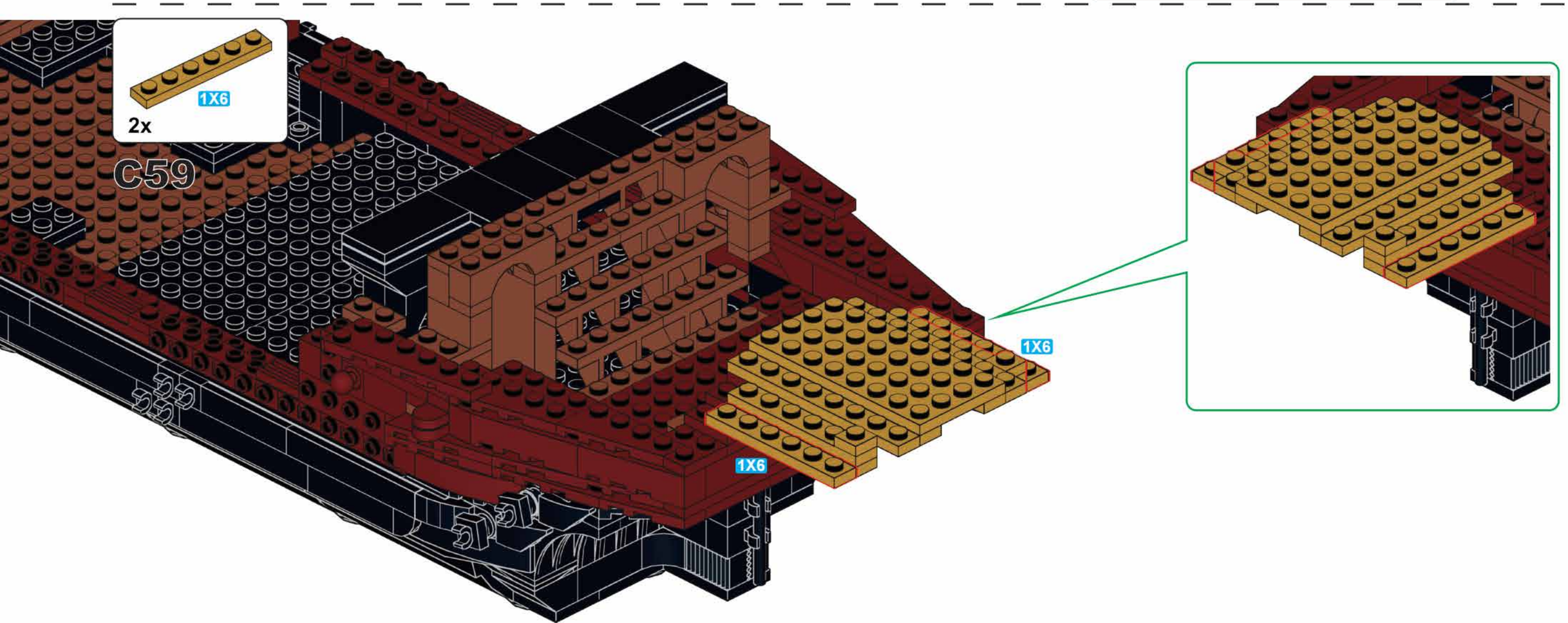
1X6
2x
C59
1X6
1X6

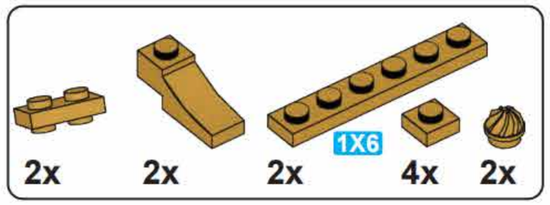

C60

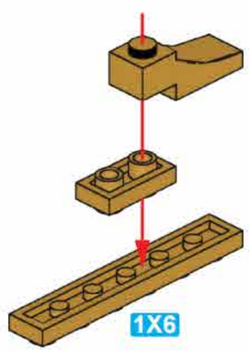

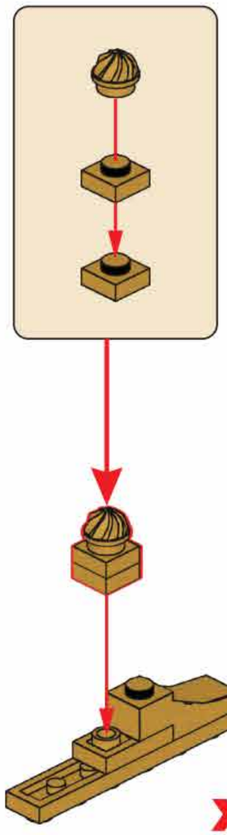

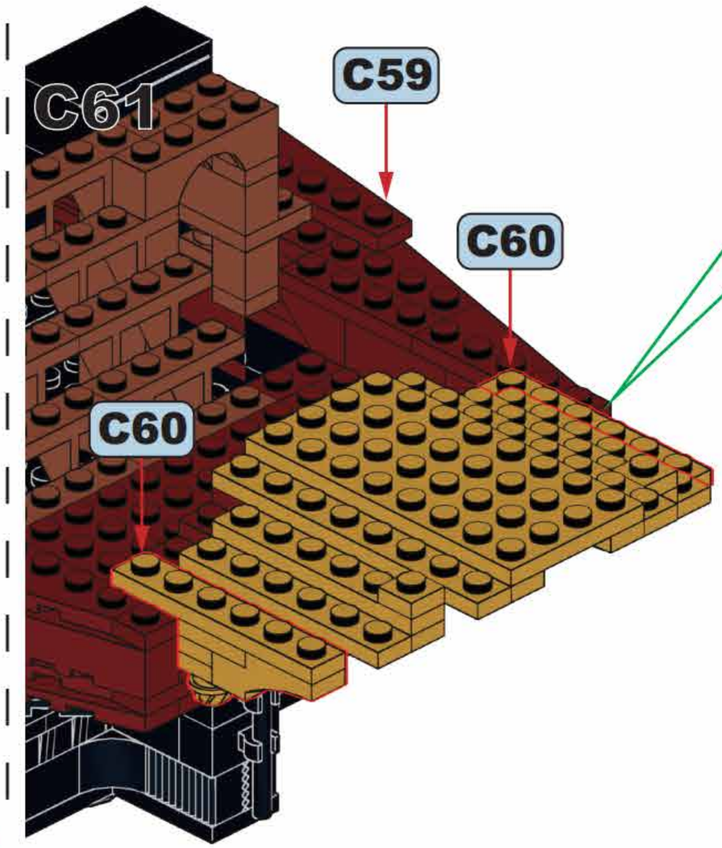

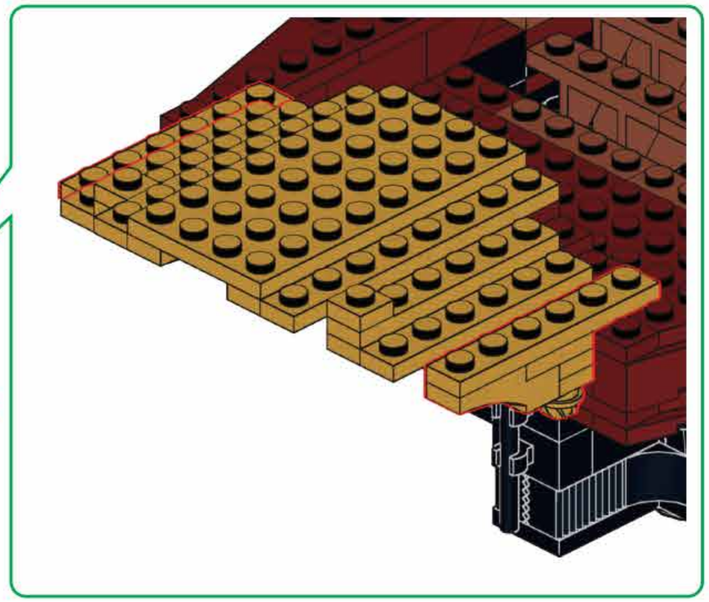

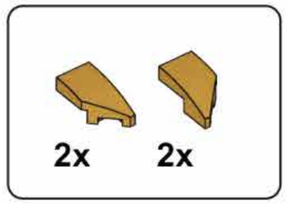

C62

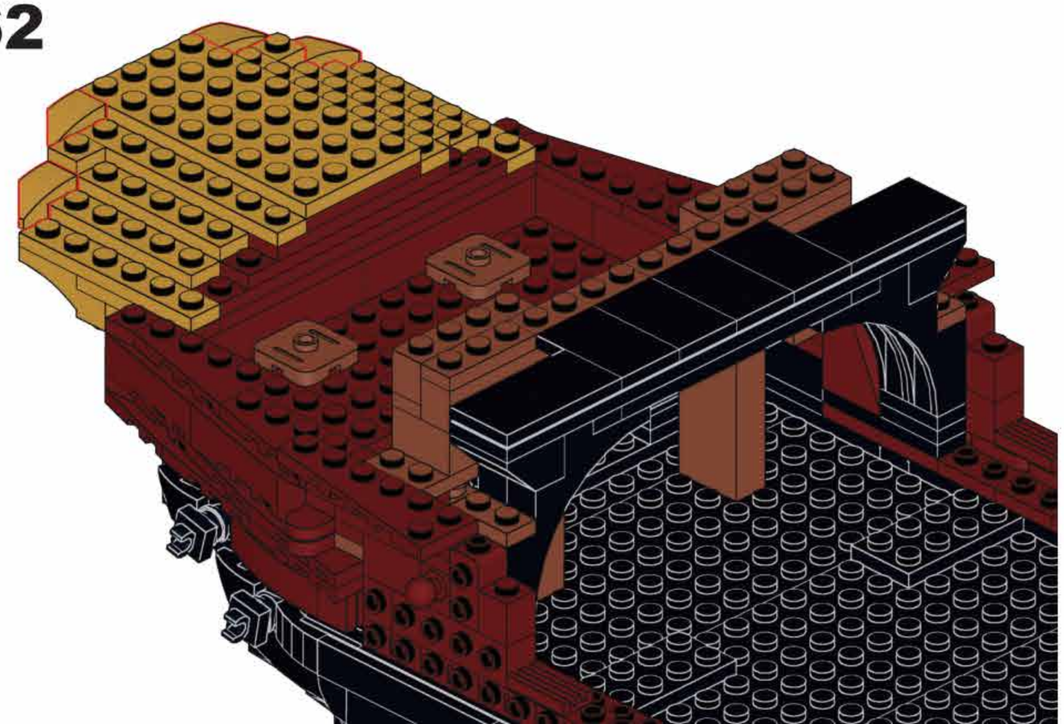

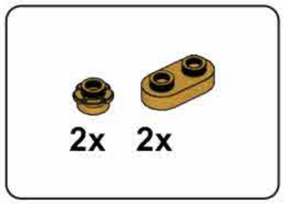

C63

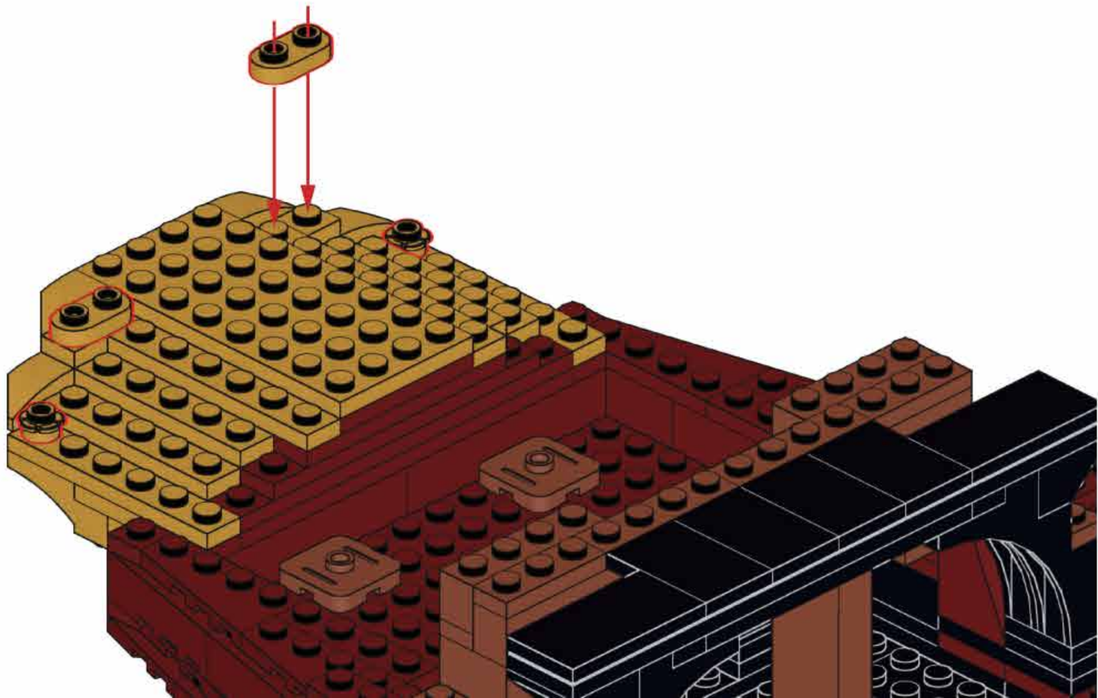

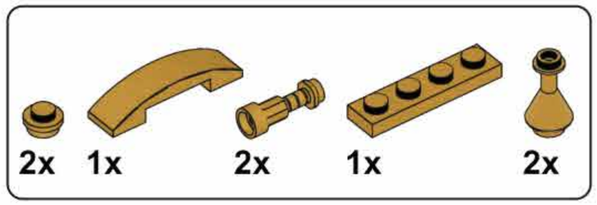

C64

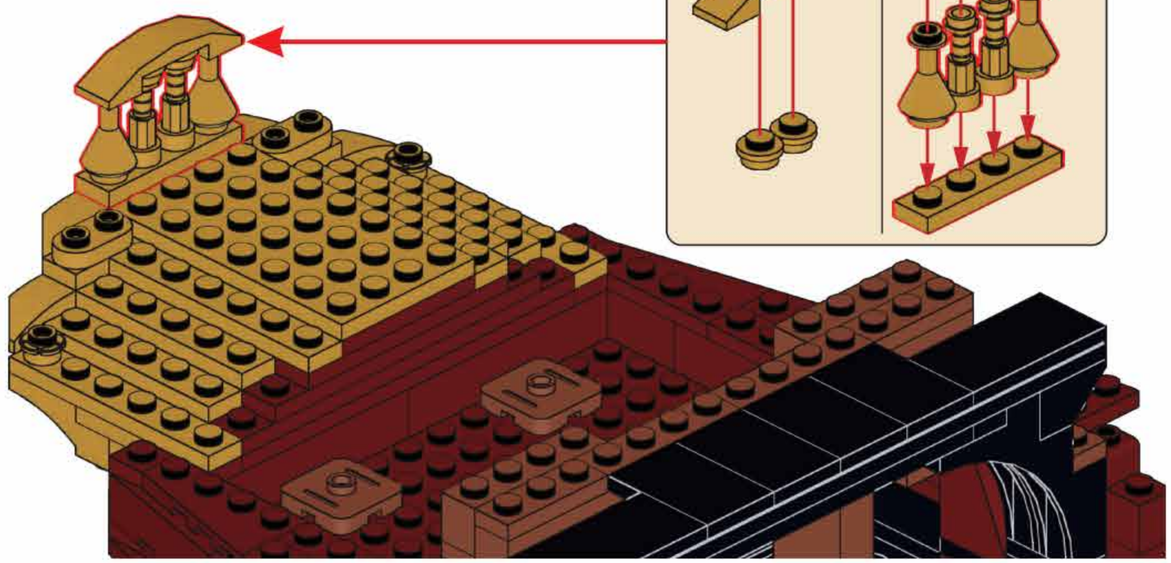

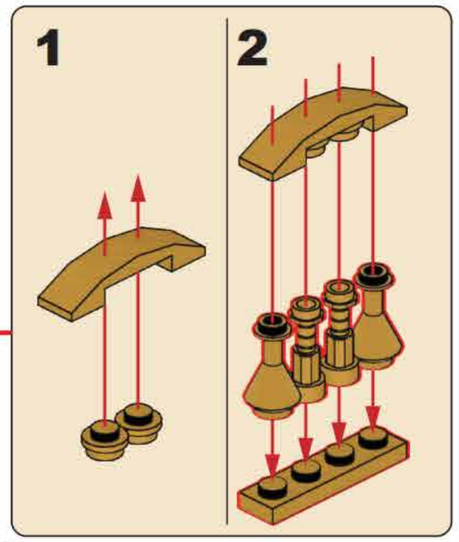

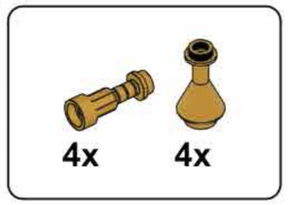

C65

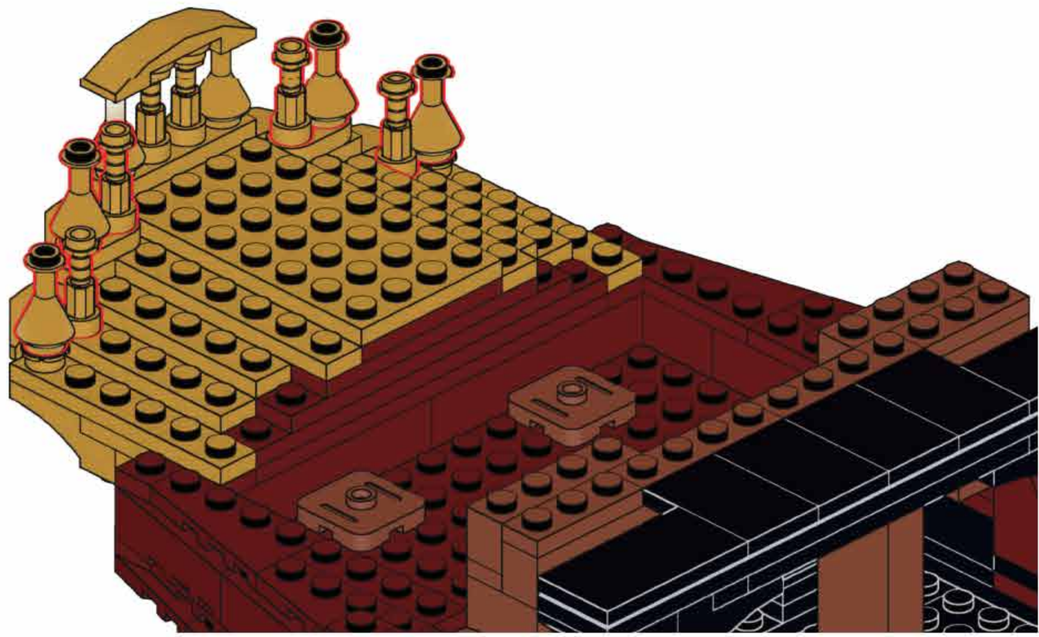

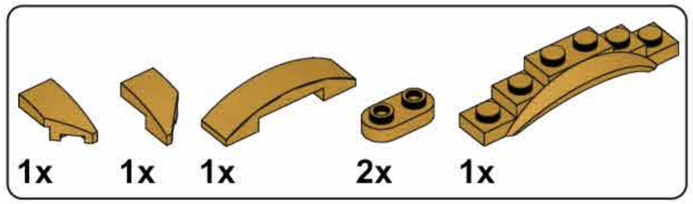

C66

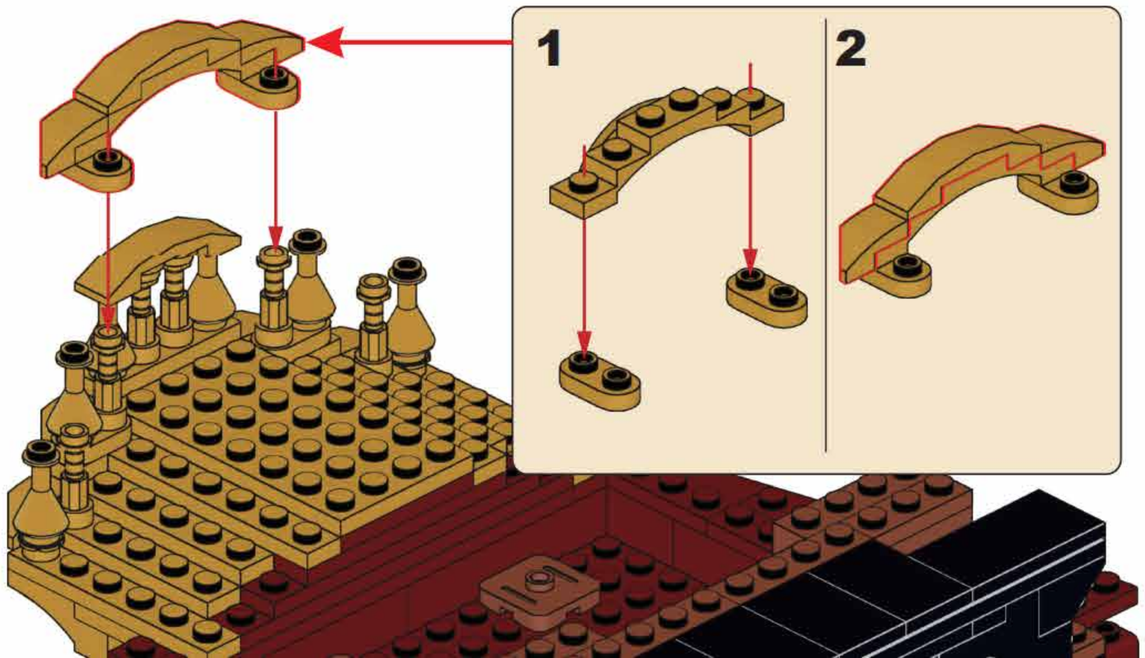

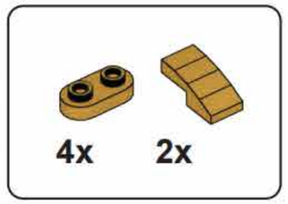

C67

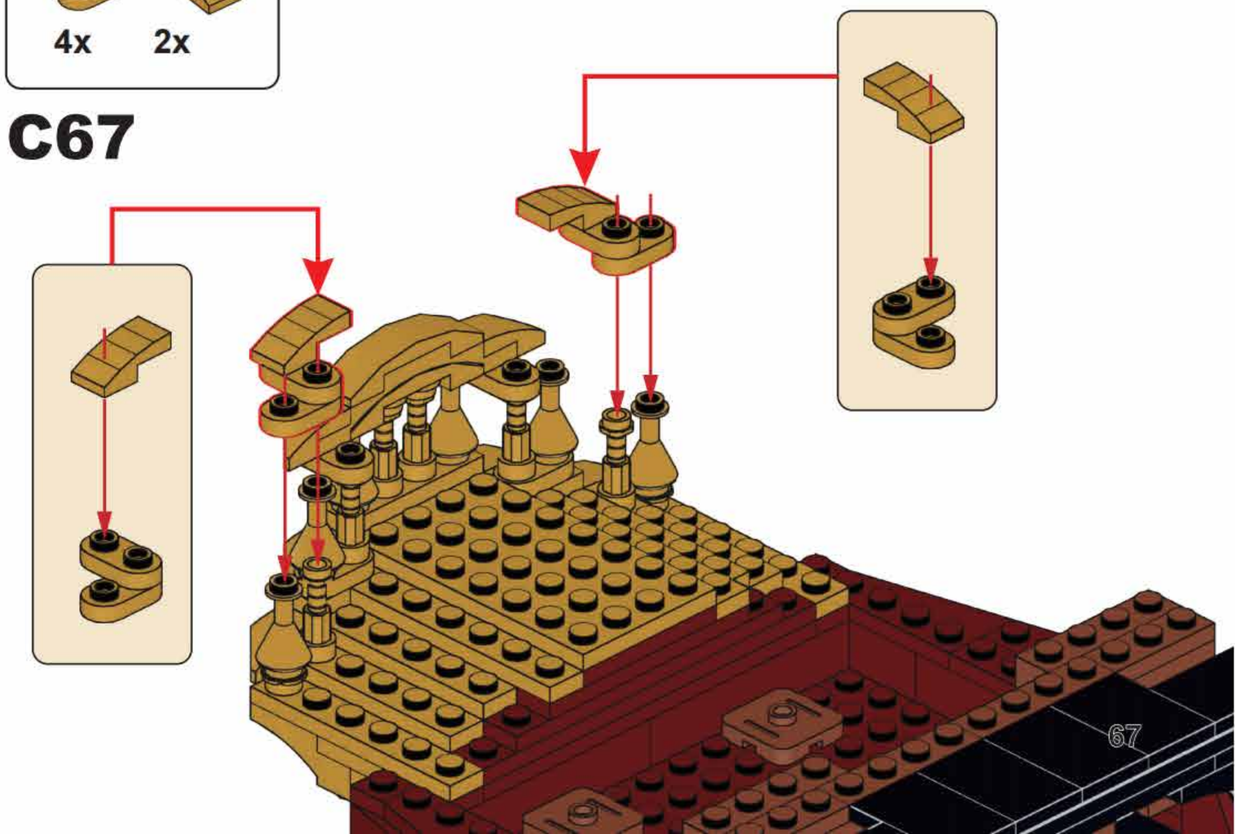

4

D

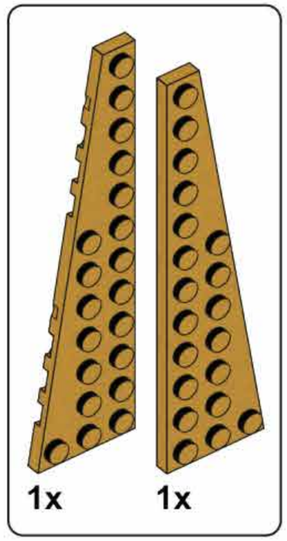

D1

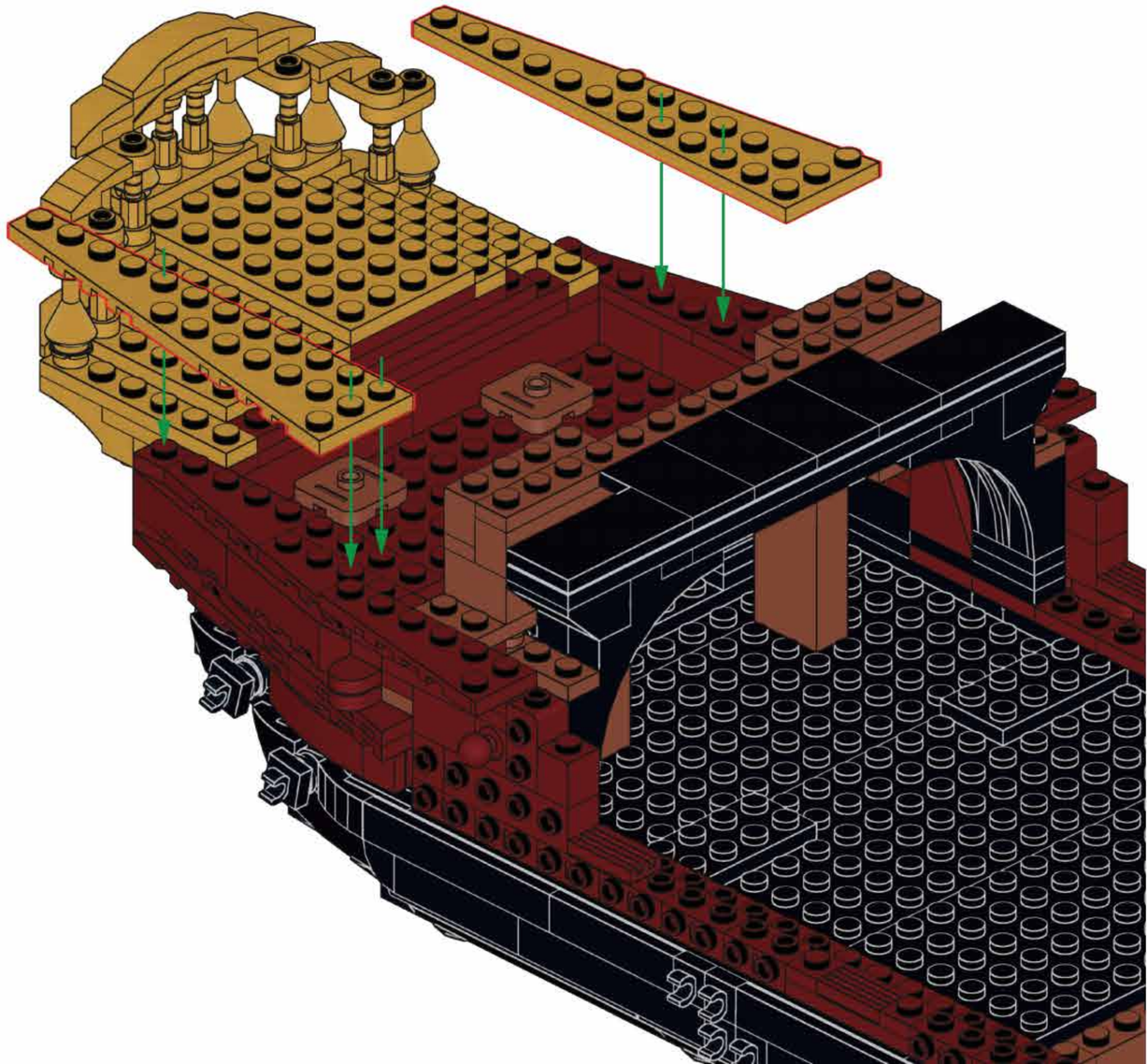

2x 2x 2x

D2

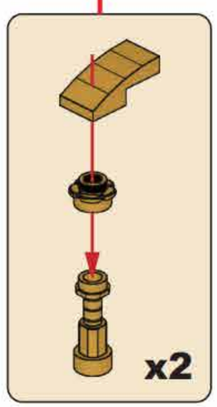

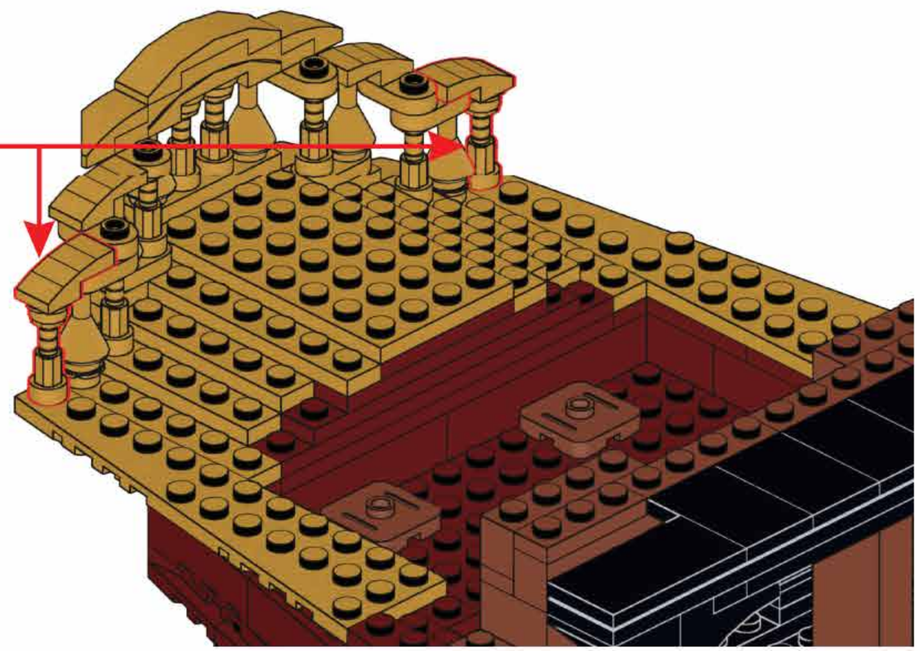

2x 2x 2x

D3

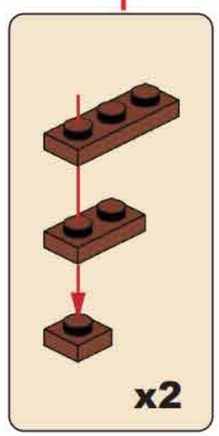

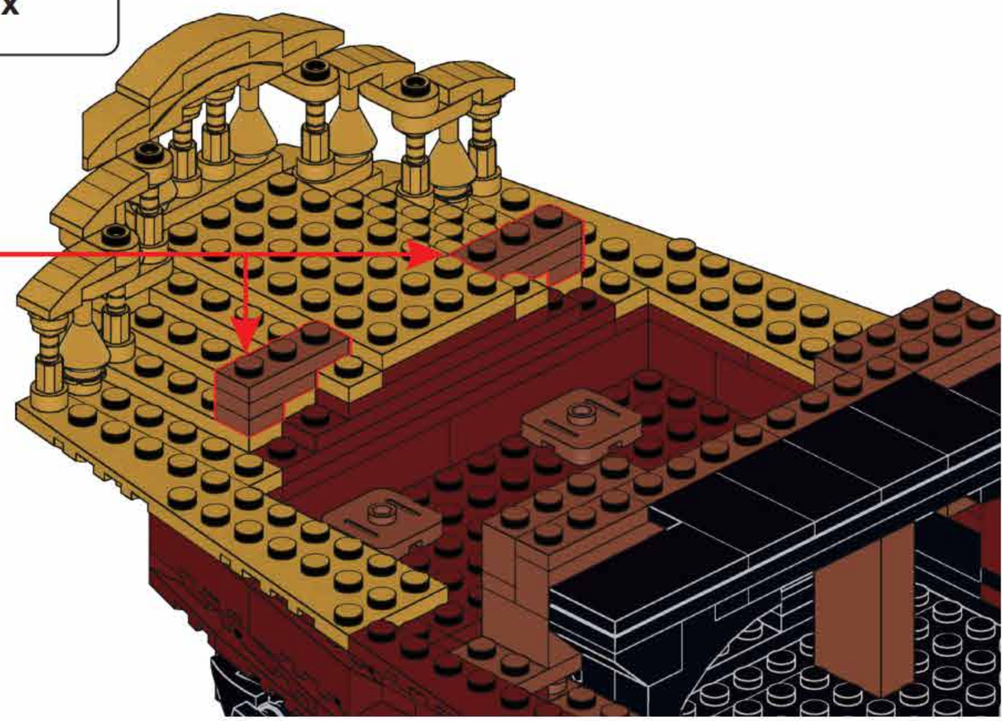

2x

D4

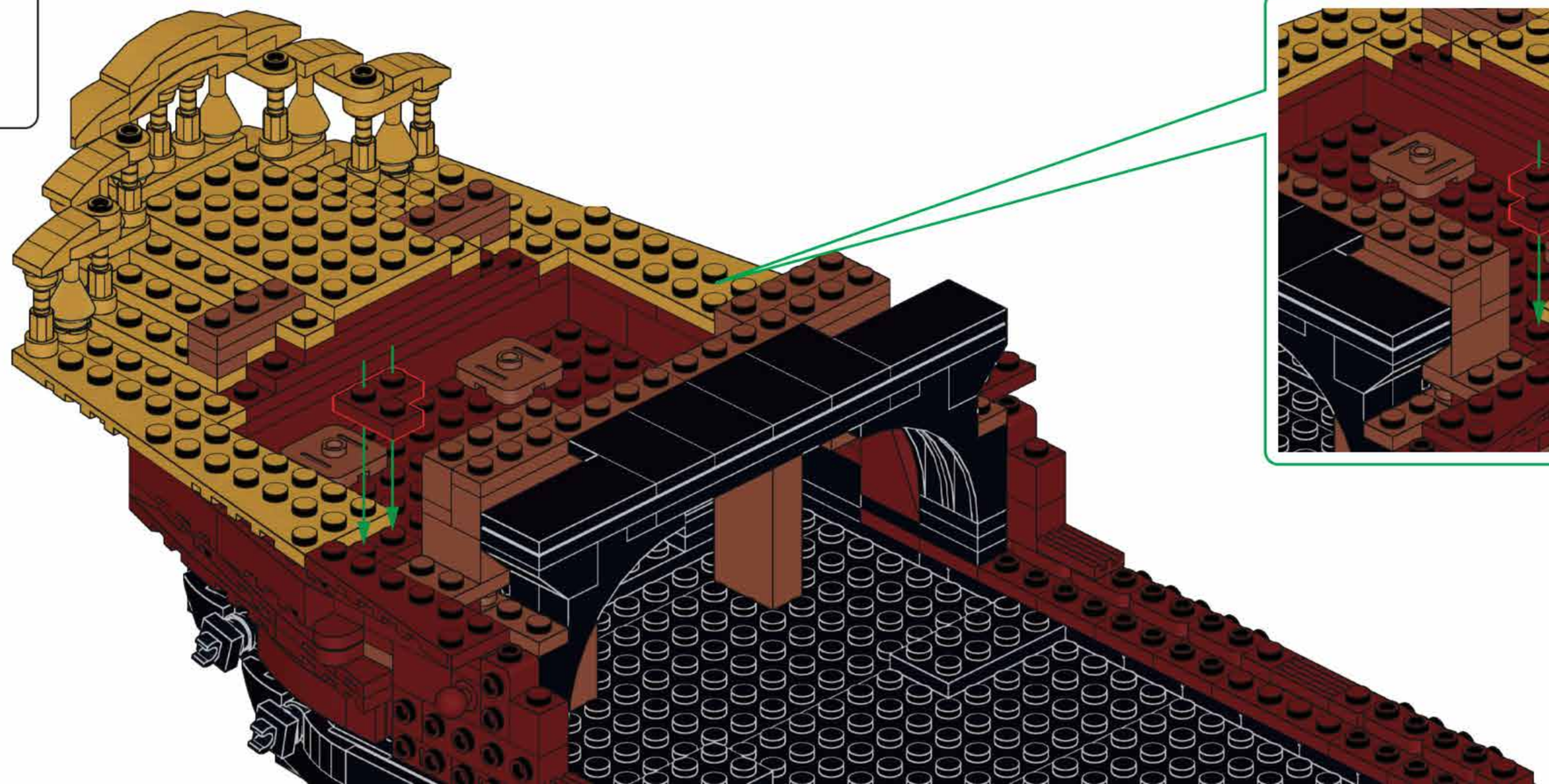

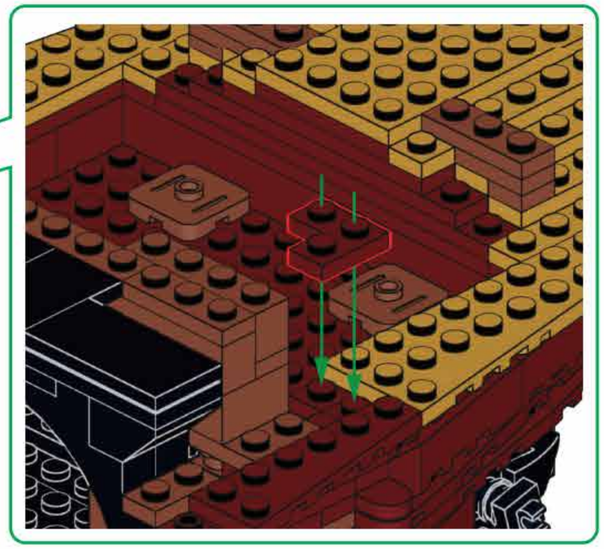

5x

D5

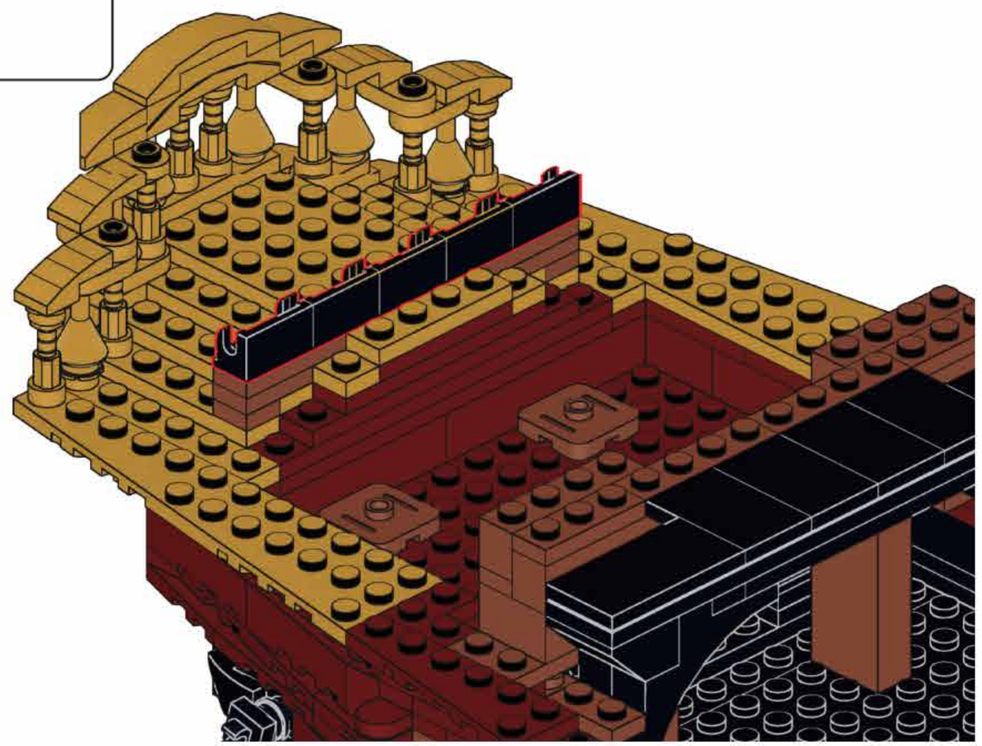

2x 2x

D6

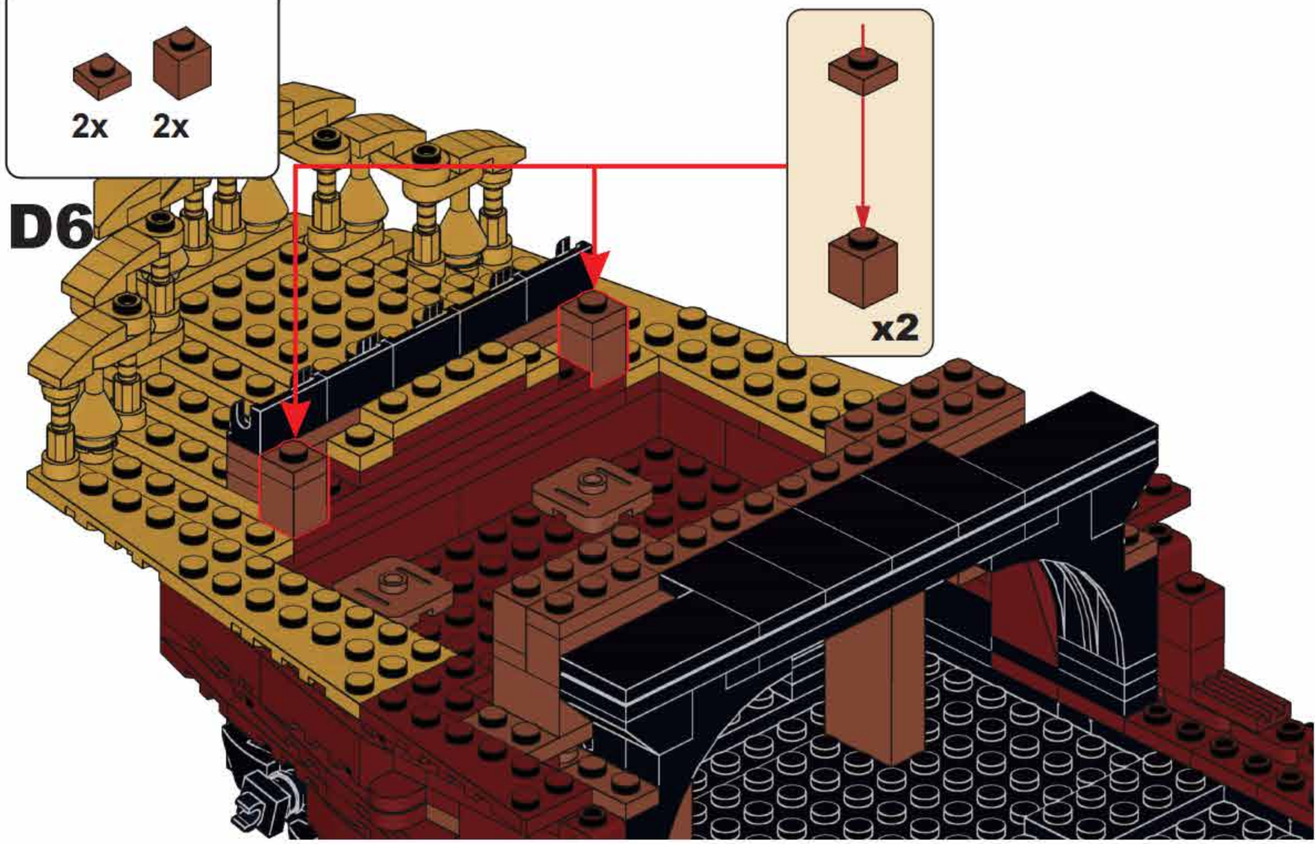

2x 1X3 2x 2X4

D7

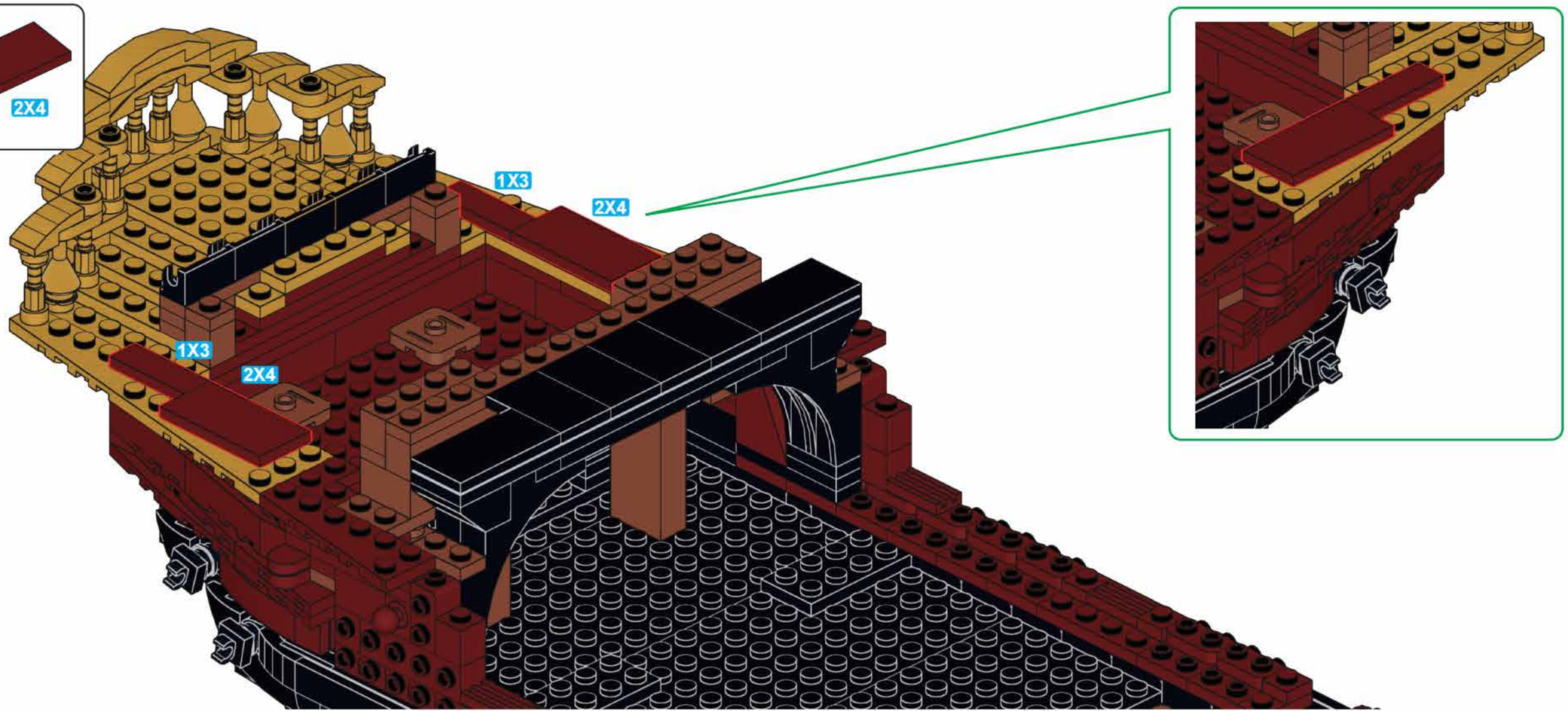

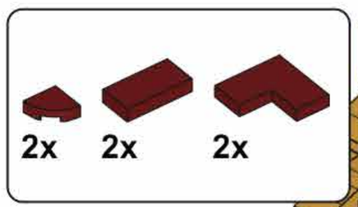

D8

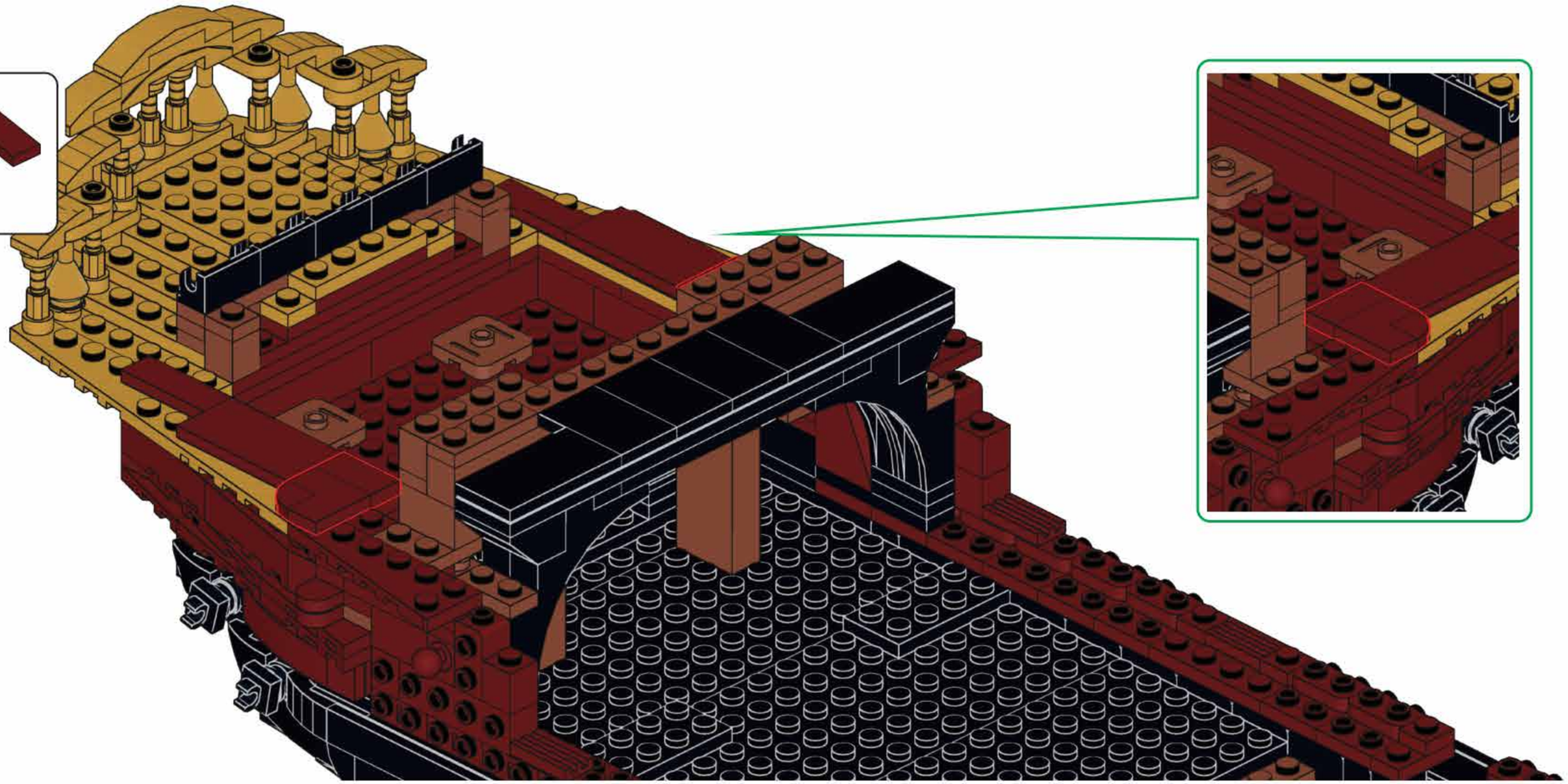

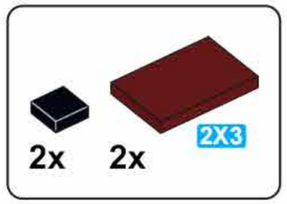

D9

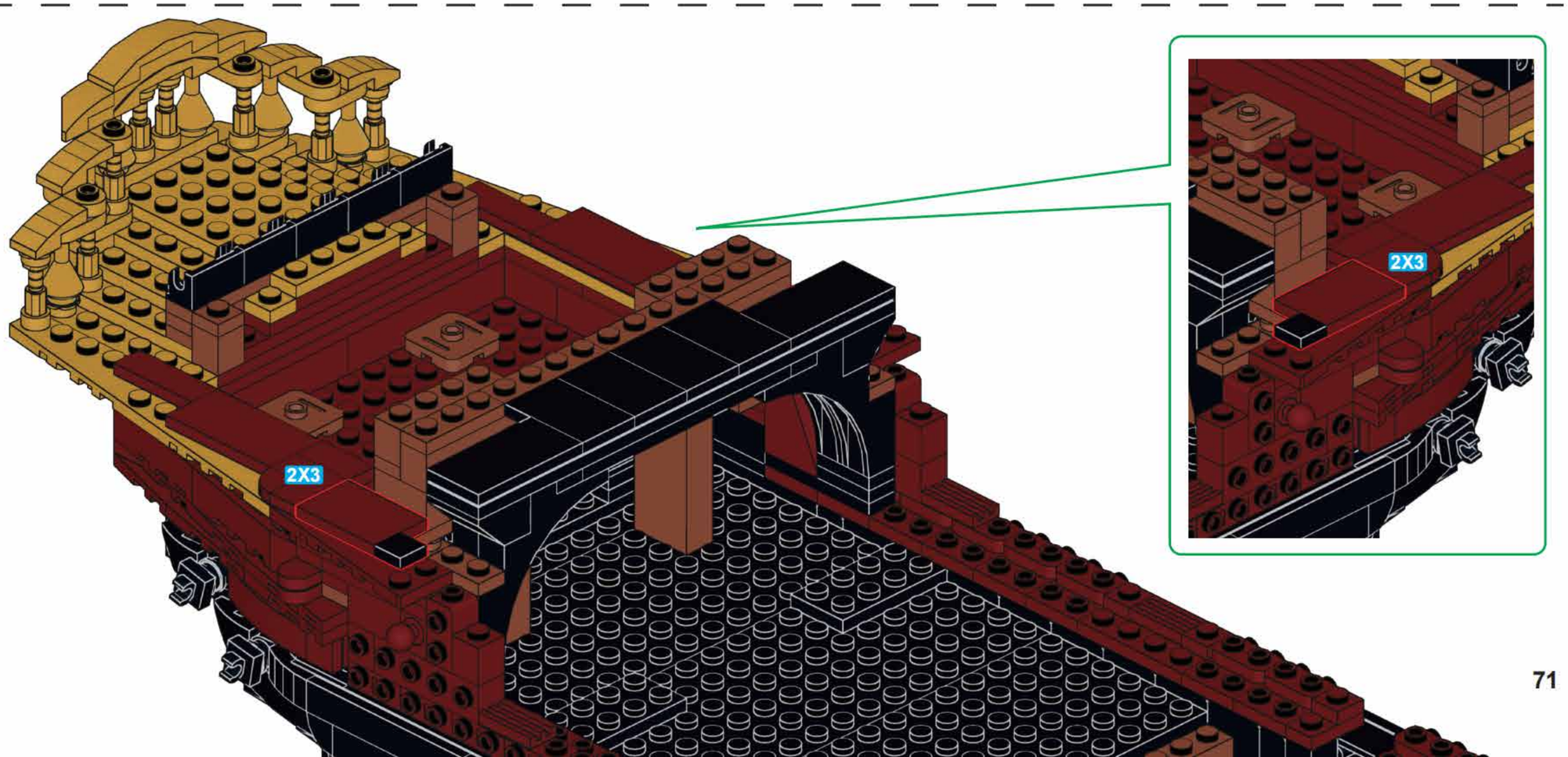

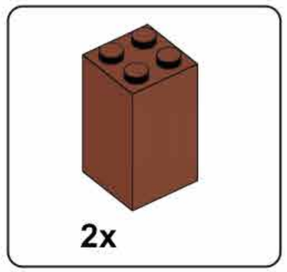

D10

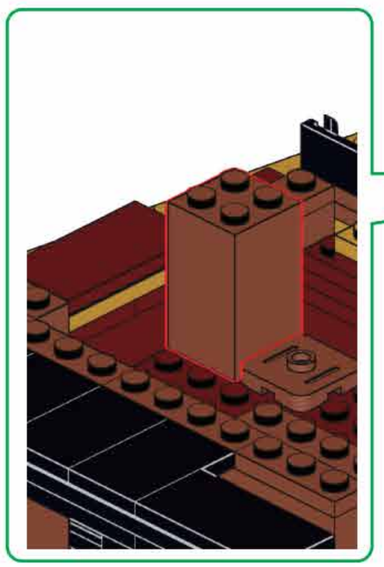

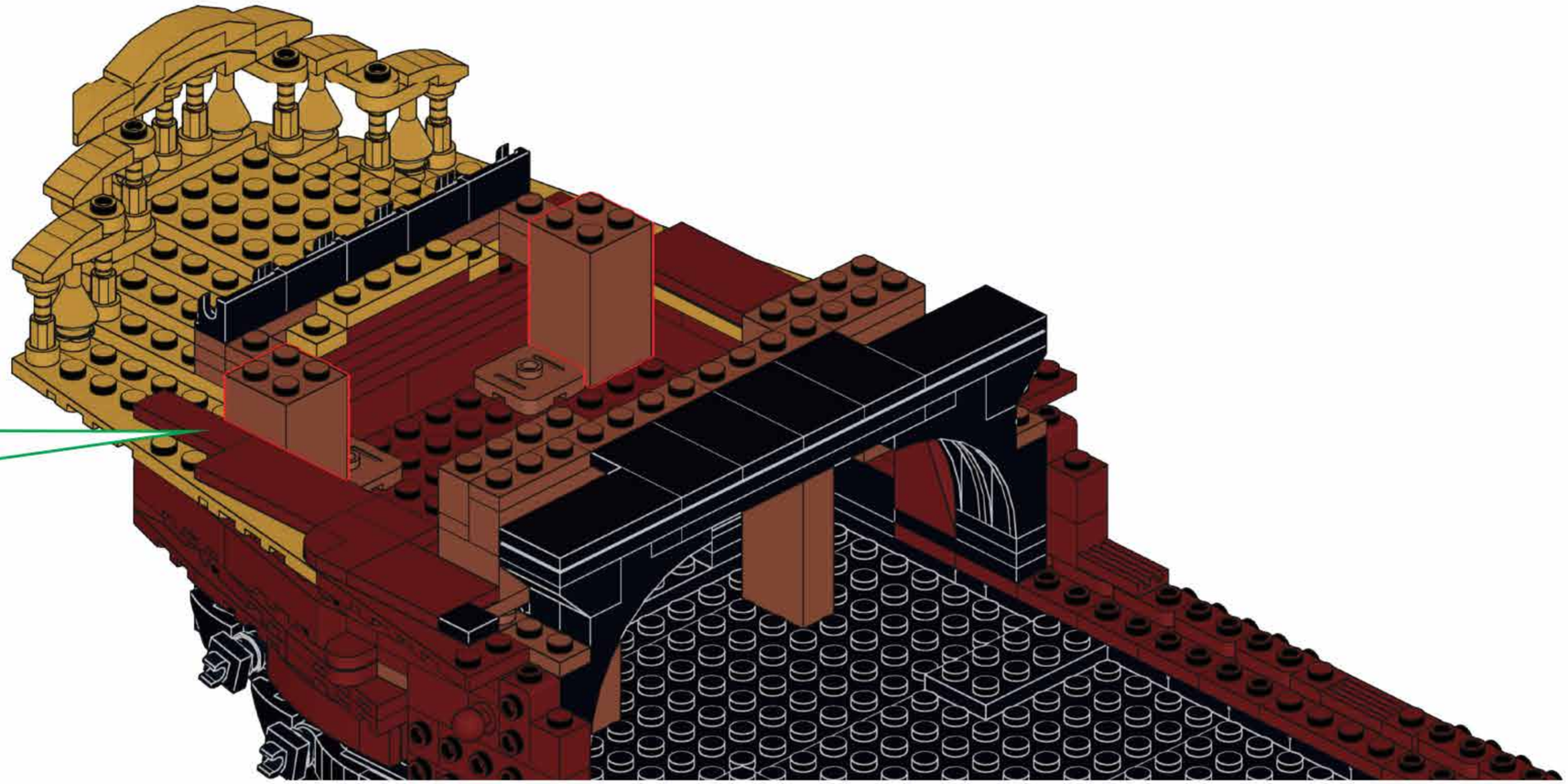

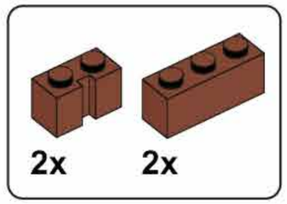

D11

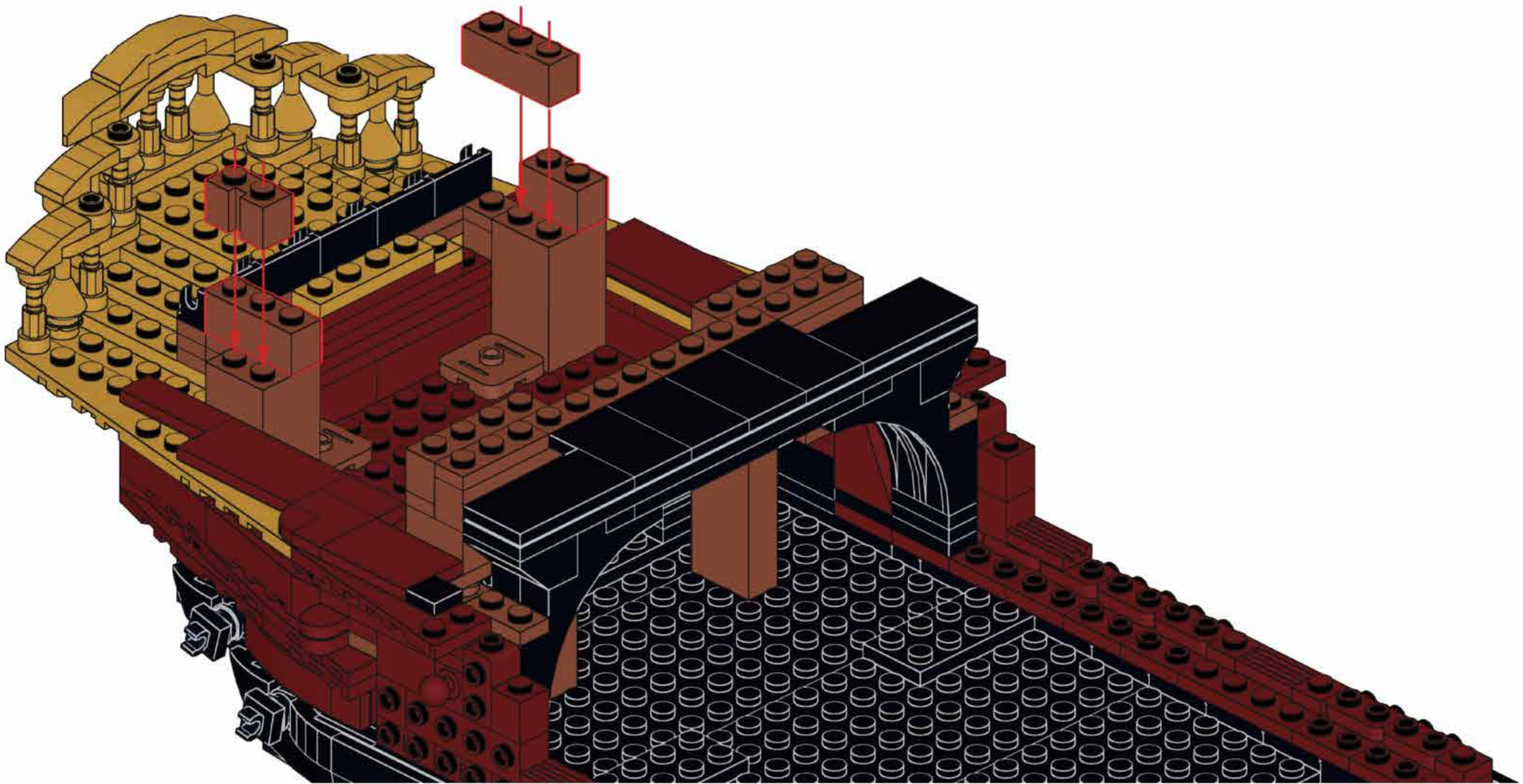

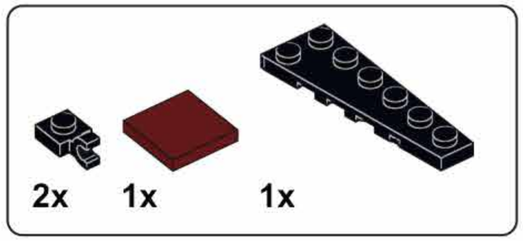

D12

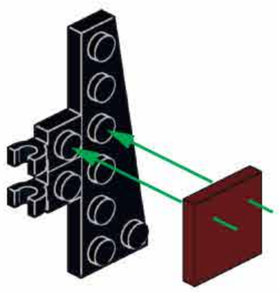

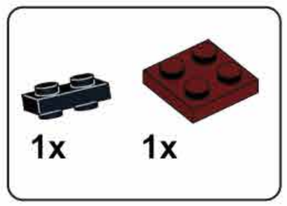

D13

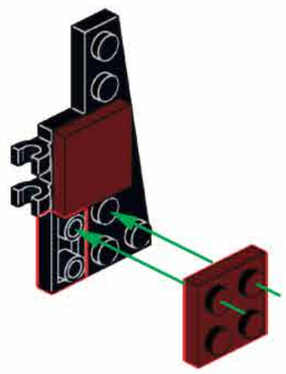

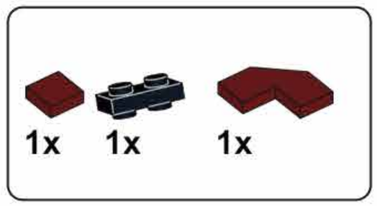

D14

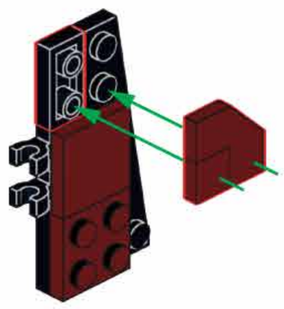

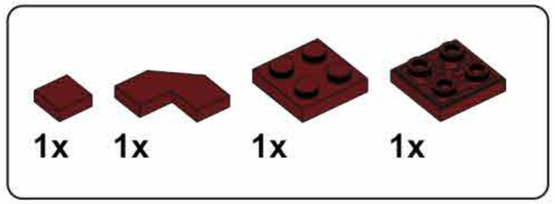

D15

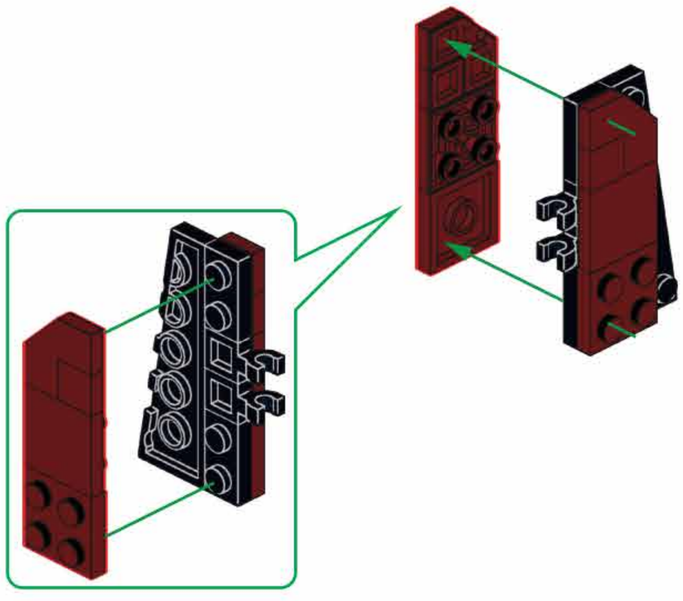

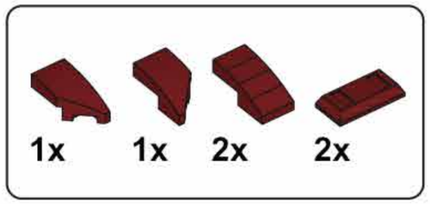

D16

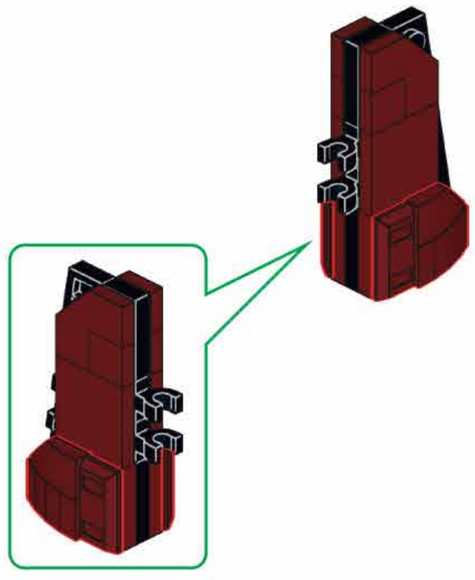

D17

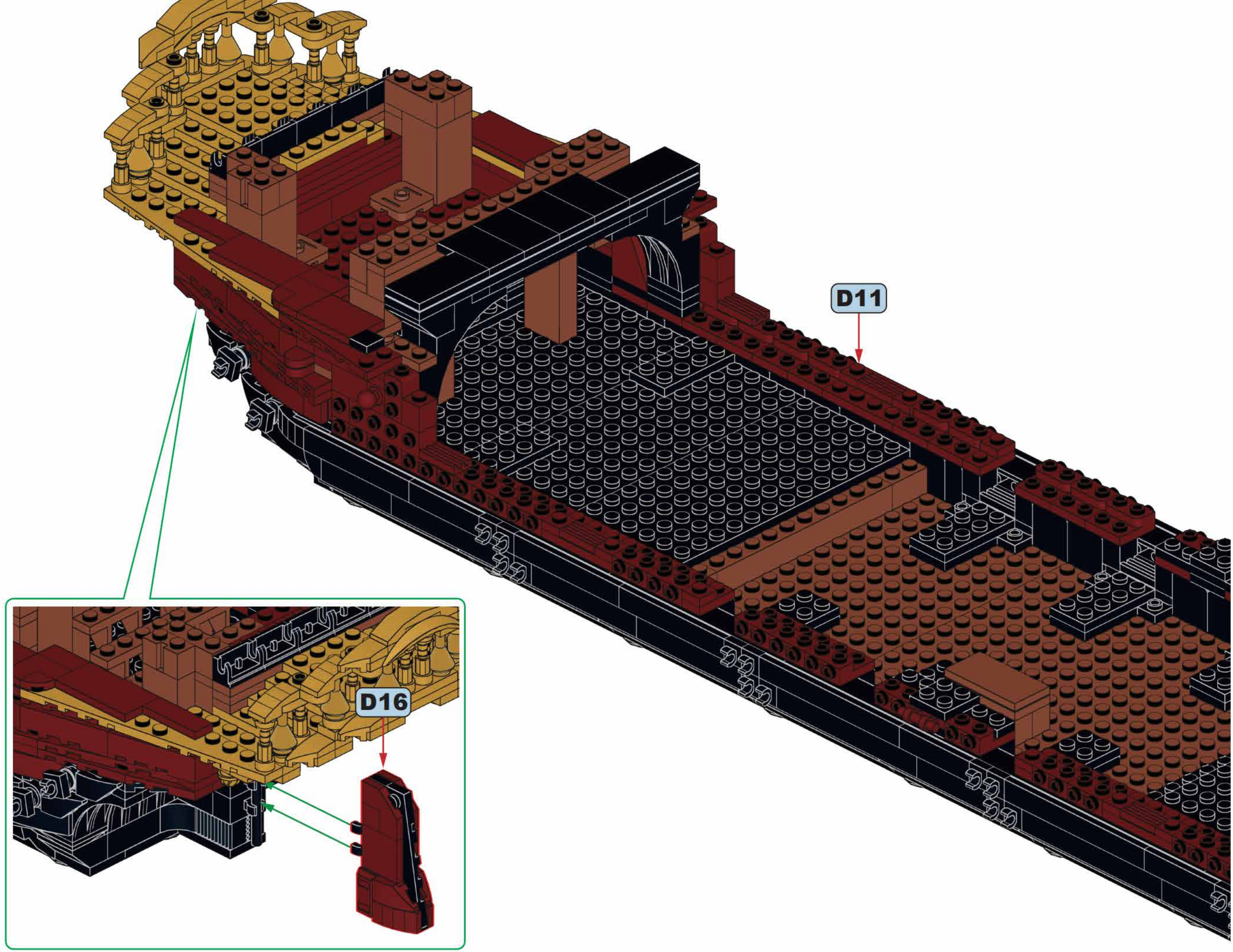

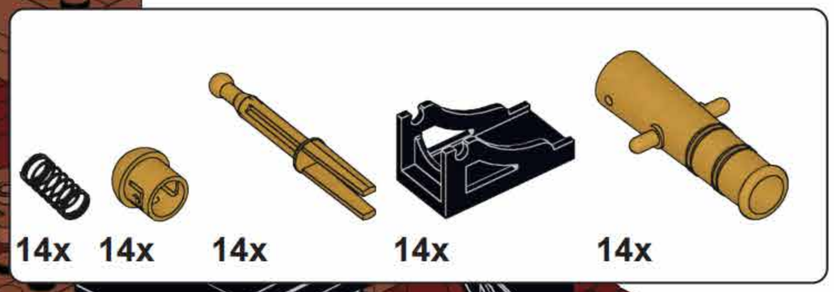

D18

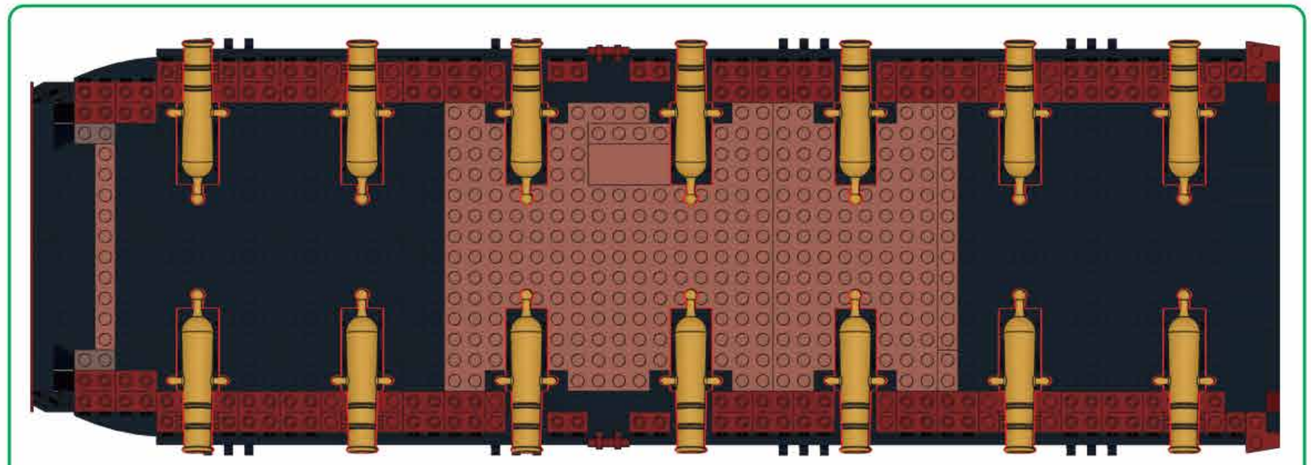

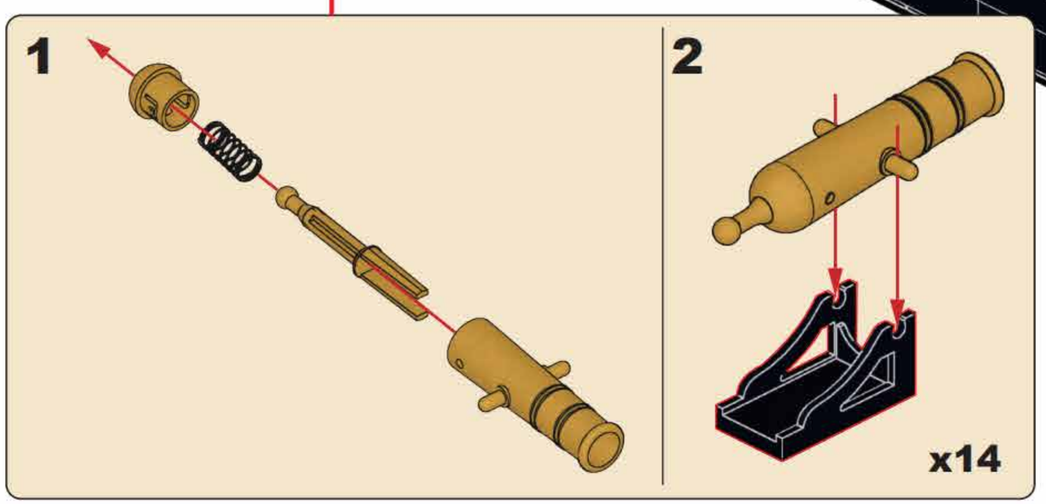

2x 2x

D19

2x 4x

D20

4x 2x 2x 2x 4x

D21

1

2

x2

2x 1X3 2x

D22

1X3

1X3

2x 2x

D23

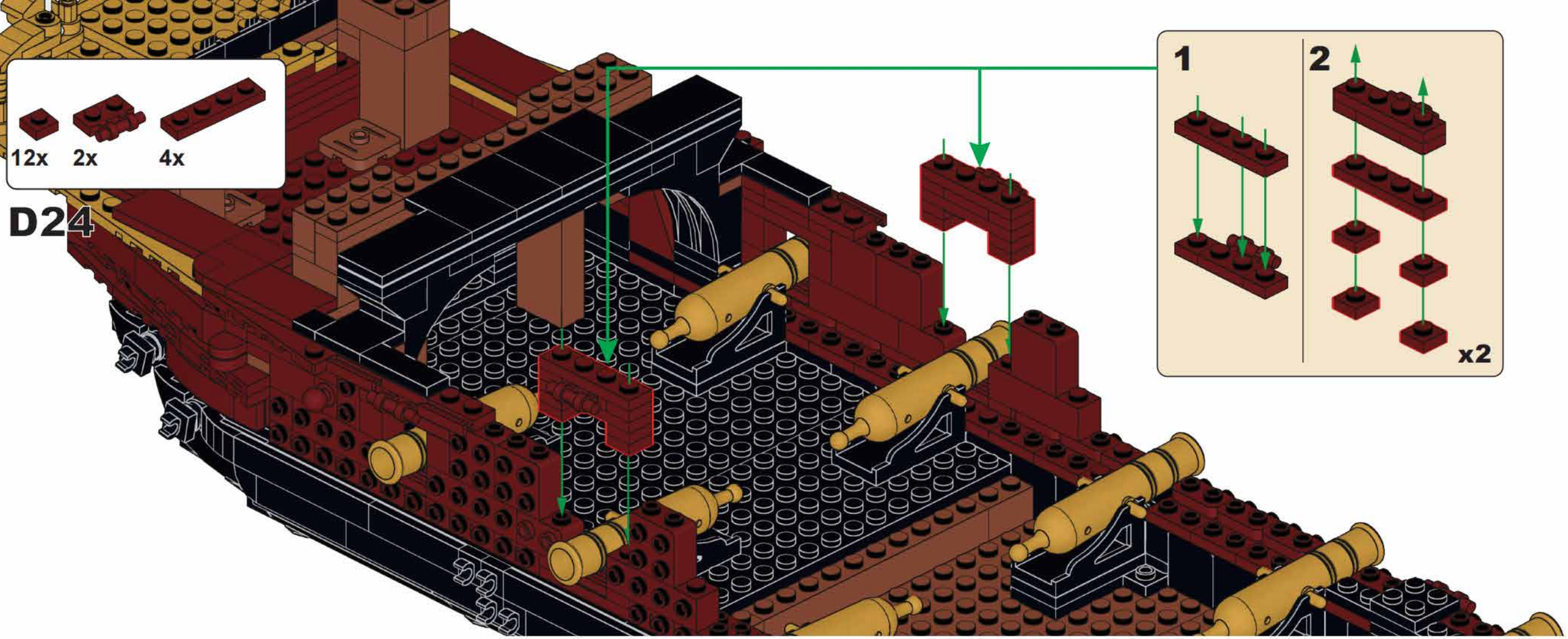
12x
2x
4x
D24
1
2
x2

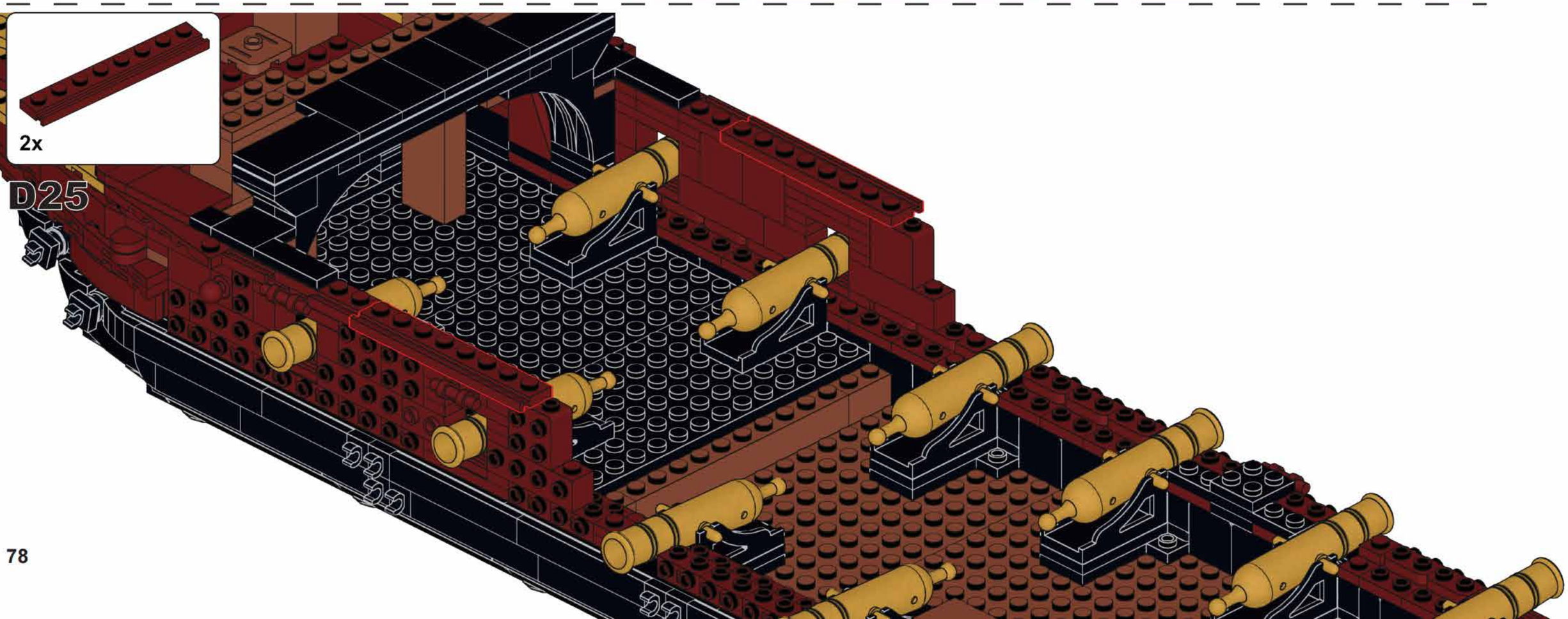
2x
D25

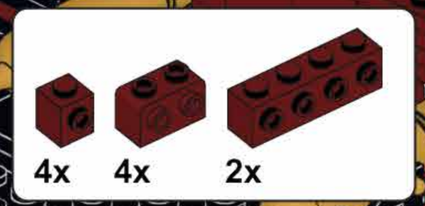

D26

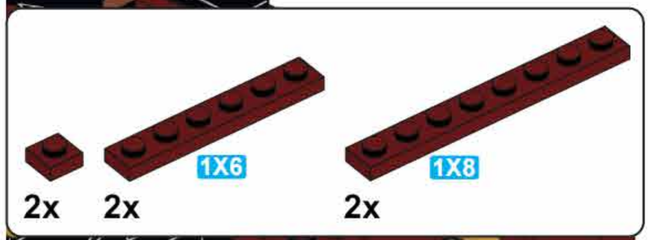

D27

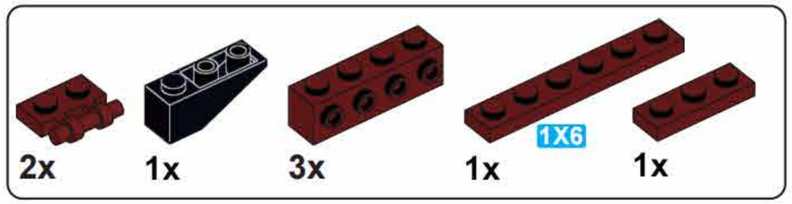

D28

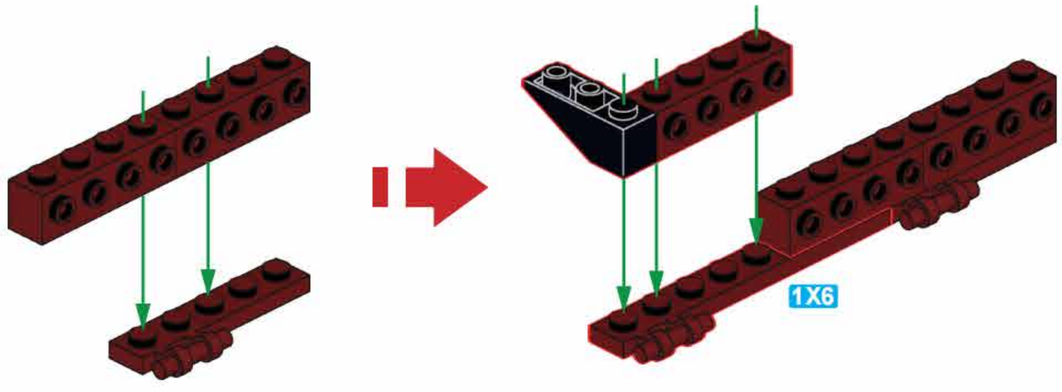

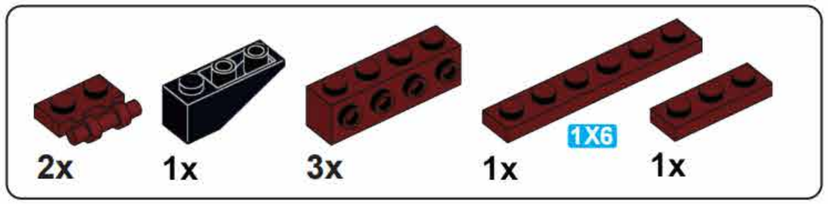

D29

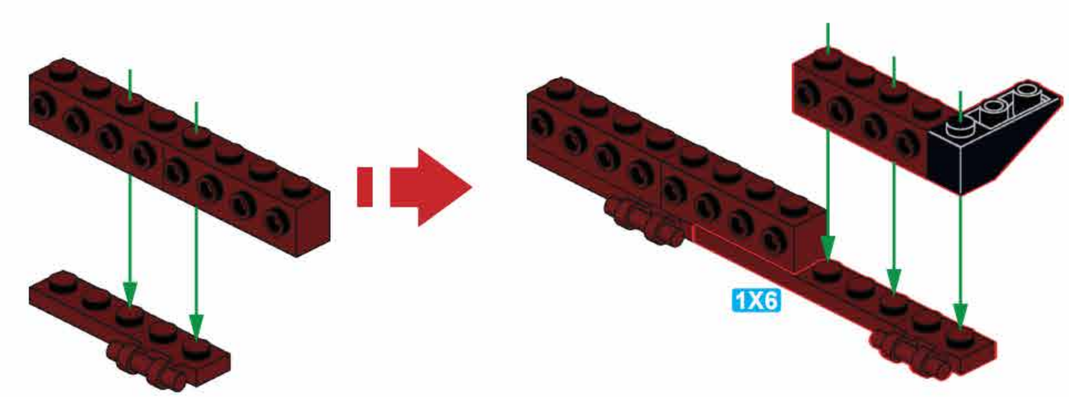

D30

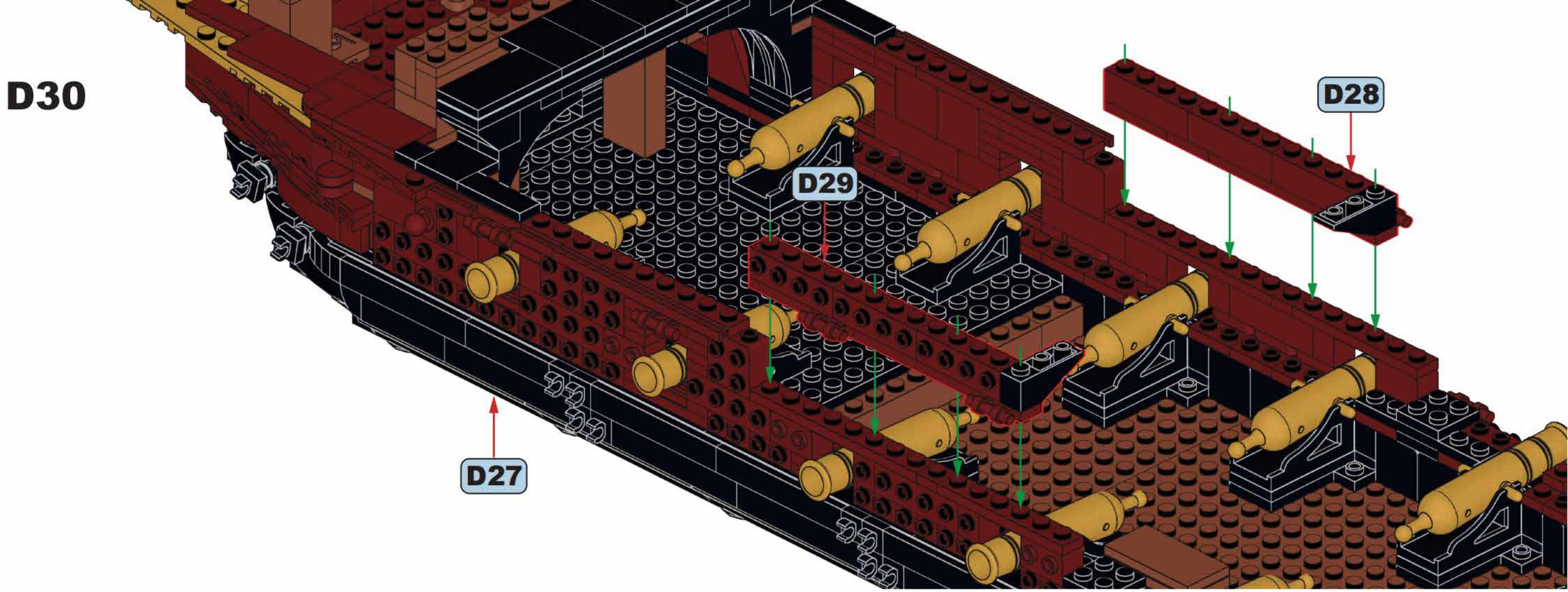

D31

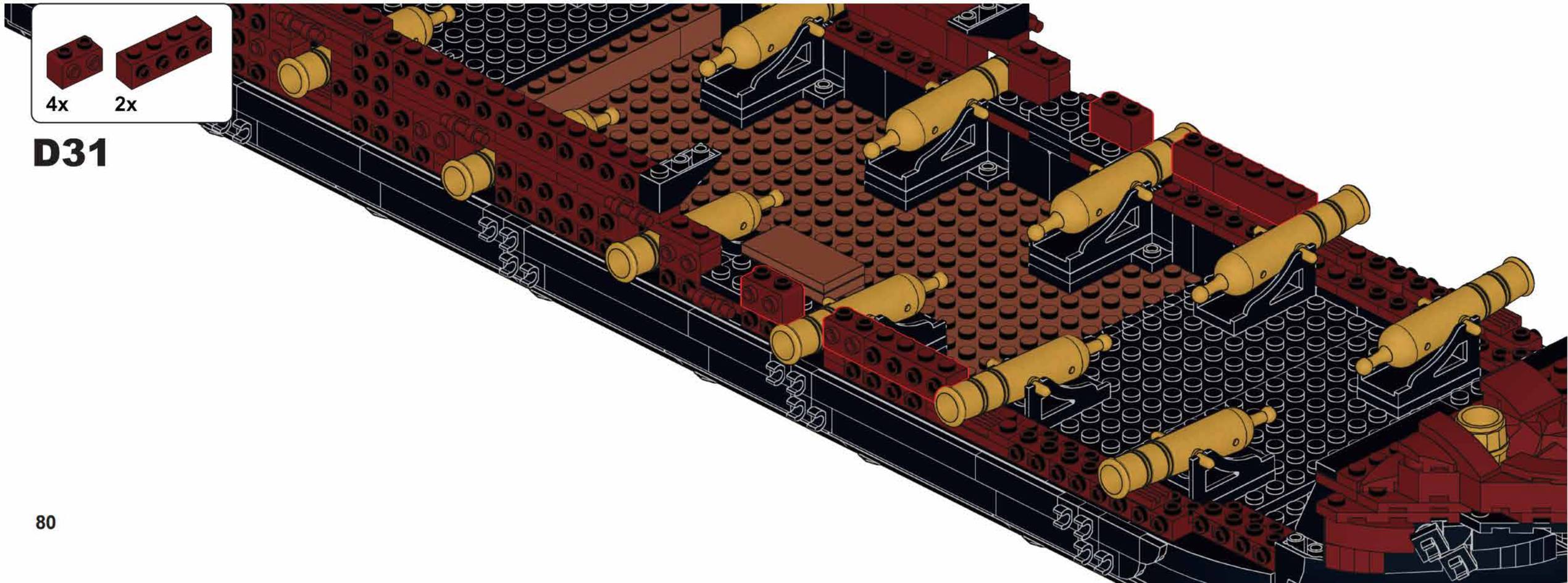

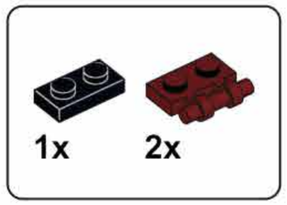

D32

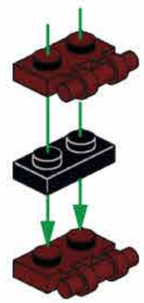

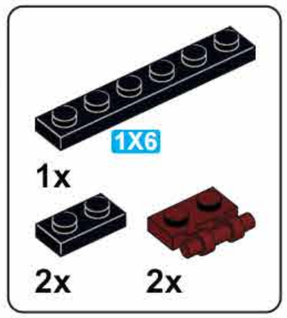

D33

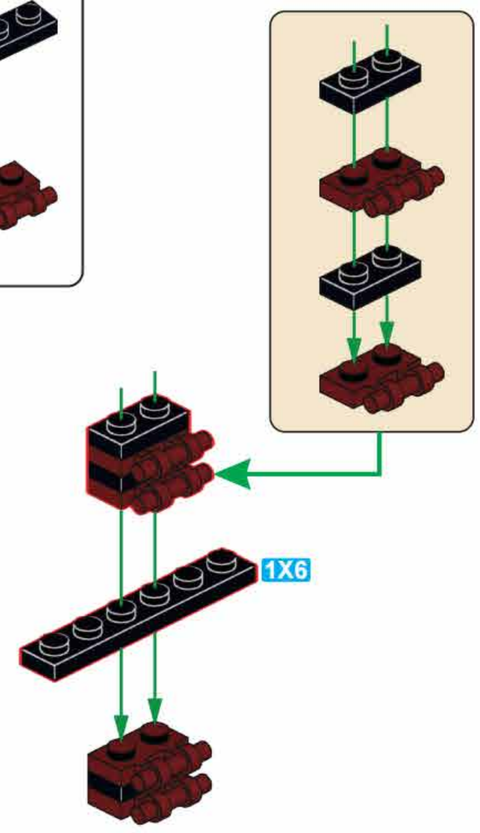

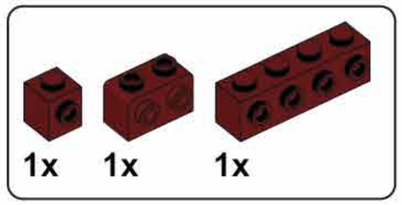

D34

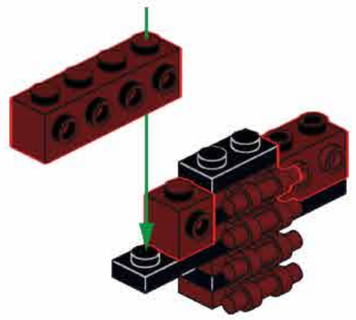

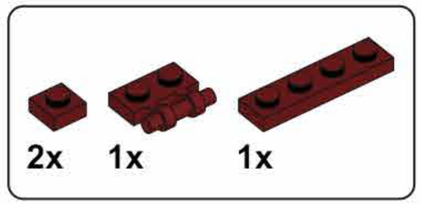

D35

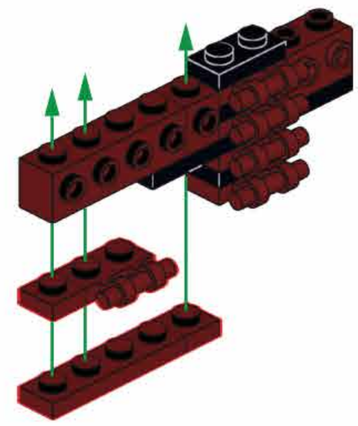

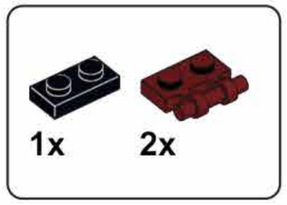

D36

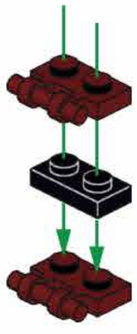

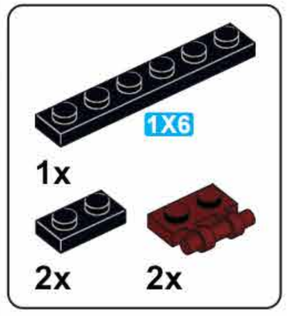

D37

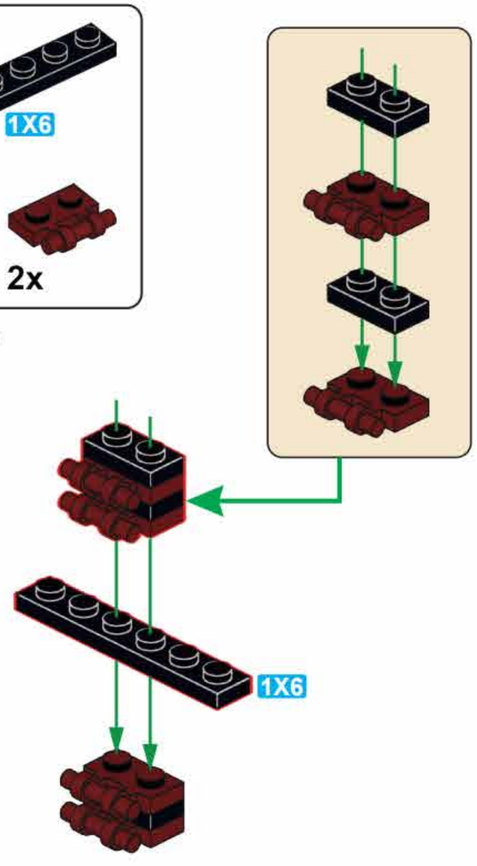

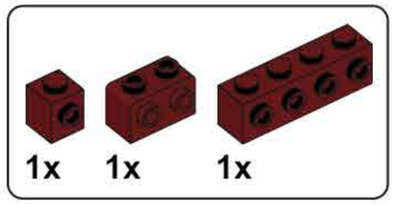

D38

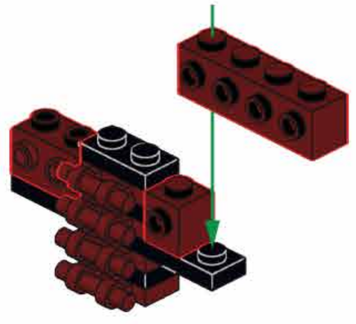

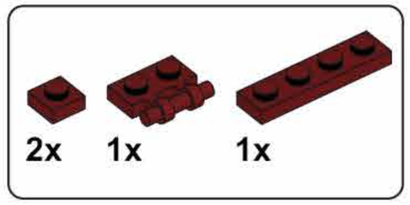

D39

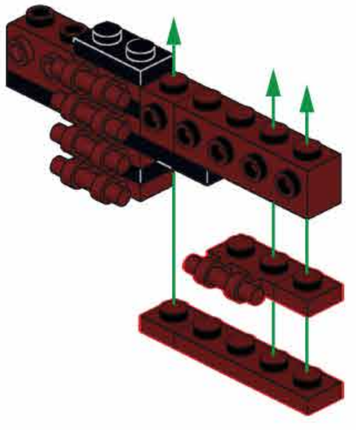

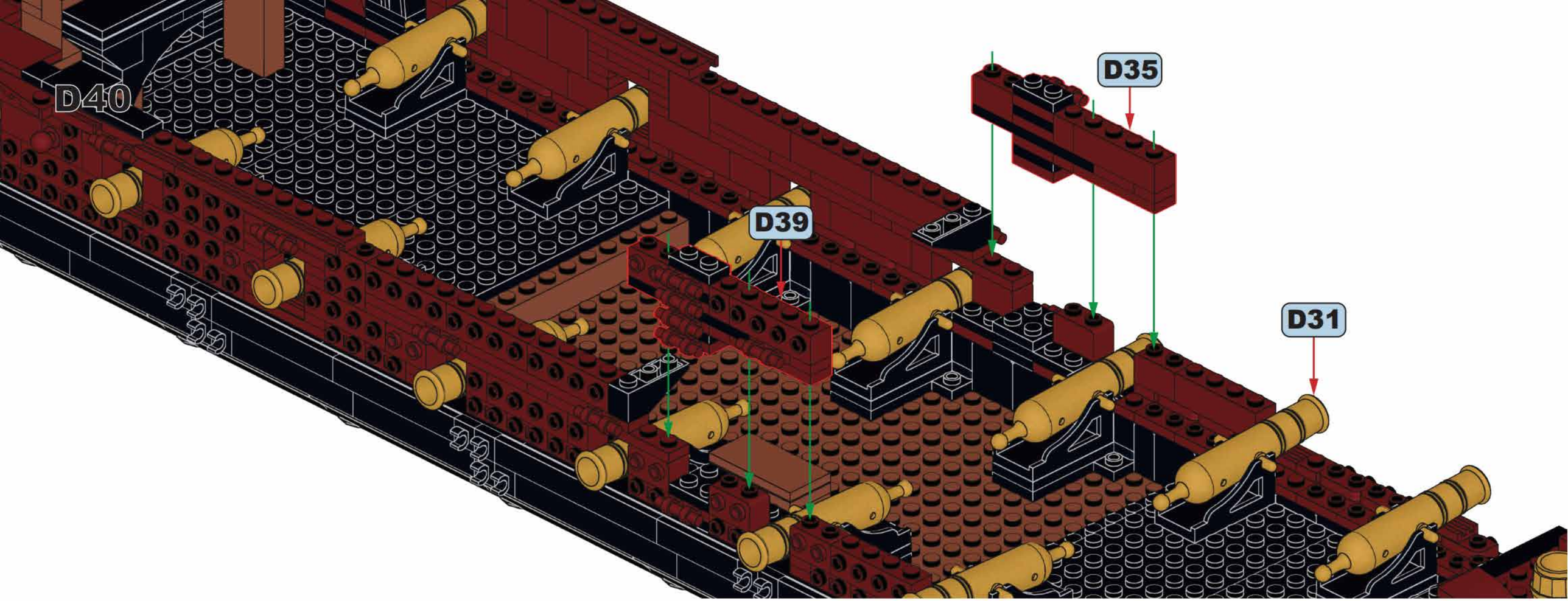

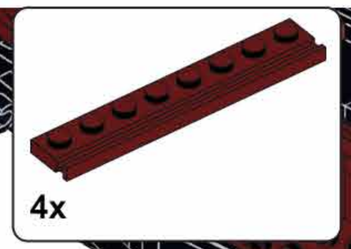

D41

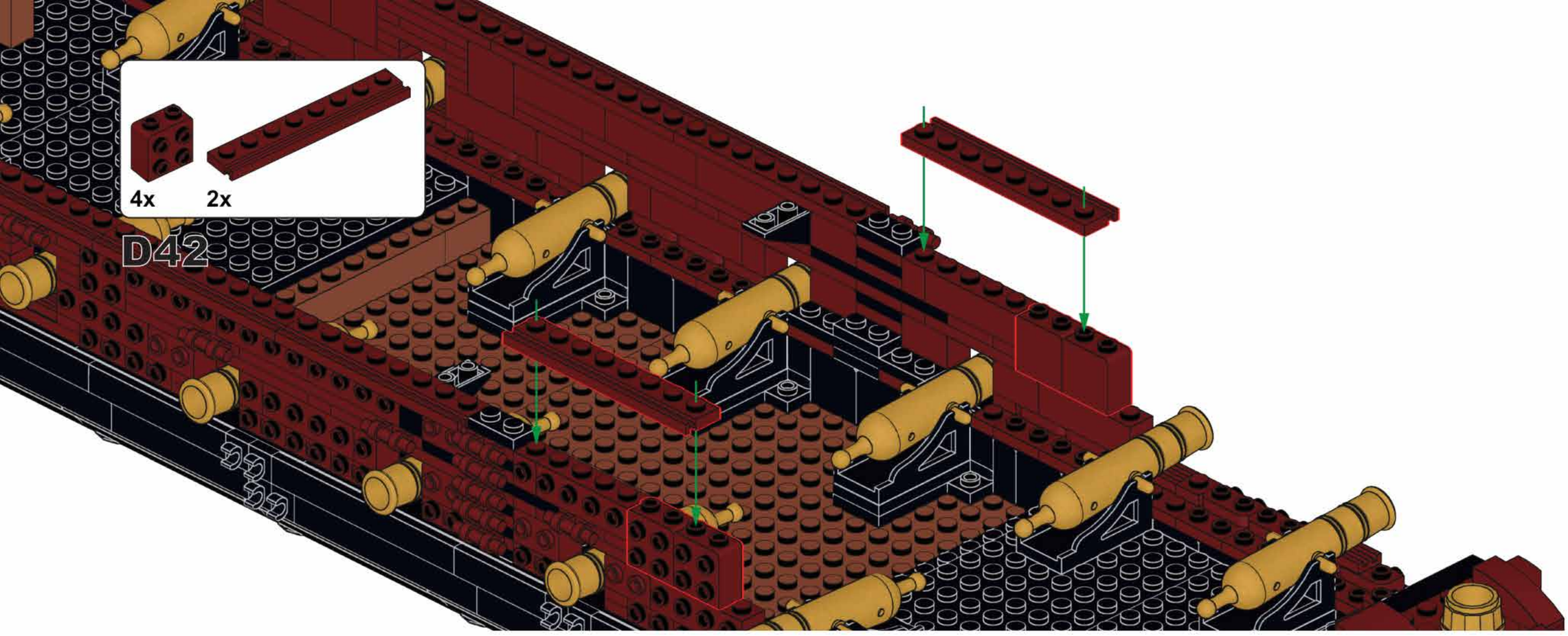

D42

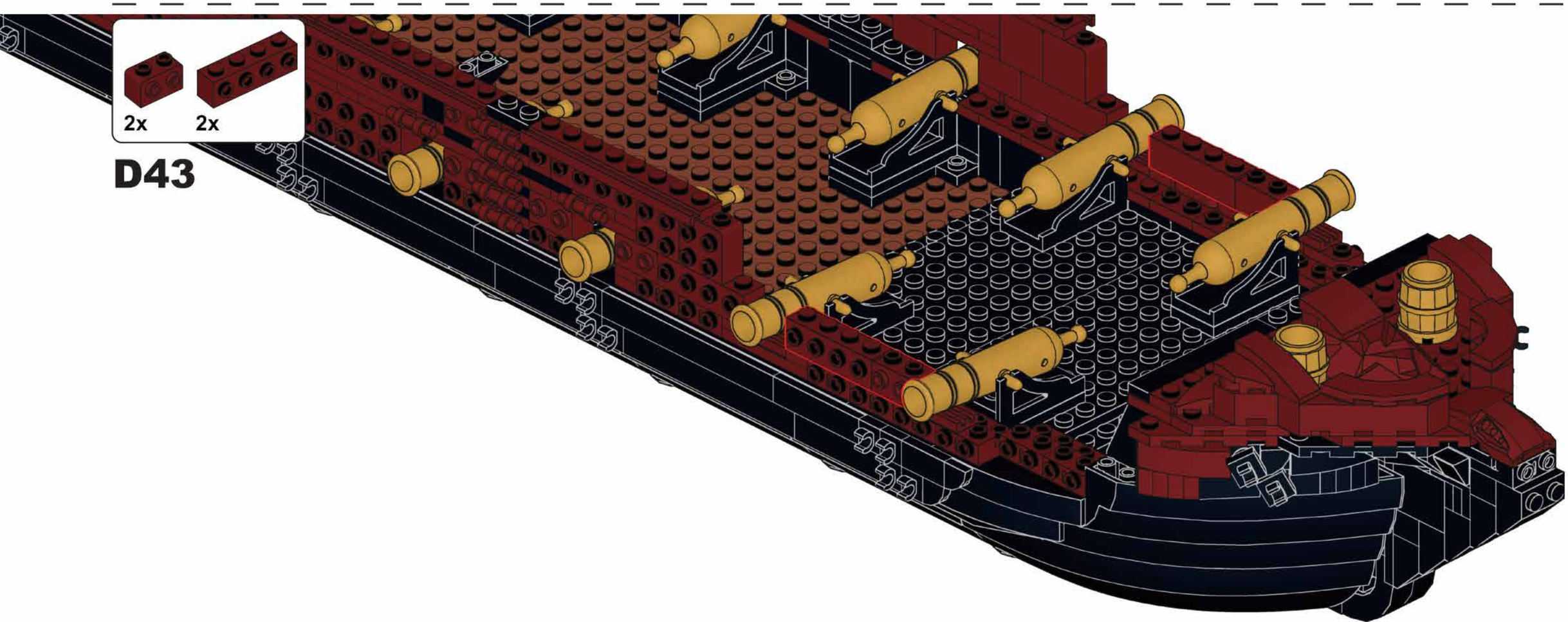

D43

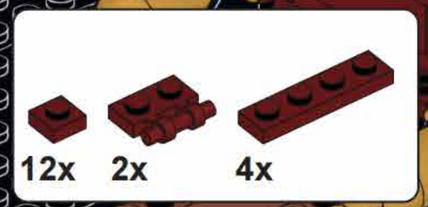

D44

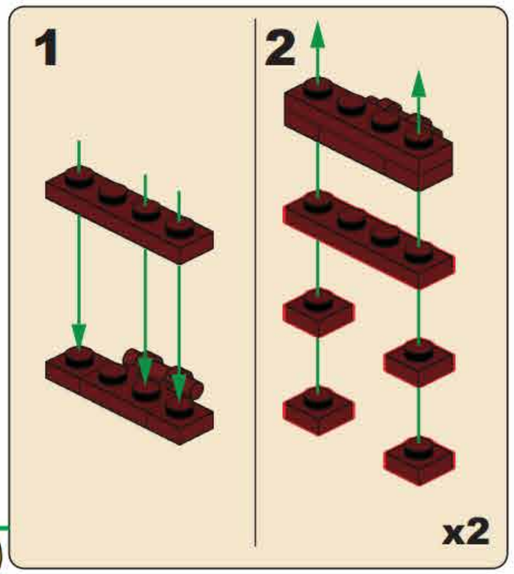

D45

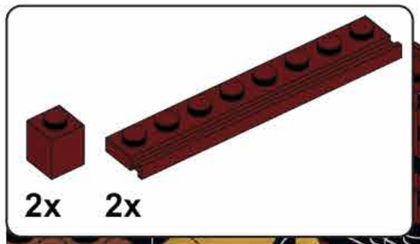

D46

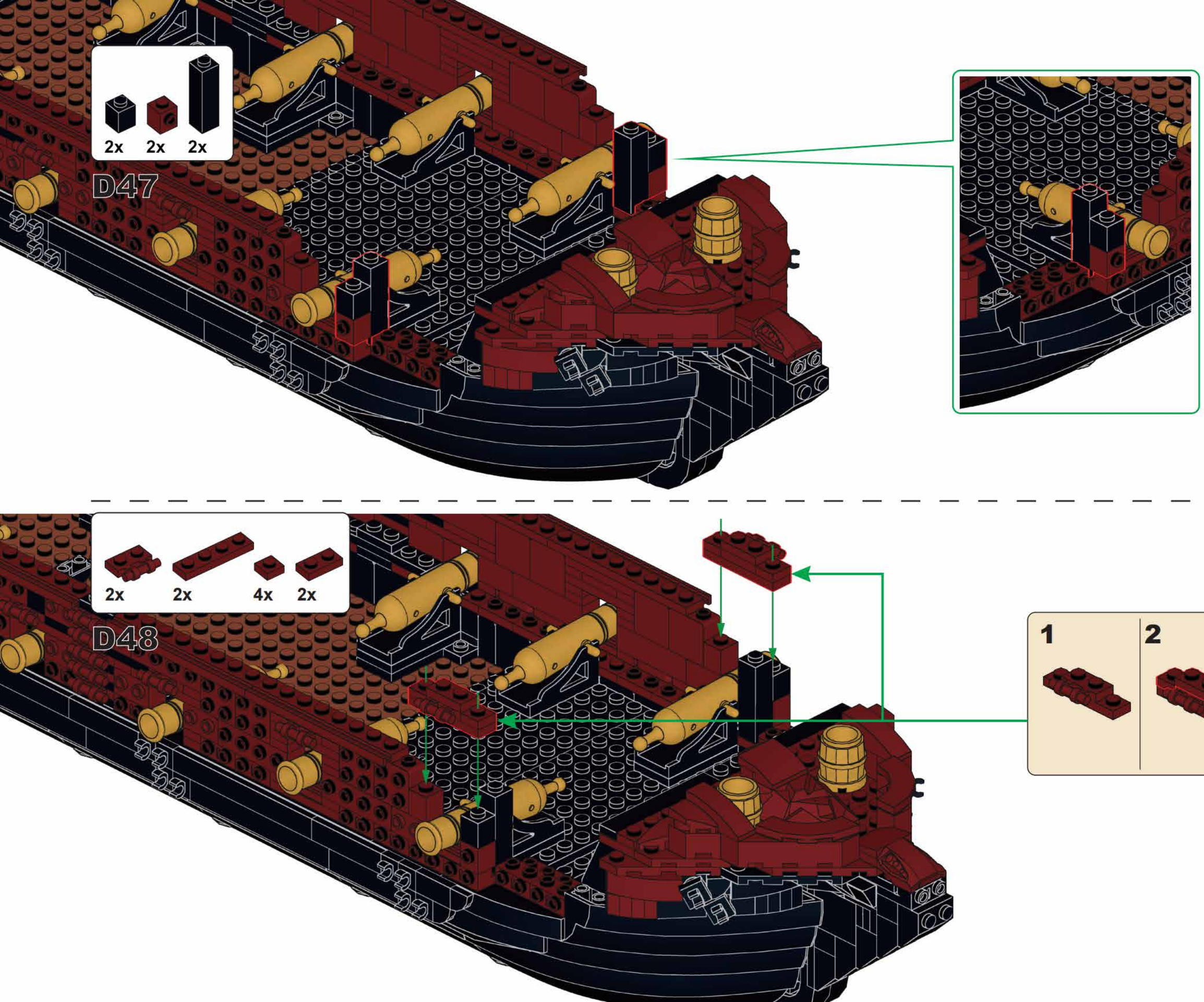
2x
2x
2x
D47
2x
2x
4x
2x
D48
1
2
x2

D49

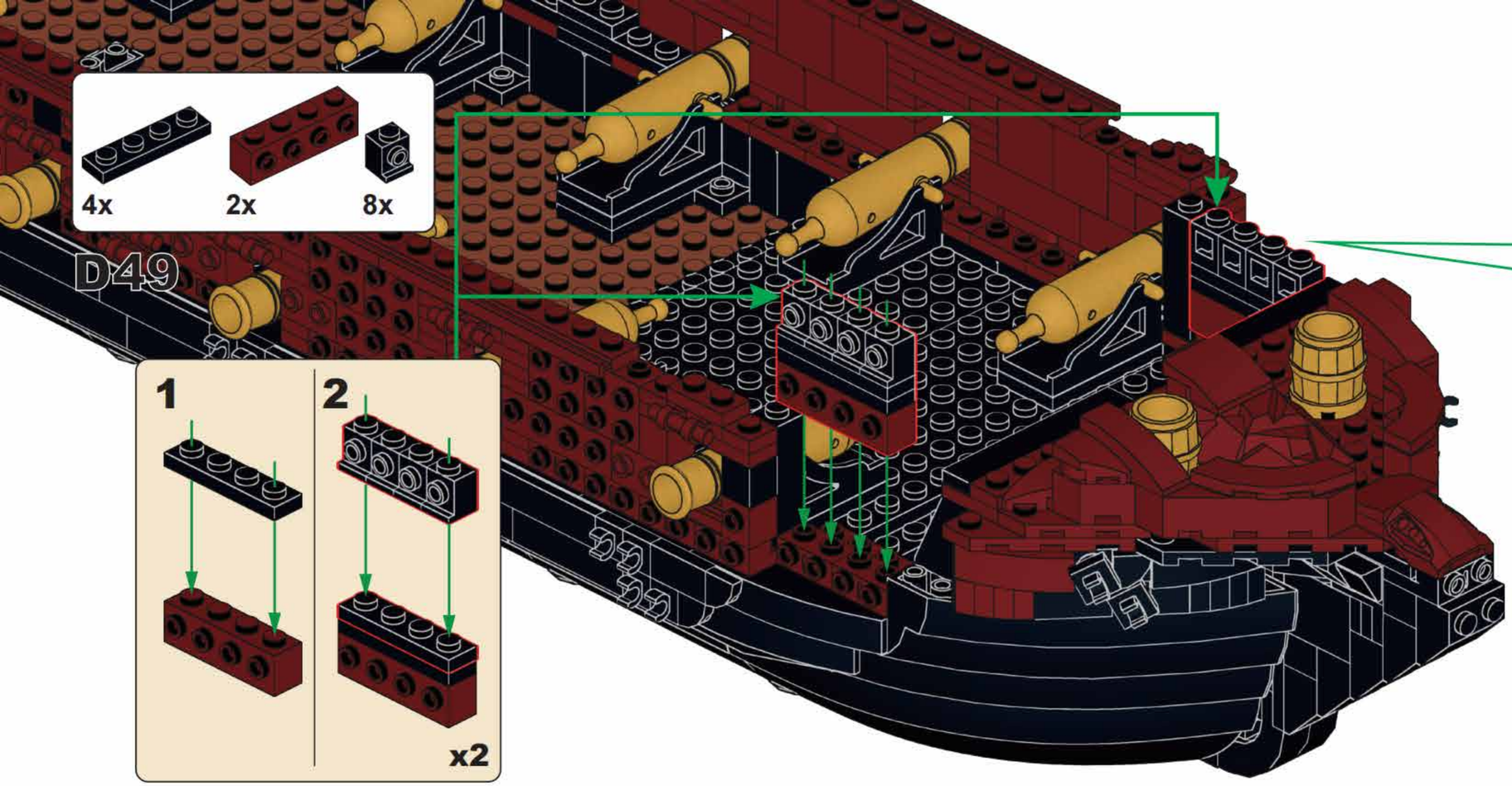

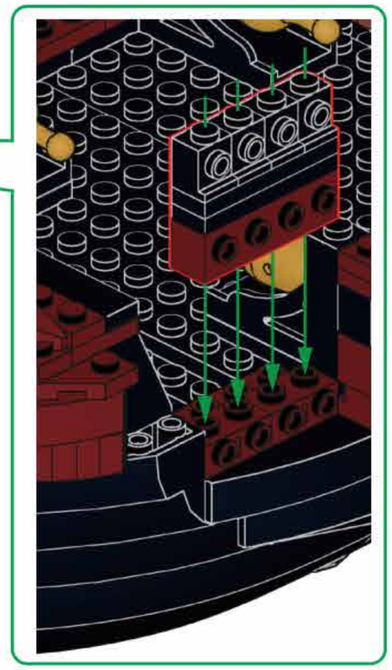

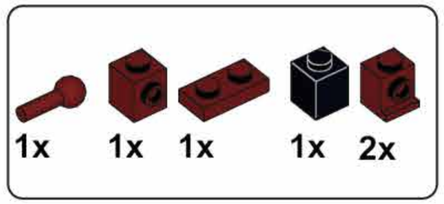

D50

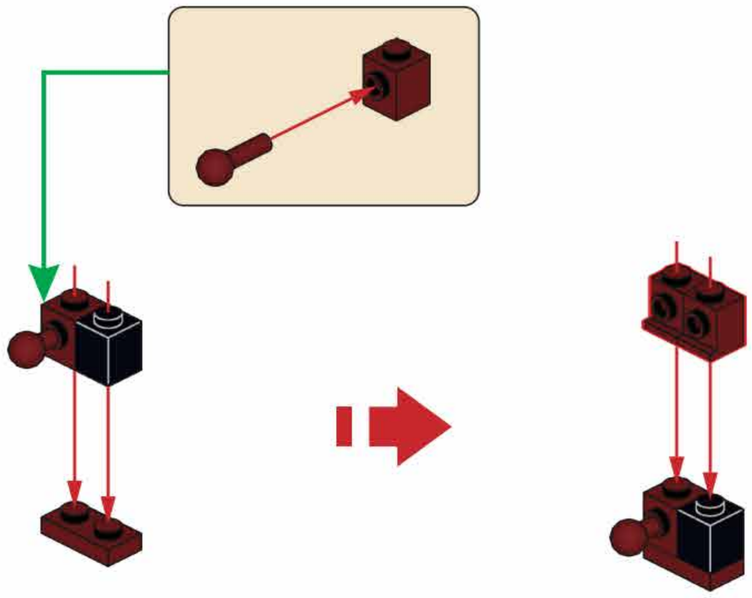

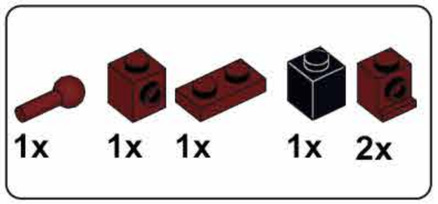

D51

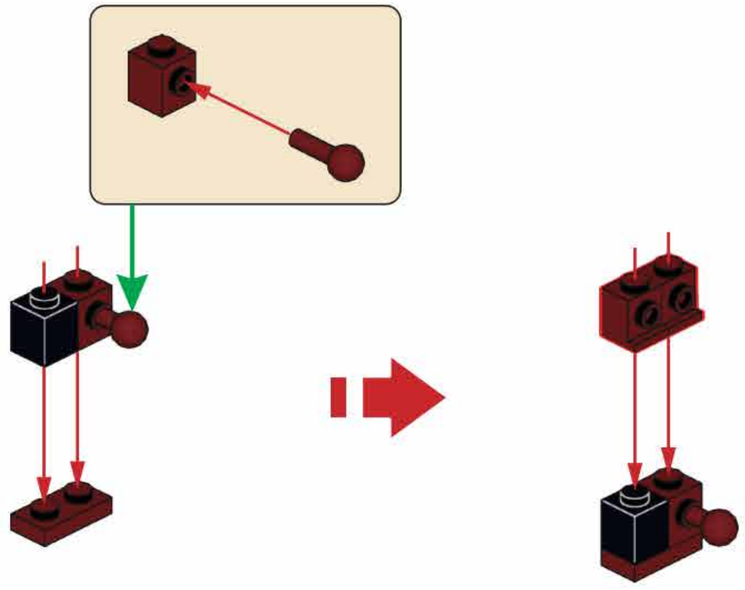

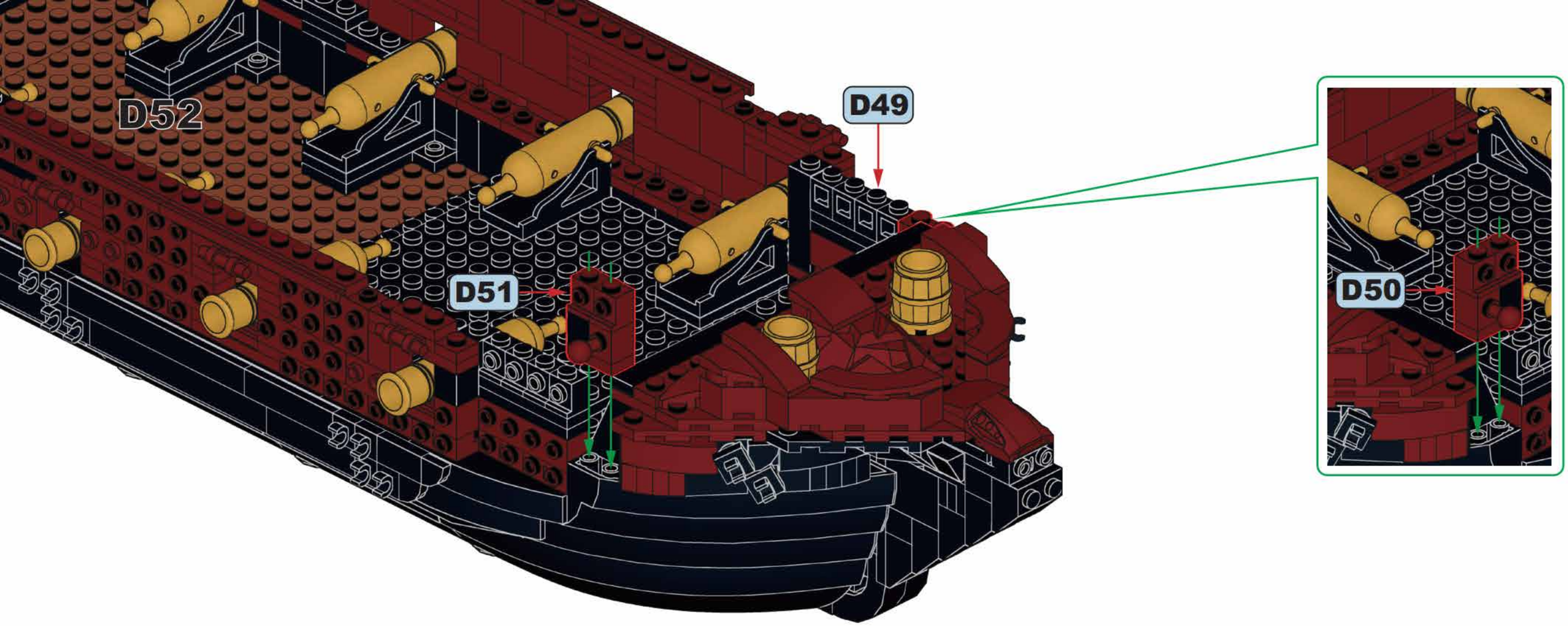
D52
D49
D51
D50

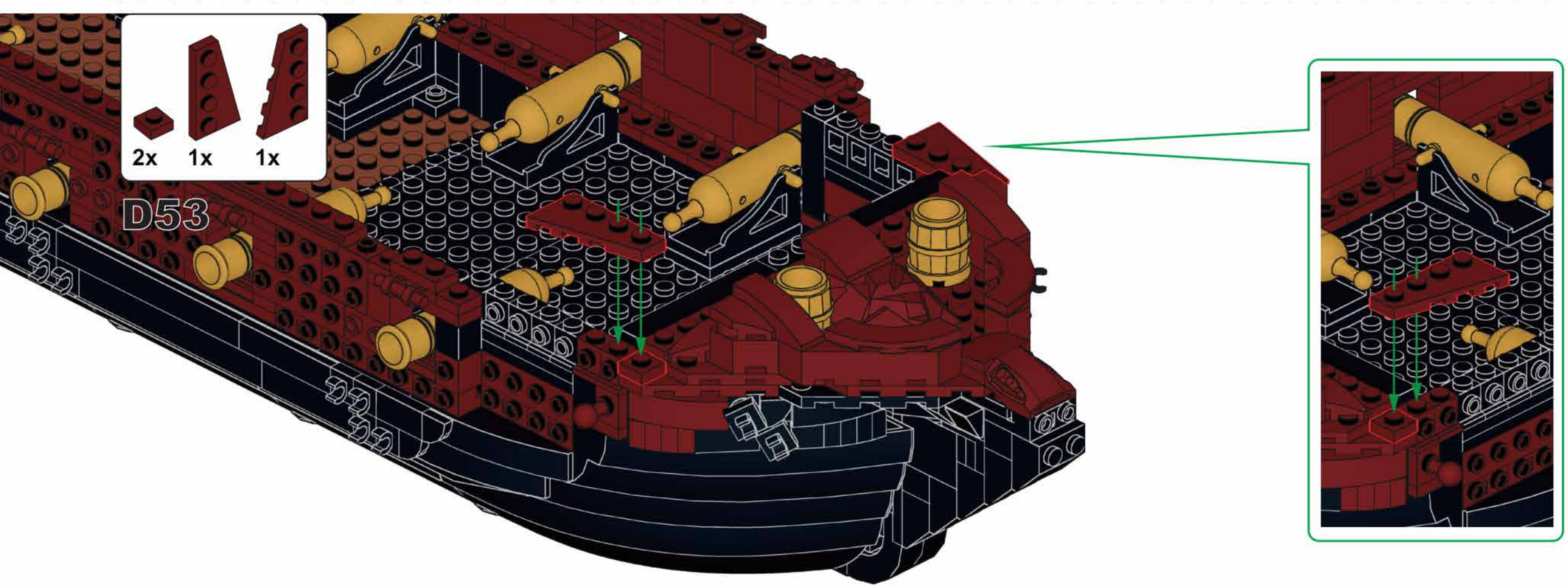
2x
1x
1x
D53

D54

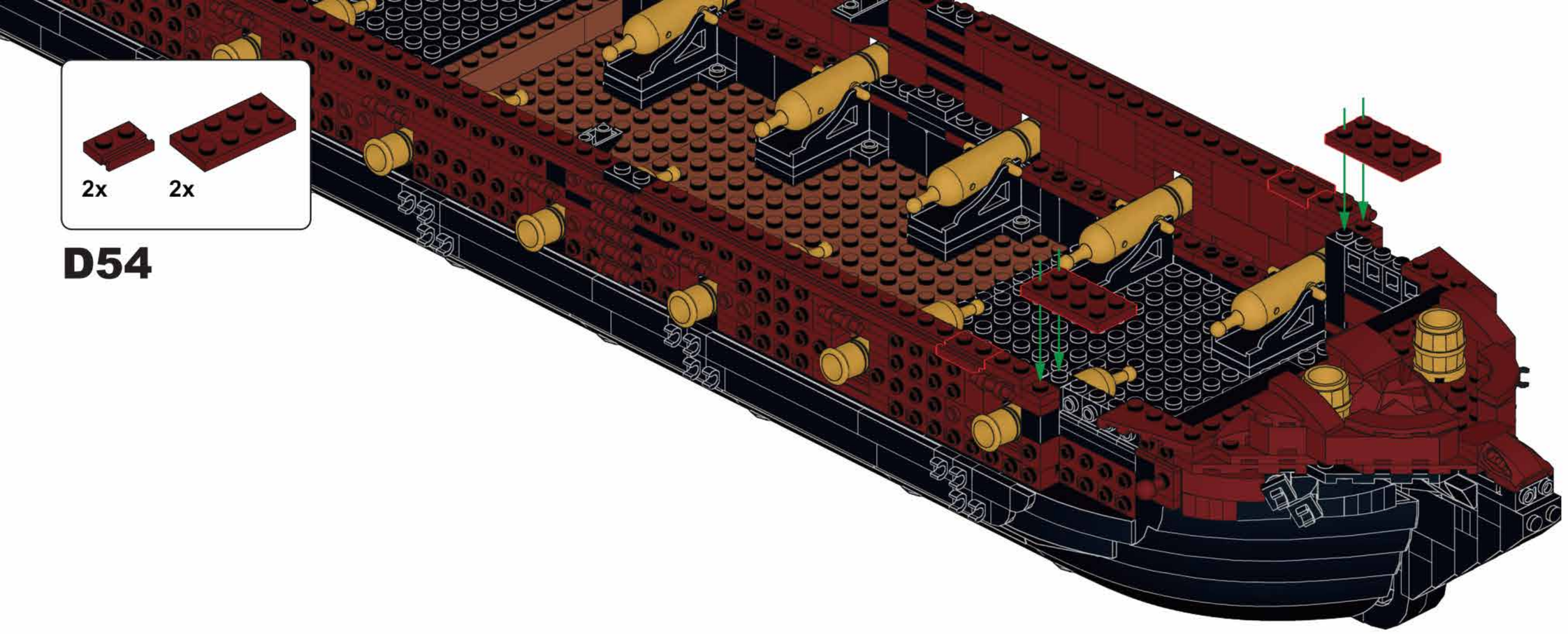

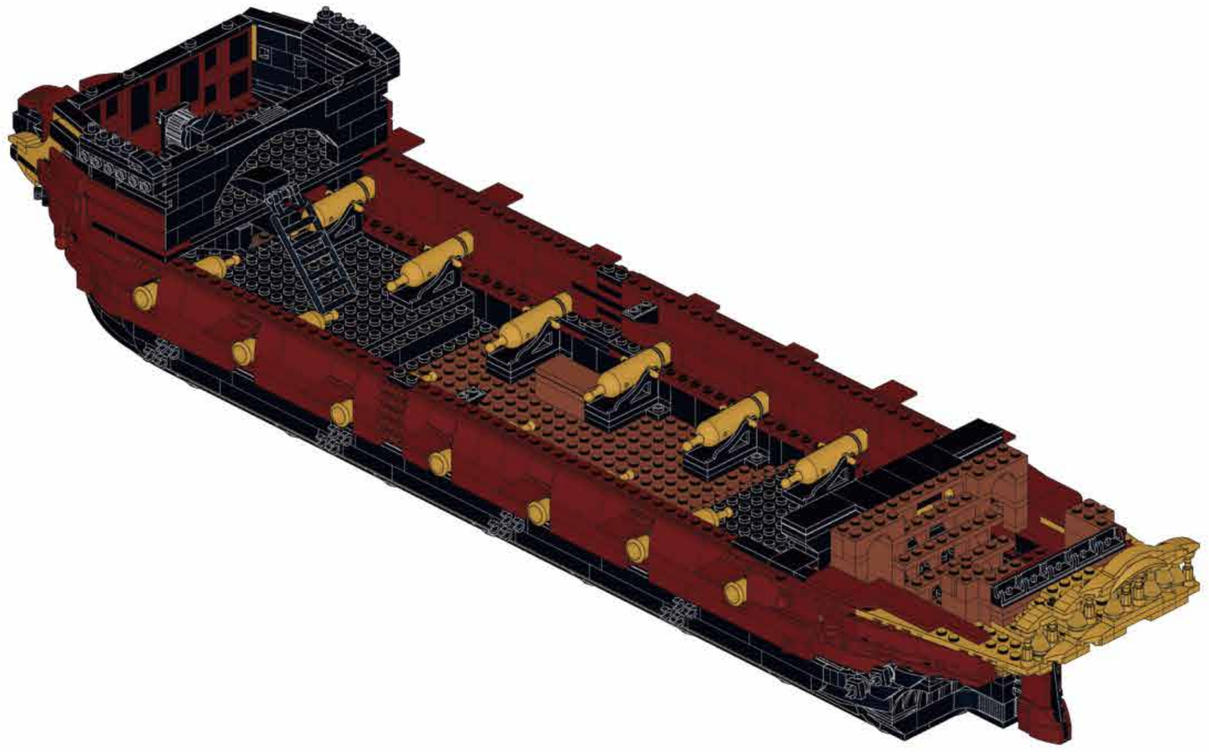

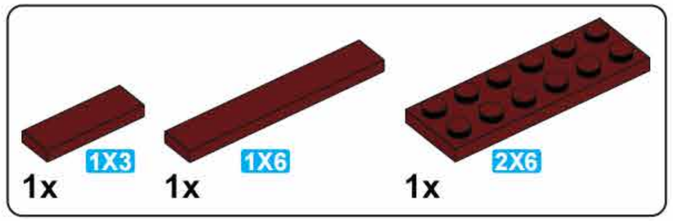

E1

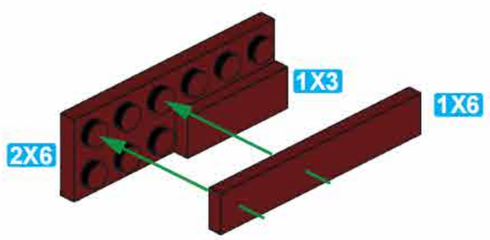

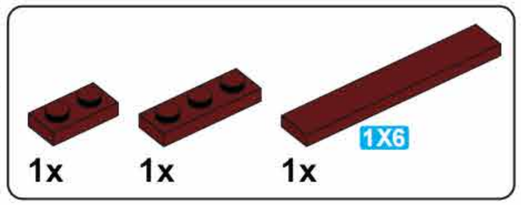

E2

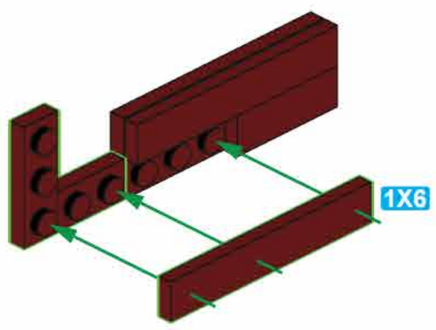

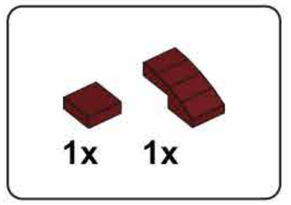

E3

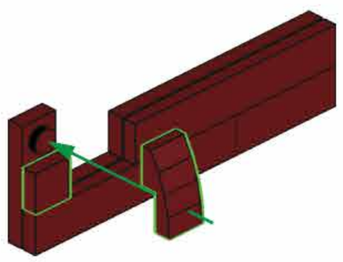

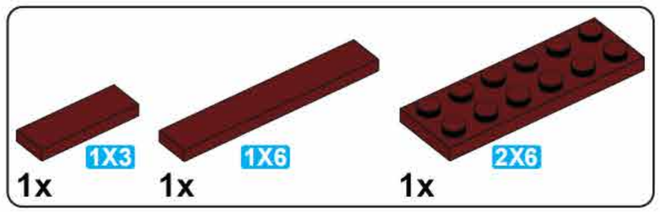

E4

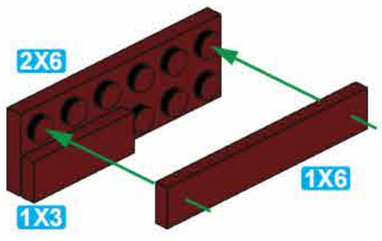

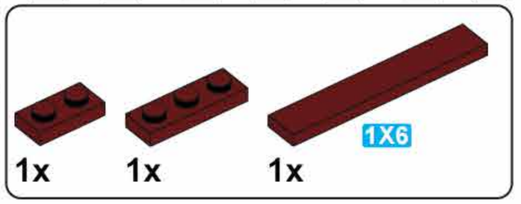

E5

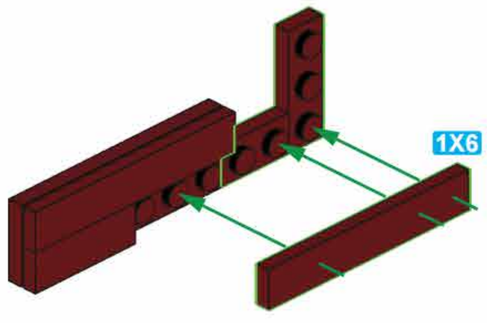

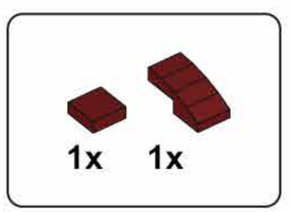

E6

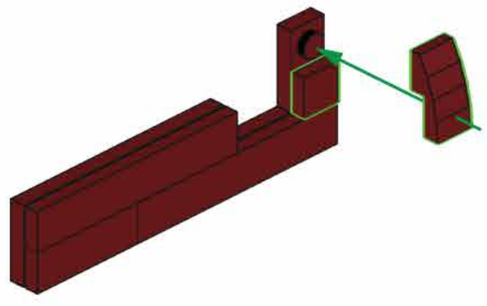

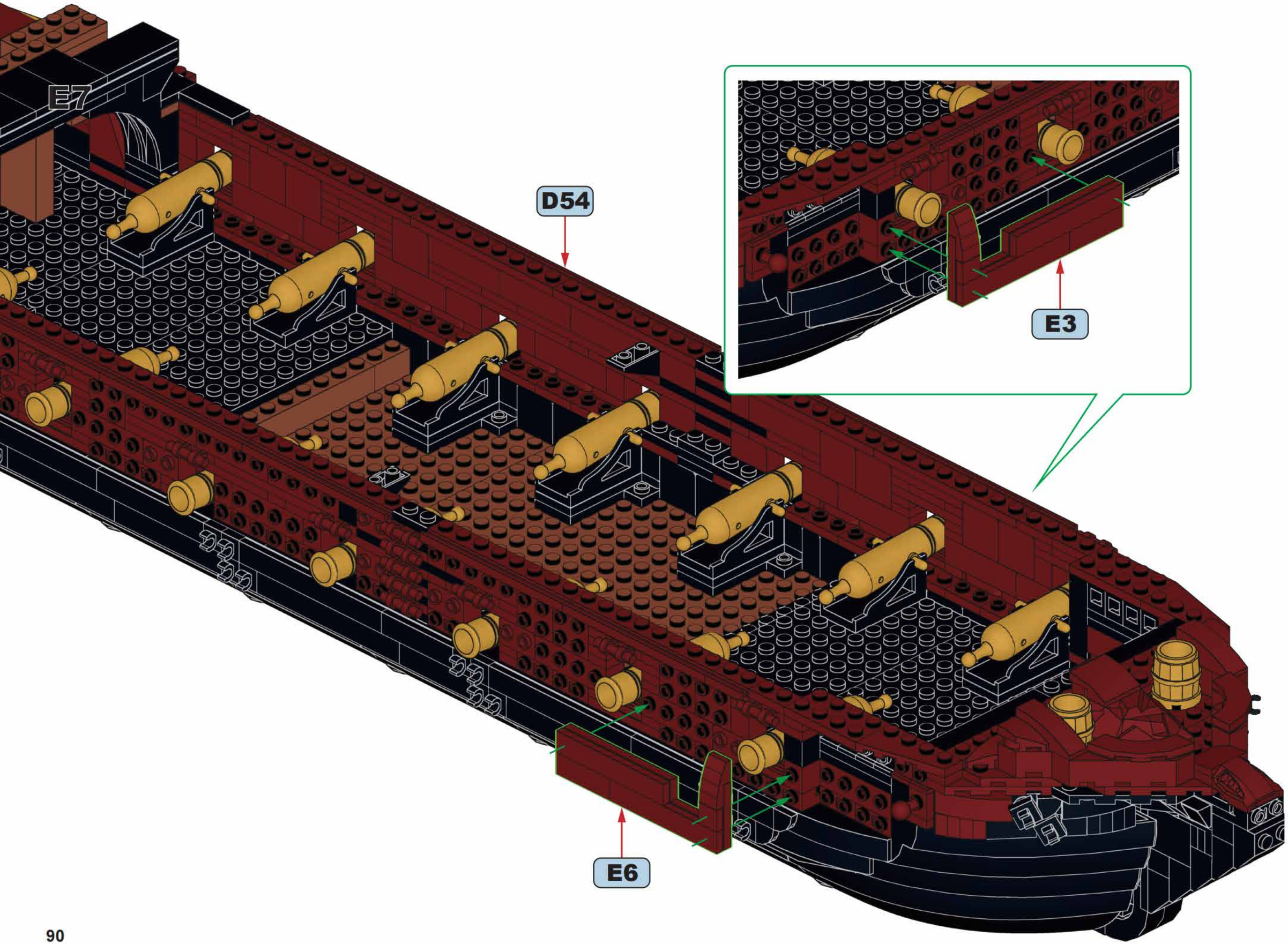
E7
D54
E3
E6

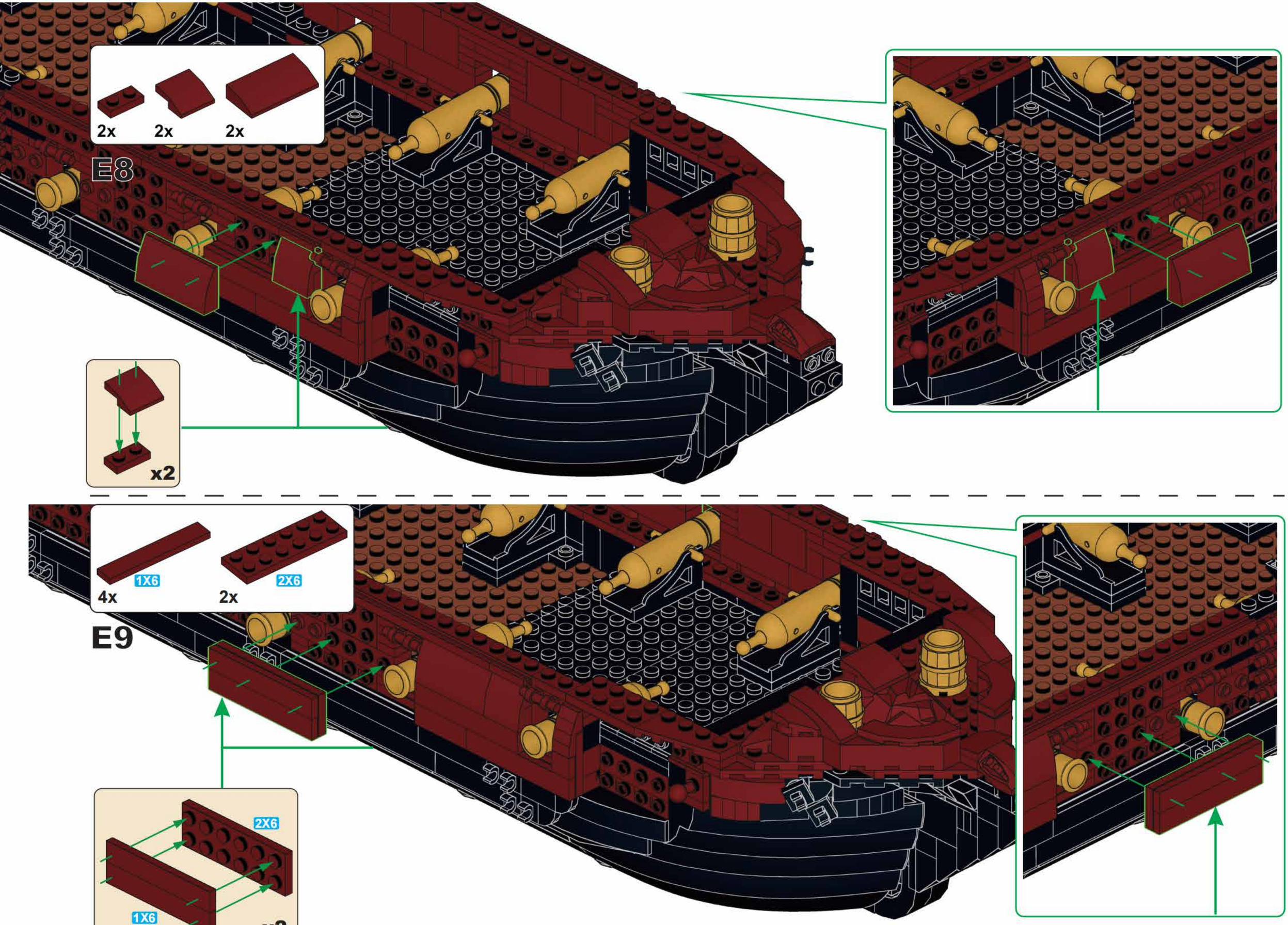
2x
2x
2x
E8
x2
4x
1X6
2x
2X6
E9
2X6
1X6
x2

2x 2x 2x

E10

x2

6x

E11

8x 4x 4x

E12

x4

6x 4x 1X6 4x

E13

1

1X6

1X6

2

x2

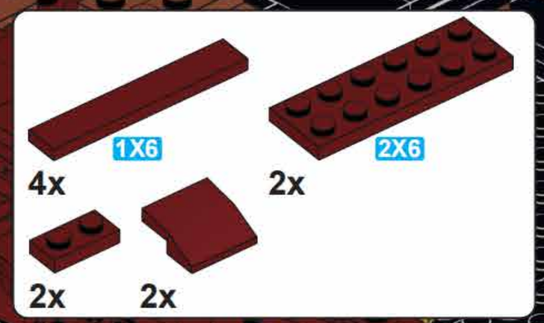

E14

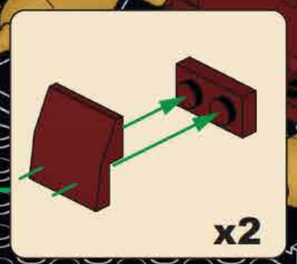

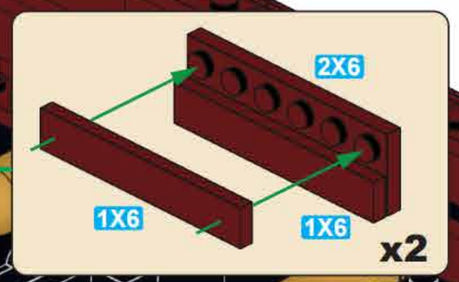

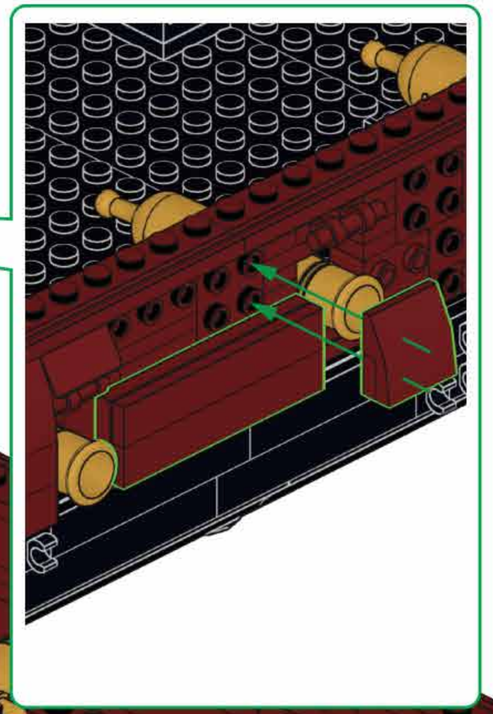

E15

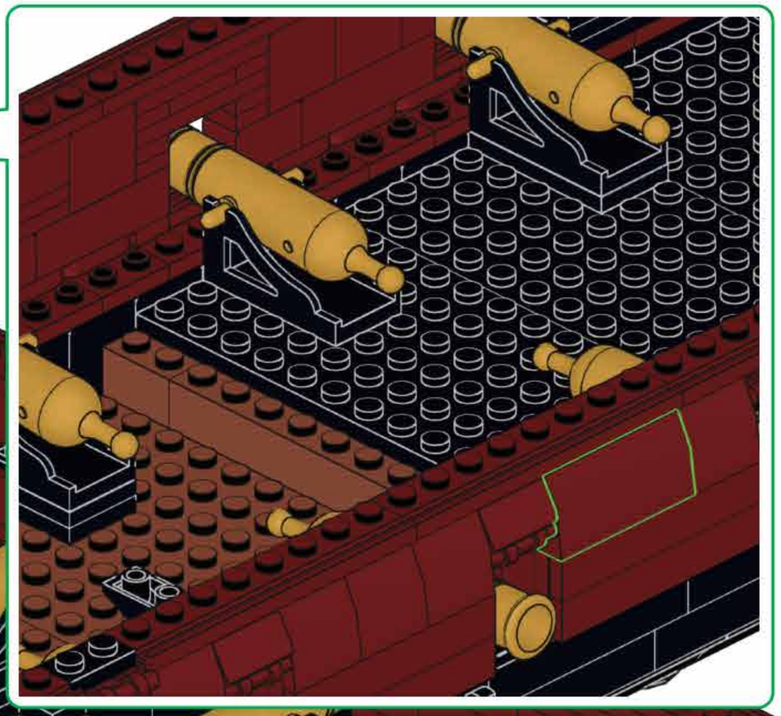

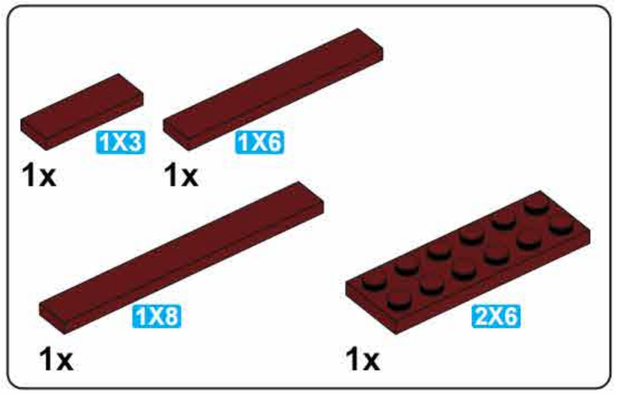

E16

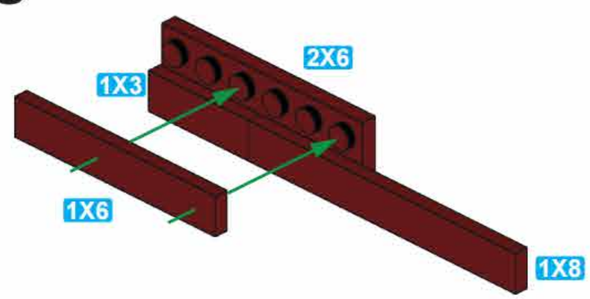

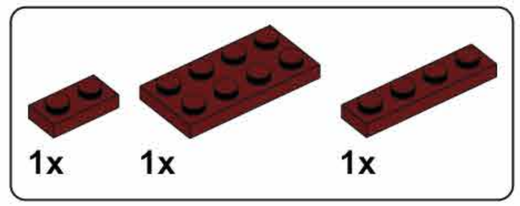

E17

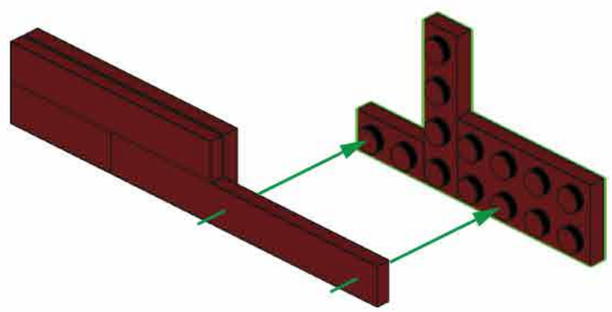

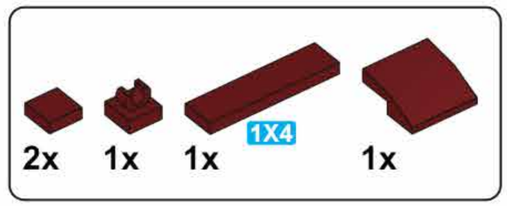

E18

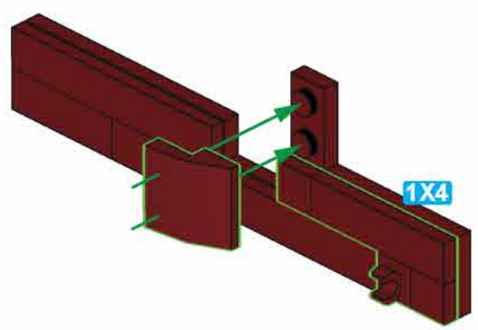

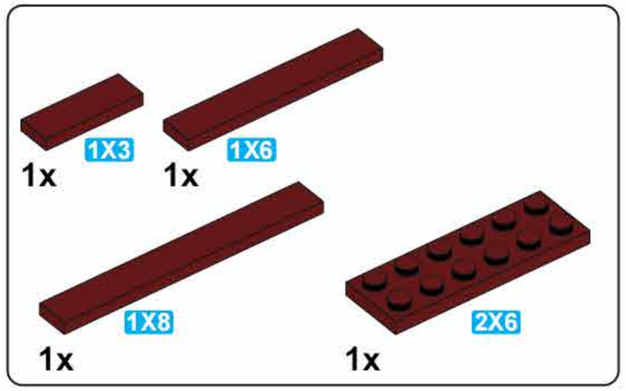

E19

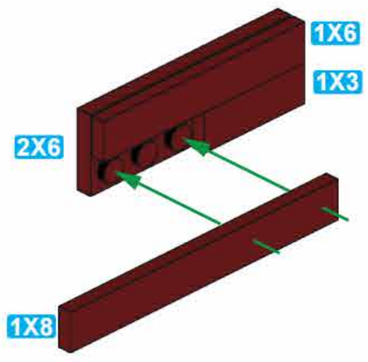

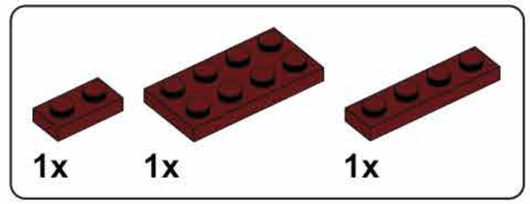

E20

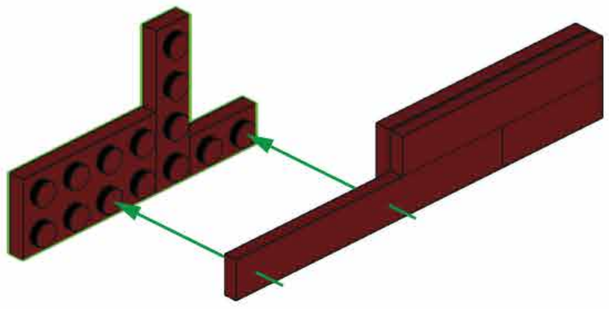

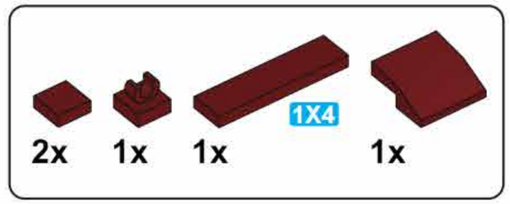

E21

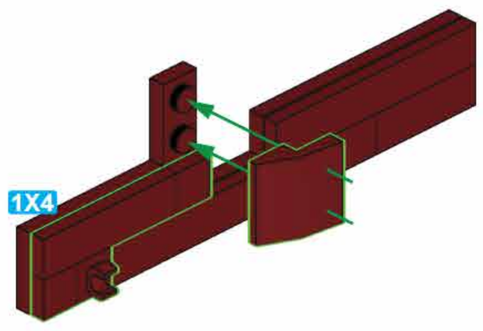

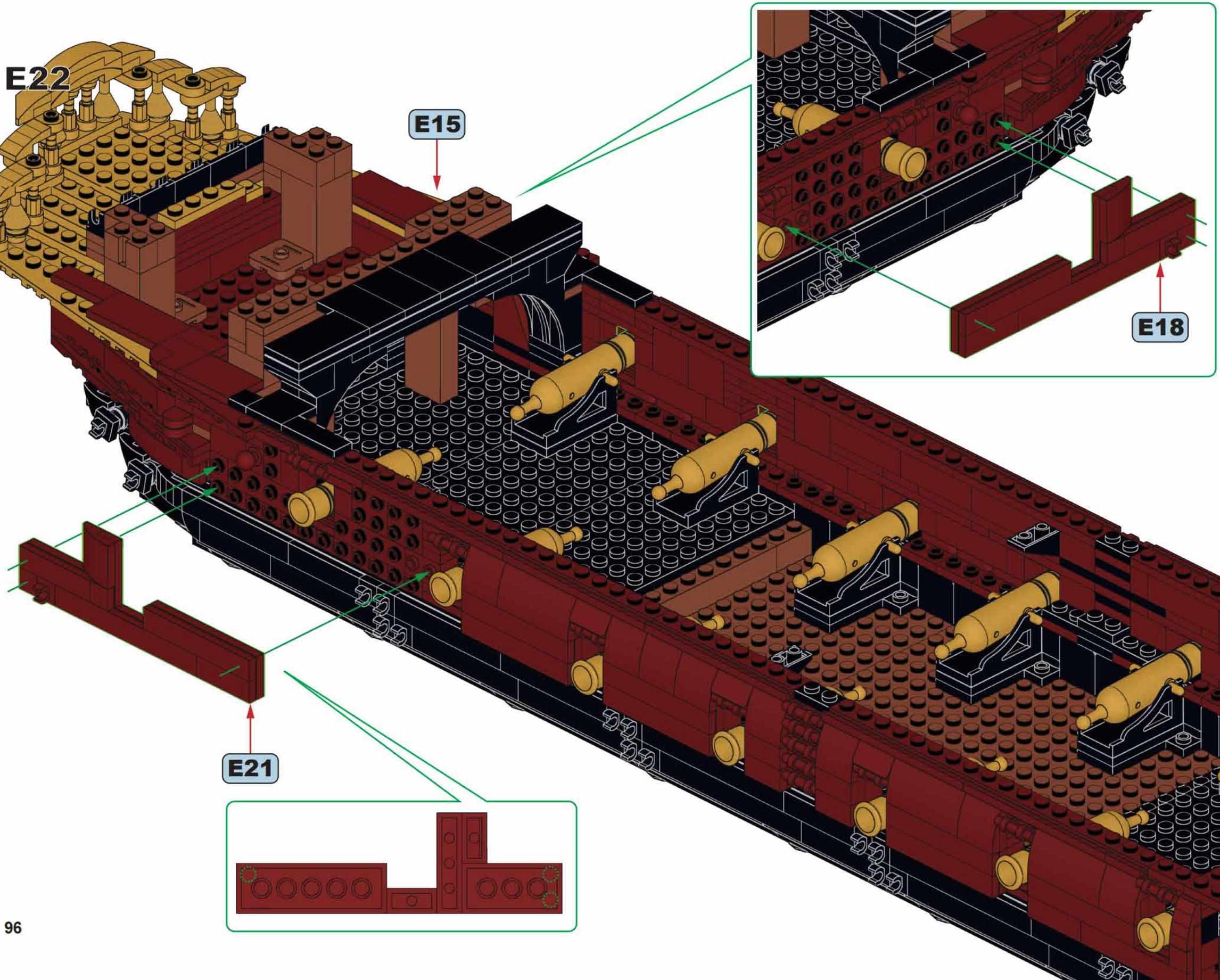
E22
E15
E18
E21

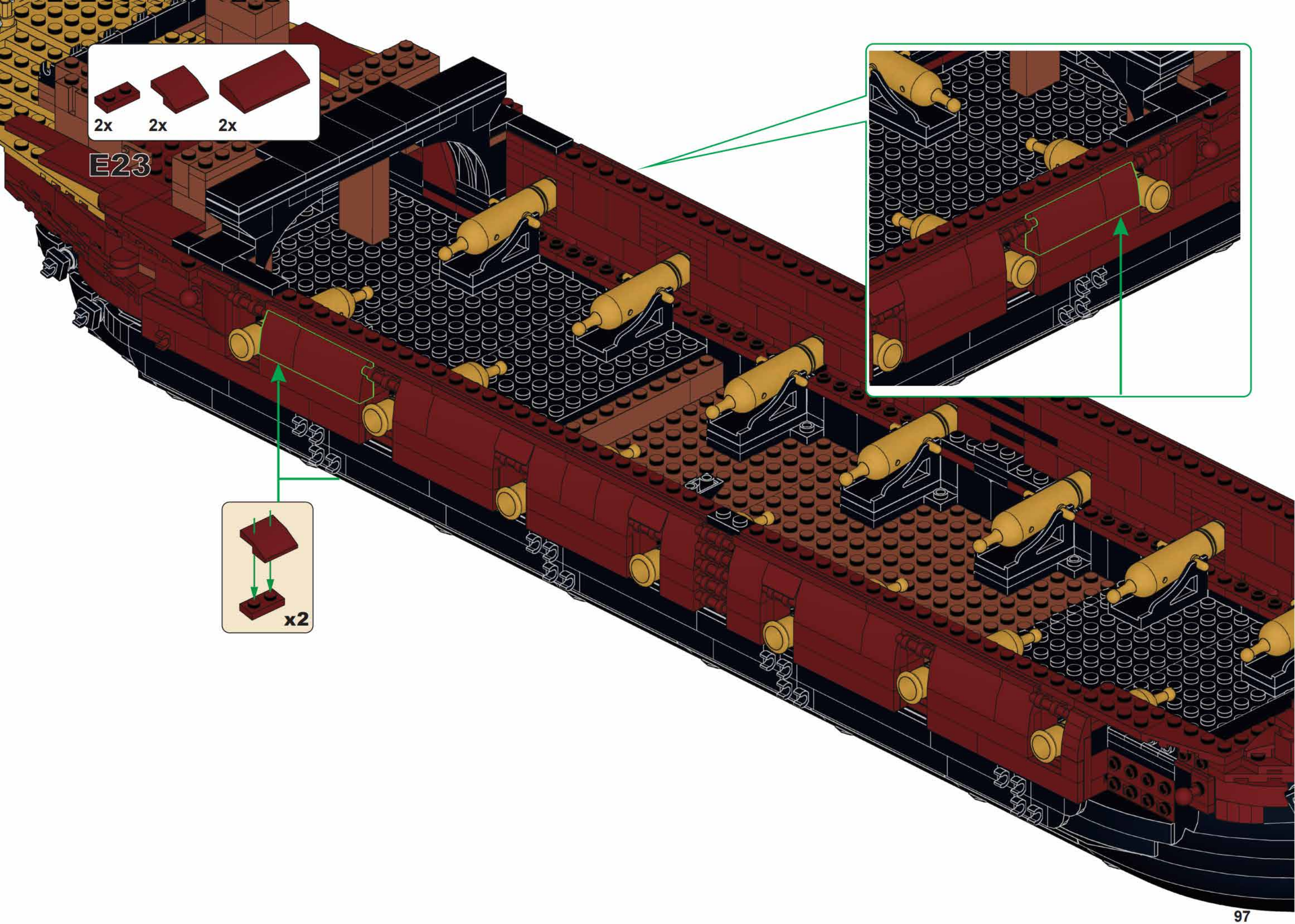
2x
2x
2x
E23
x2

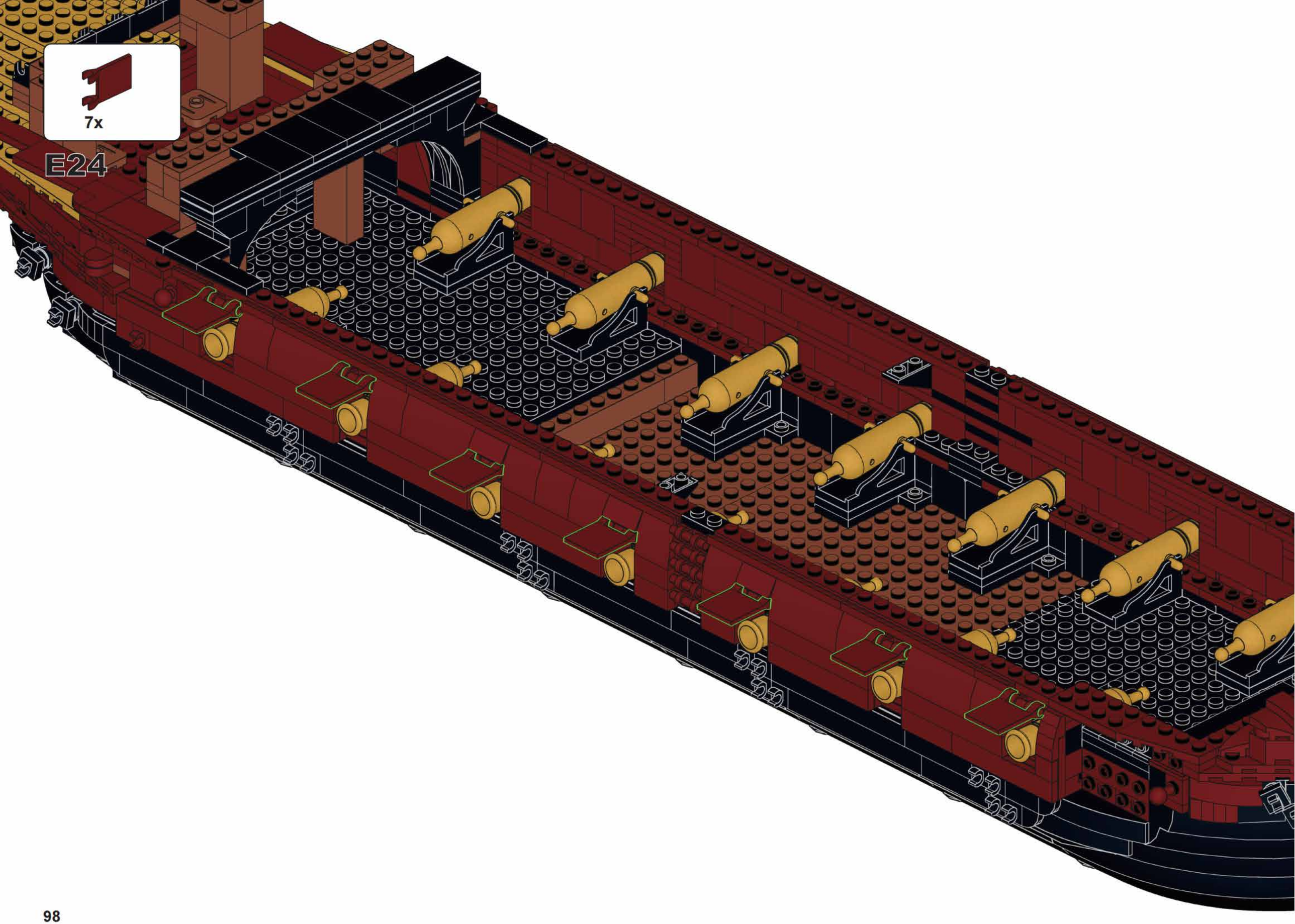
7x
E24

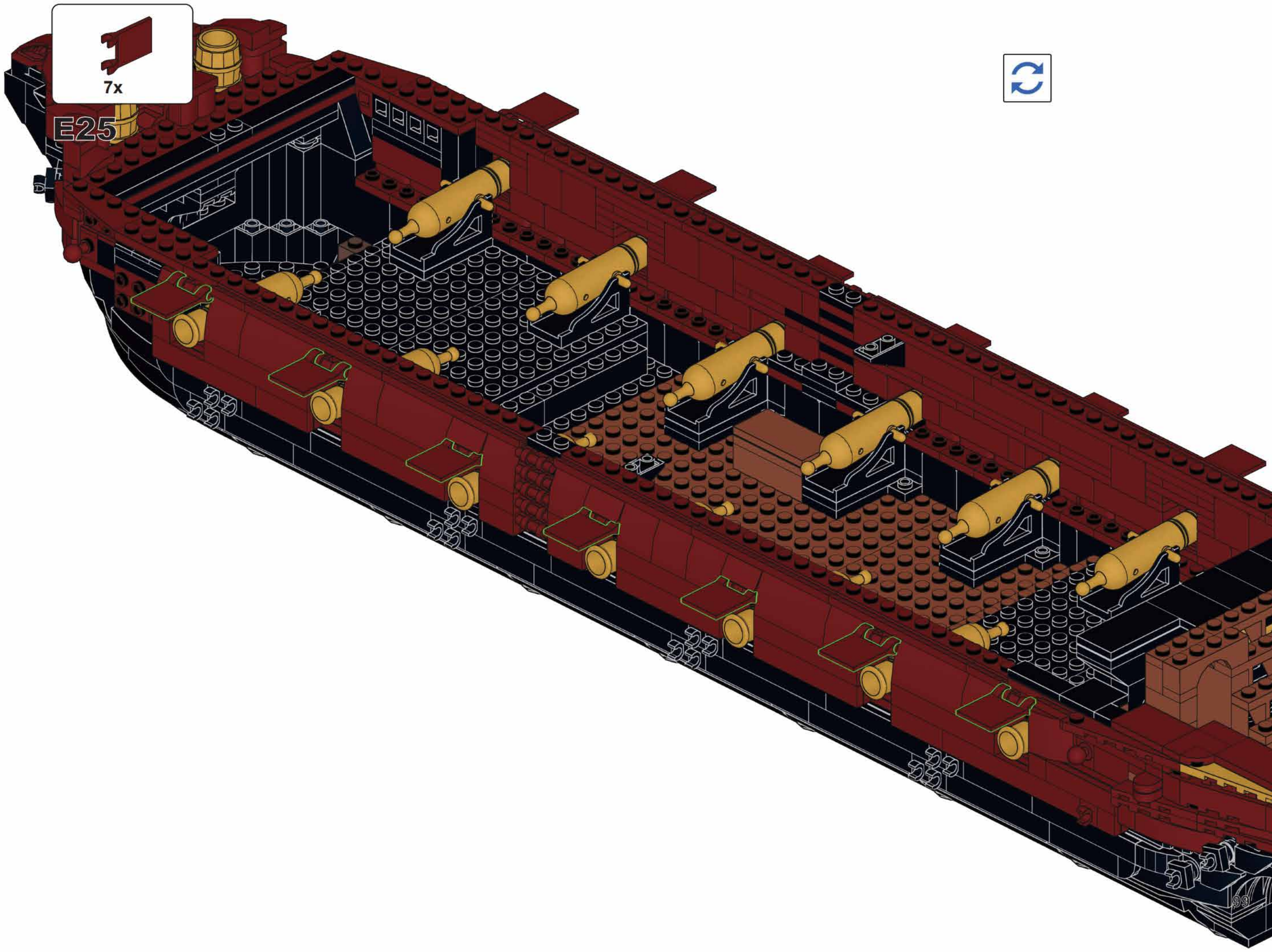
7x
E25

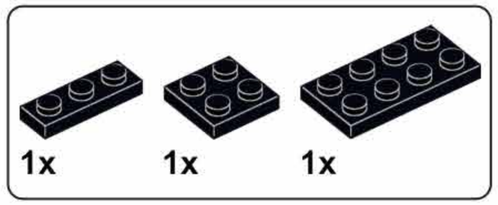

E26

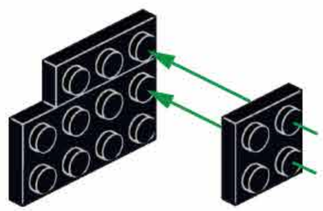

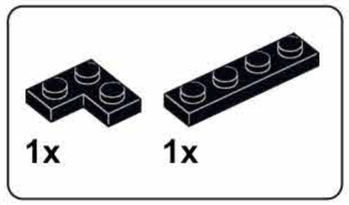

E27

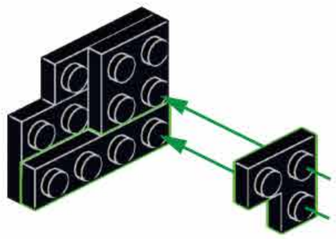

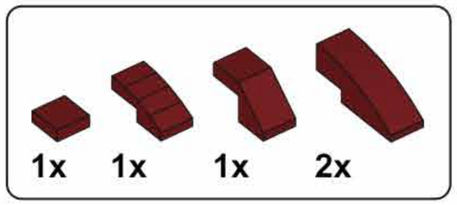

E28

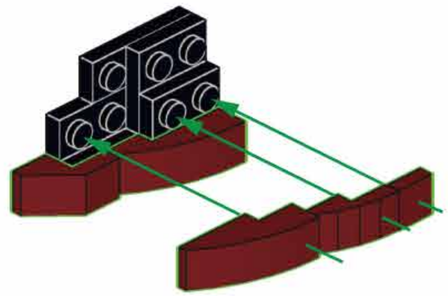

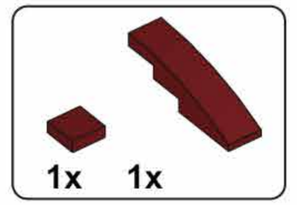

E29

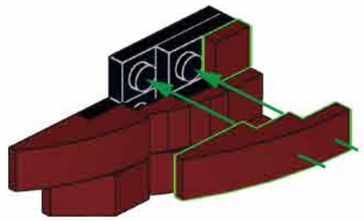

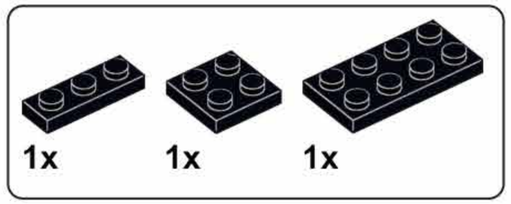

E30

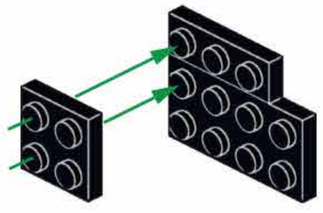

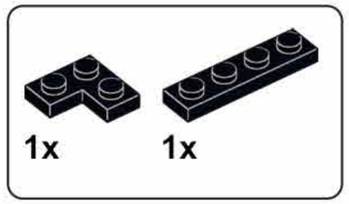

E31

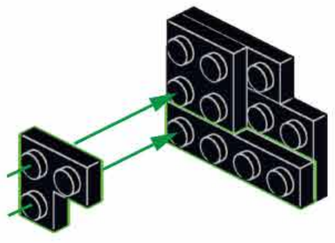

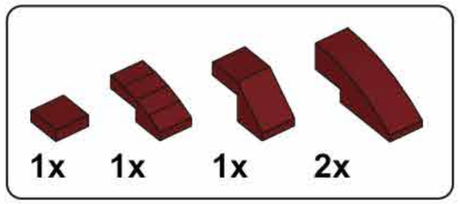

E32

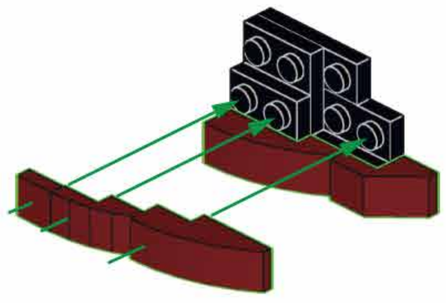

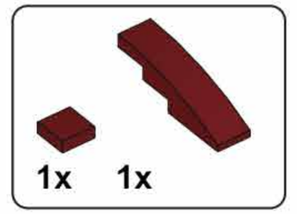

E33

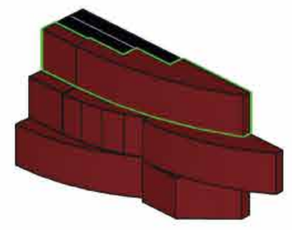

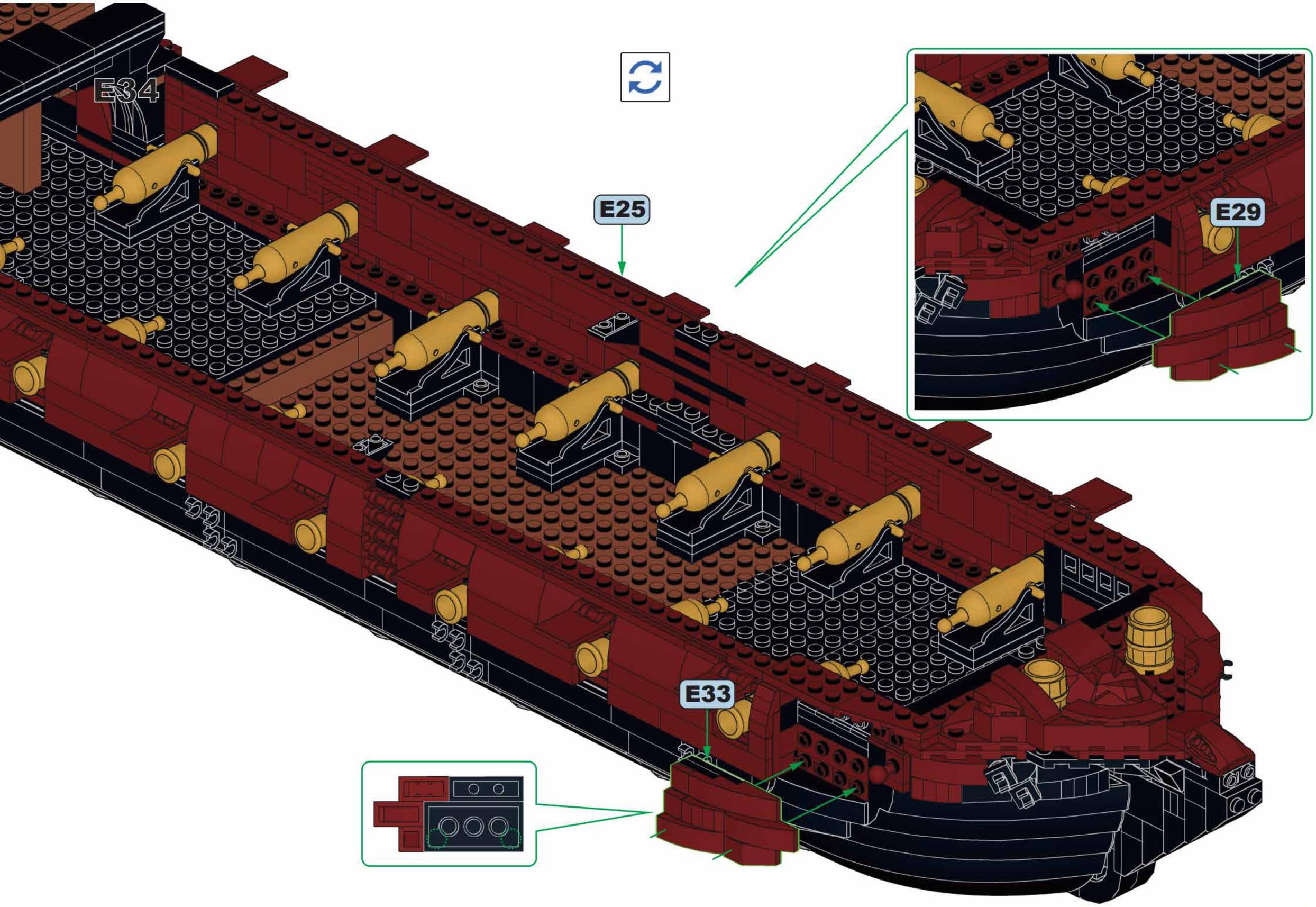
E34
E25
E29
E33

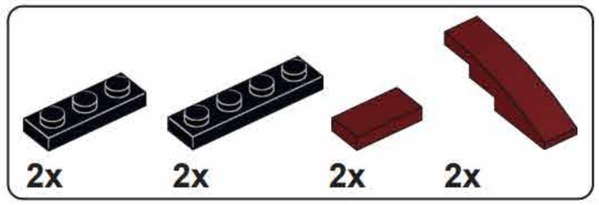

E35

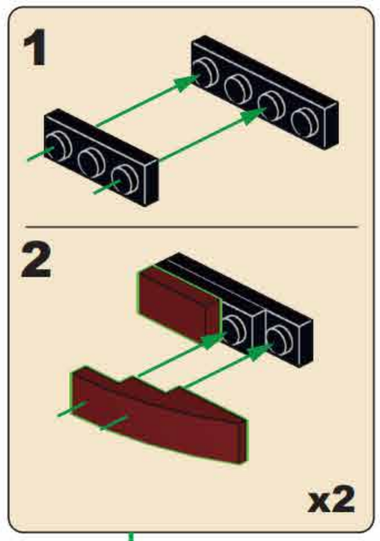

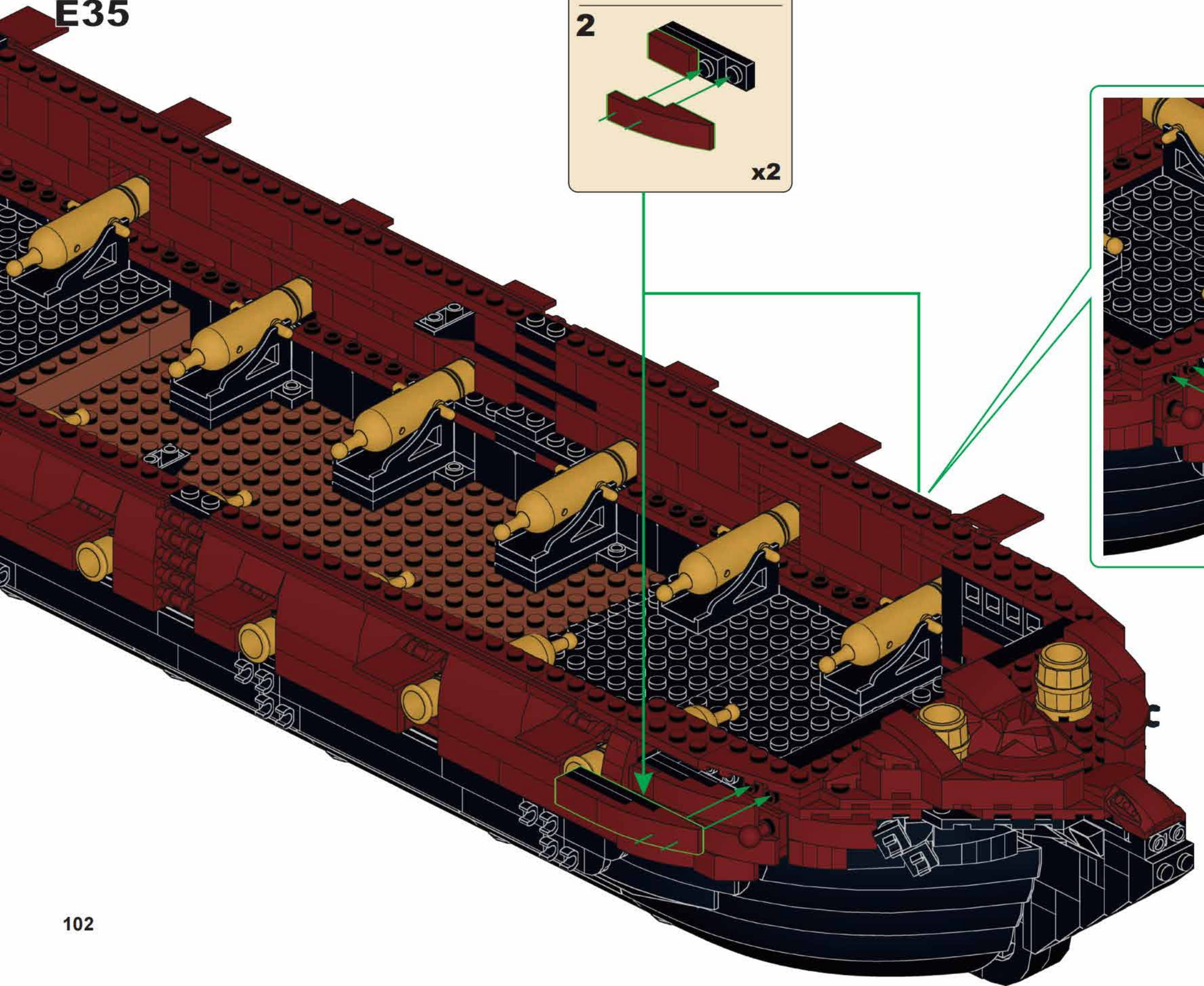

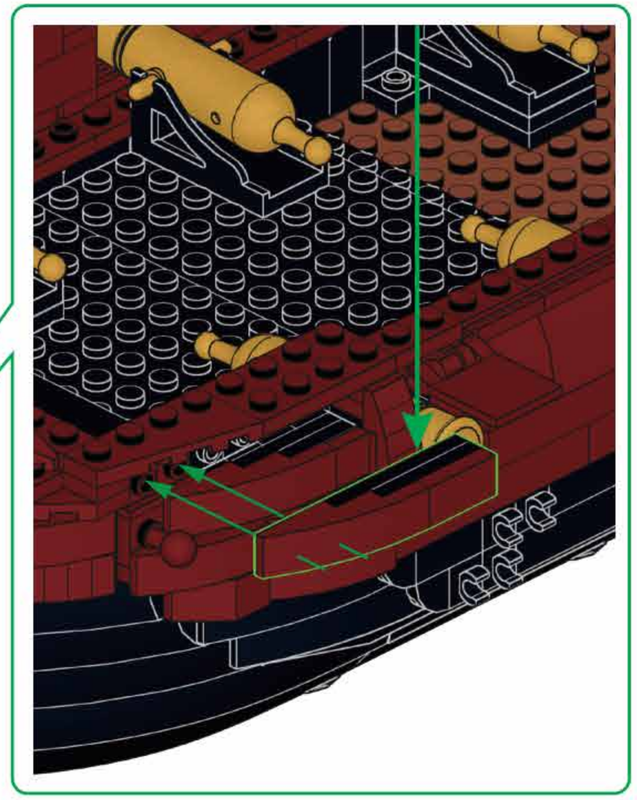

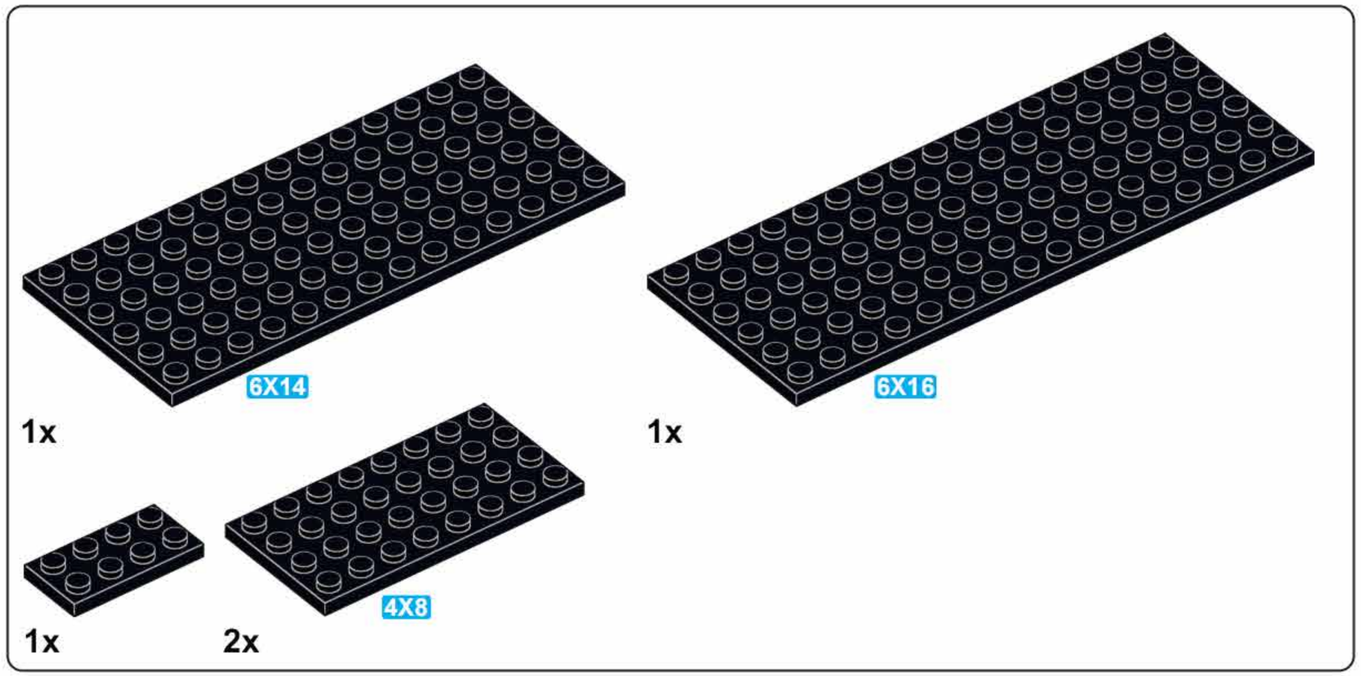
6X14
1x
6X16
1x
1x
4X8
2x

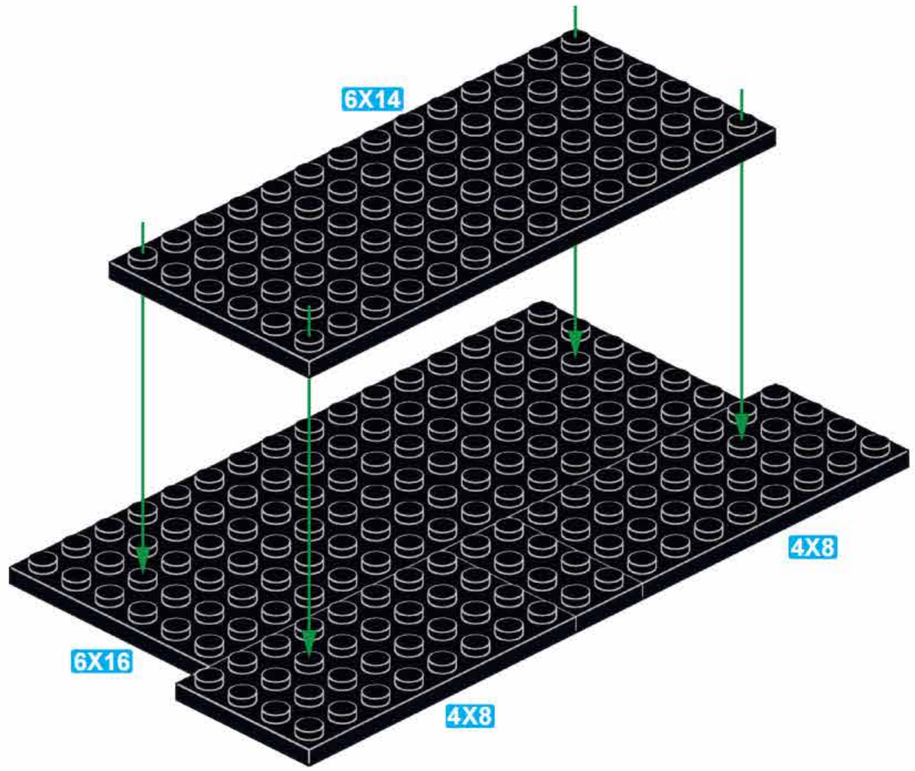
6X14
4X8
6X16
4X8

E36

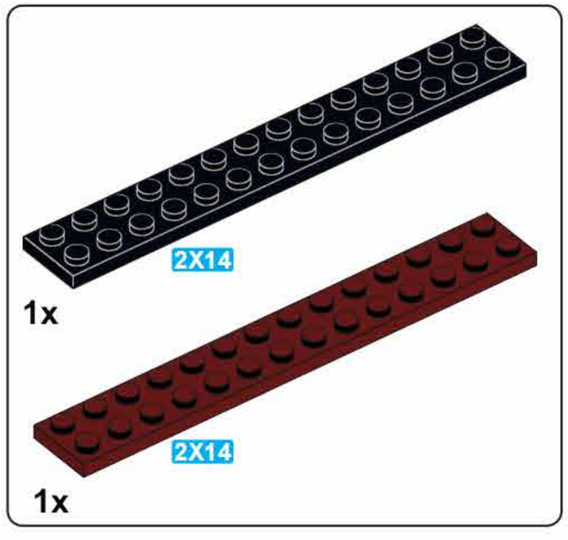
2X14
1x
2X14
1x

E37

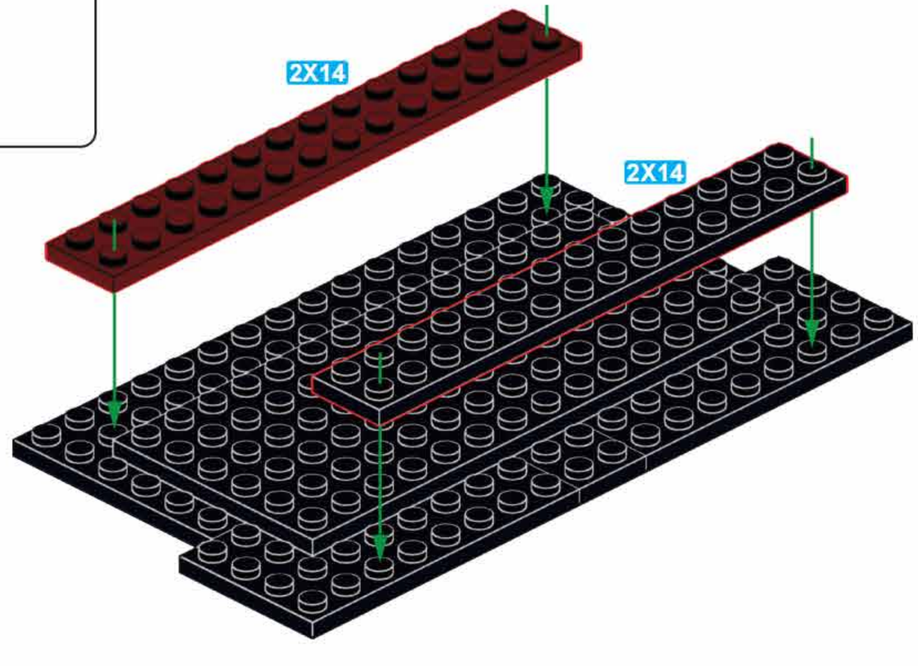
2X14
2X14

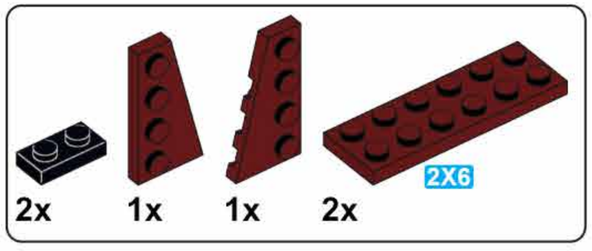
2X6
2x
1x
1x
2x

E38

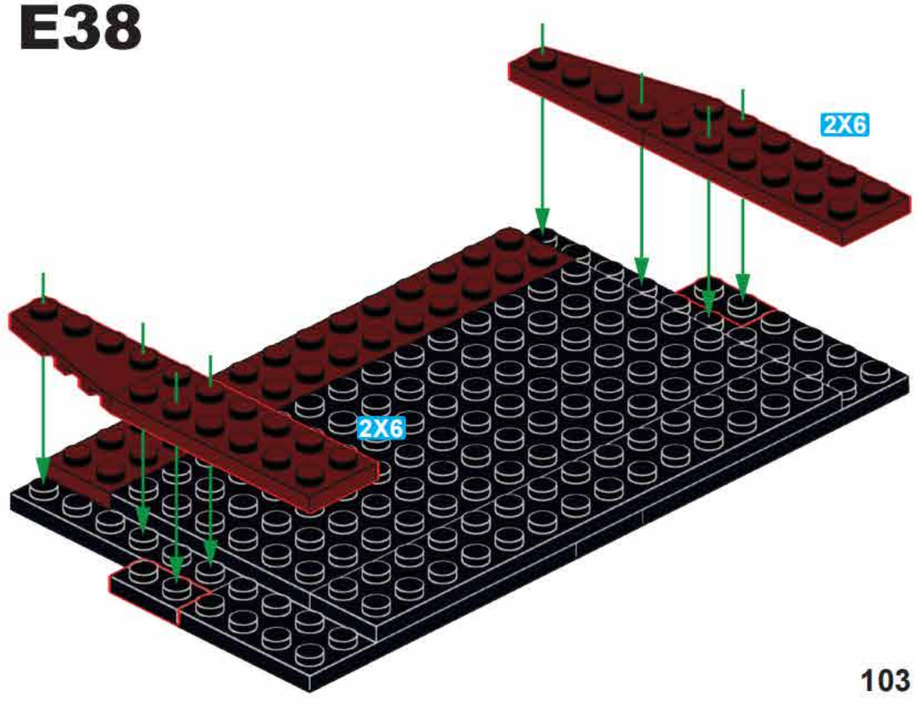
2X6
2X6

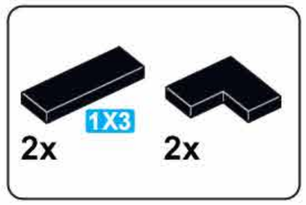

E39

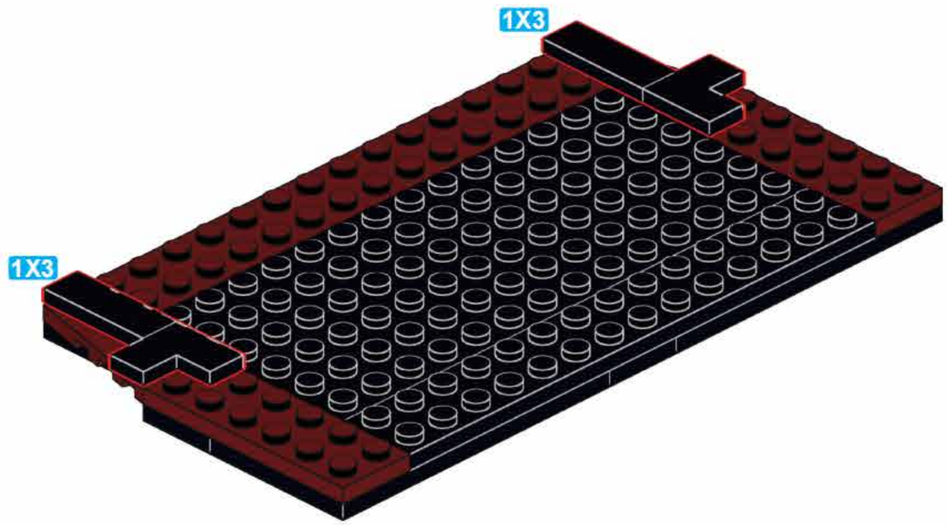

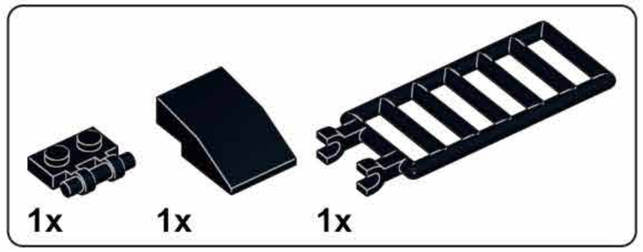

E40

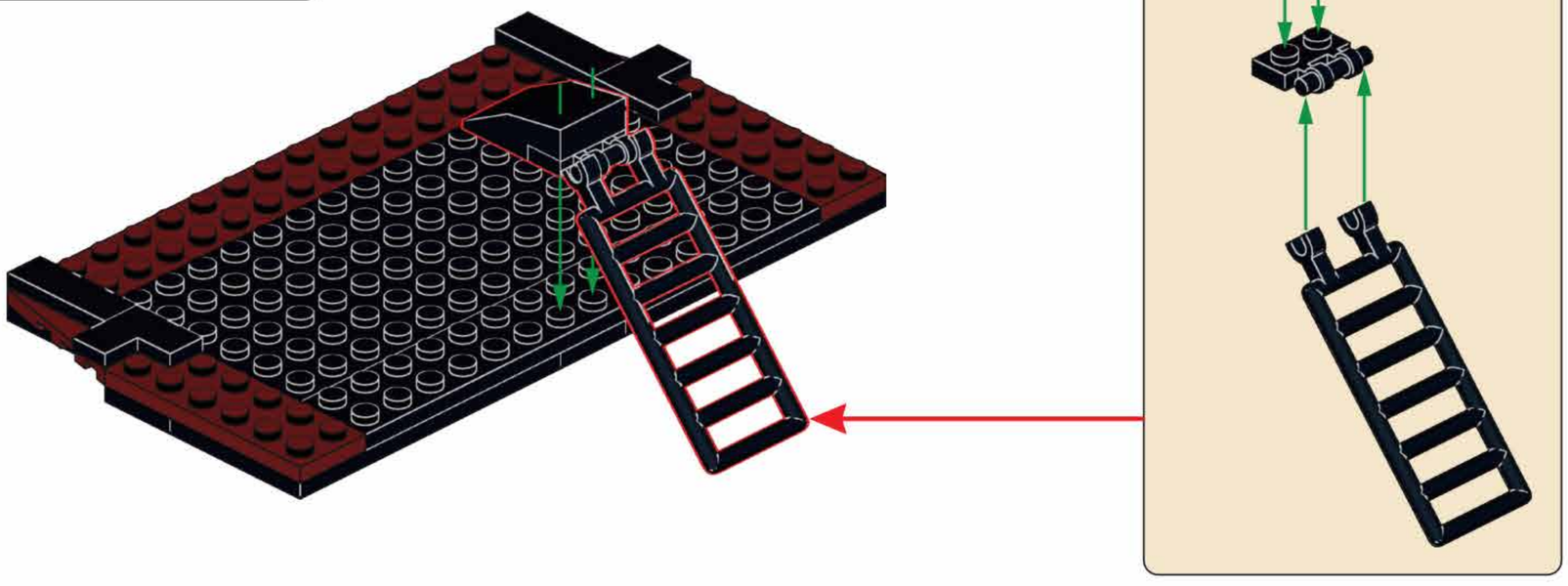

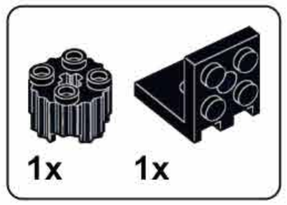

E41

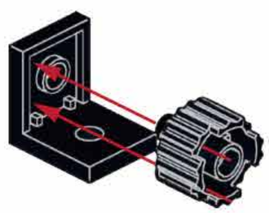

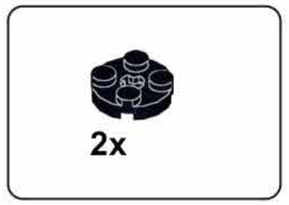

E42

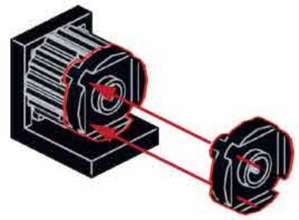

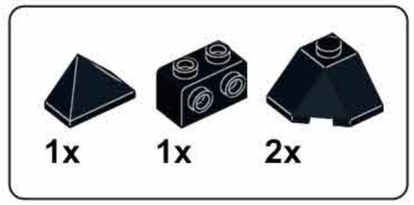

E43

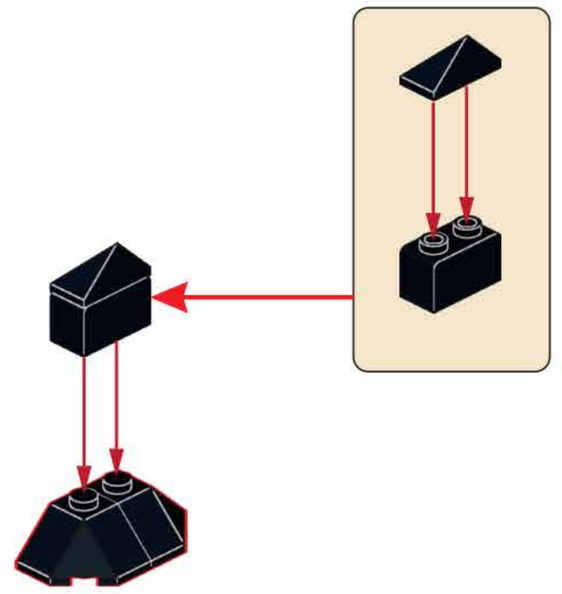

E44

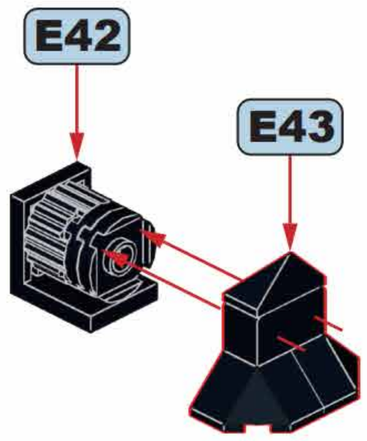

E45

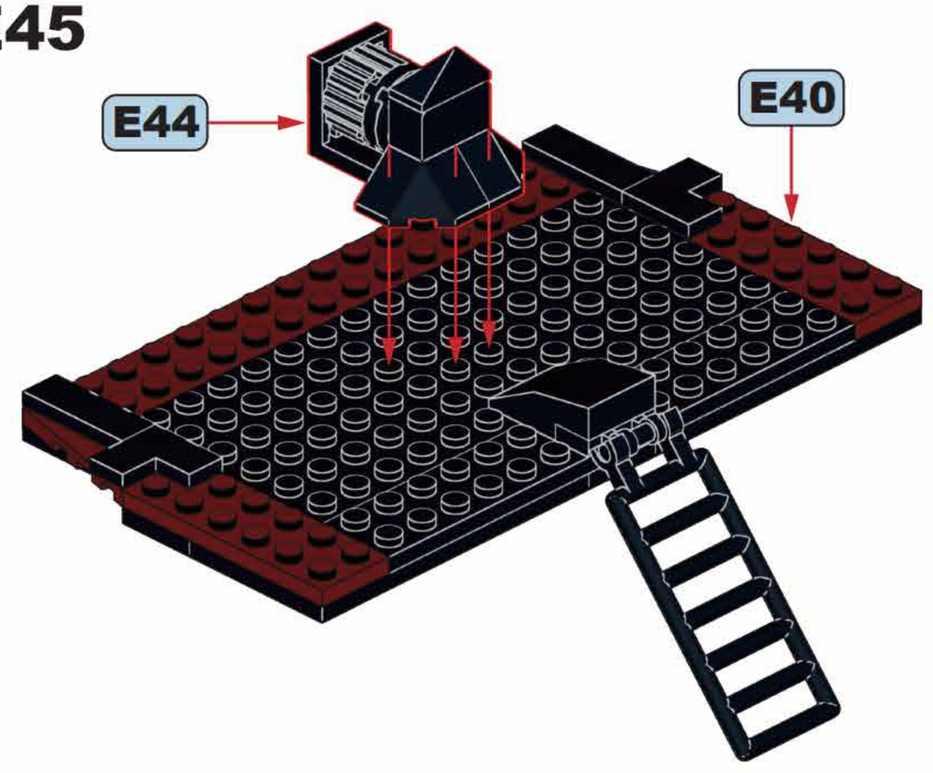

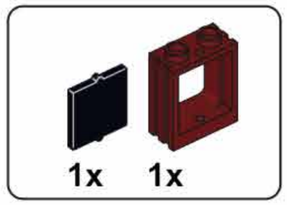

E46

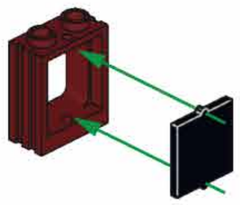

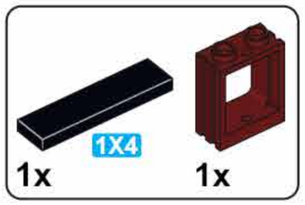

E47

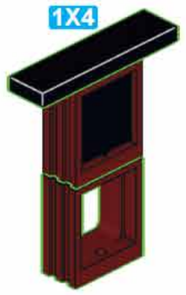

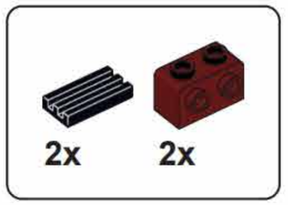

E48

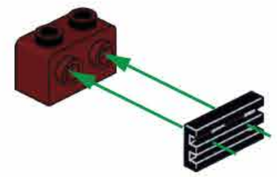

x2

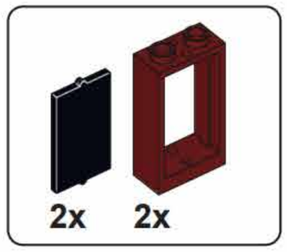

E49

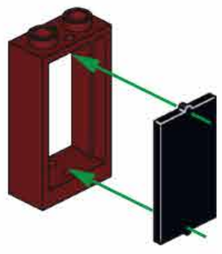

x2

E50

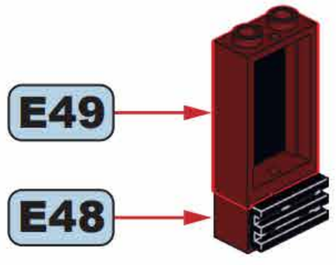

x2

E51

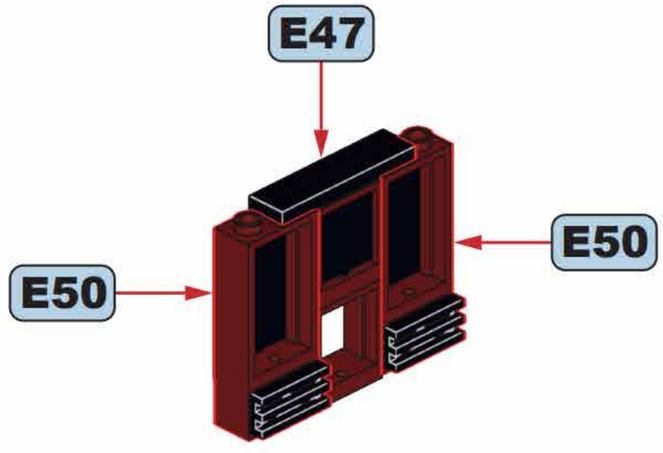

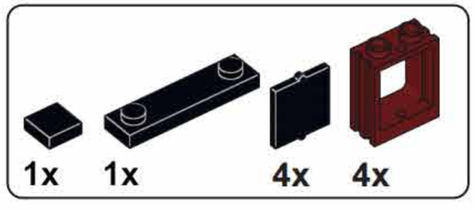

E52

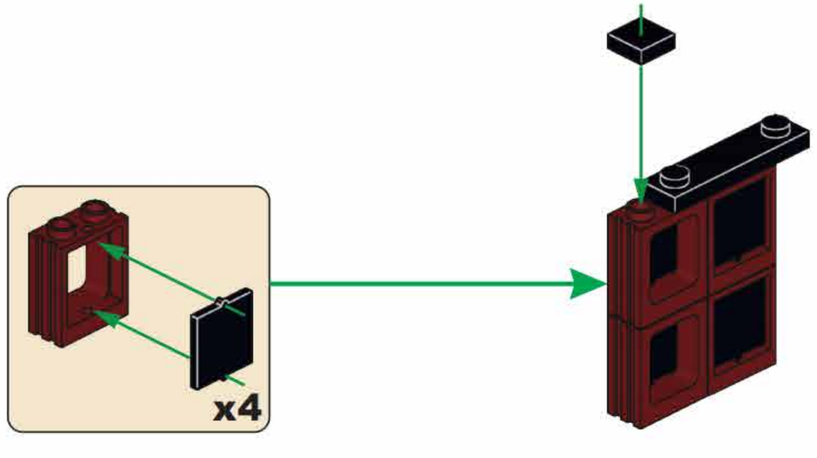

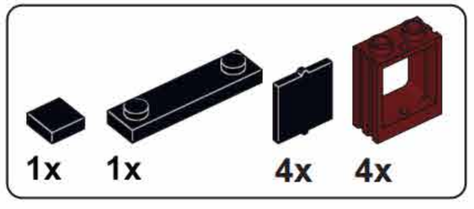

E53

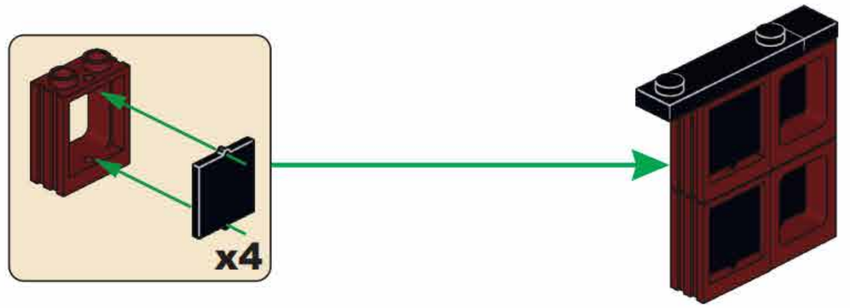

E54

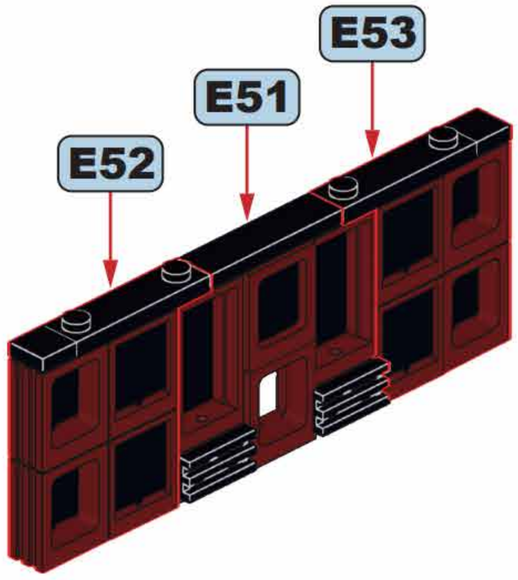

E55

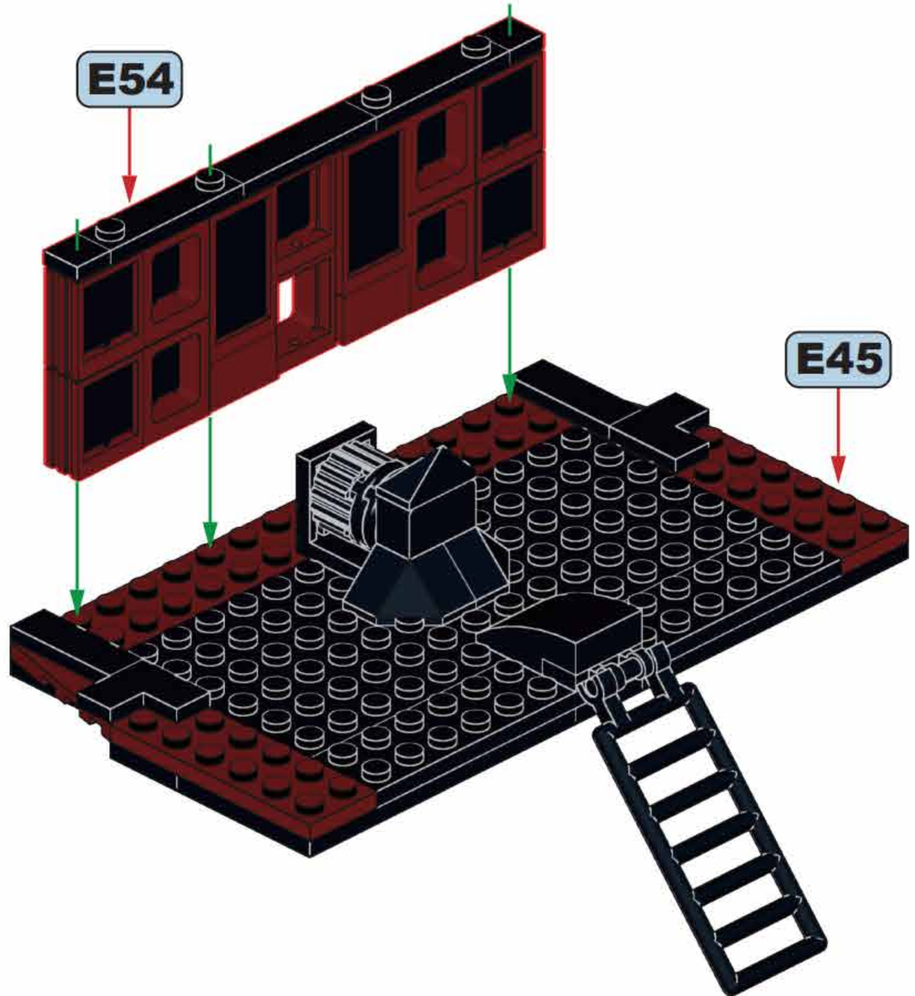

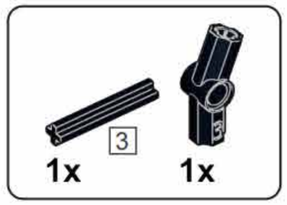

E56

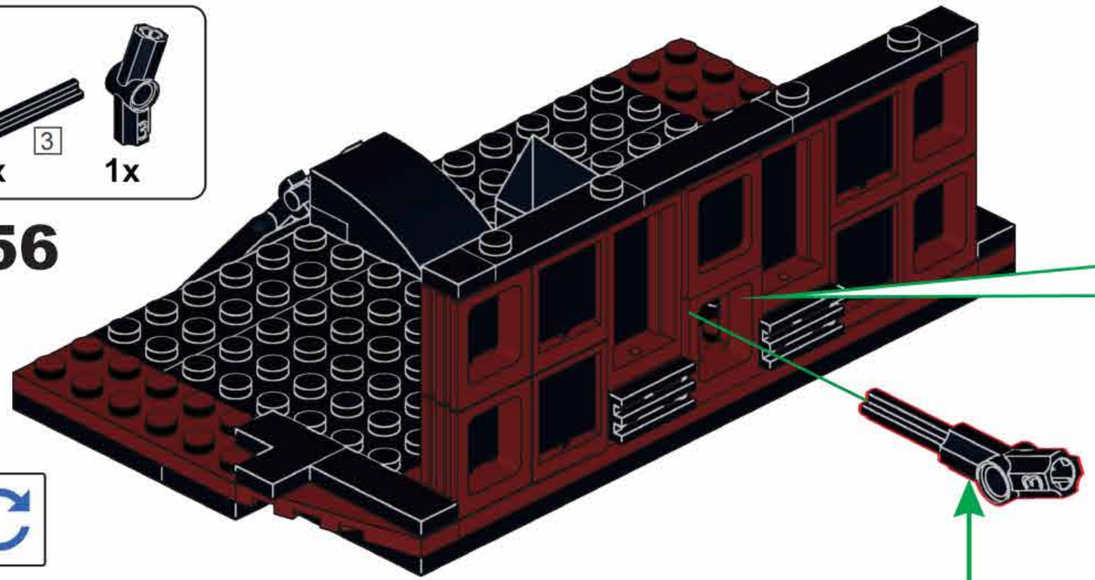

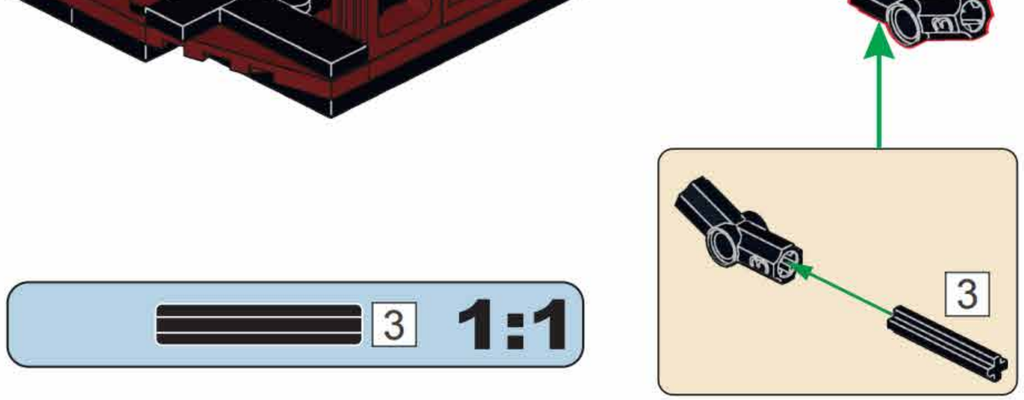

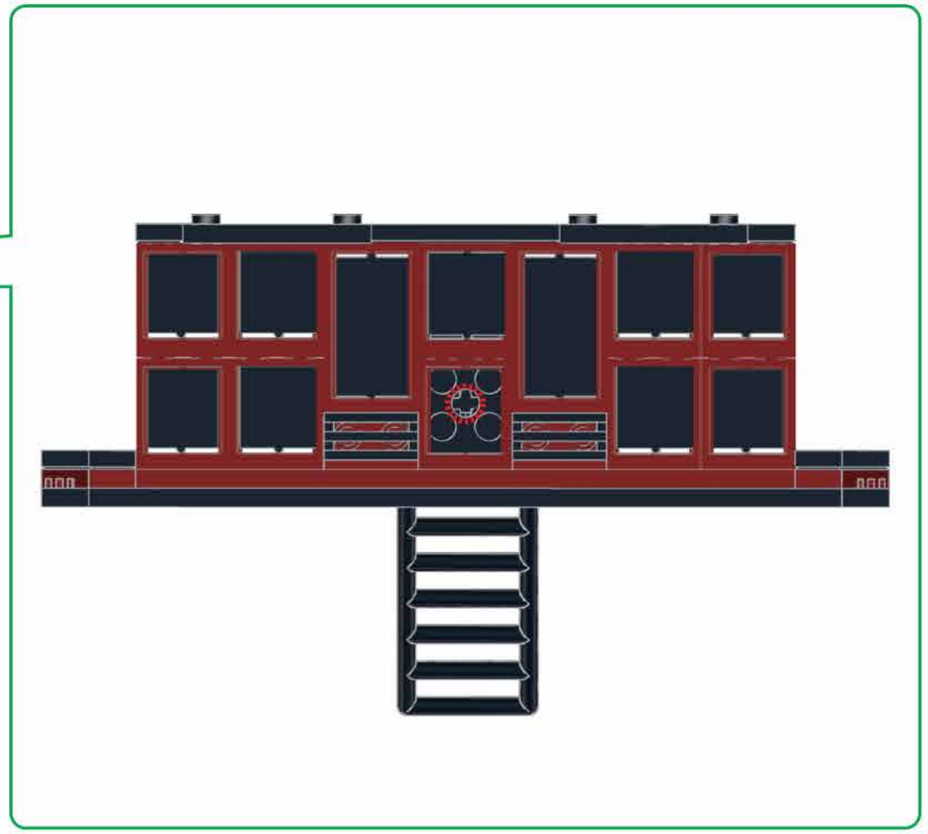

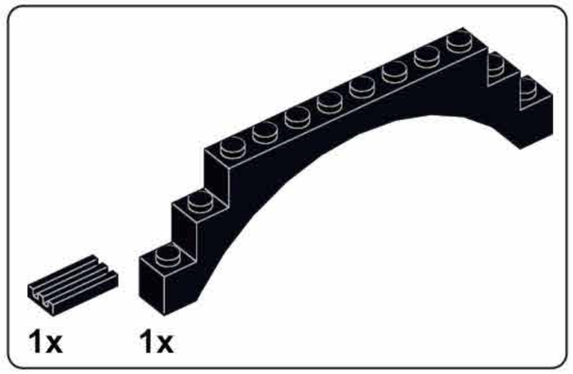

E57

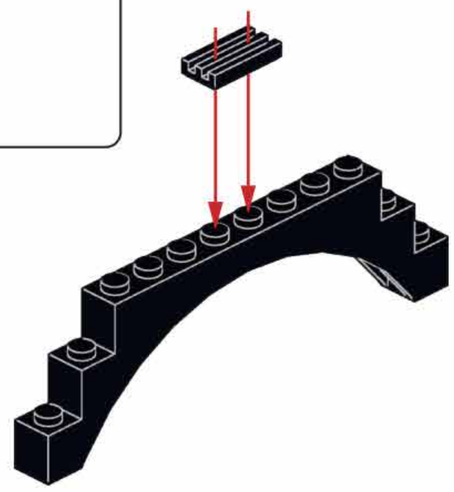

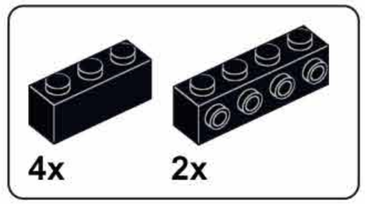

E58

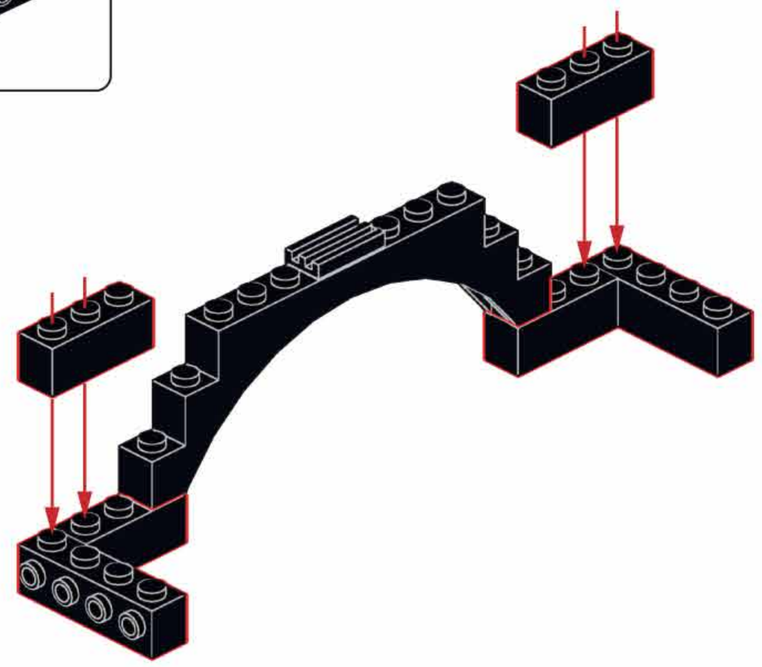

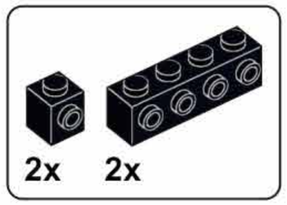

E59

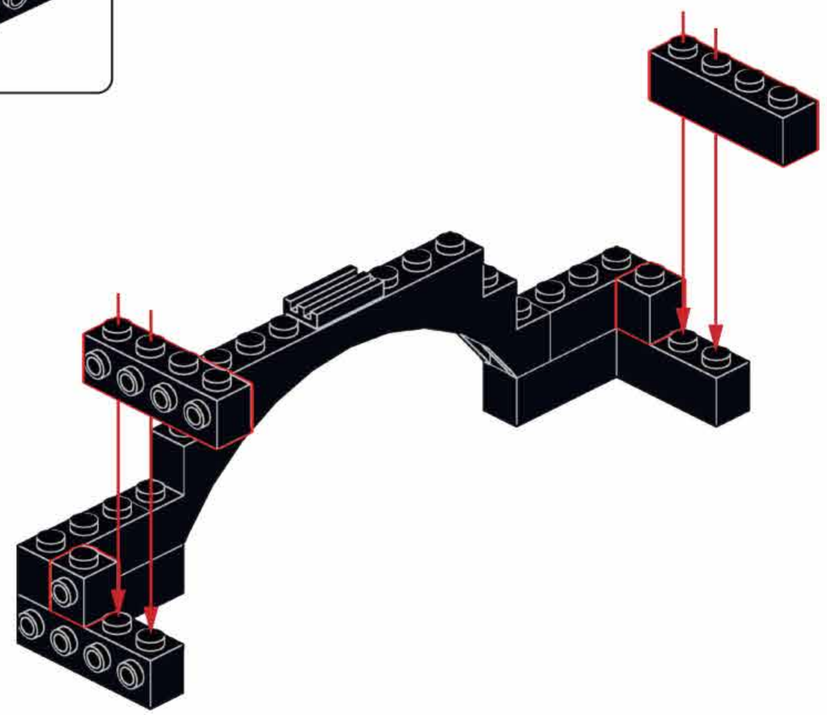

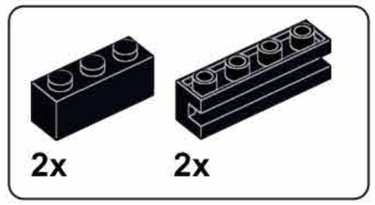

E60

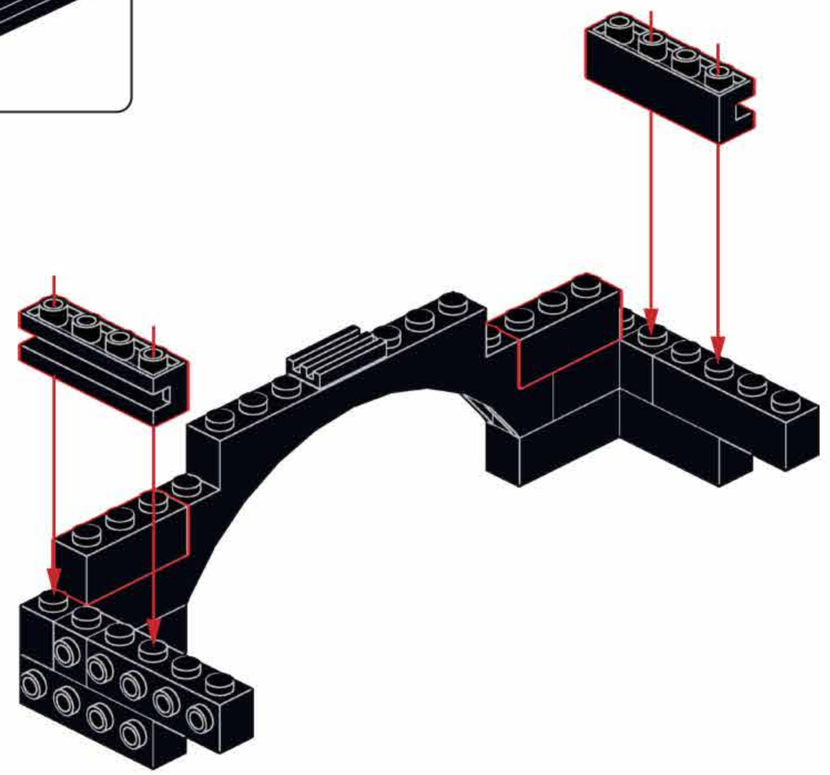

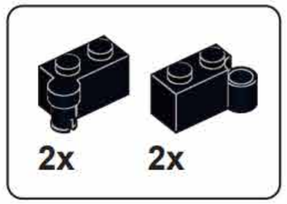

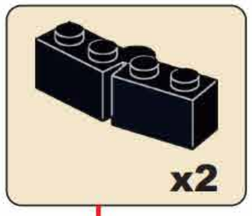

E61

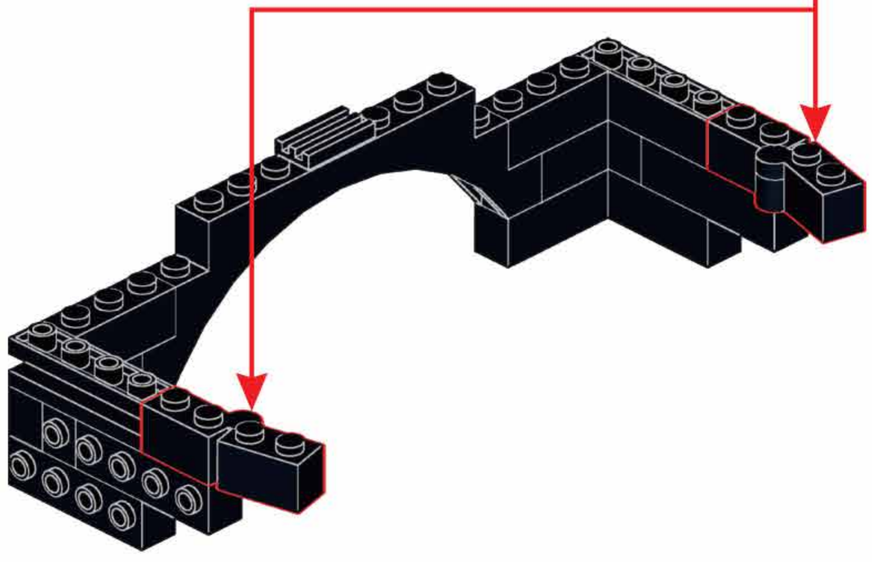

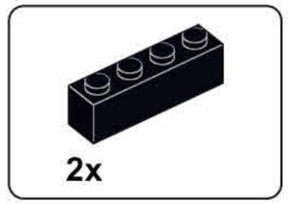

E62

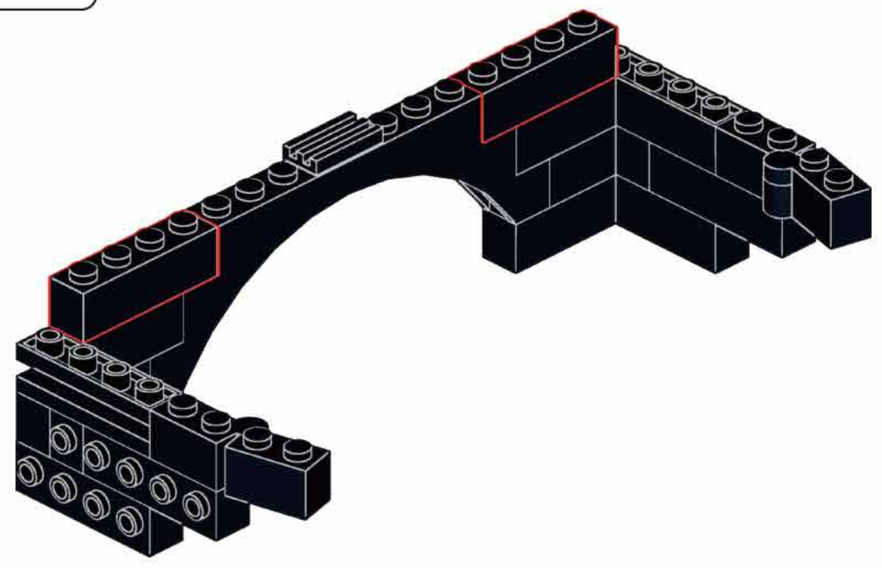

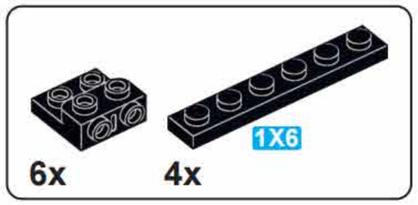

E63

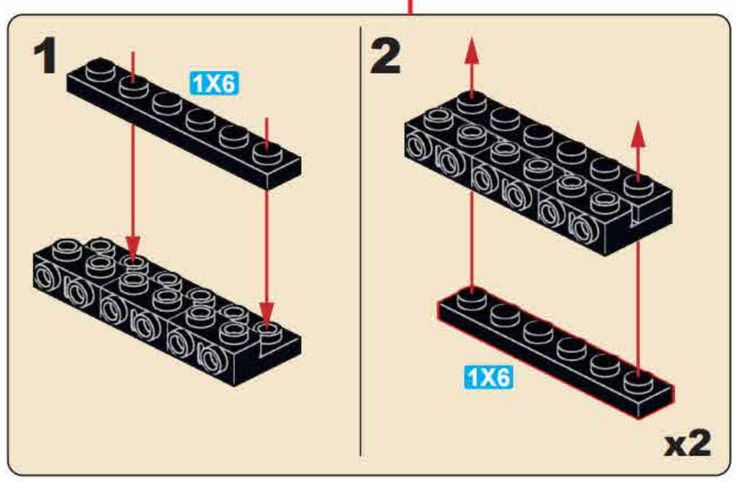

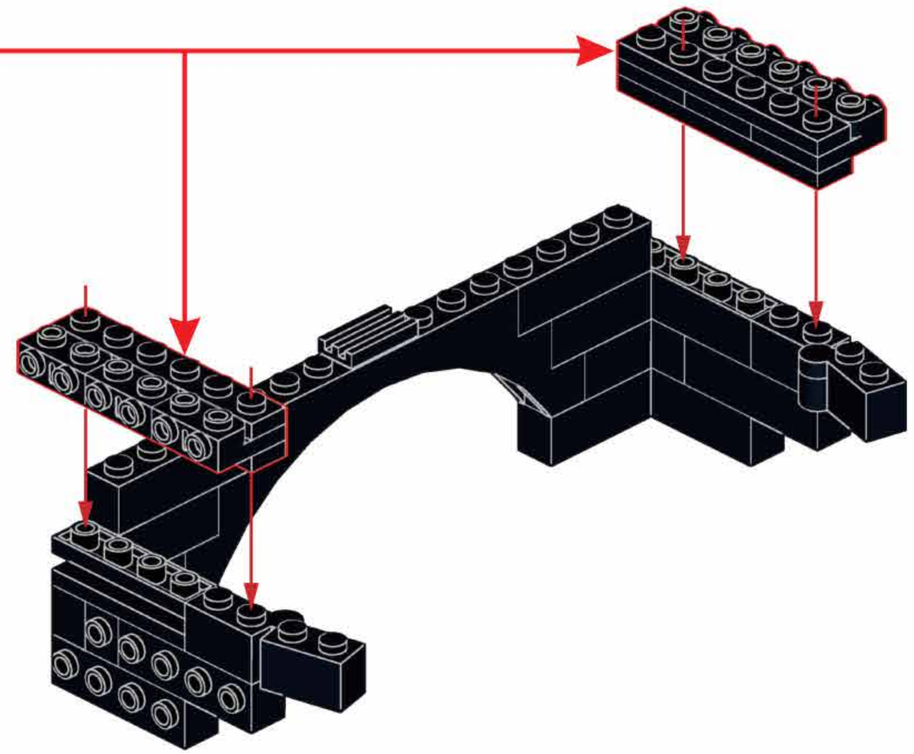

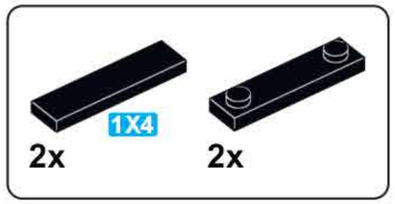

E64

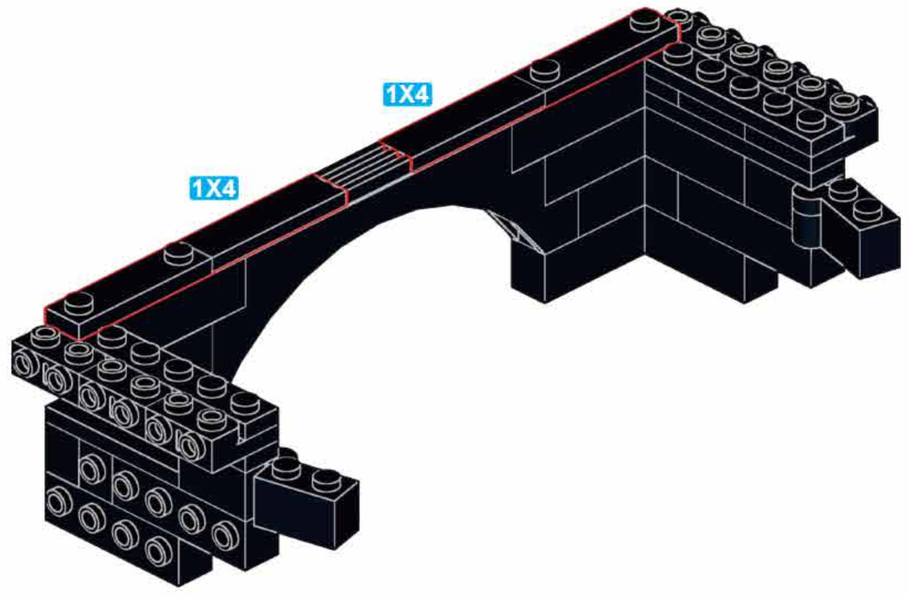

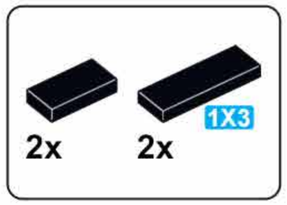

E65

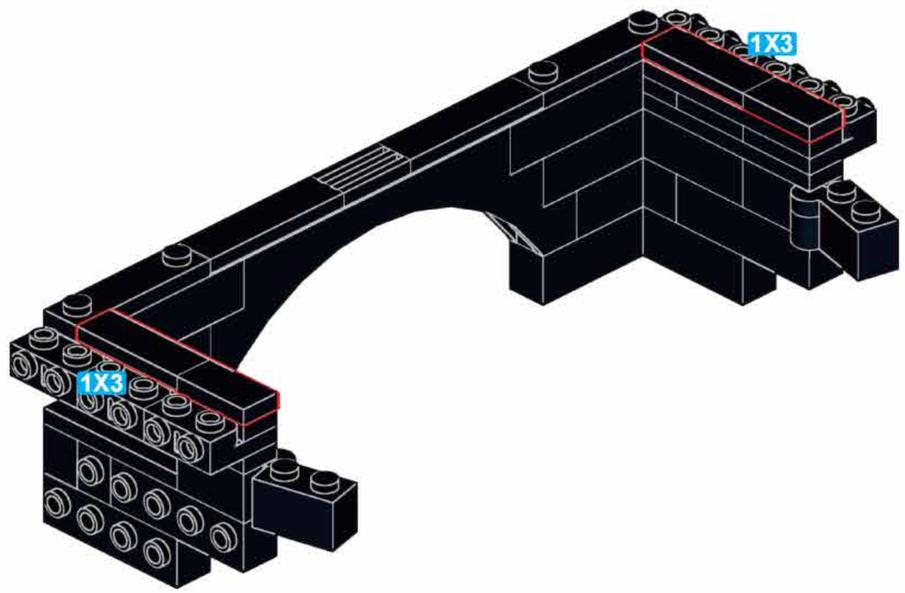

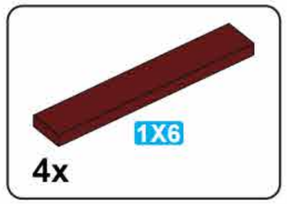

E66

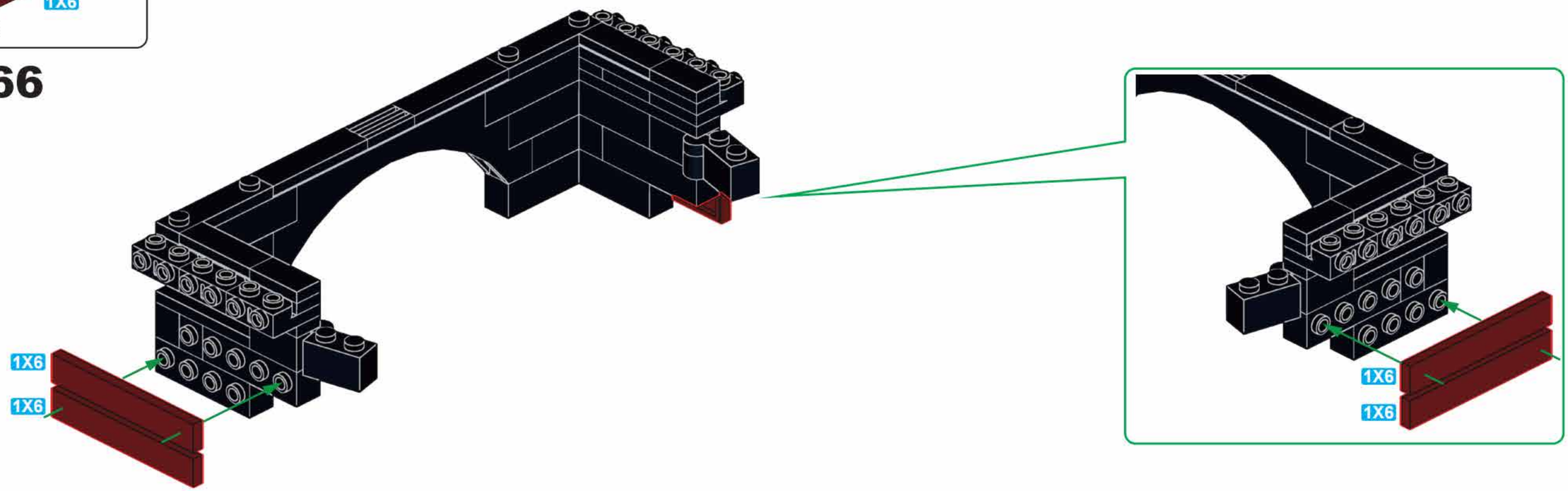

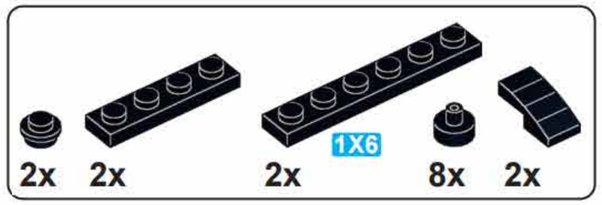

E67

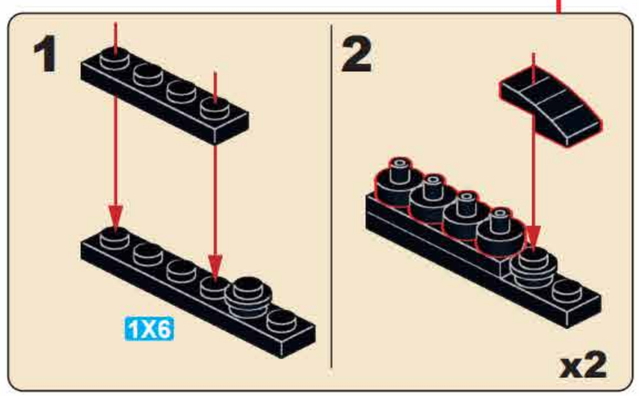

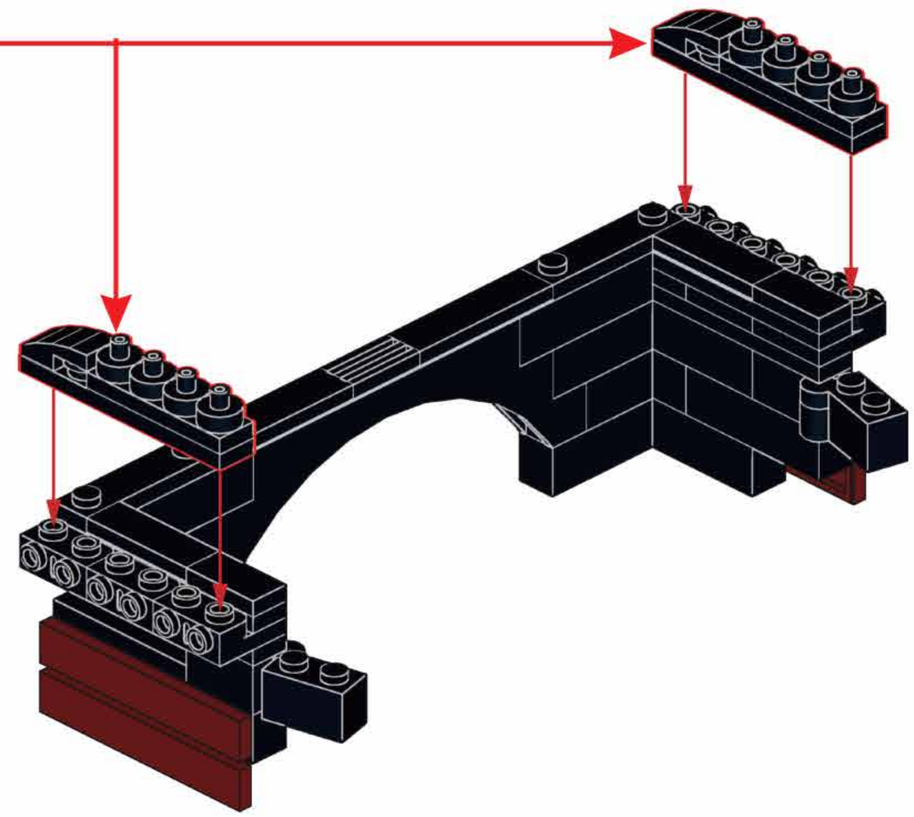

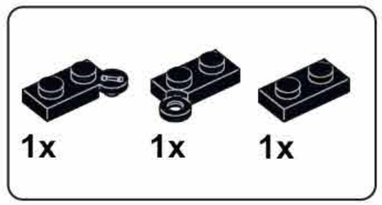

E68

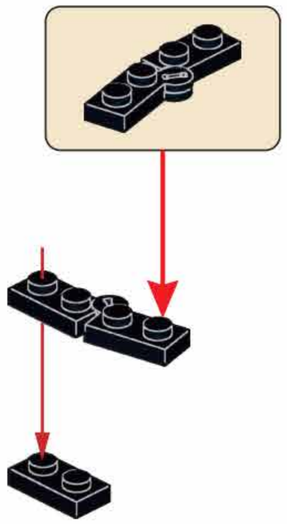

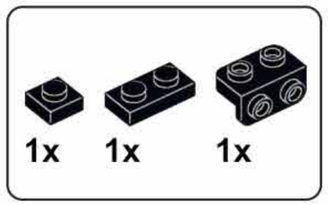

E69

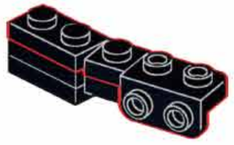

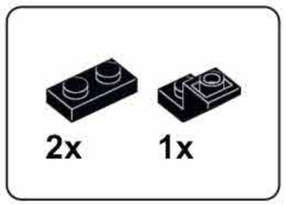

E70

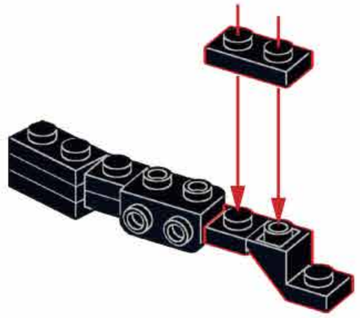

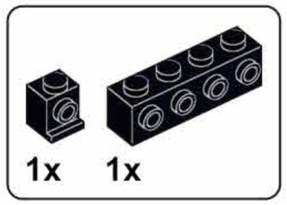

E71

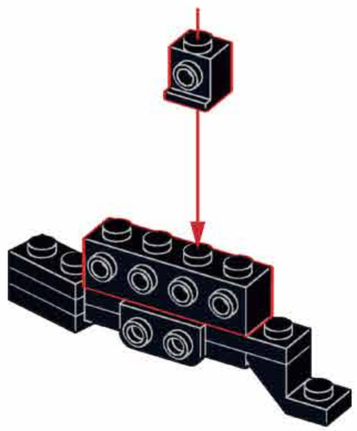

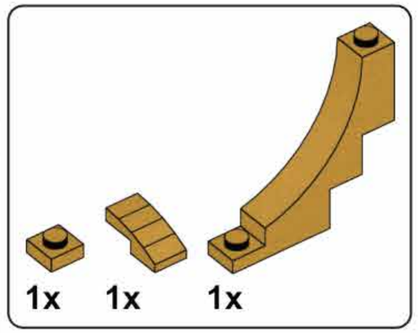

E72

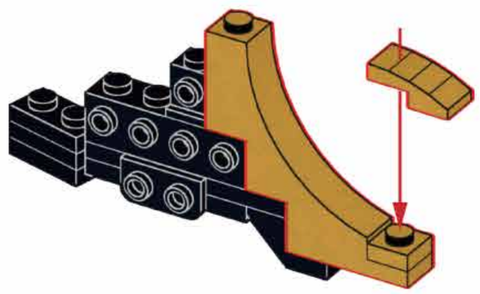

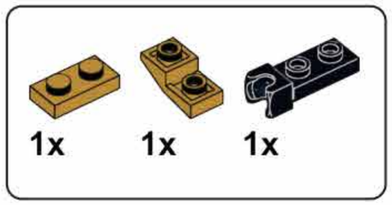

E73

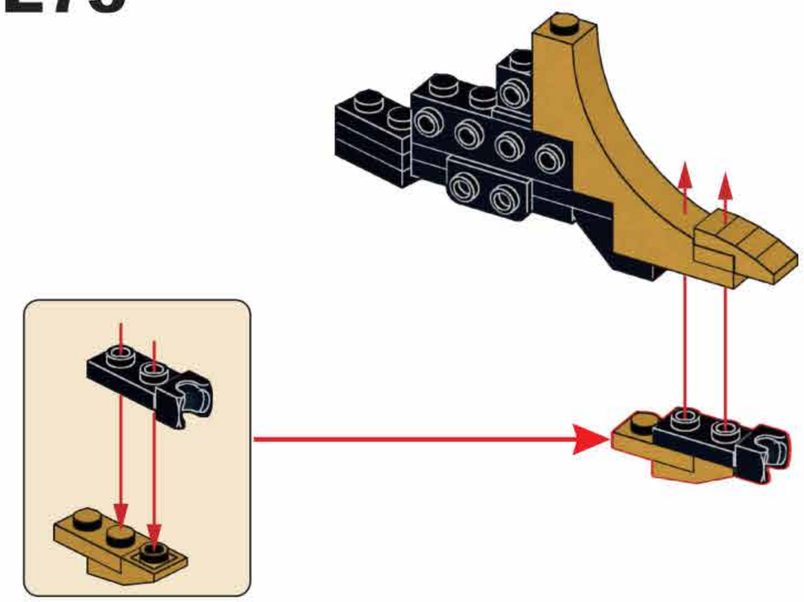

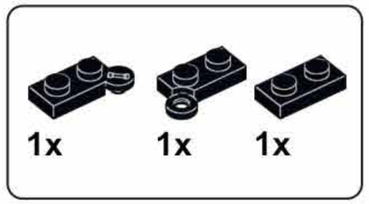

E74

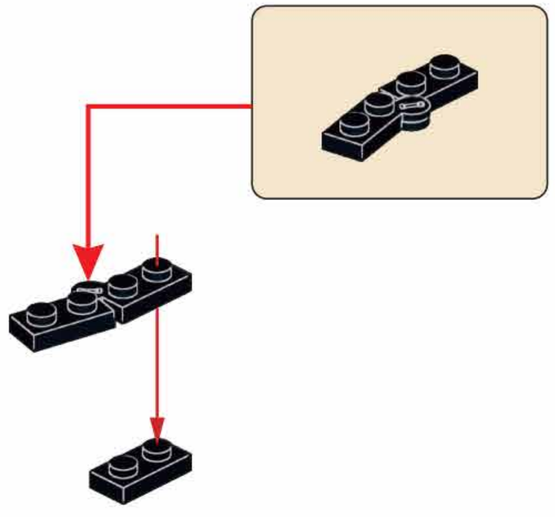

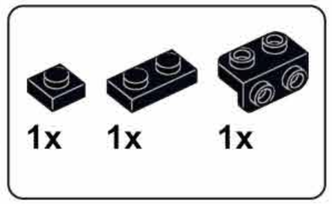

E75

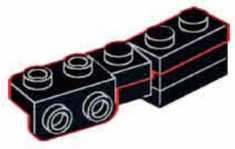

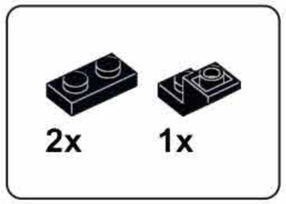

E76

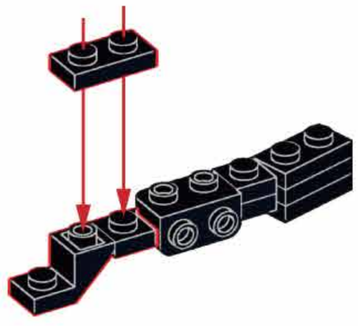

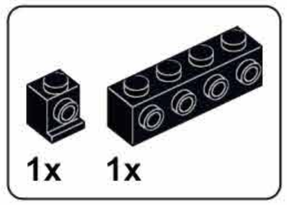

E77

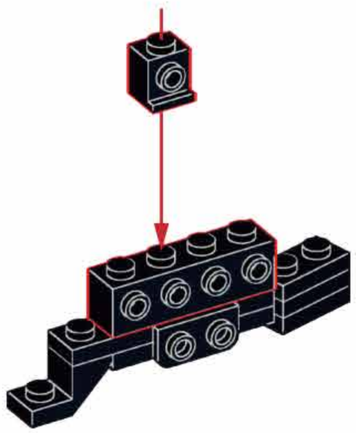

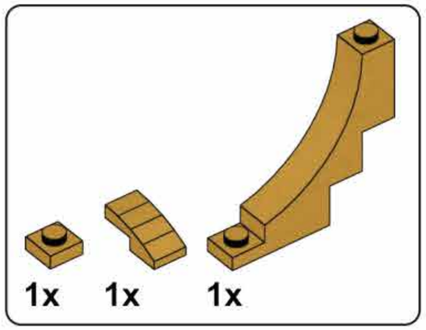

E78

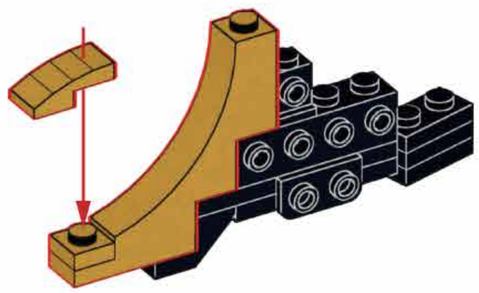

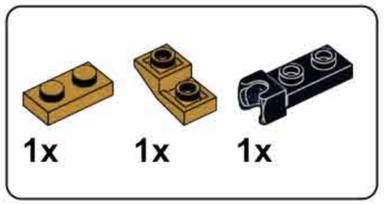

E79

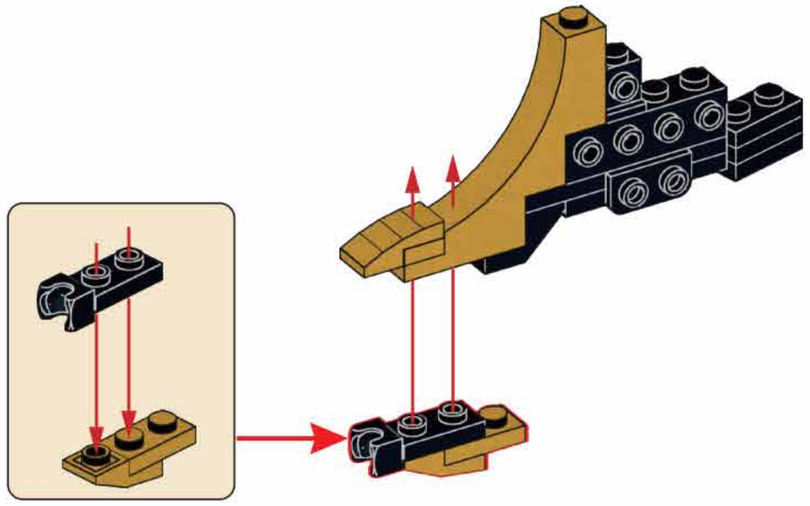

E80

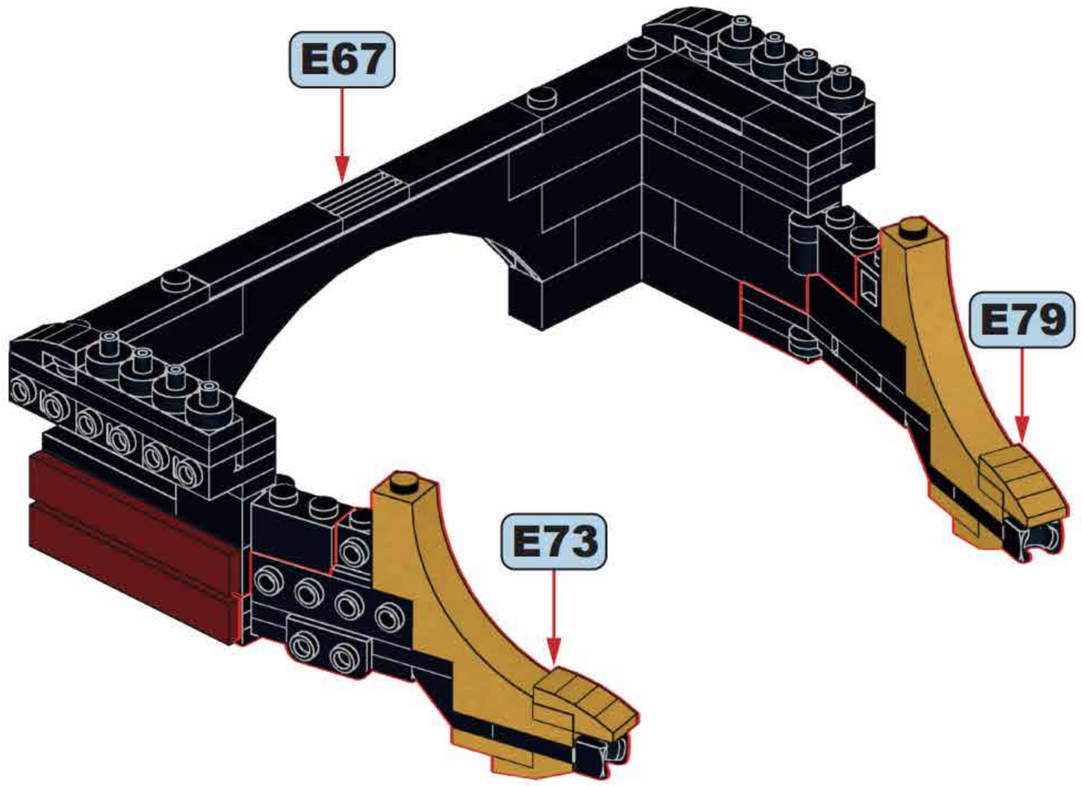

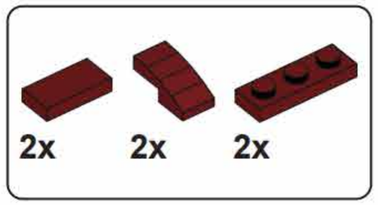

E81

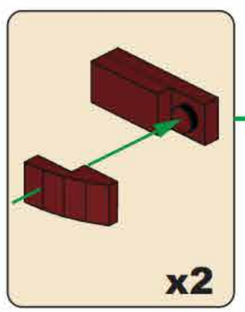

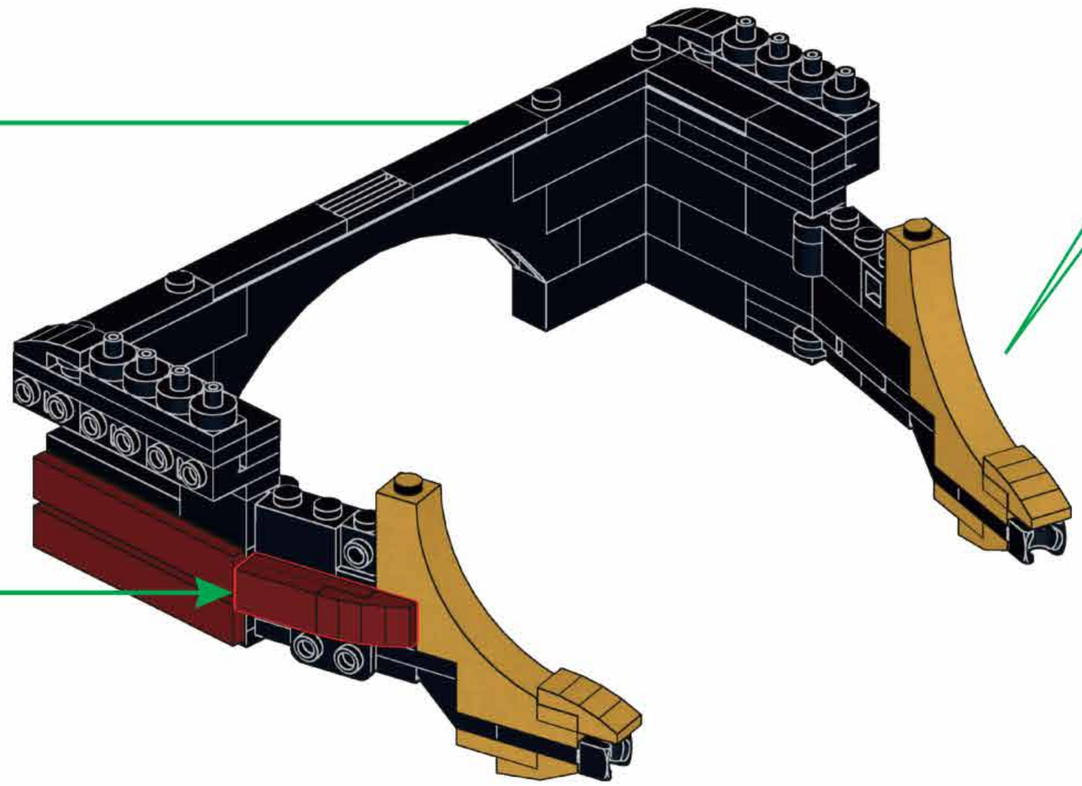

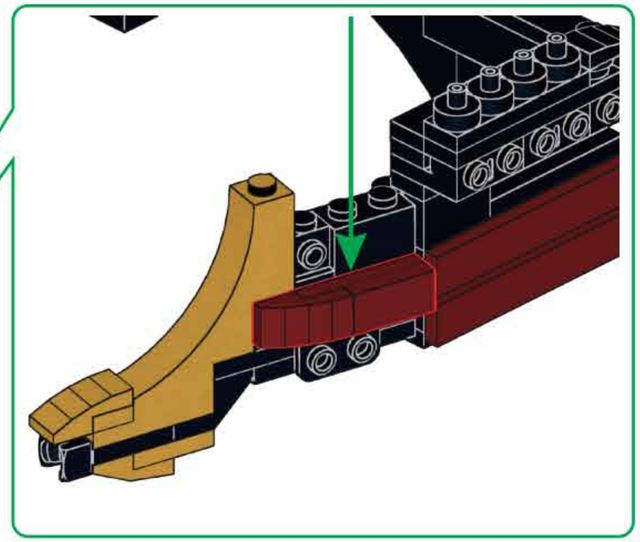

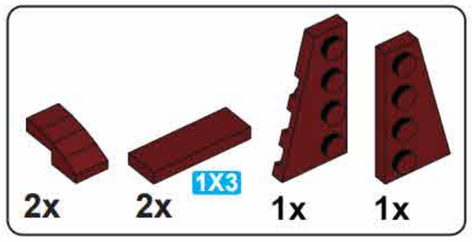

E82

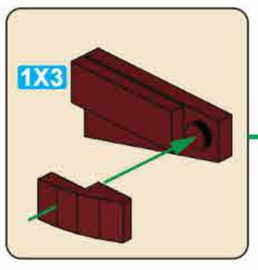

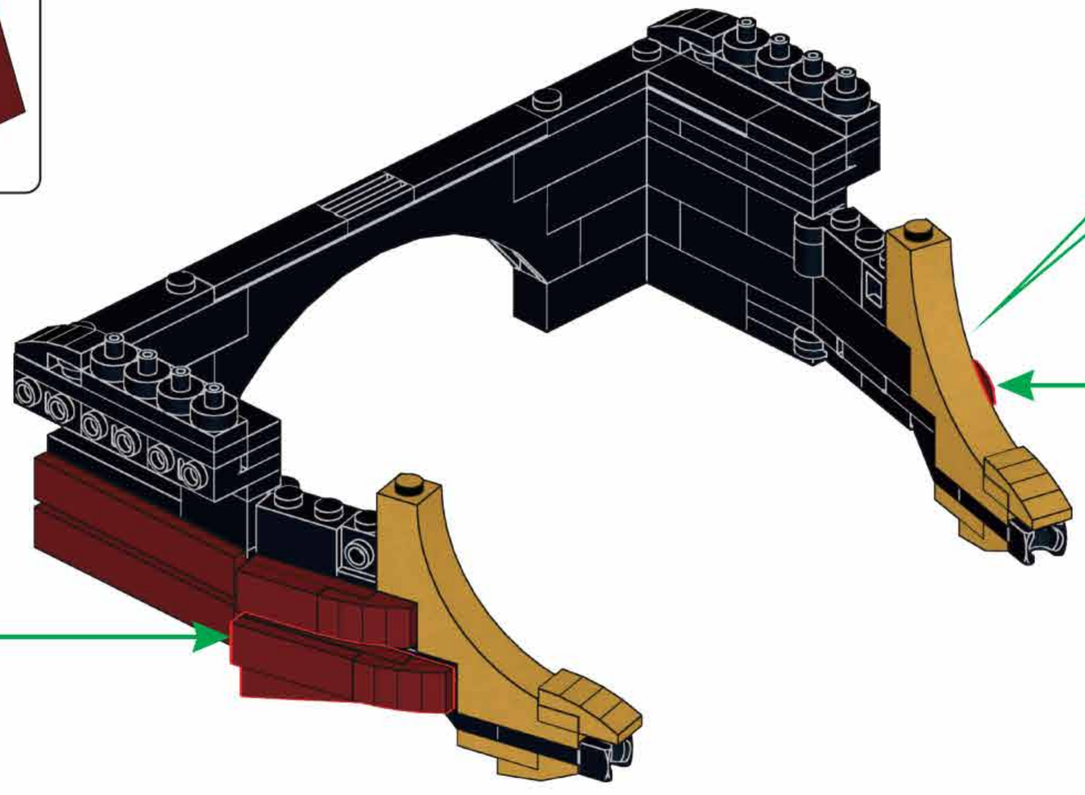

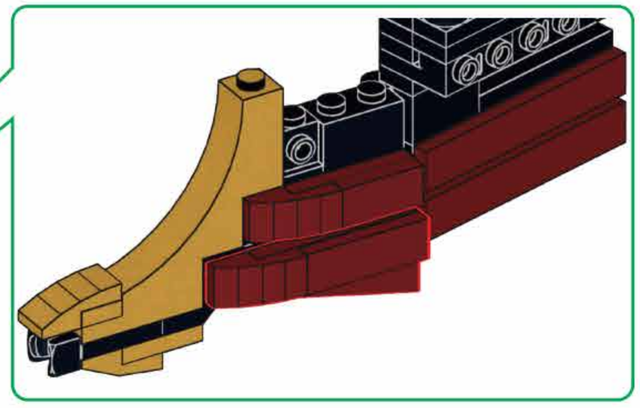

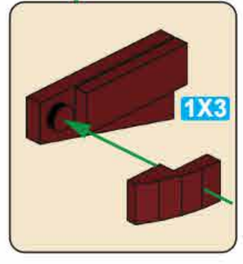

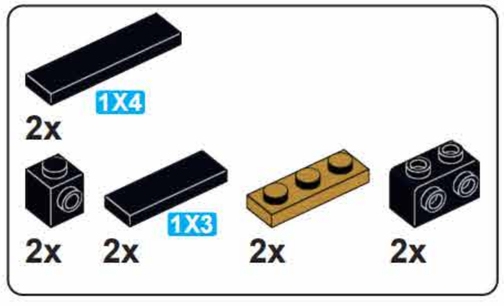

E83

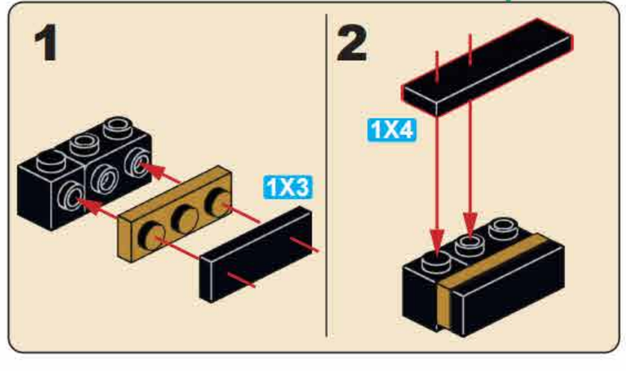

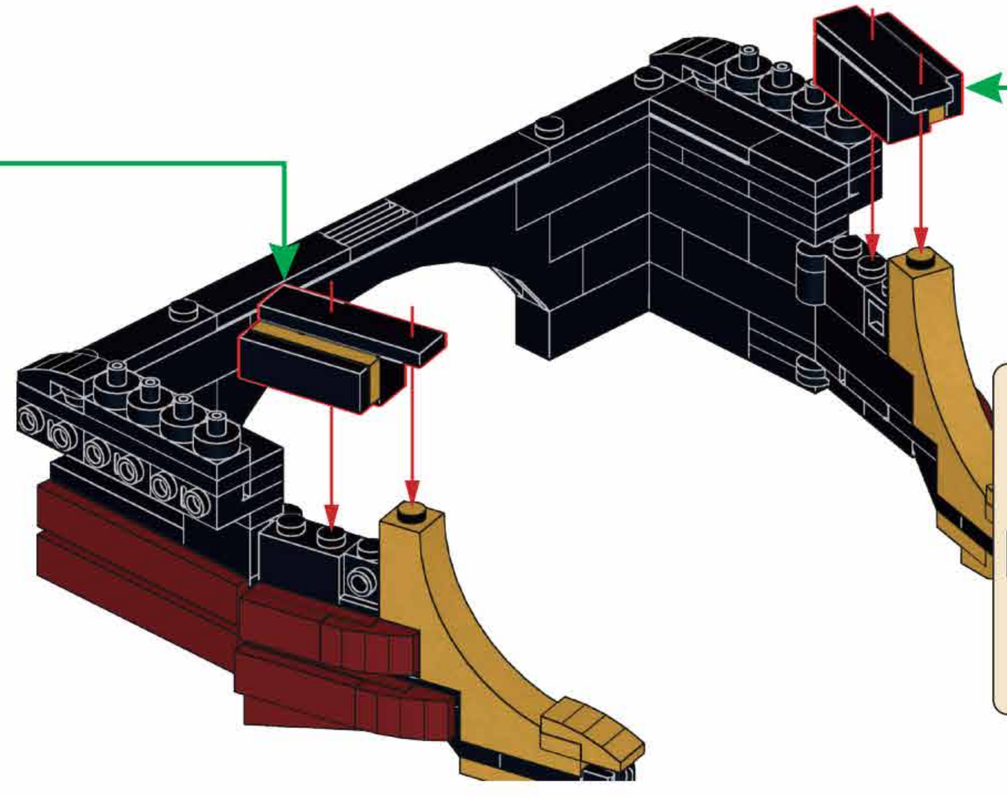

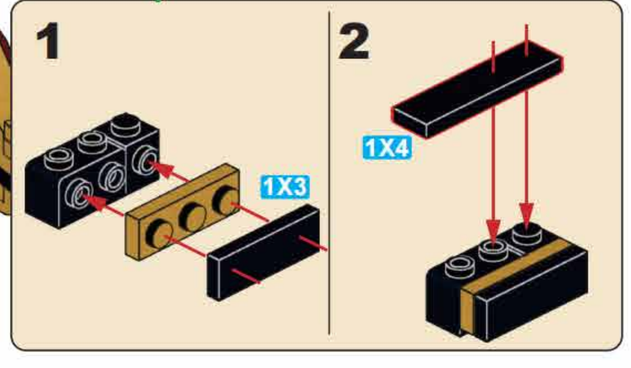

E84

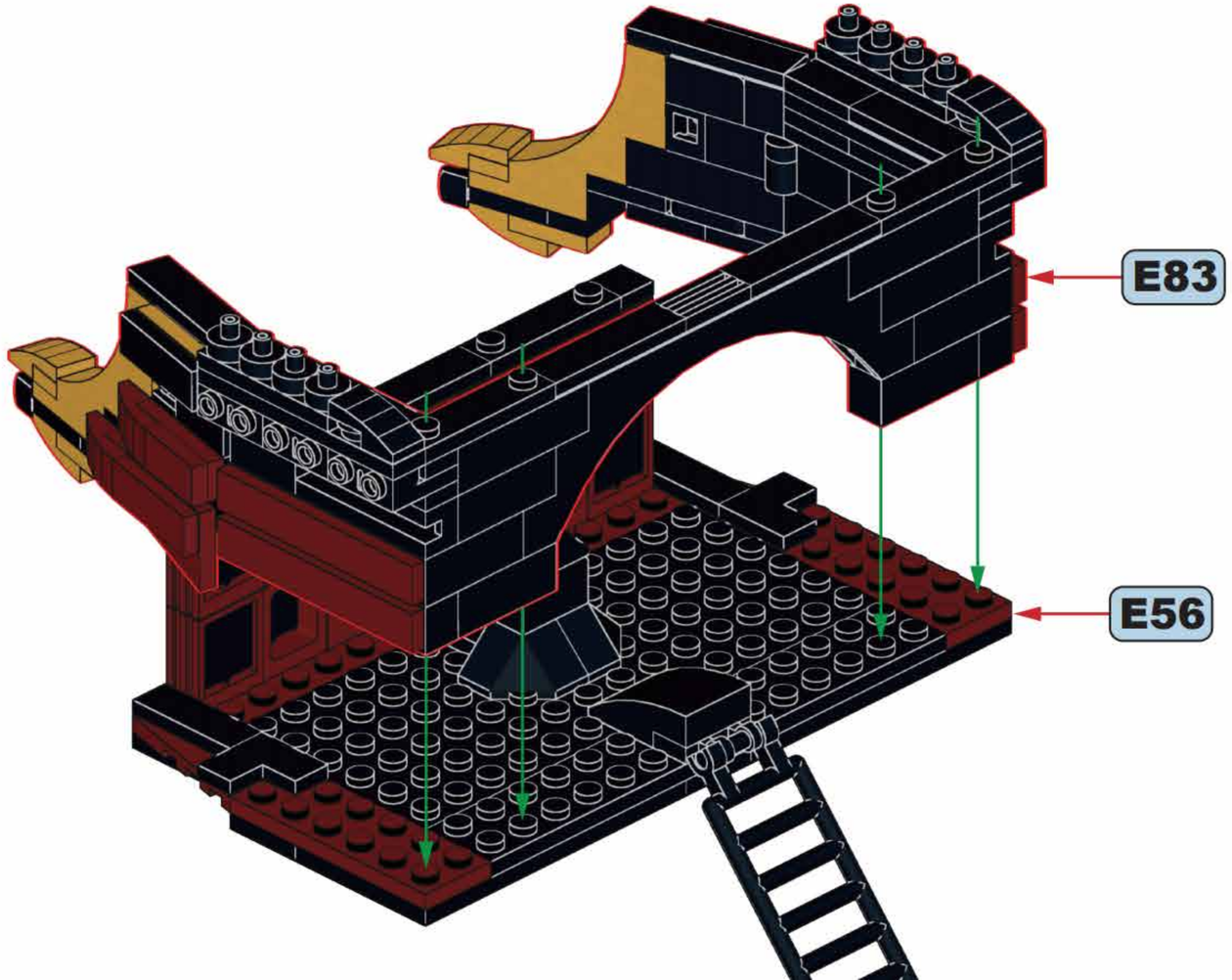

E85

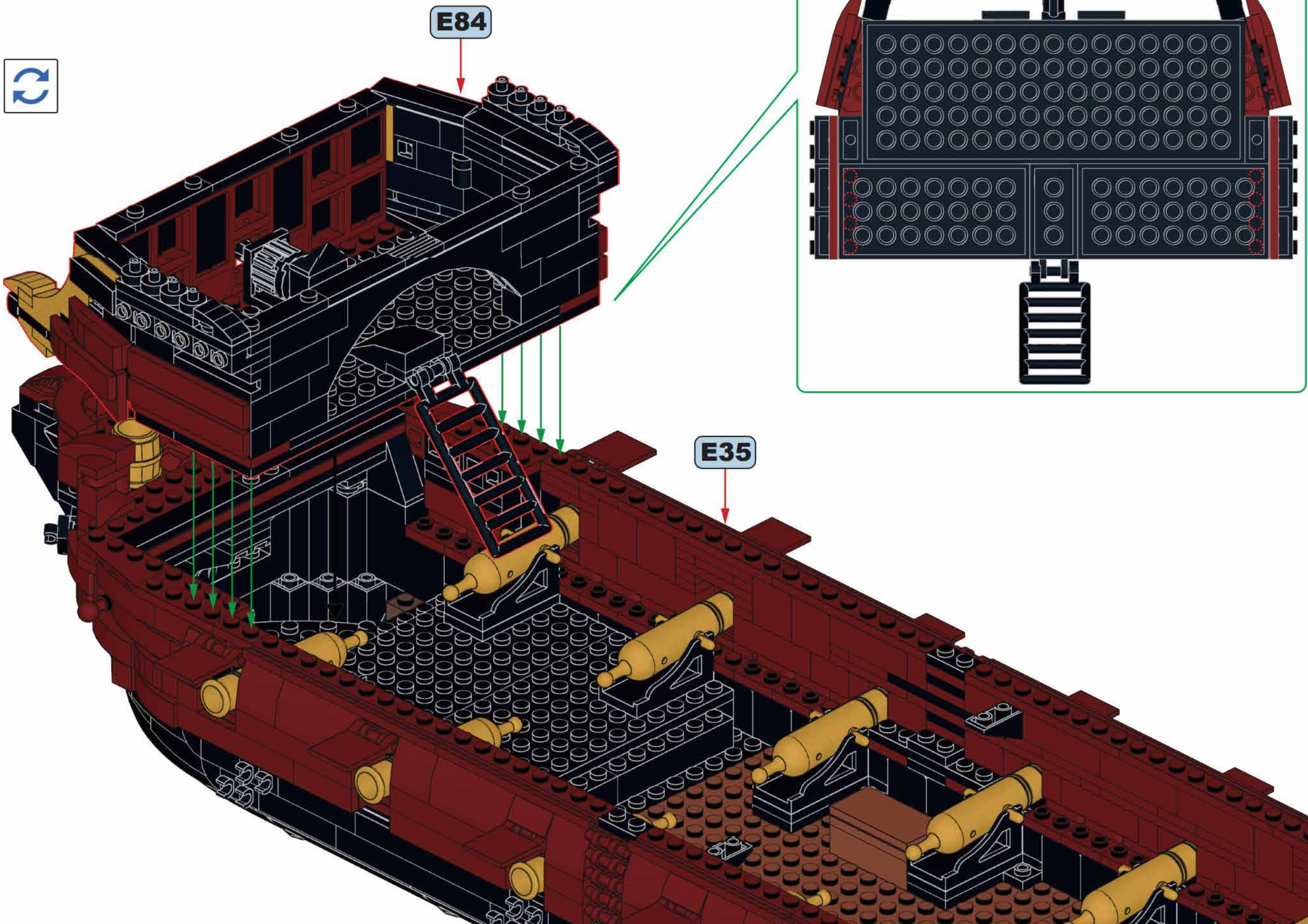

6

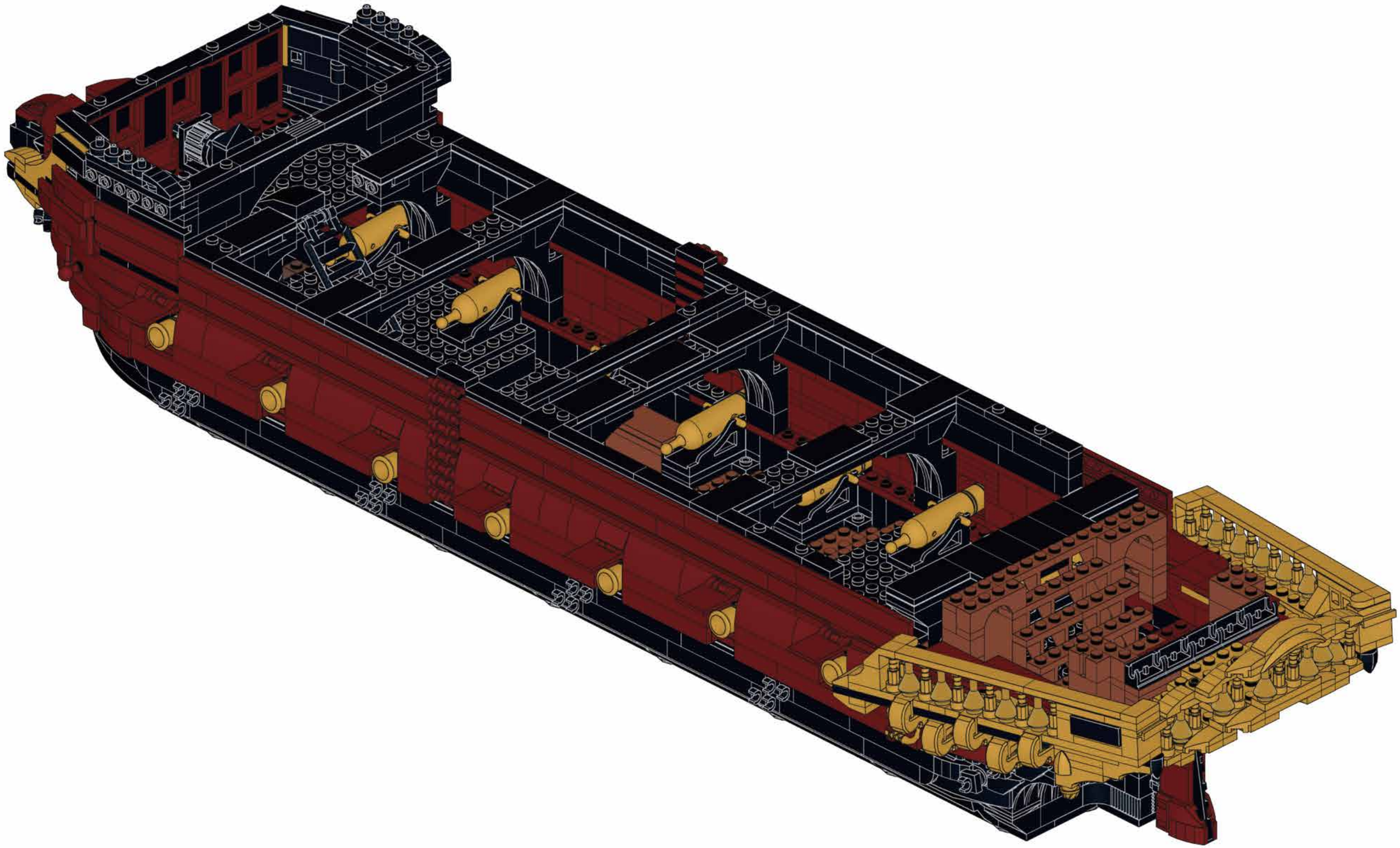

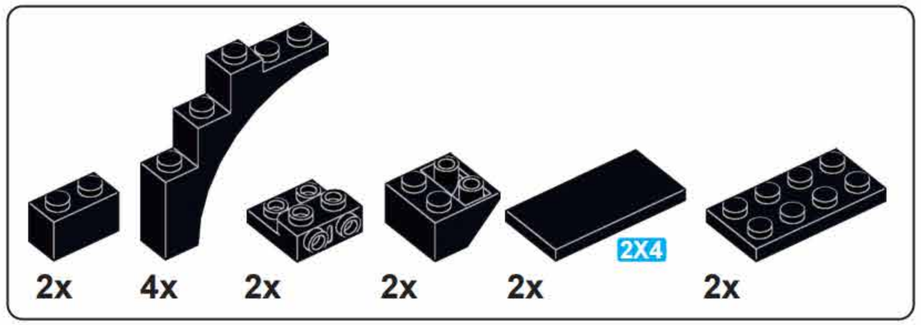

F1

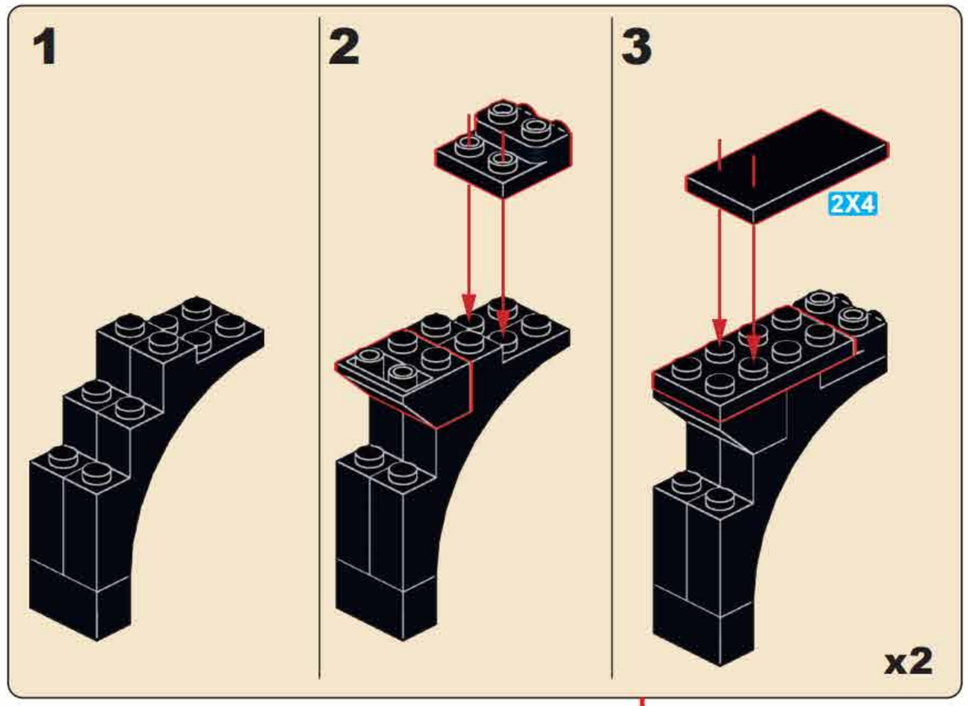

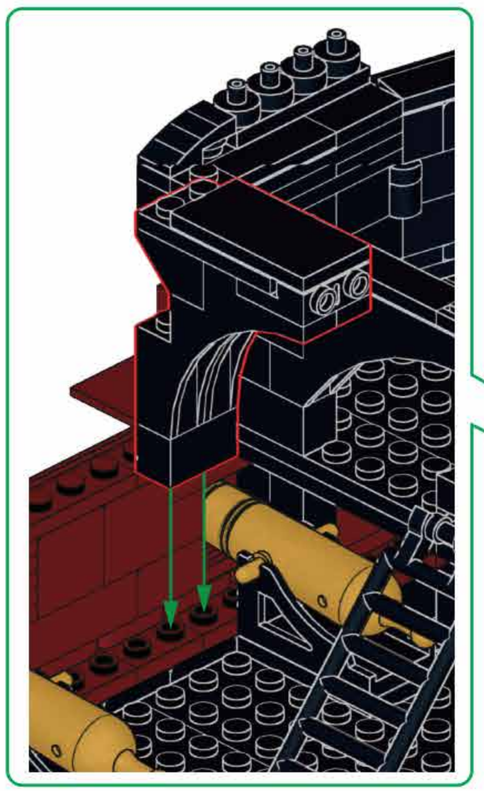

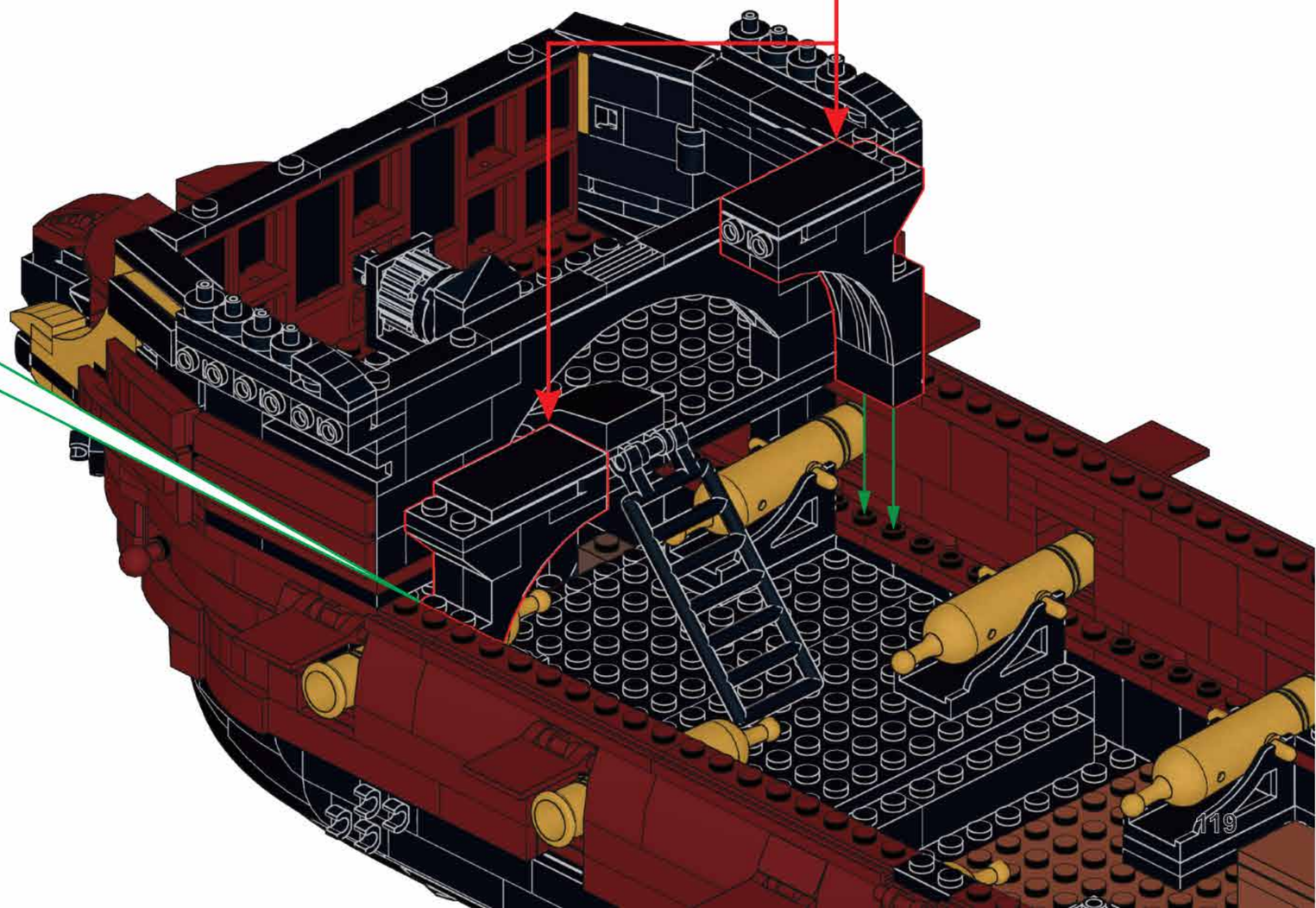

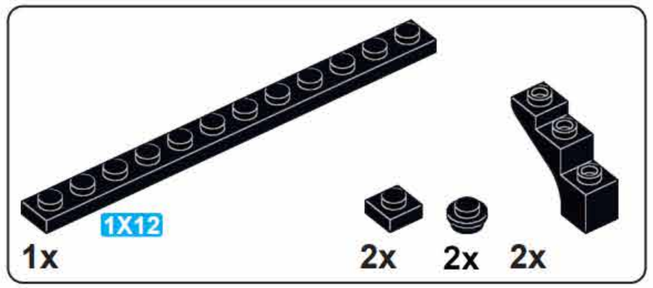

F2

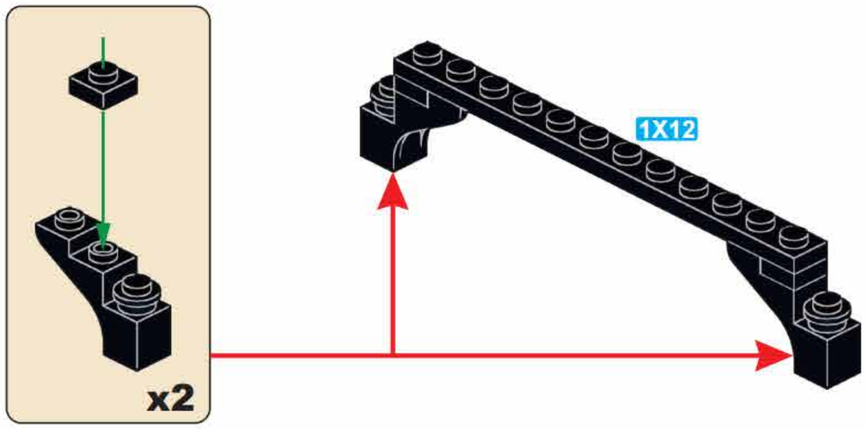

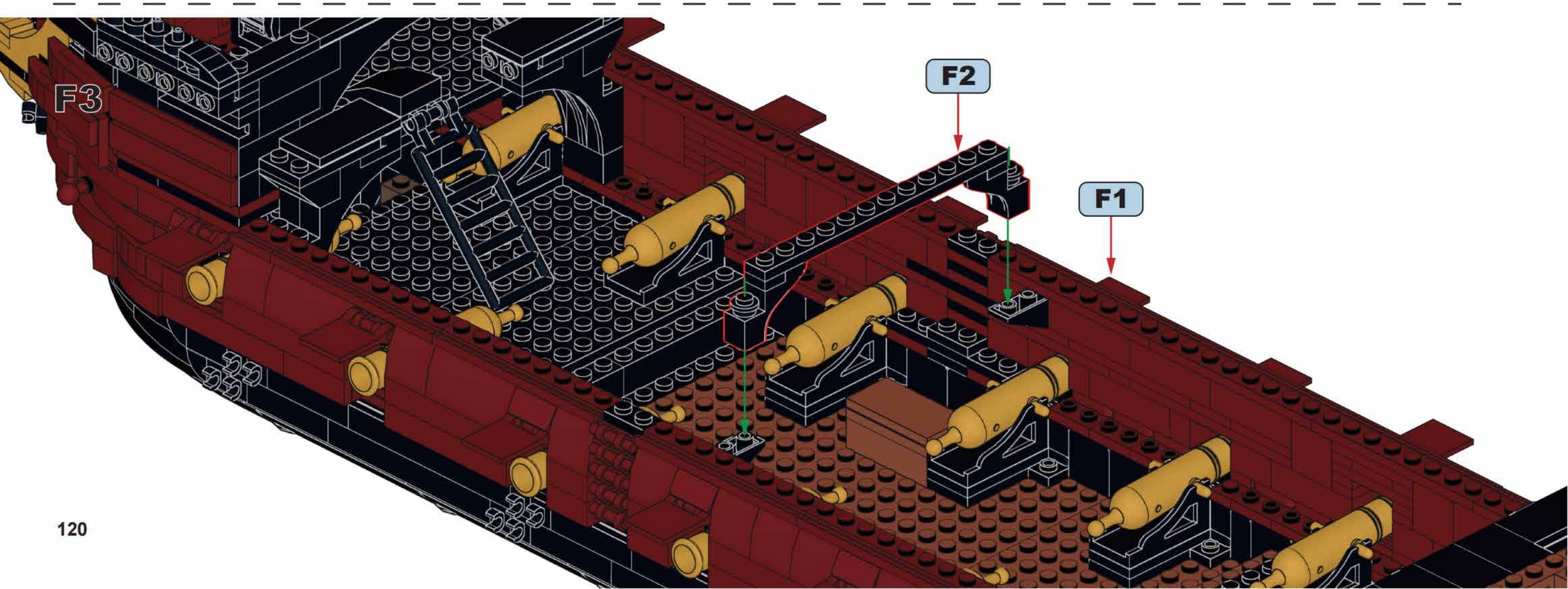

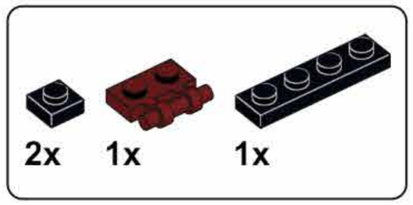

F4

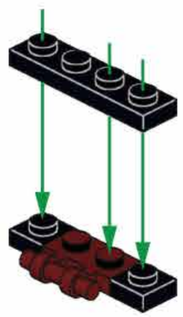

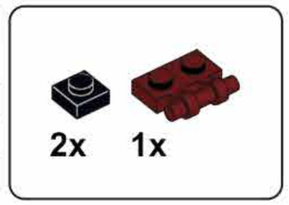

F5

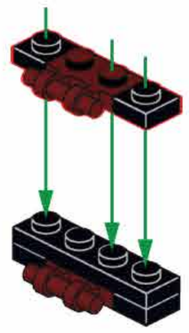

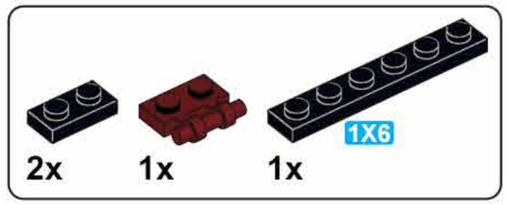

F6

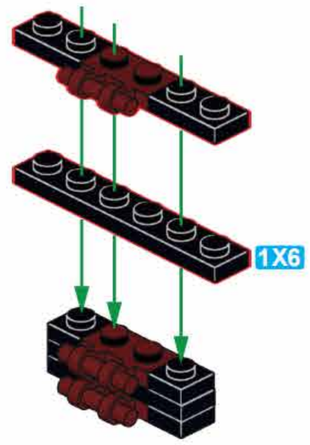

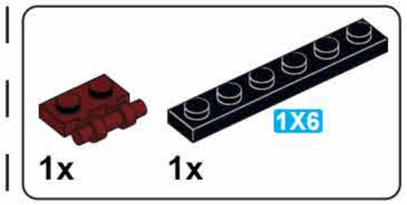

F7

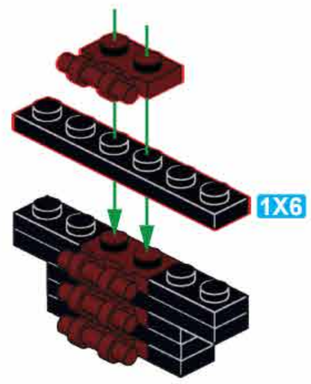

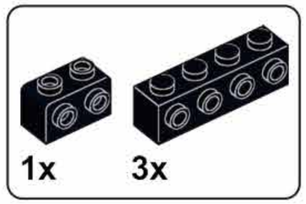

F8

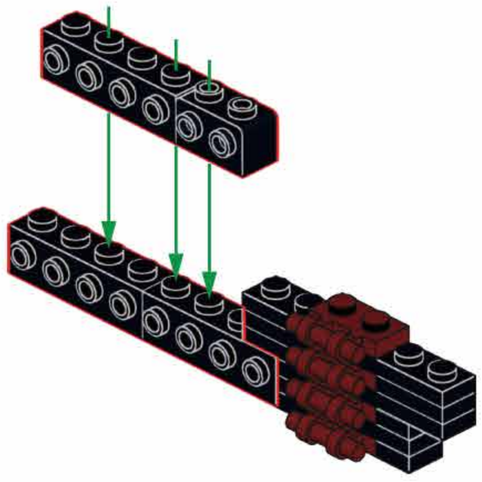

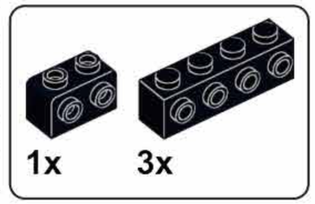

F9

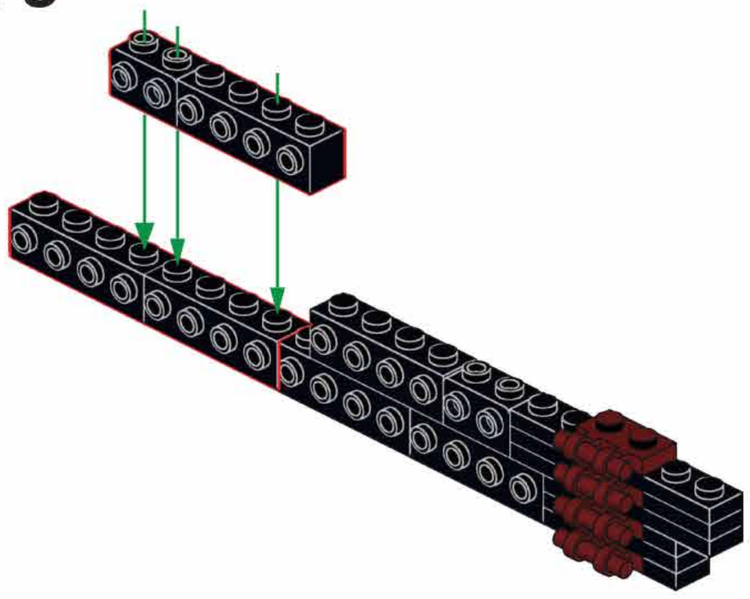

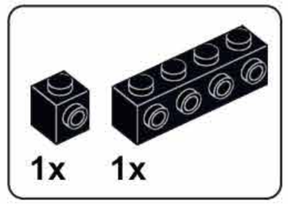

F10

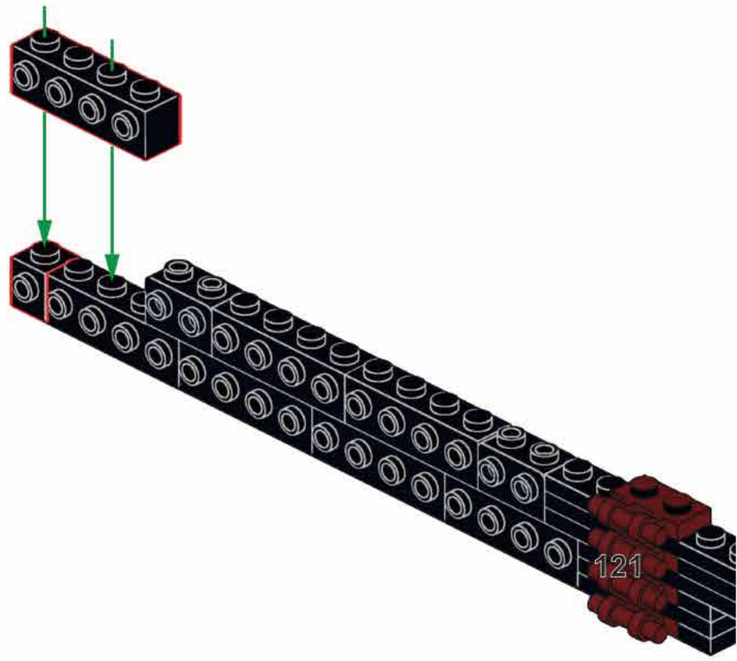

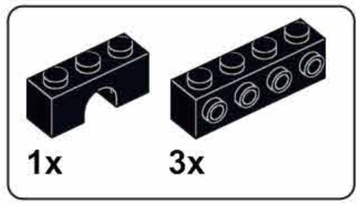

F11

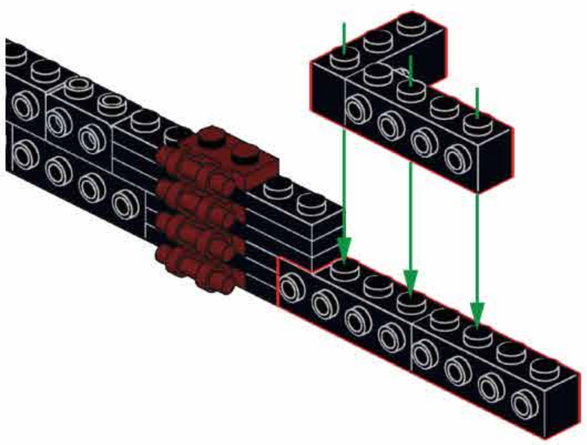

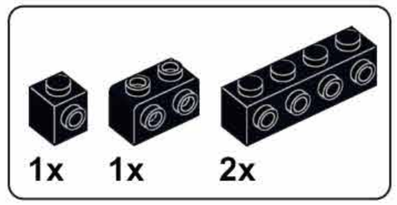

F12

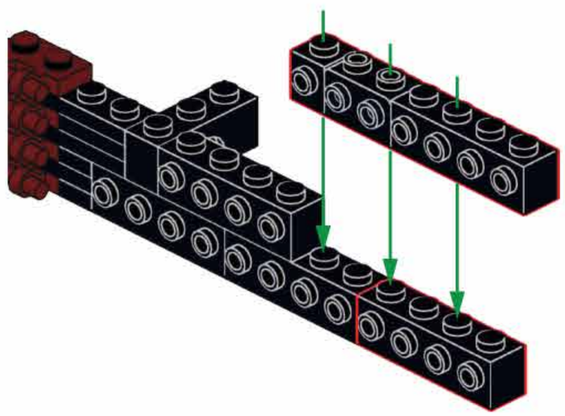

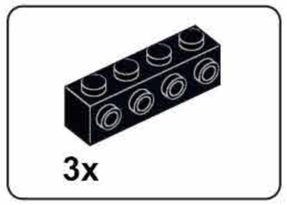

F13

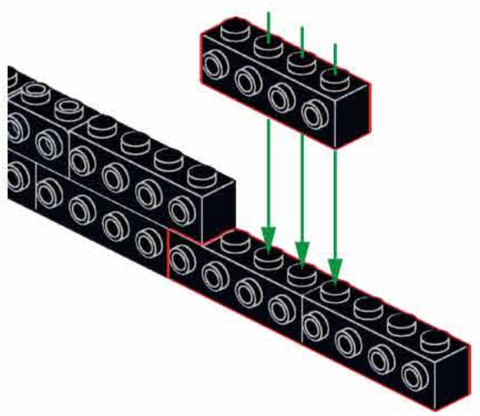

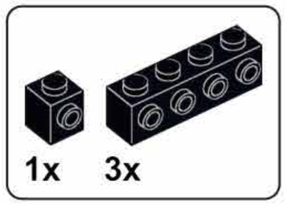

F14

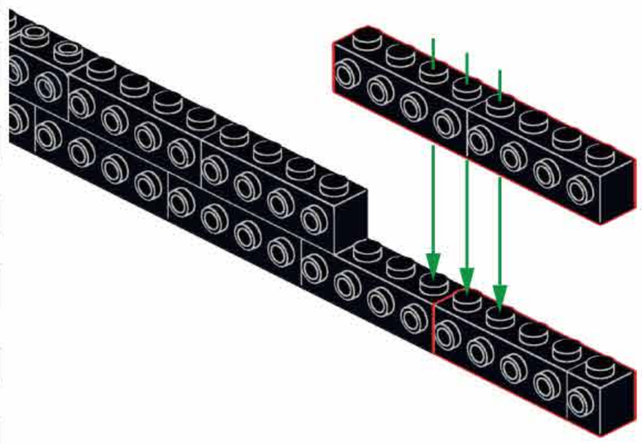

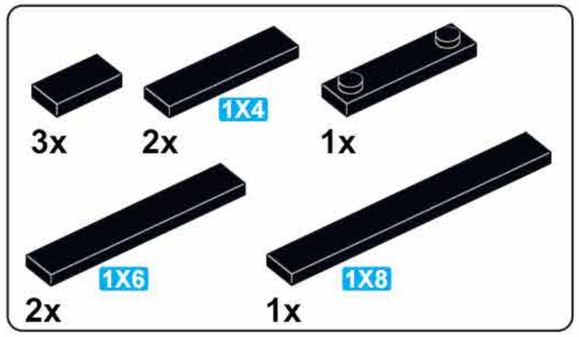

F15

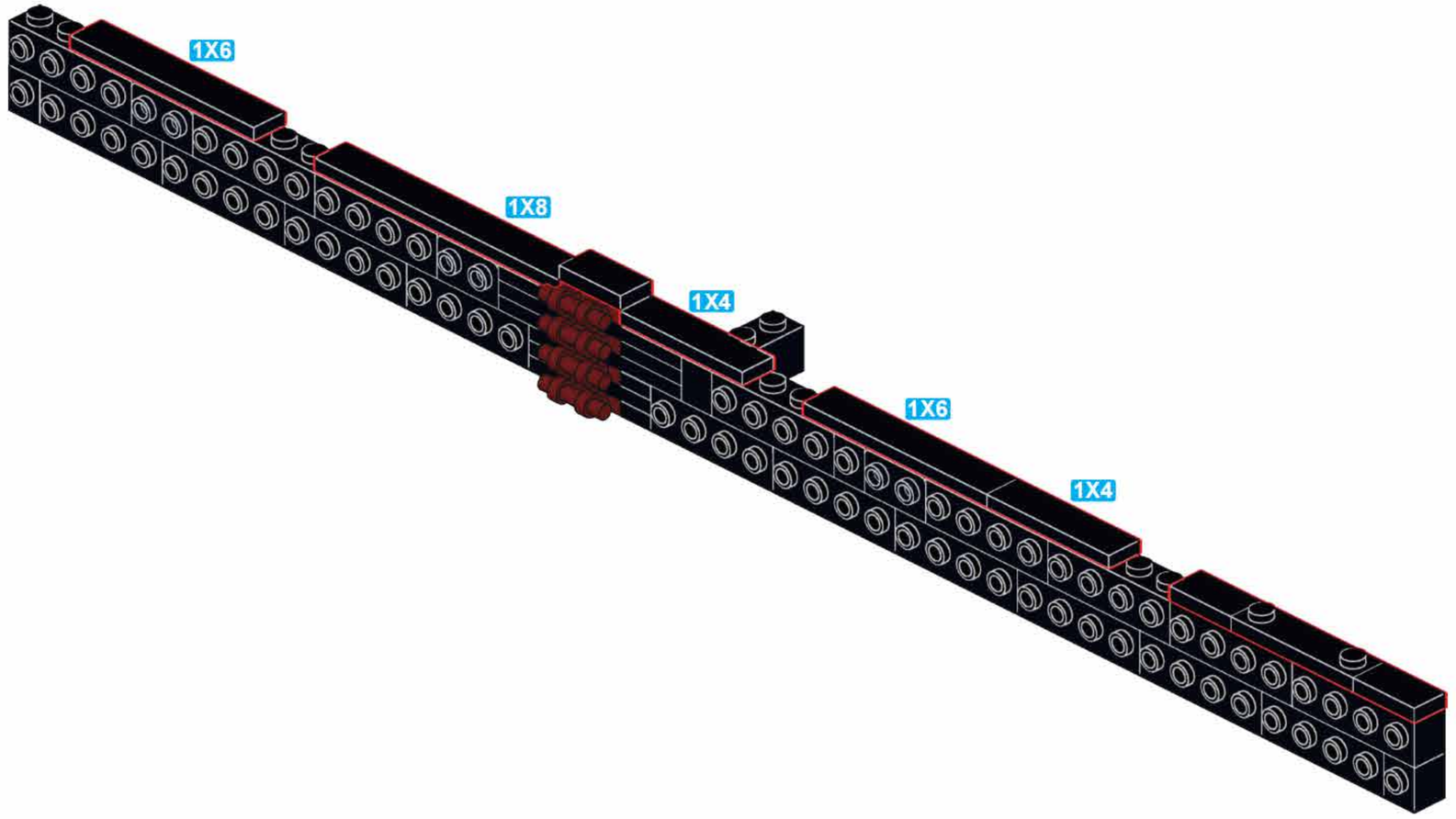

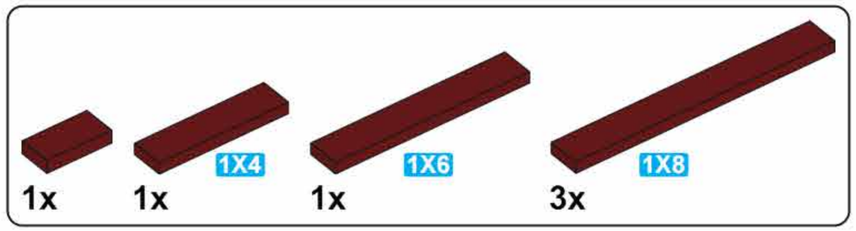
1x
1x
1X4
1x
1X6
3x
1X8

F16

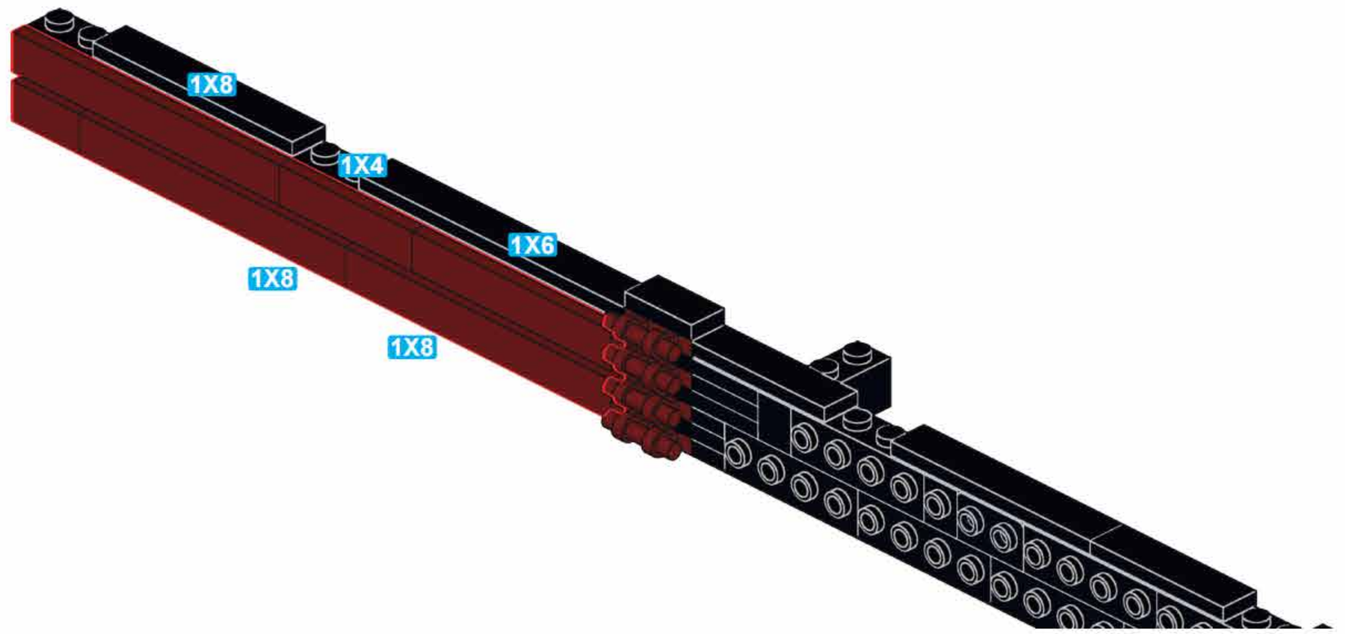
1X8
1X4
1X6
1X8
1X8

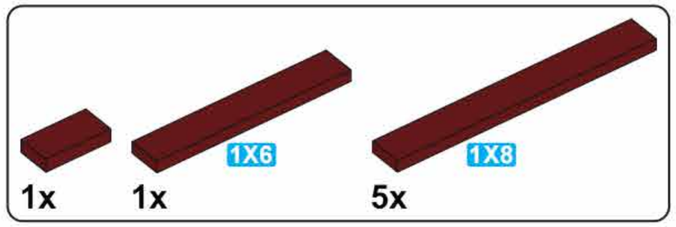
1x
1x
1X6
5x
1X8

F17

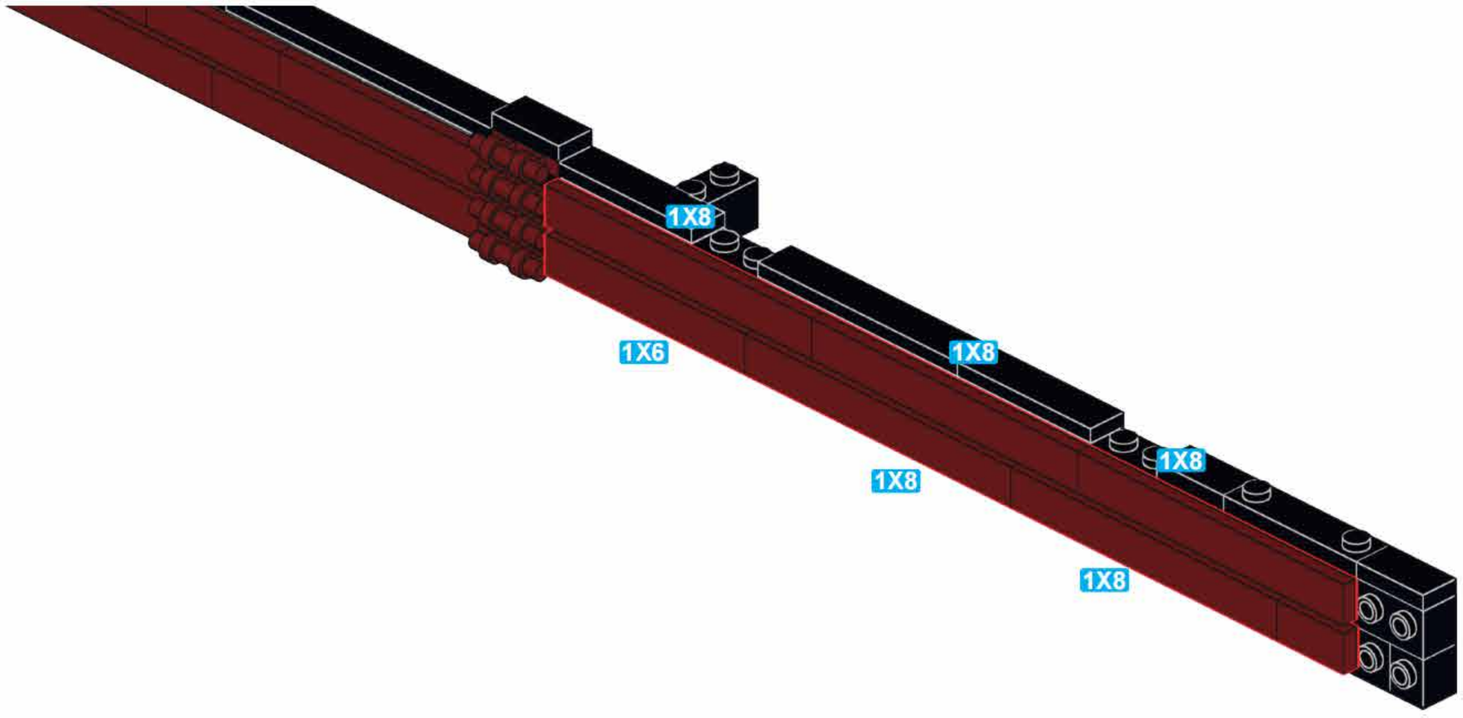
1X8
1X6
1X8
1X8
1X8
1X8

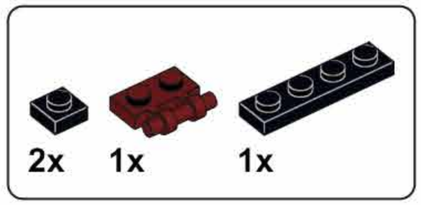

F18

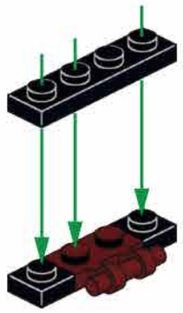

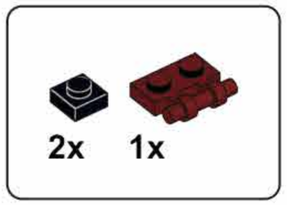

F19

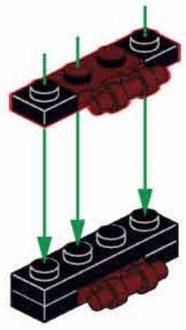

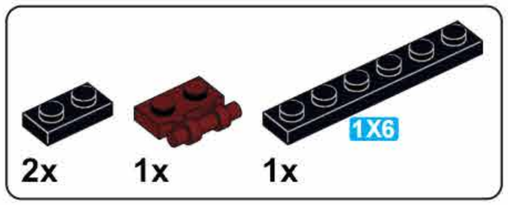

F20

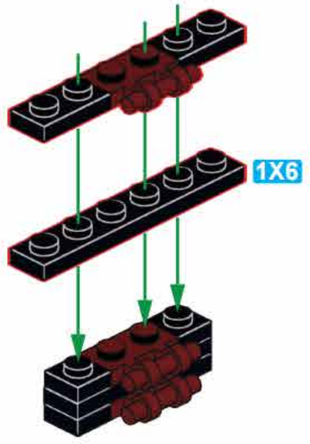

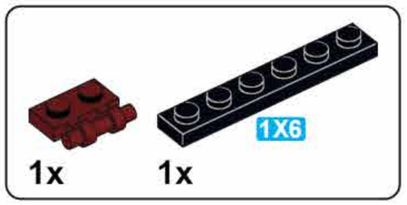

F21

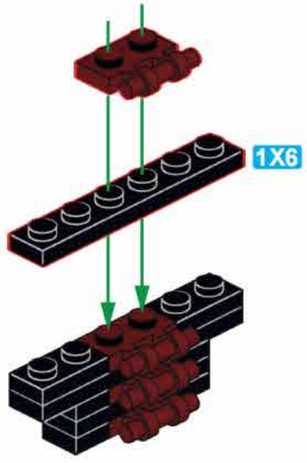

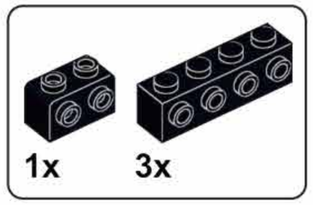

F22

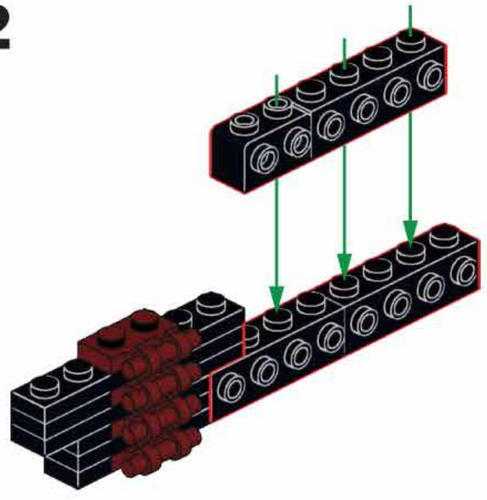

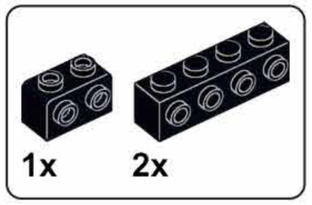

F23

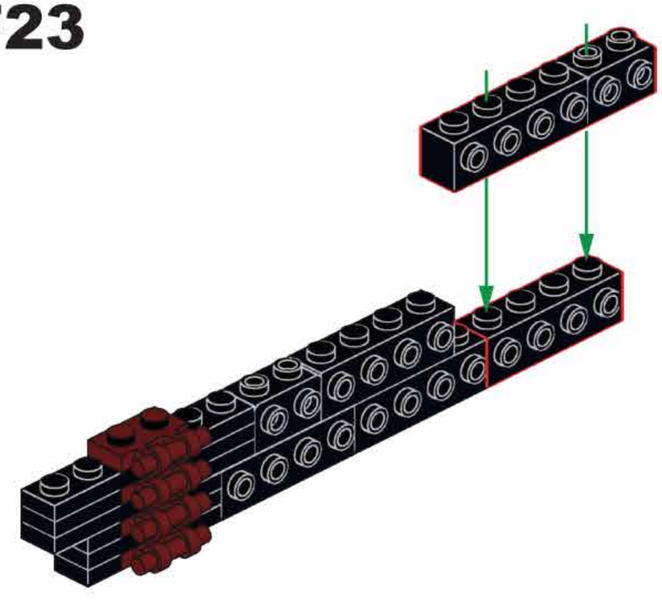

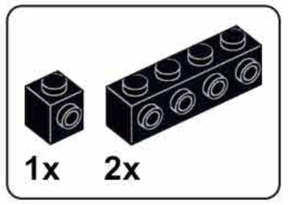

F24

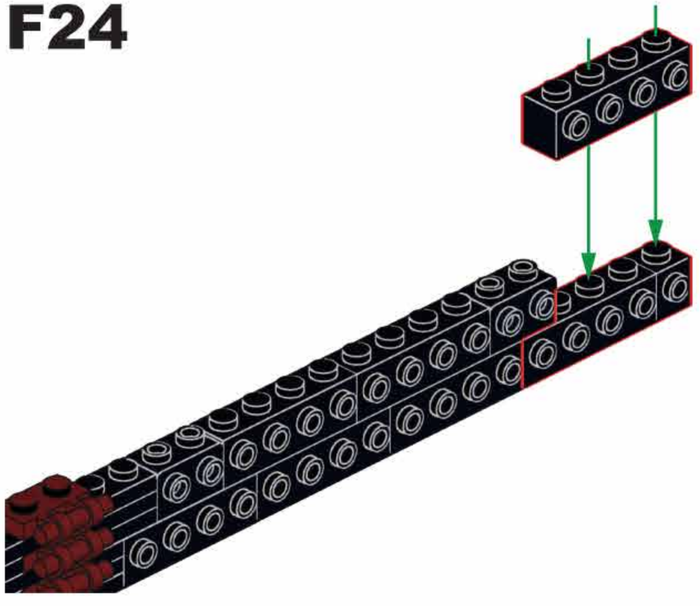

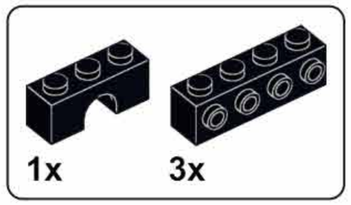

F25

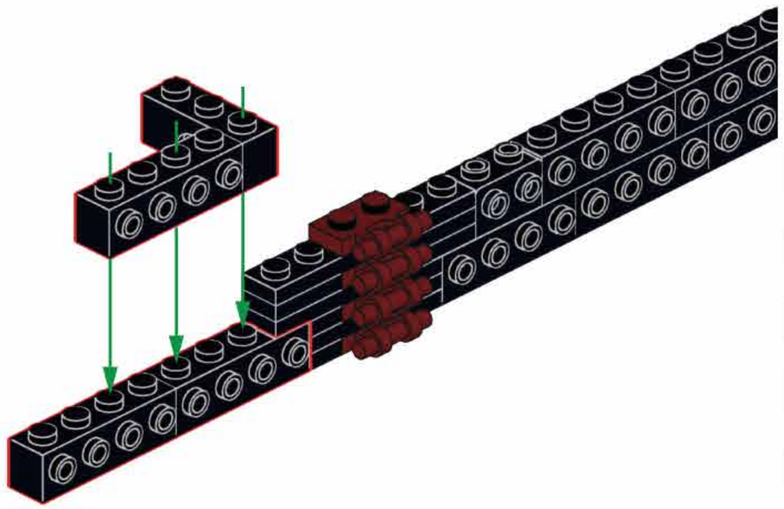

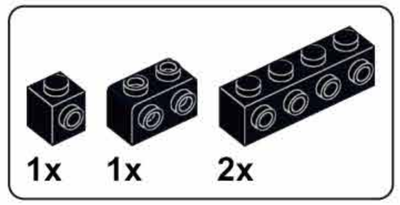

F26

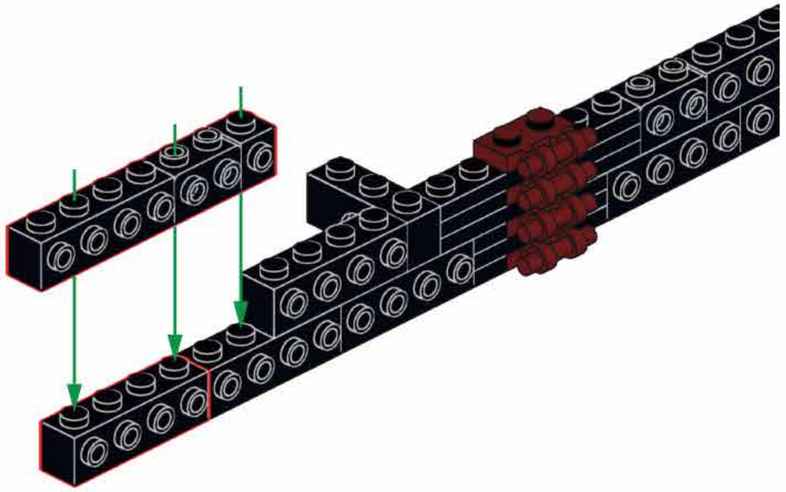

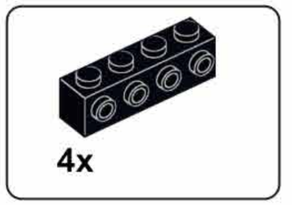

F27

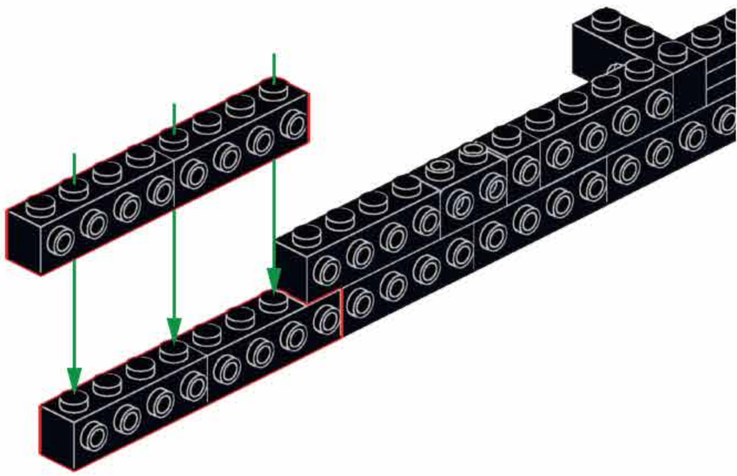

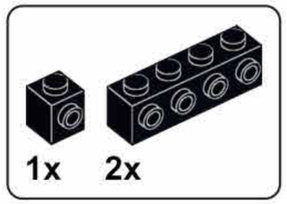

F28

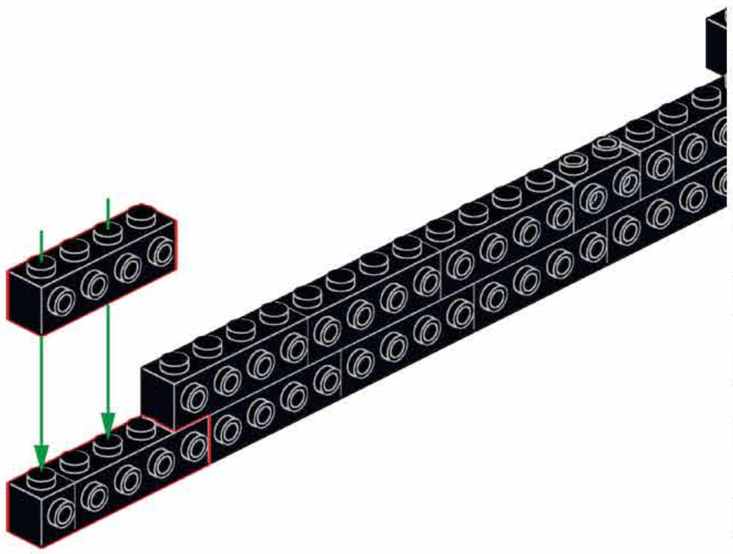

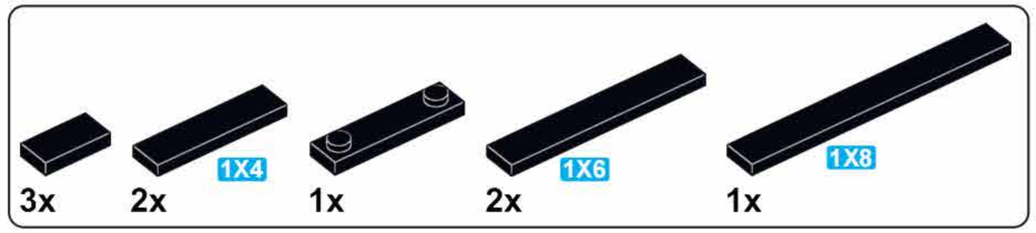

F29

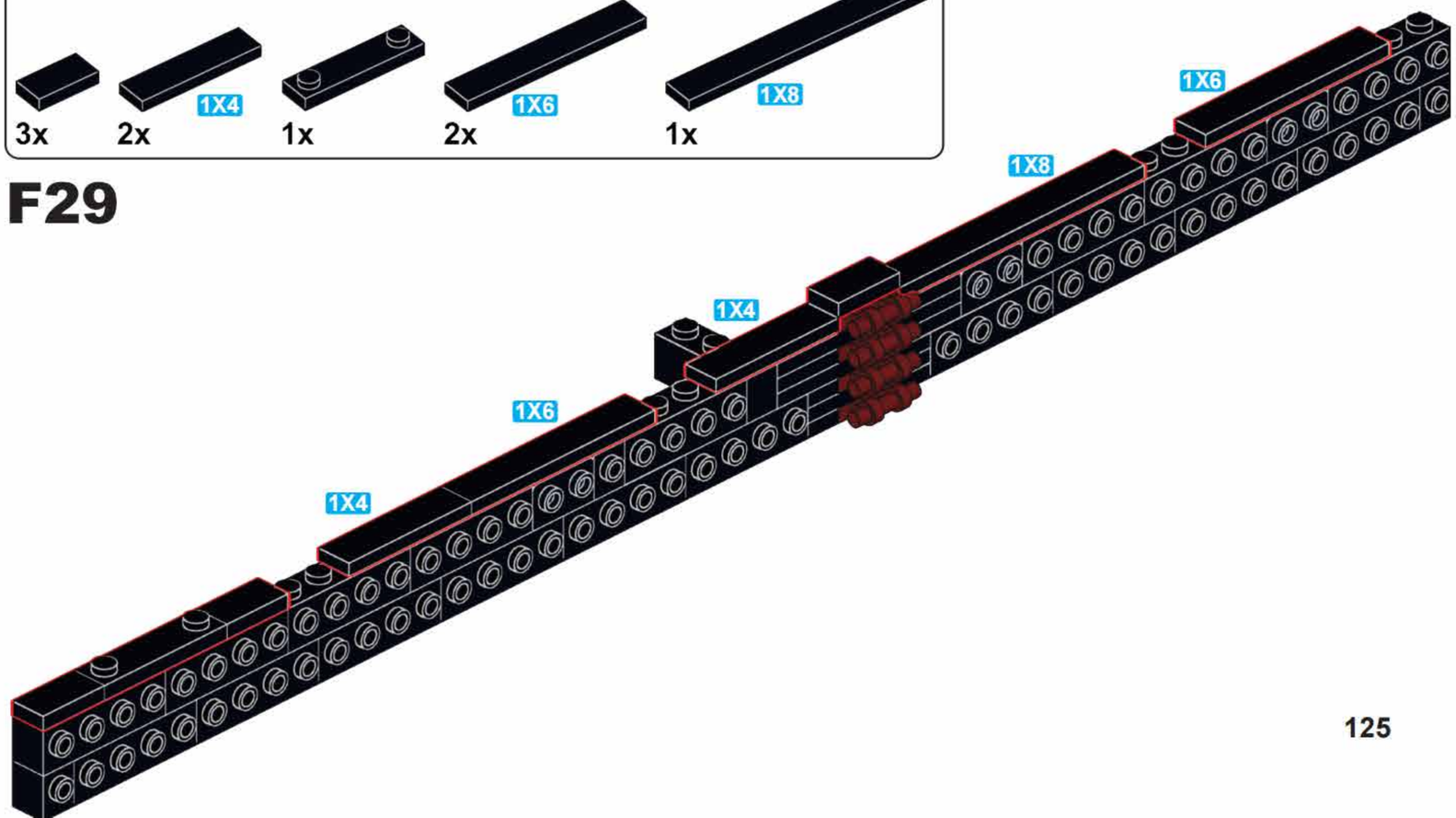

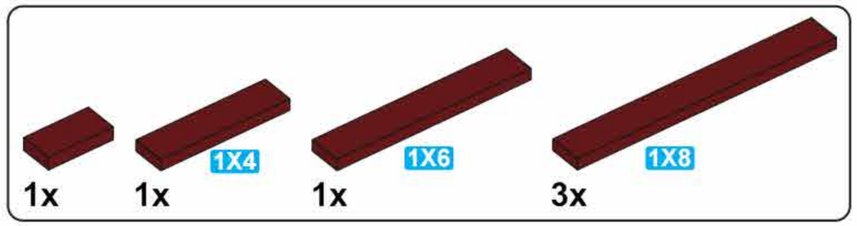
1x
1x
1X4
1x
1X6
3x
1X8

F30

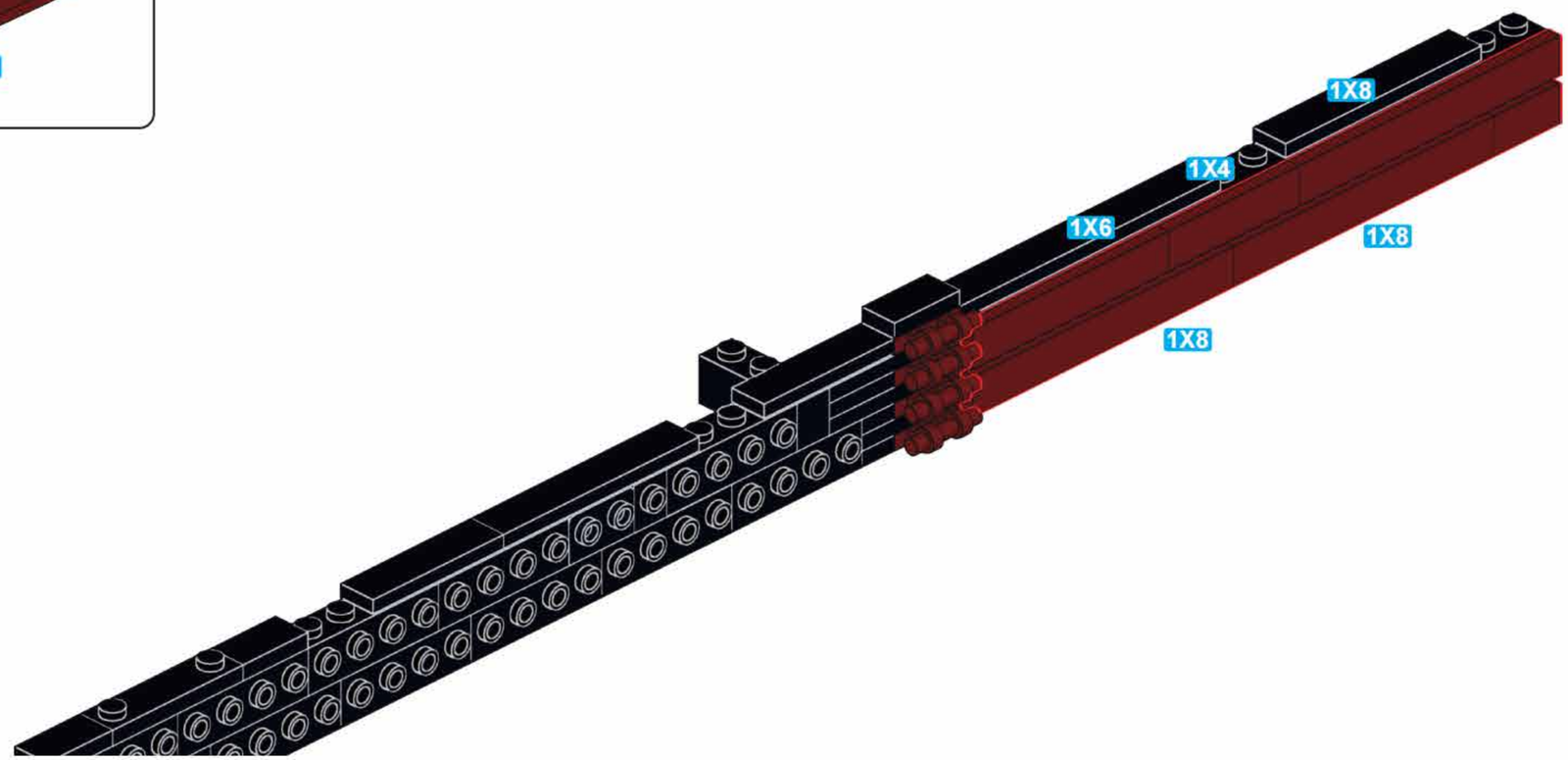
1X8
1X4
1X6
1X8
1X8

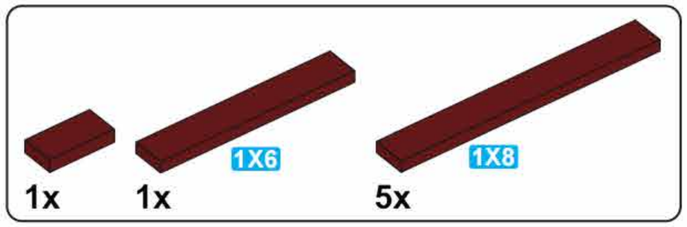
1x
1x
1X6
5x
1X8

F31

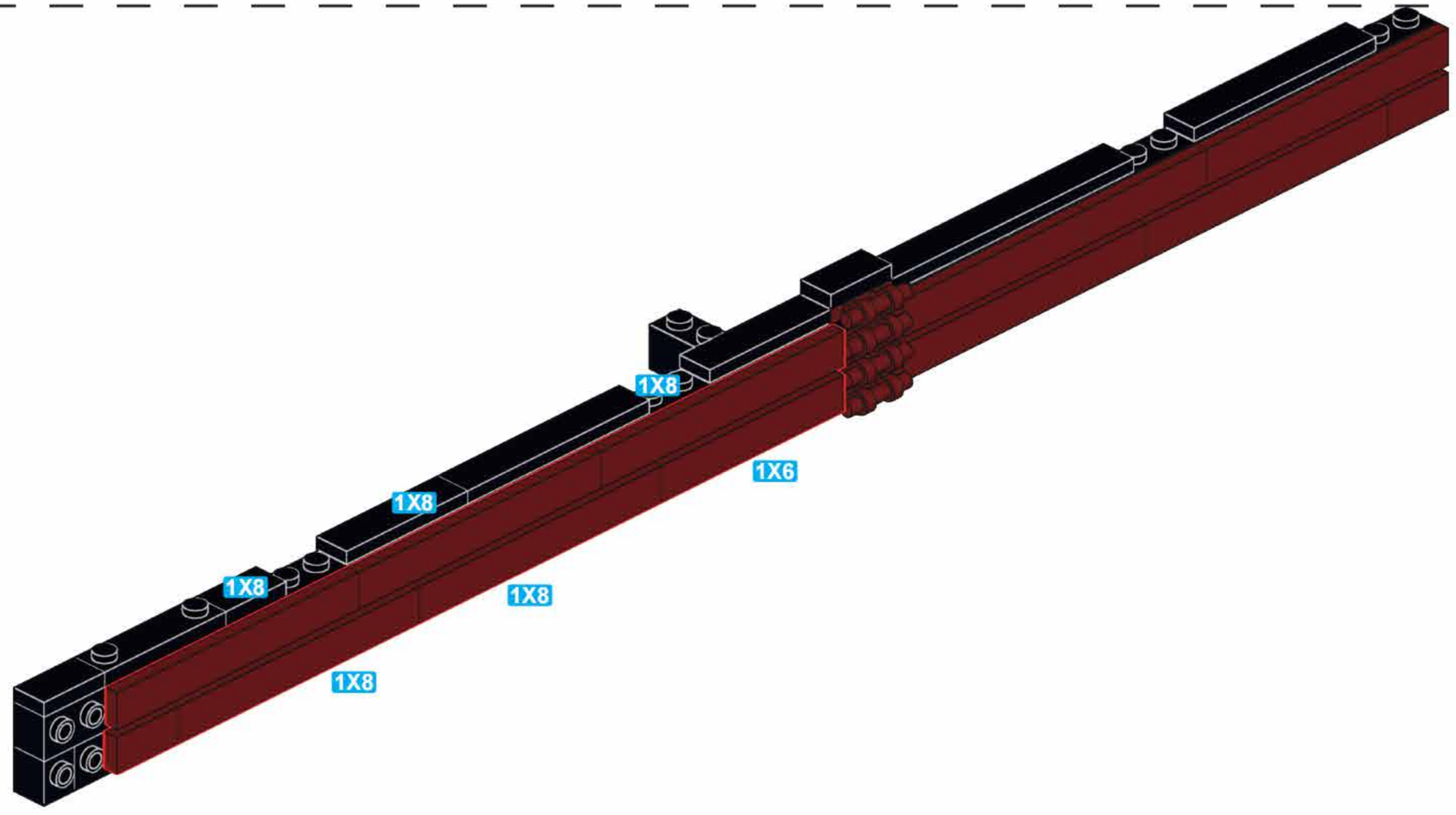
1X8
1X6
1X8
1X8
1X8

F32

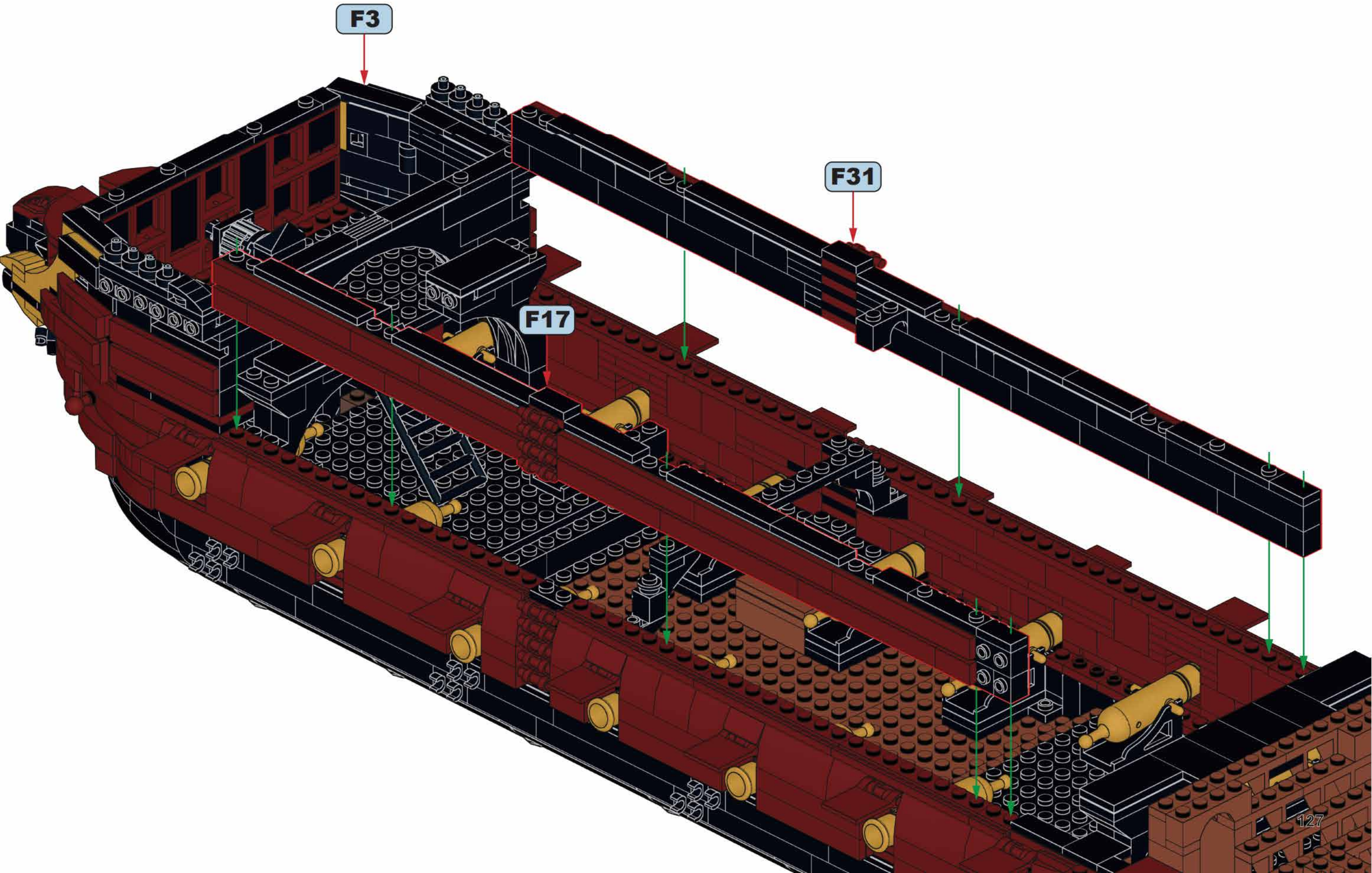

2x

F33

2x

1x

1X8

F34

1X8

4x

1X8

F35

1X8

1X8

1X8

1X8

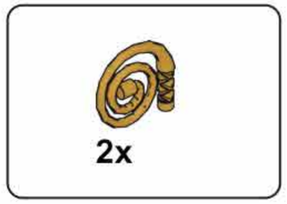

F36

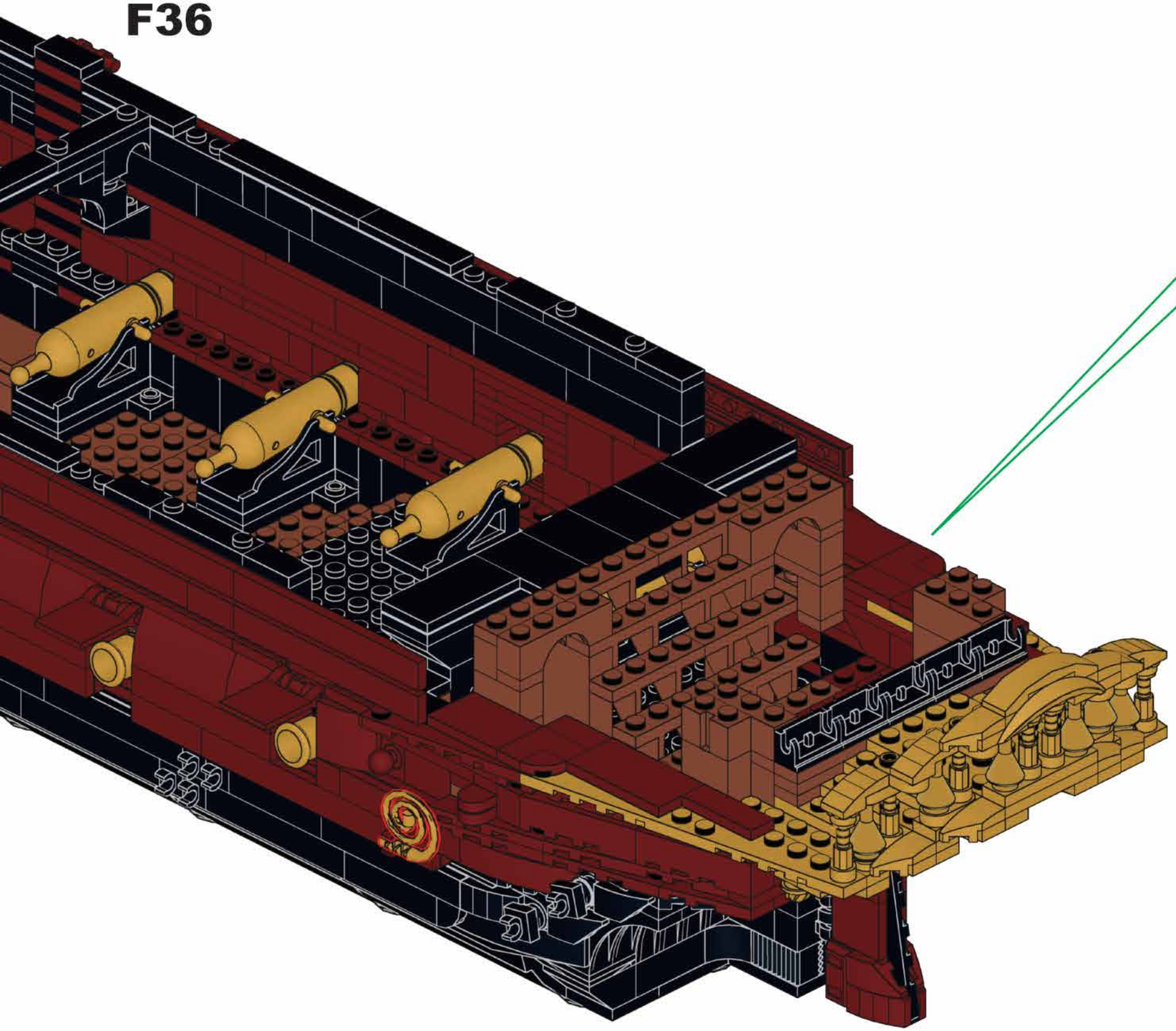

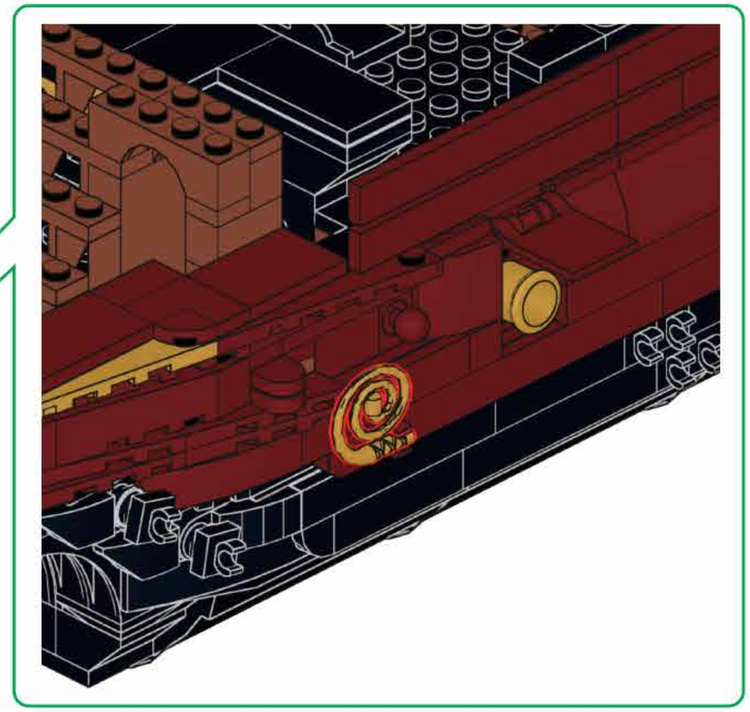

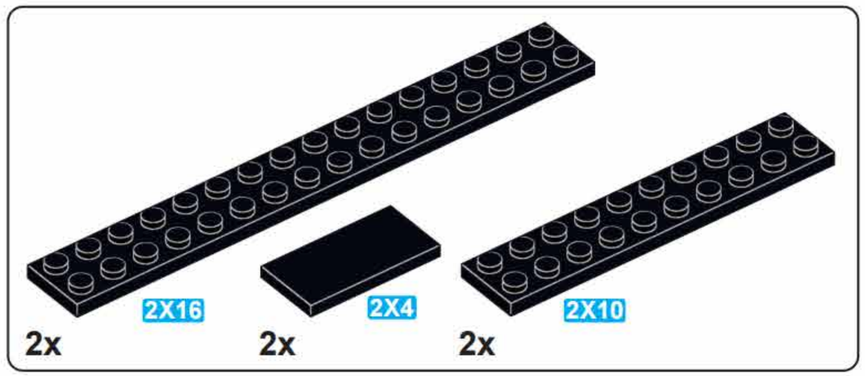

F37

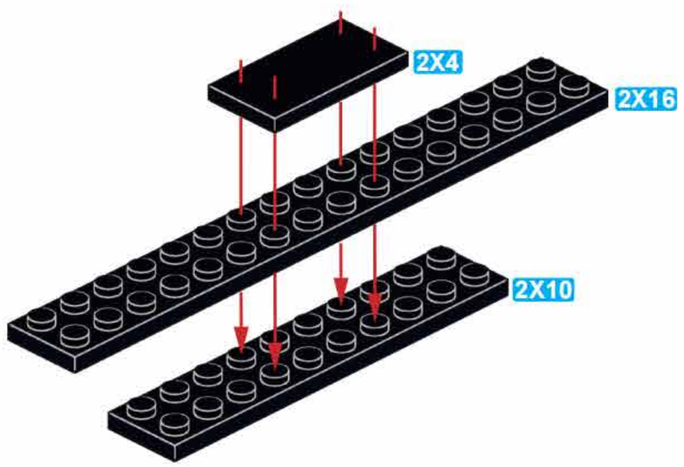

x2

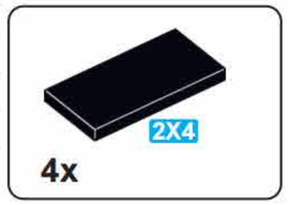

F38

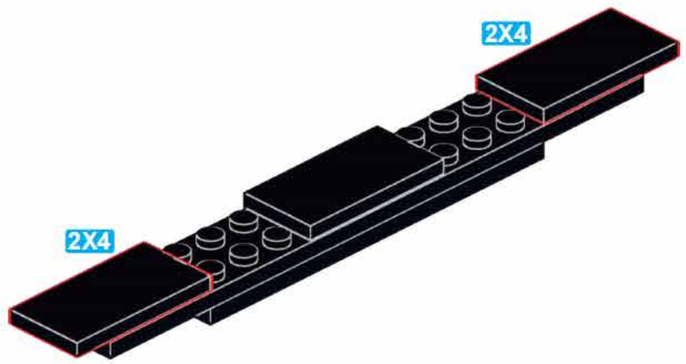

x2

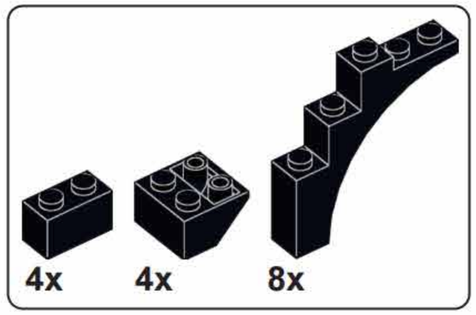

F39

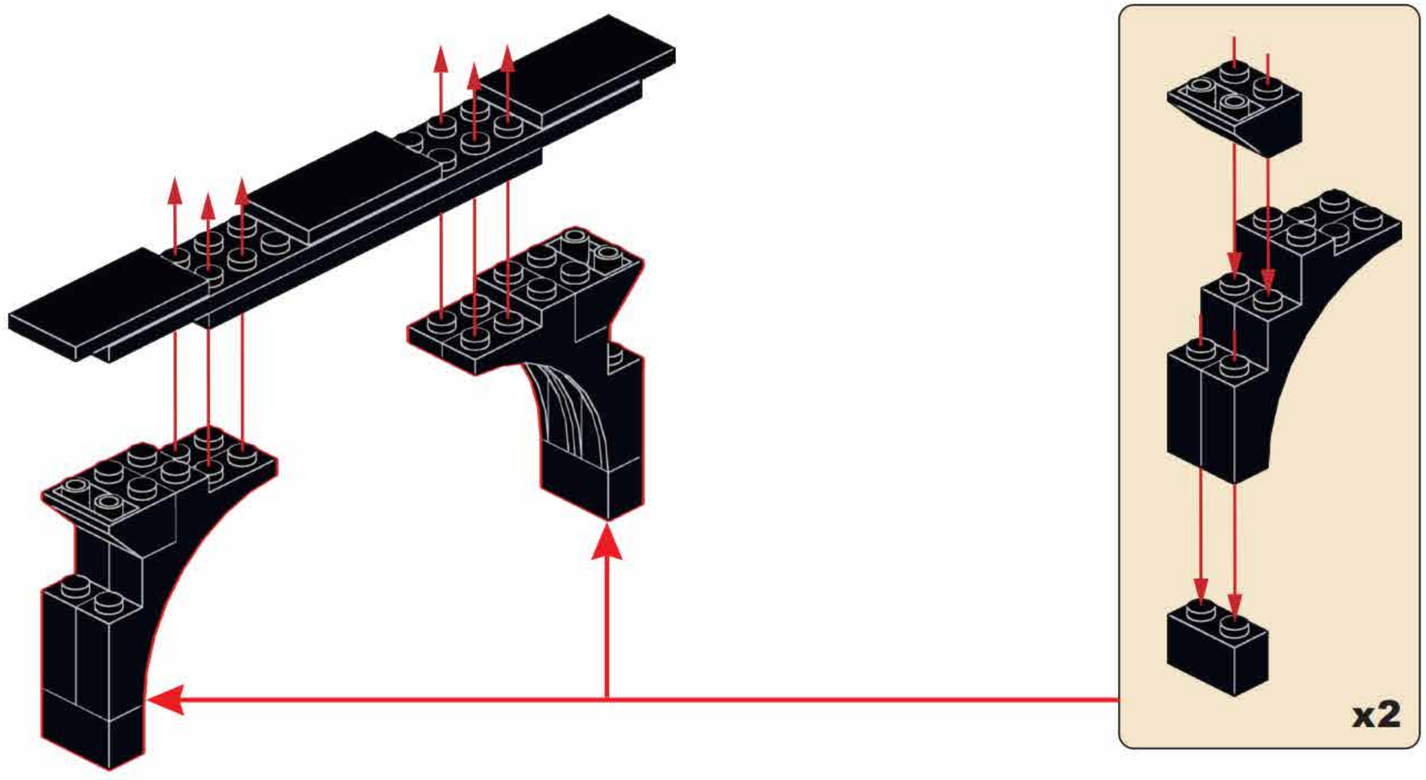

x2

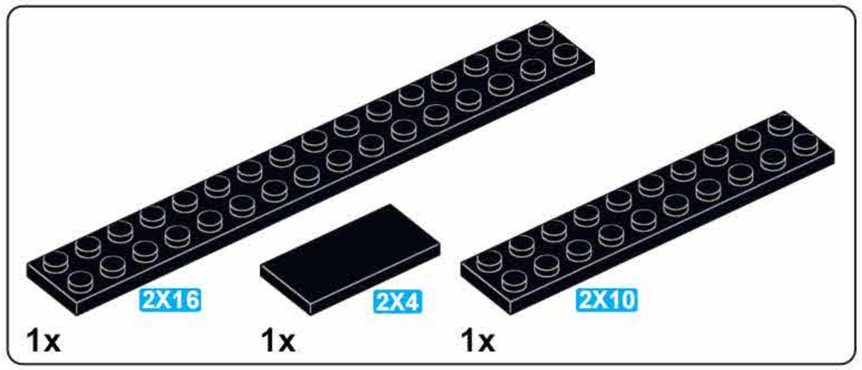

F40

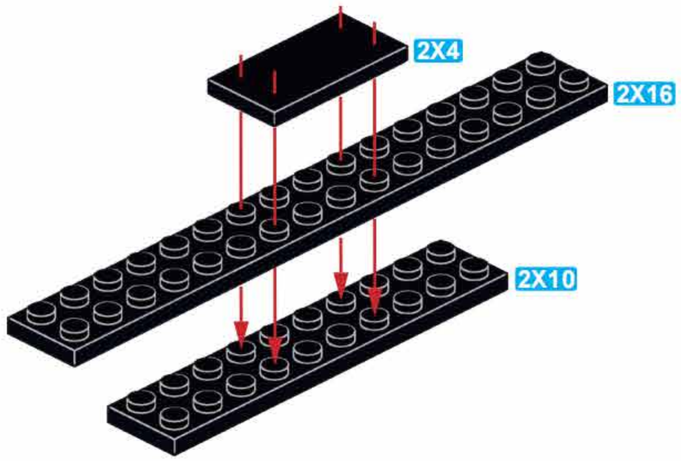

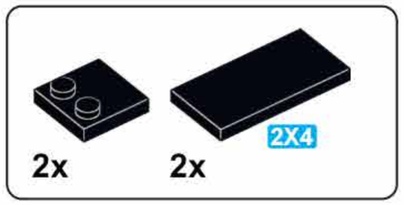

F41

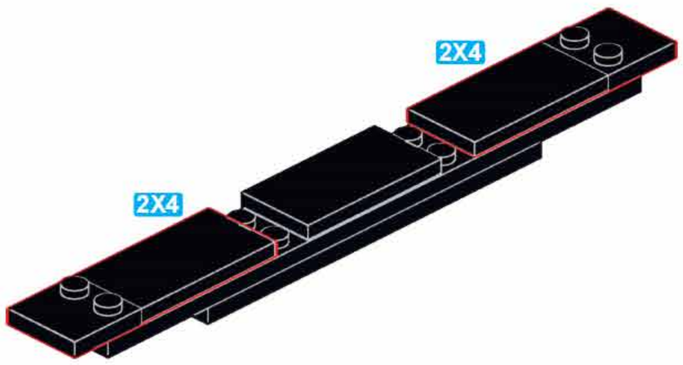

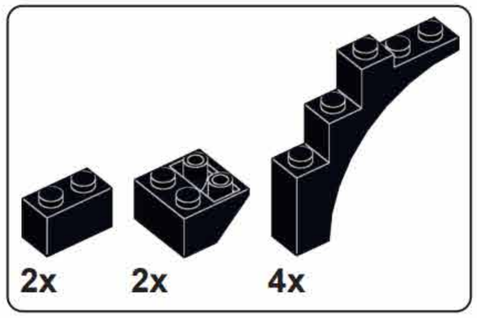

F42

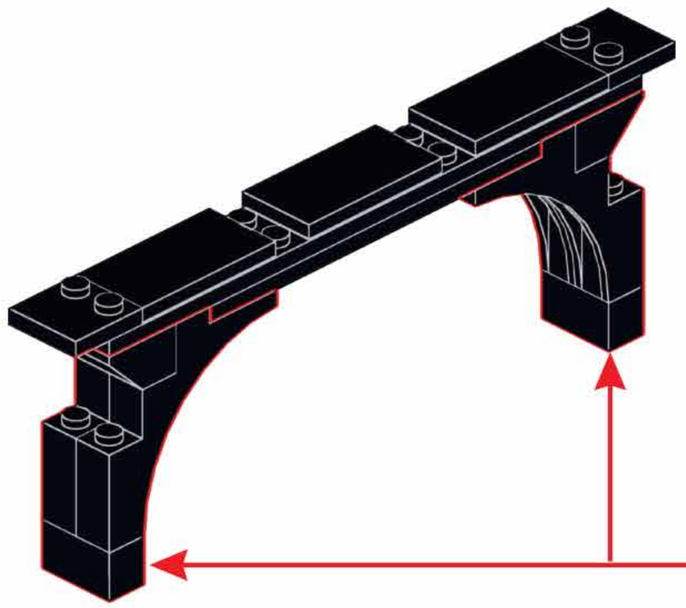

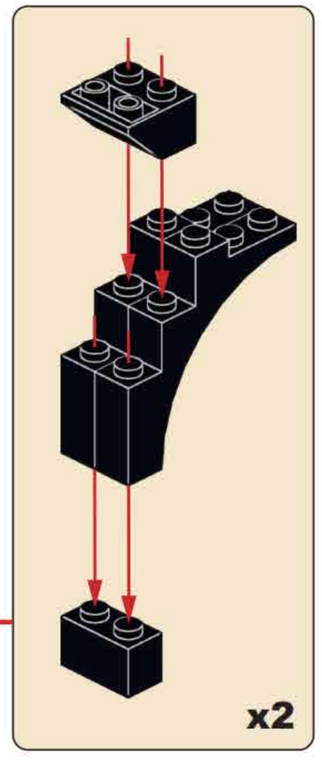

F43

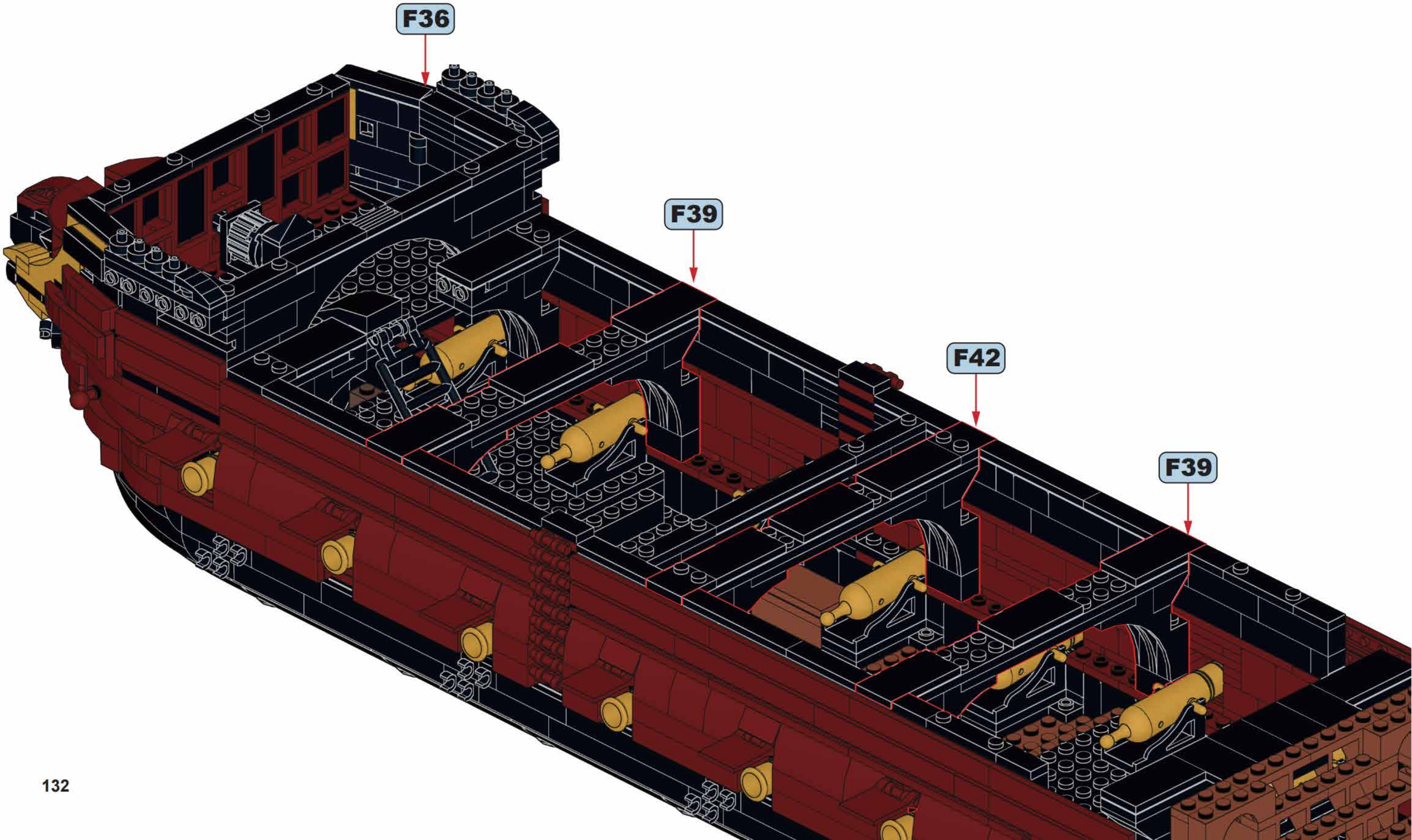

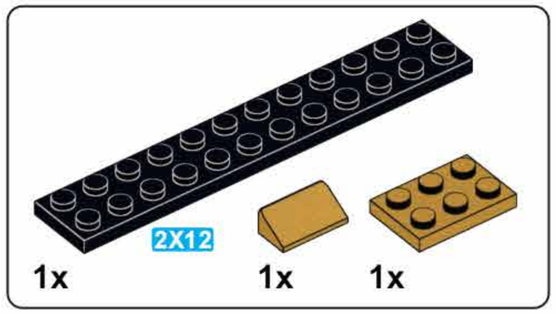

F44

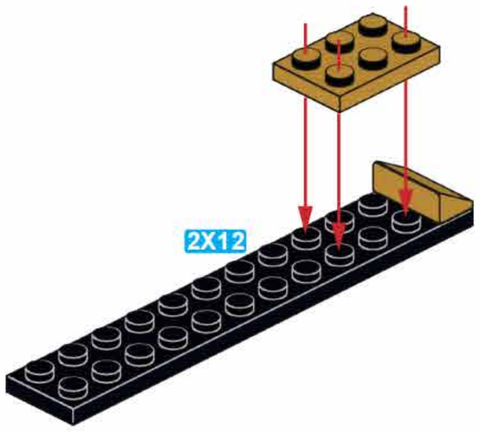

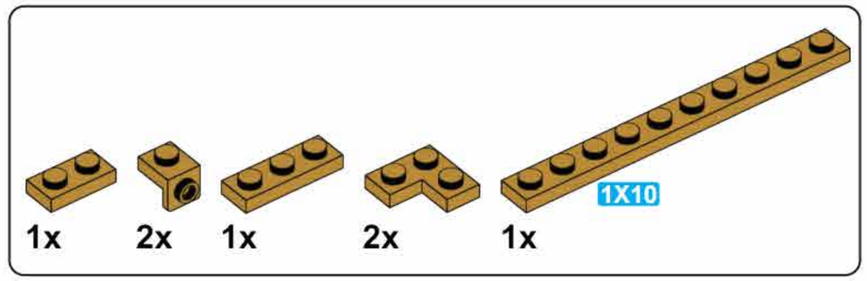

F45

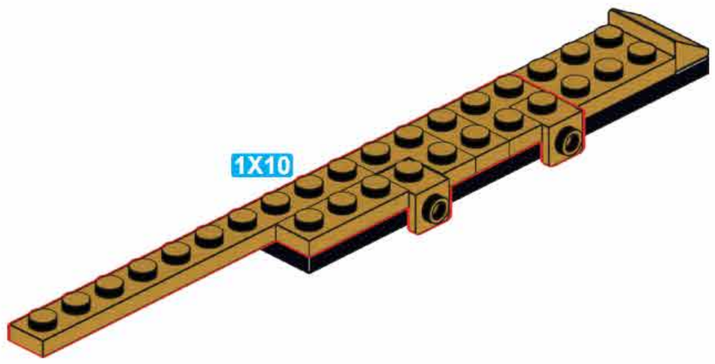

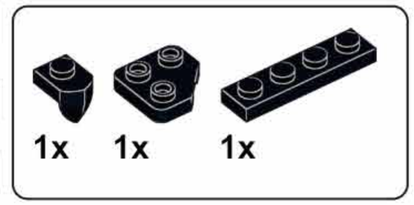

F46

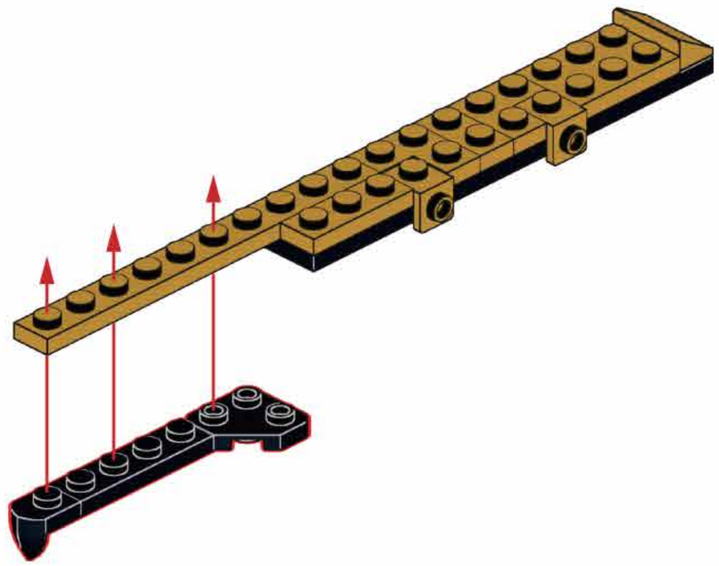

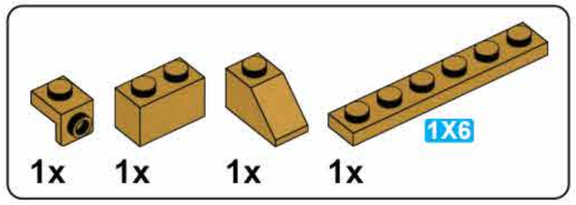

F47

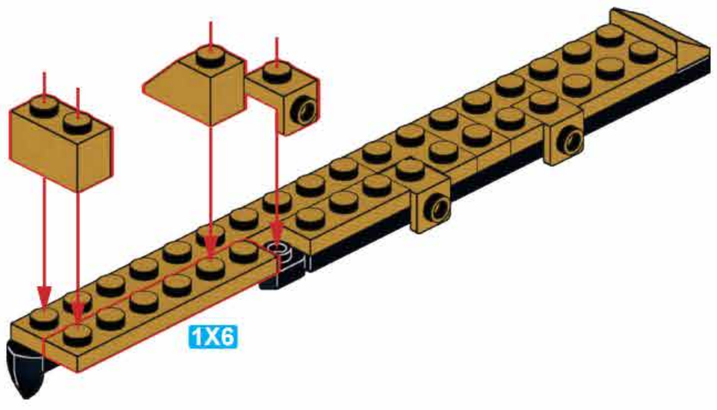

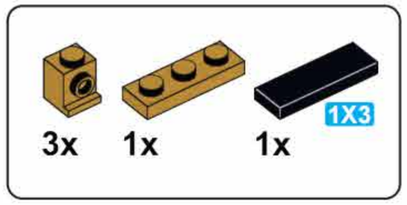

F48

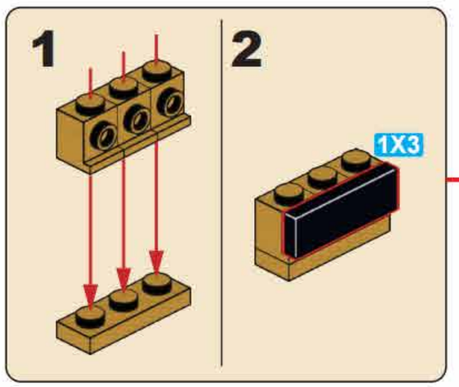

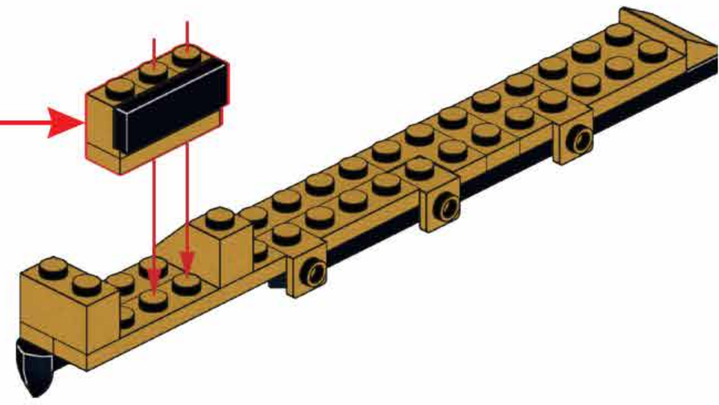

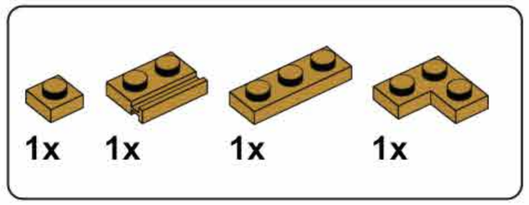

F49

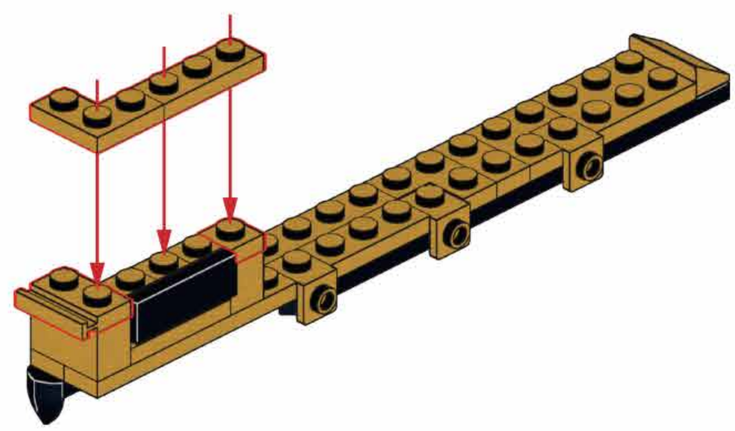

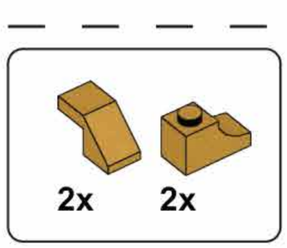

F51

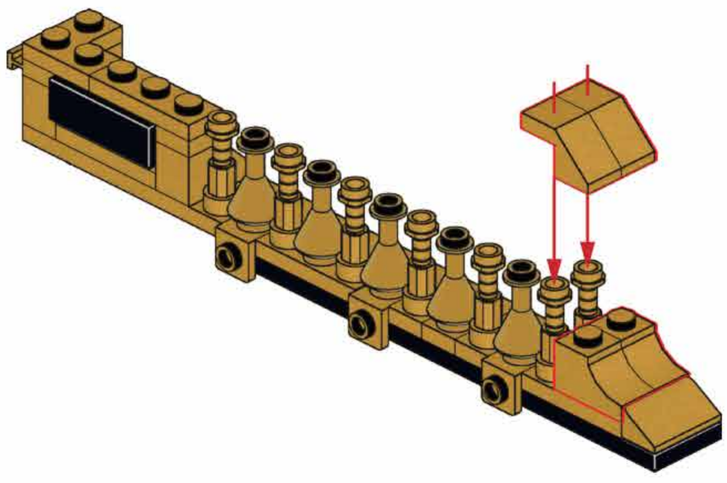

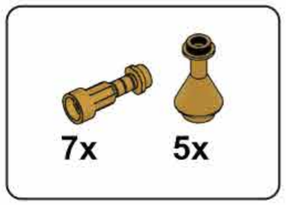

F50

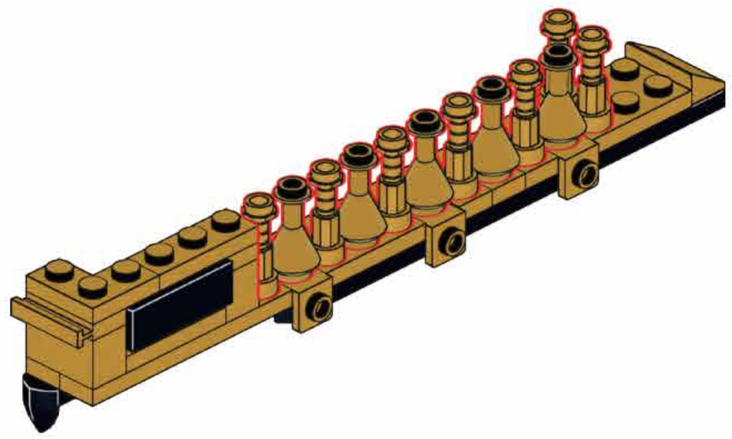

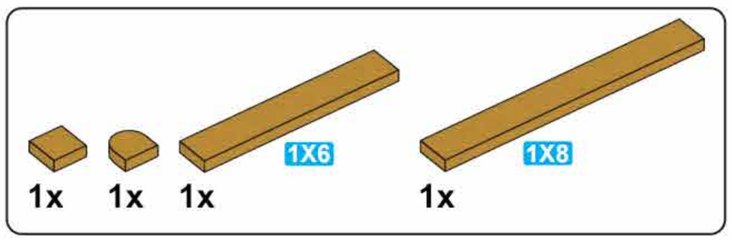

F52

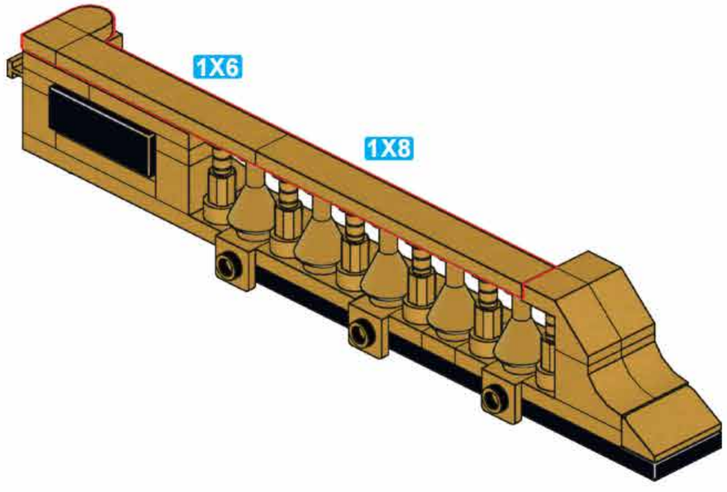

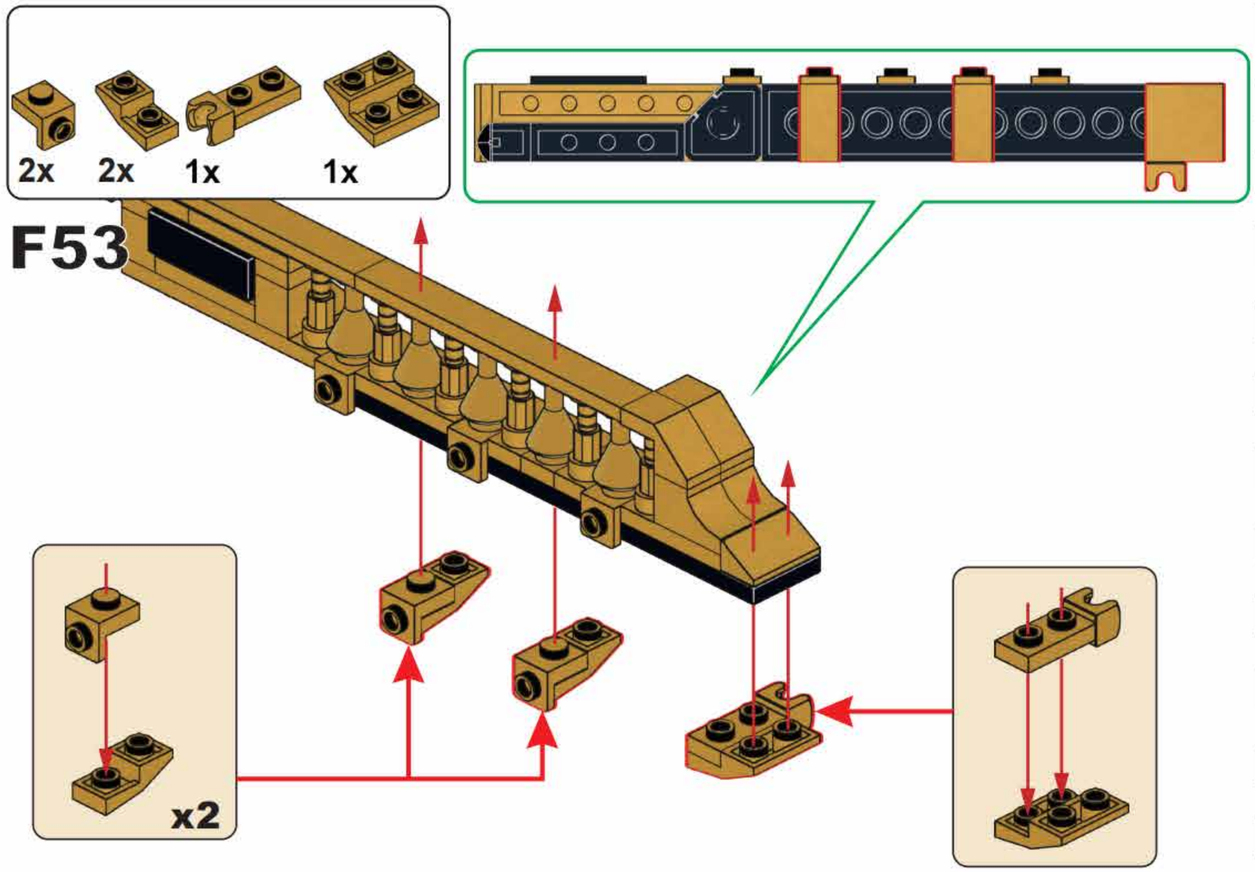

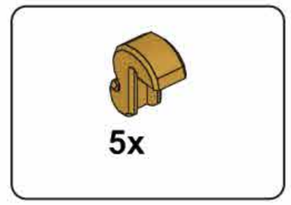

F54

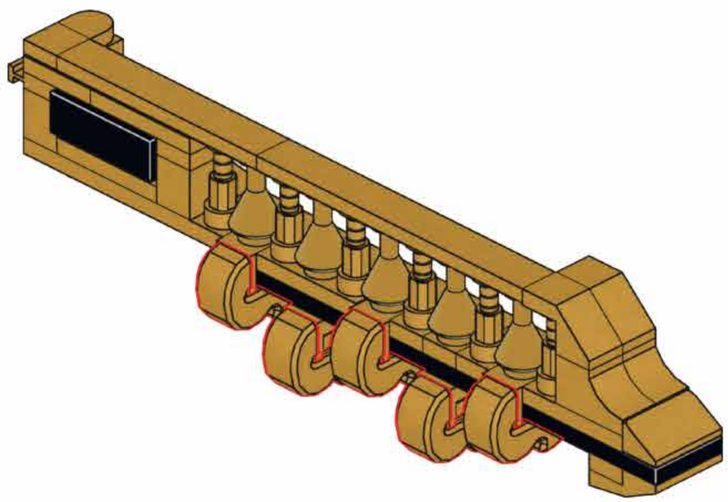

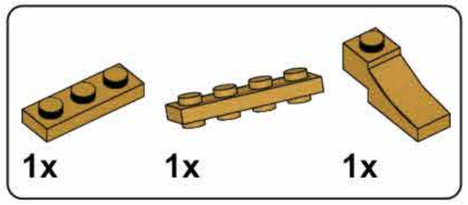

F55

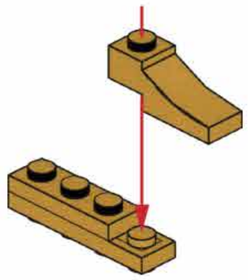

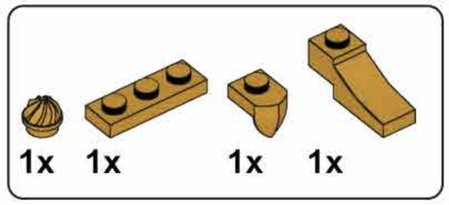

F56

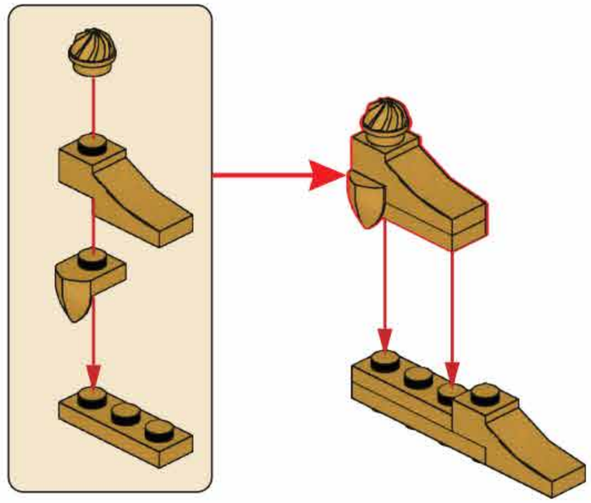

F57

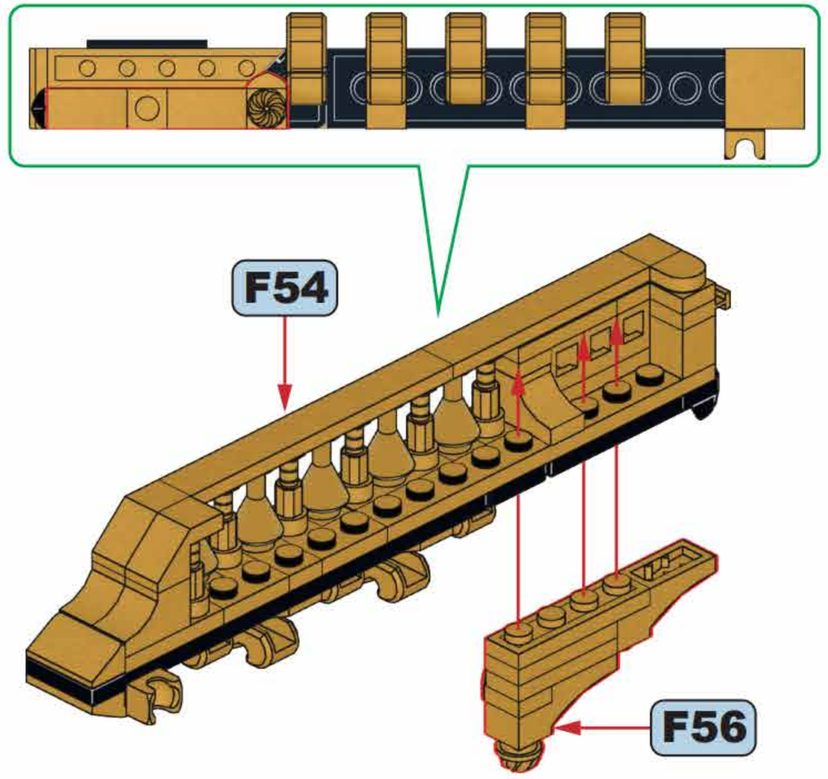

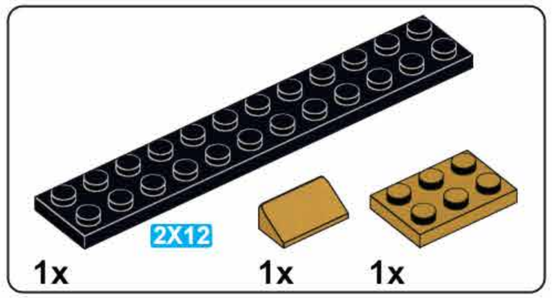

F58

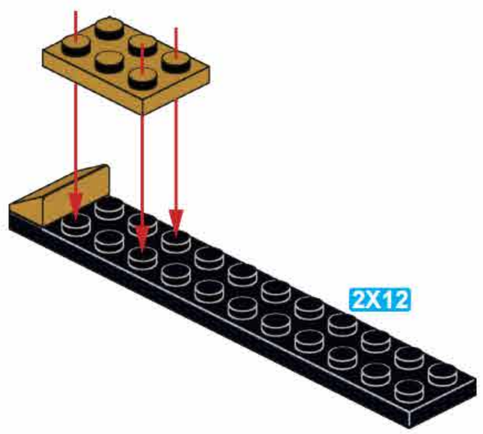

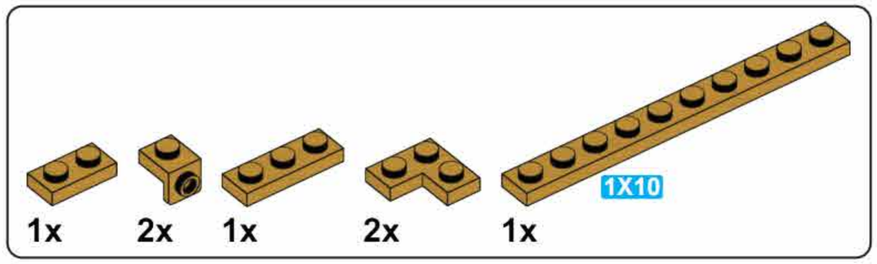

F59

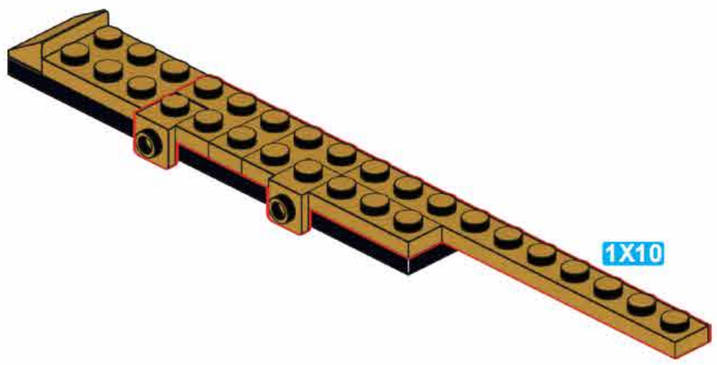

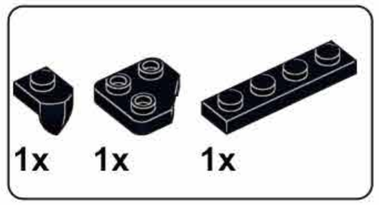

F60

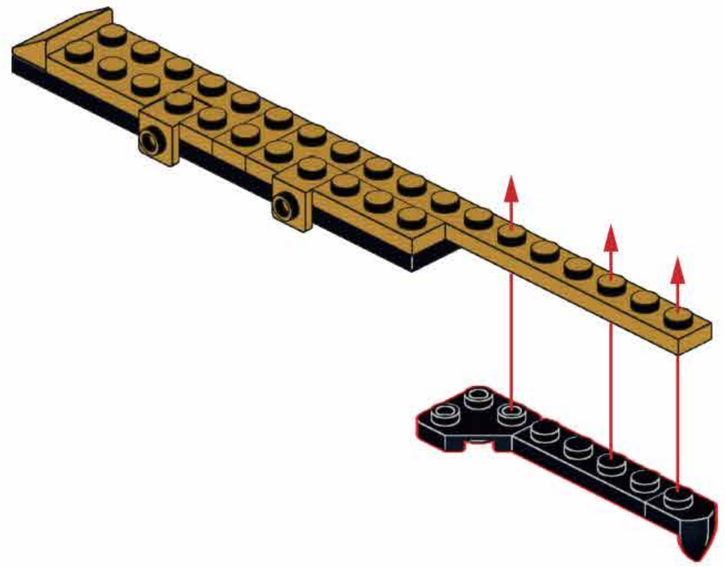

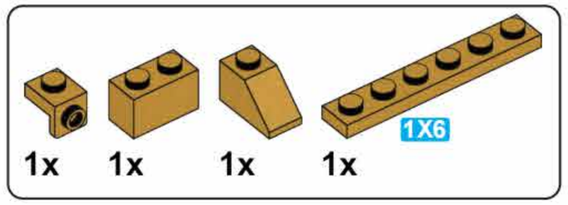

F61

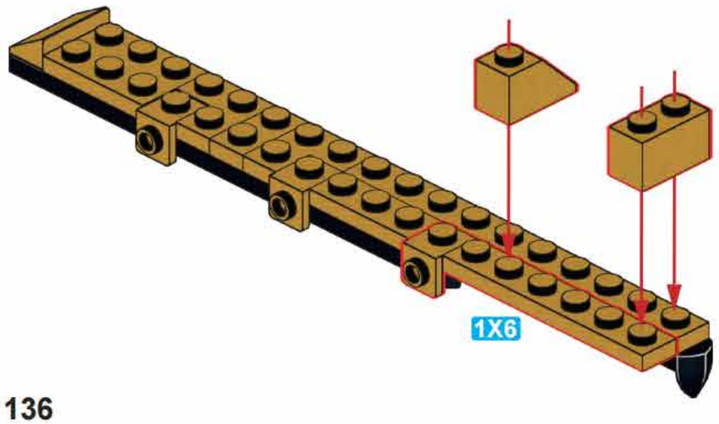

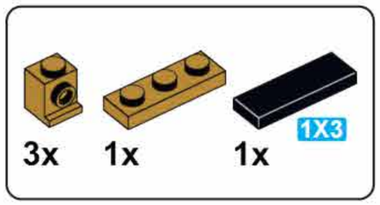

F62

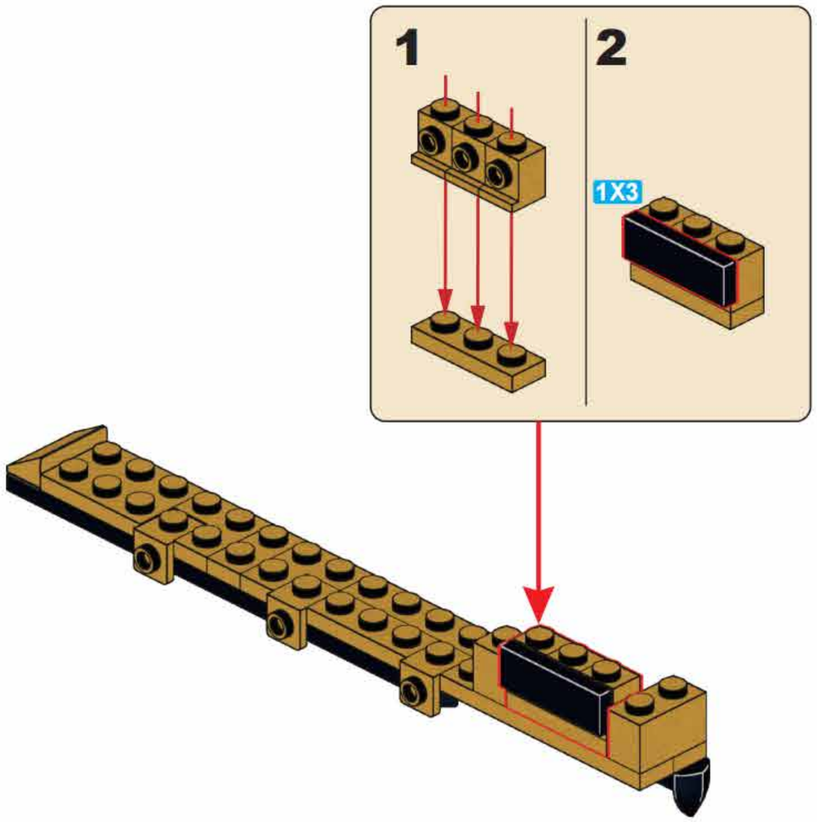

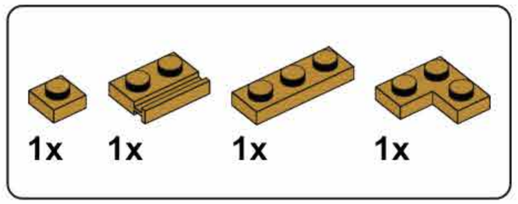

F63

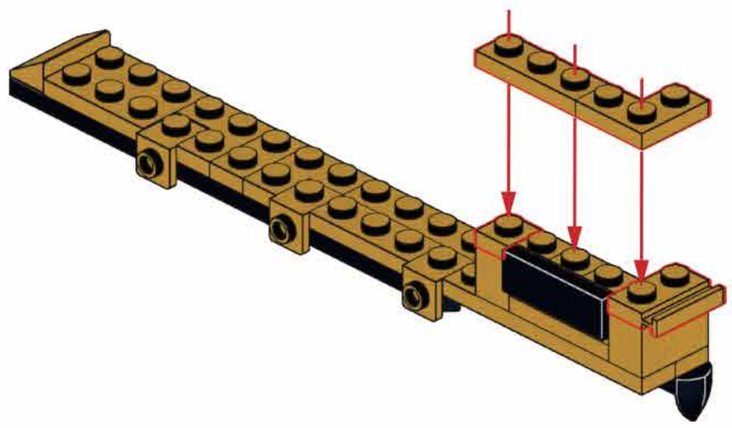

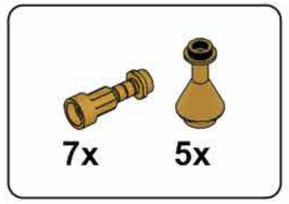

F64

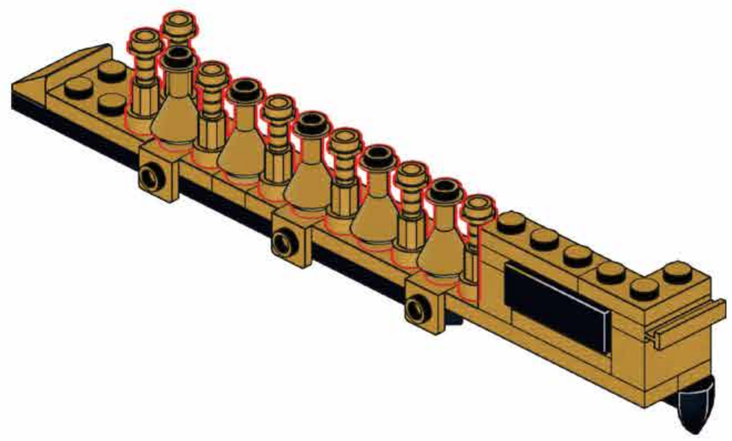

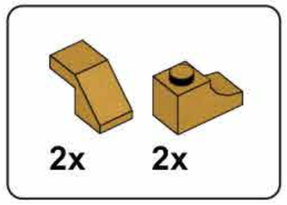

F65

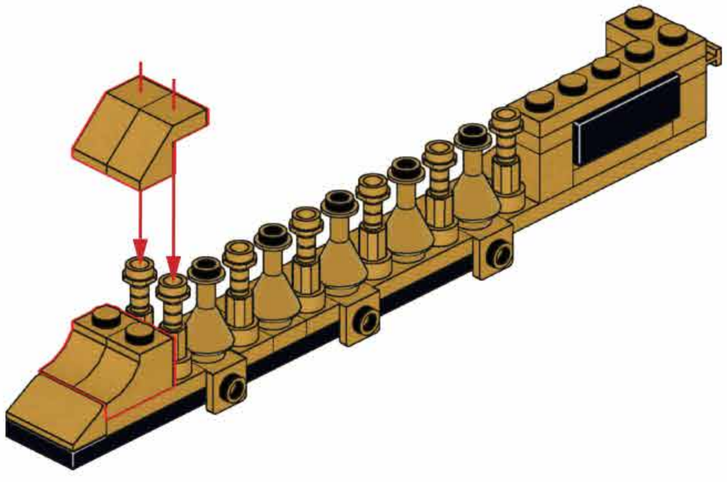

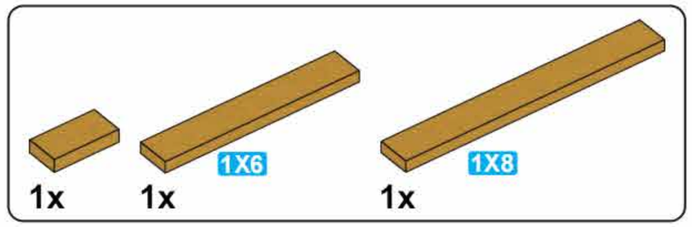

F66

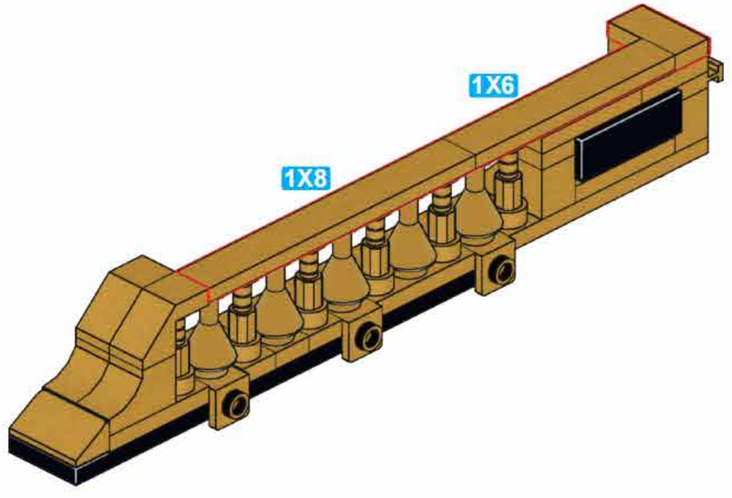

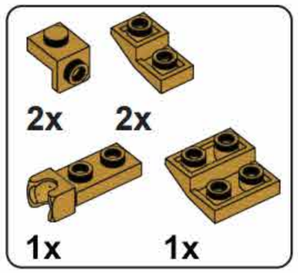

F67

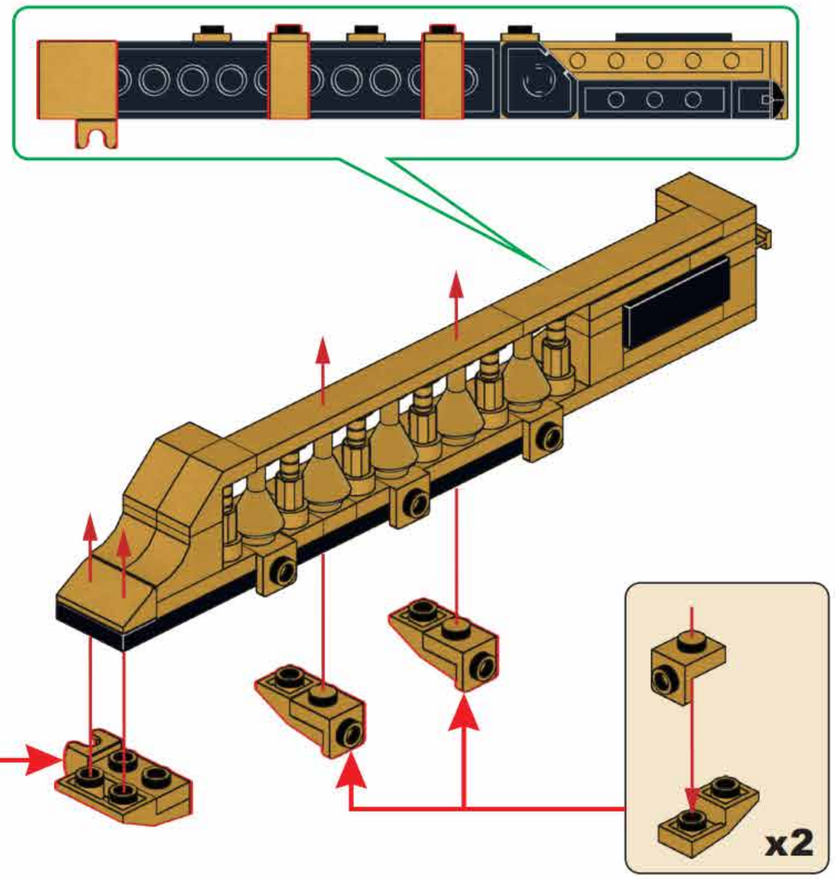

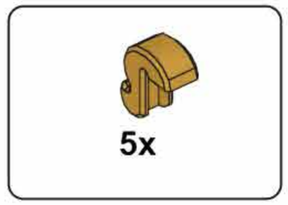

F68

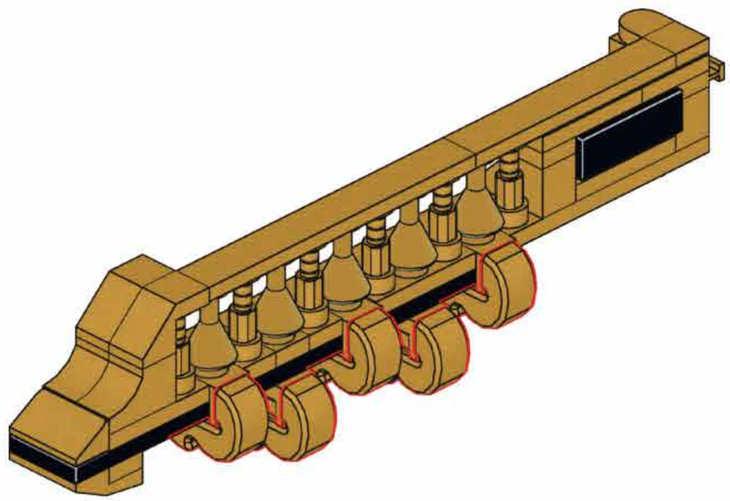

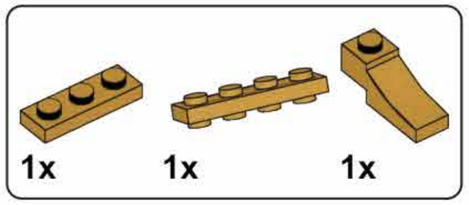

F69

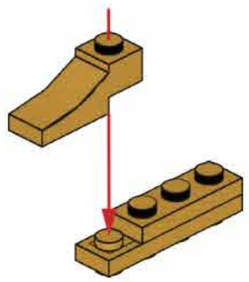

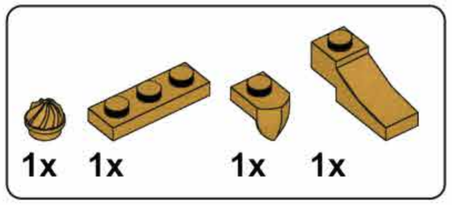

F70

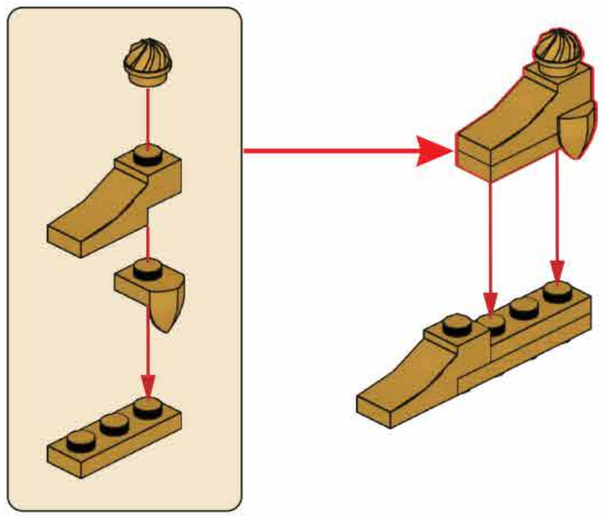

F71

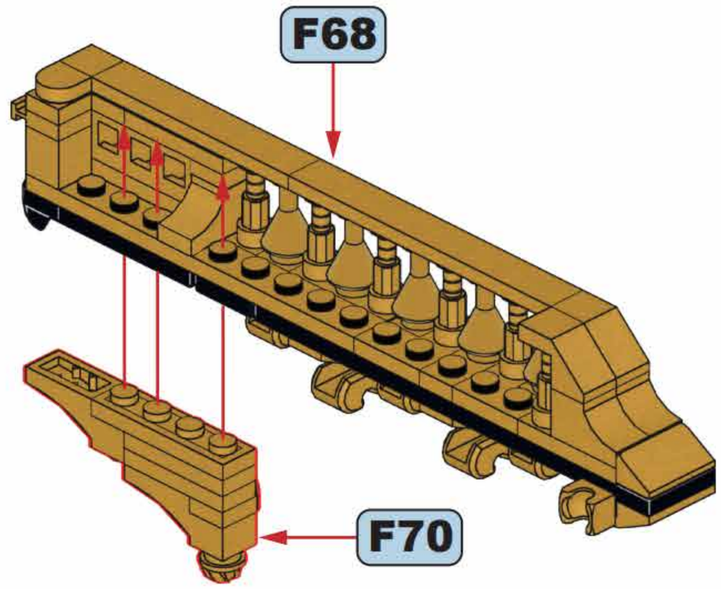

F72

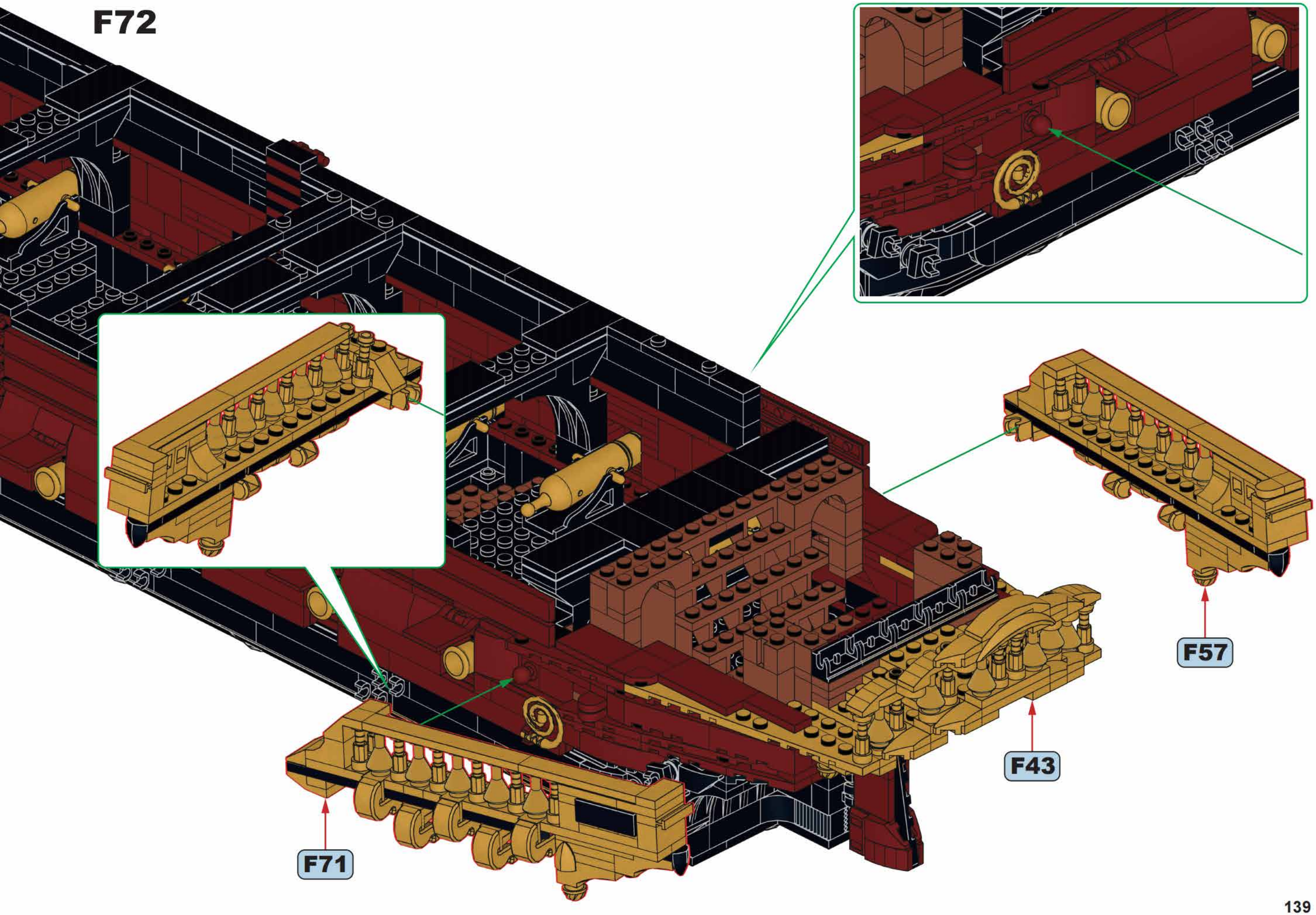

7

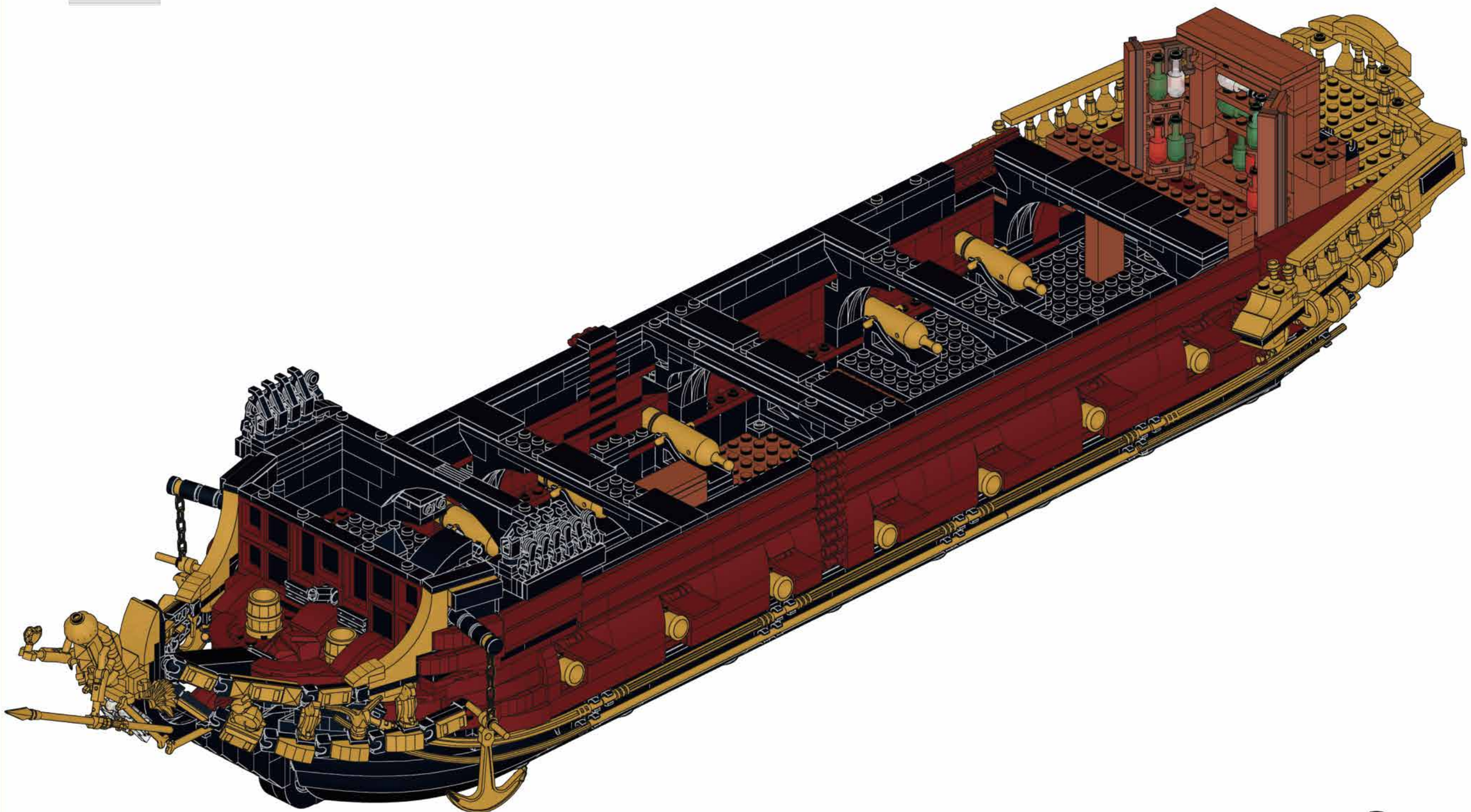

G

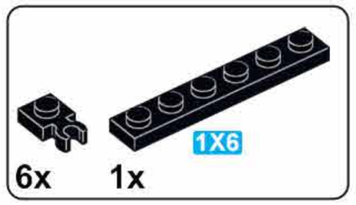

G1

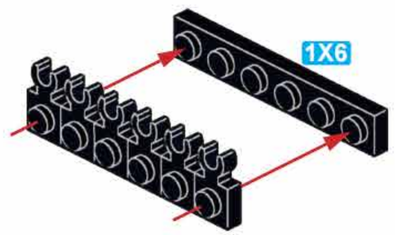

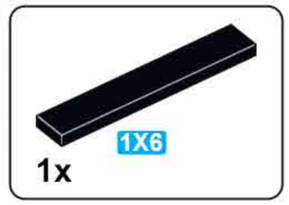

G2

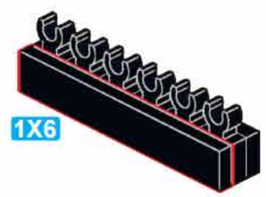

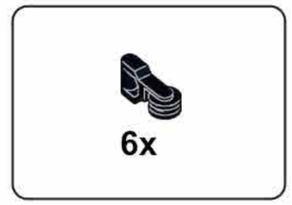

G3

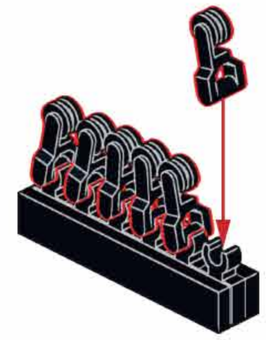

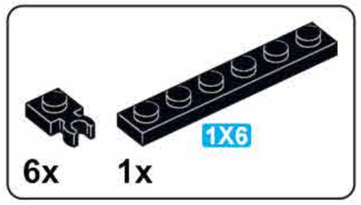

G4

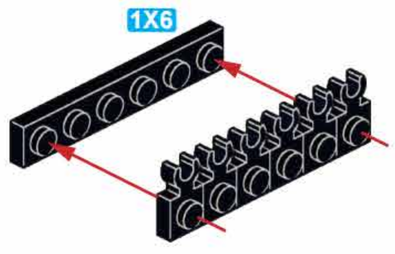

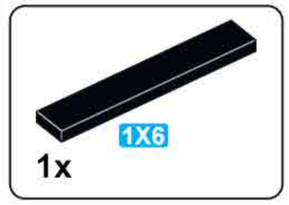

G5

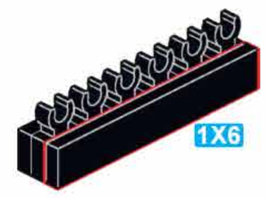

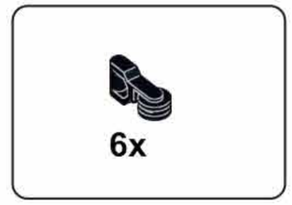

G6

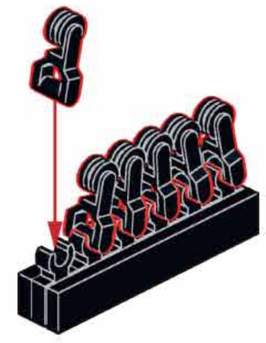

G7

F72

G3

G6

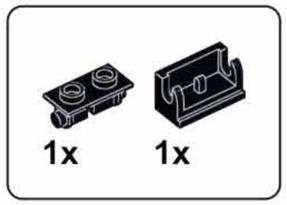

G8

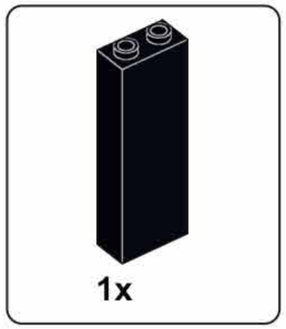

G9

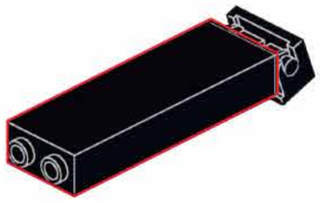

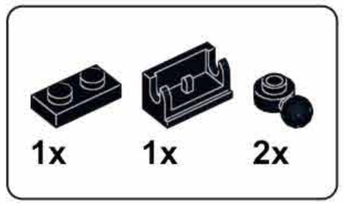

G10

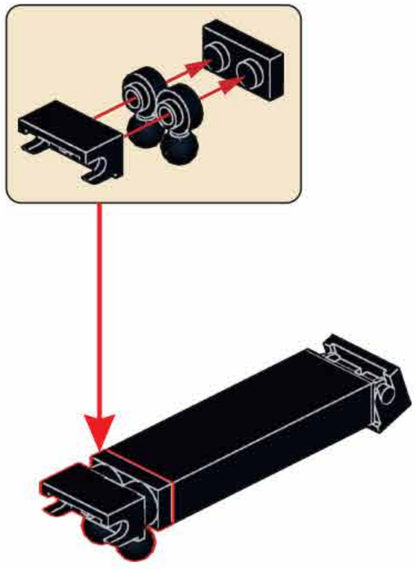

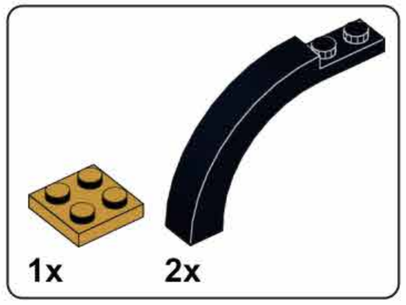

G11

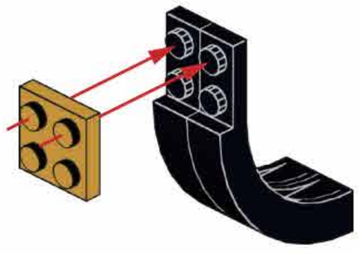

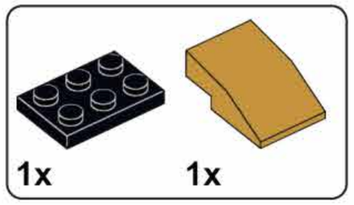

G12

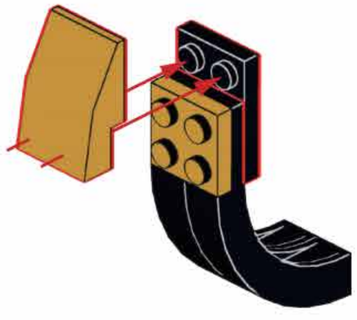

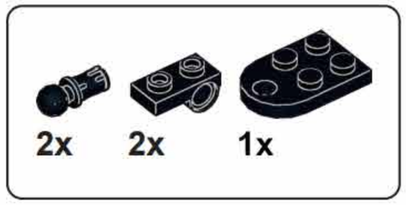

G13

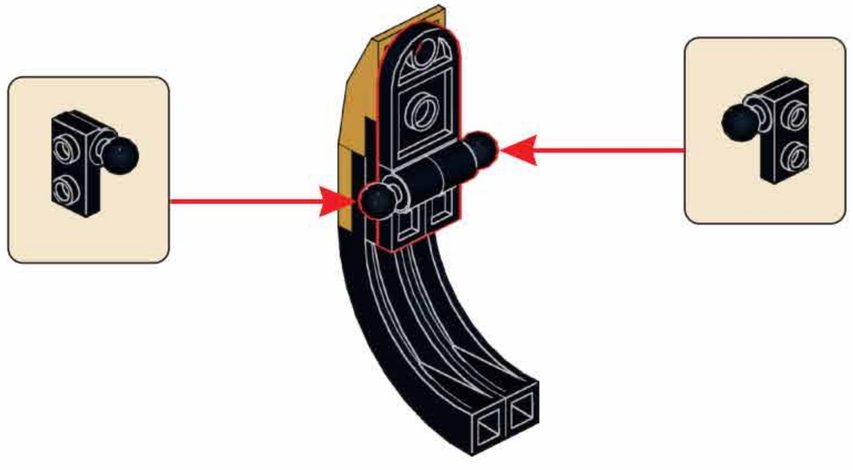

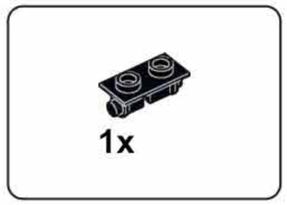

G14

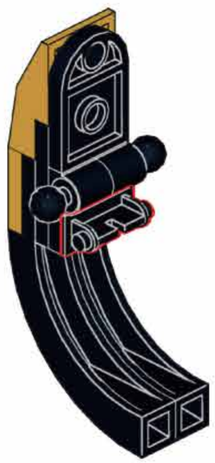

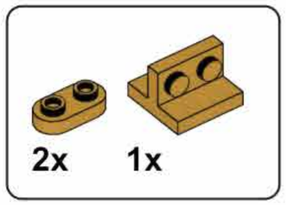

G15

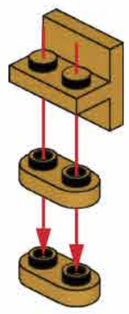

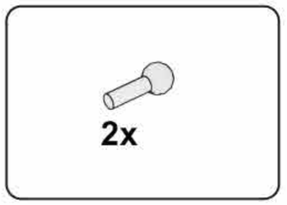

G16

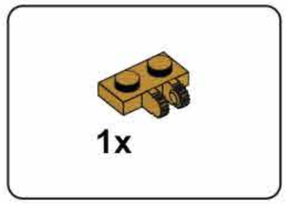

G17

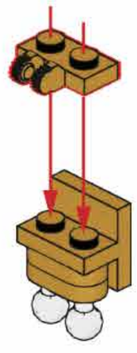

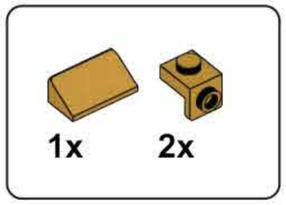

G18

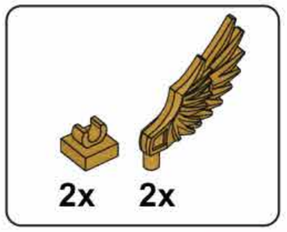

G19

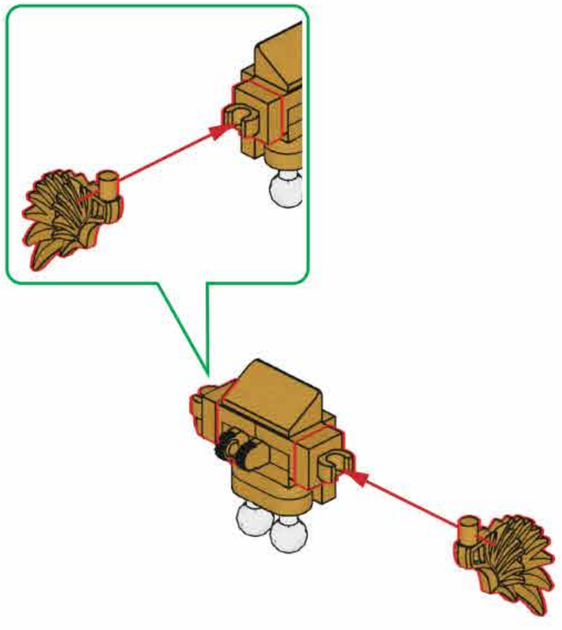

G20

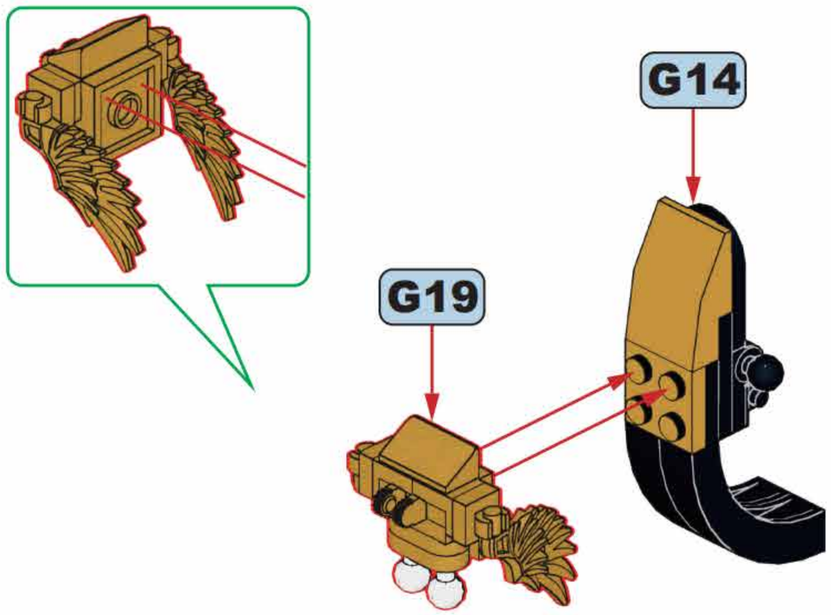

G21

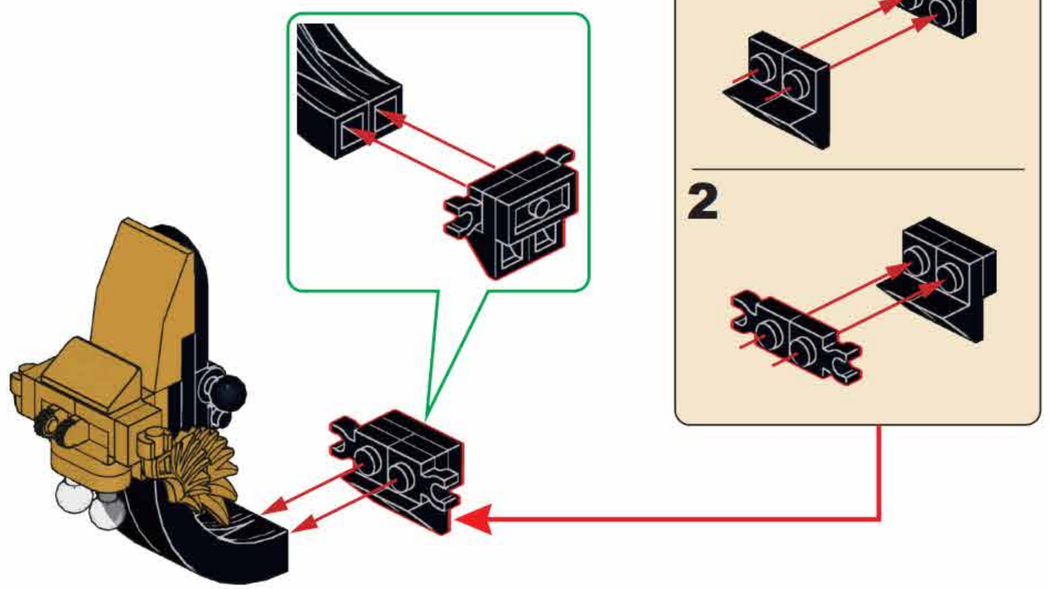

G22

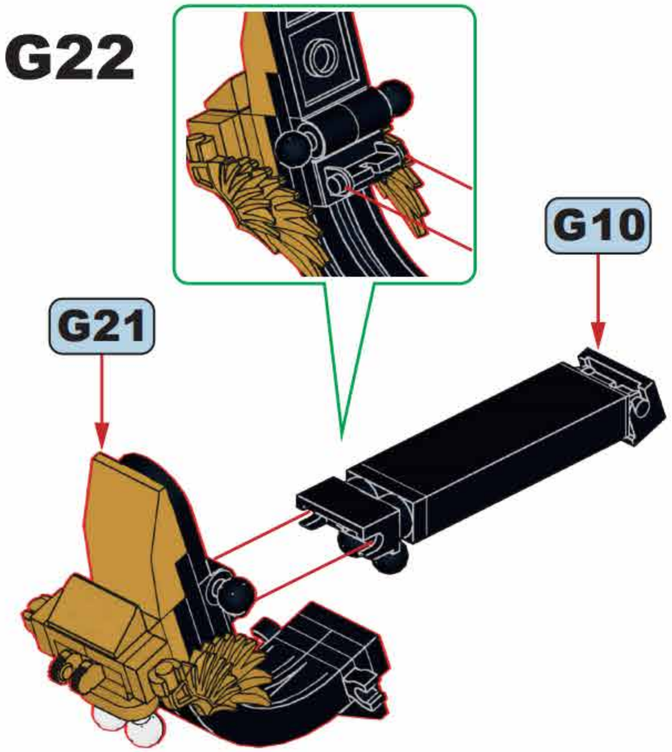

G23

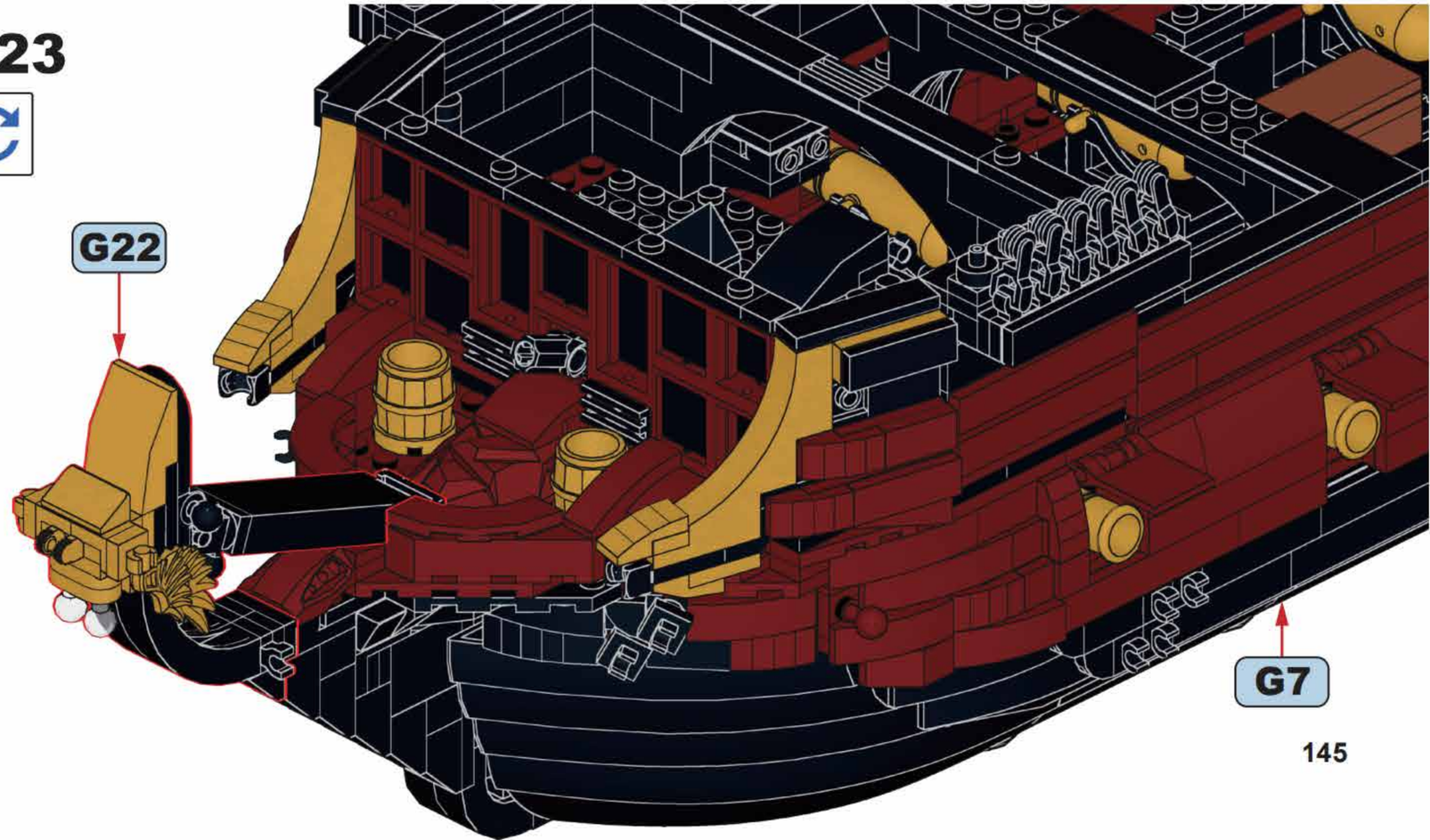

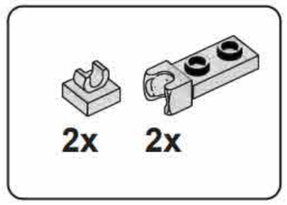

G24

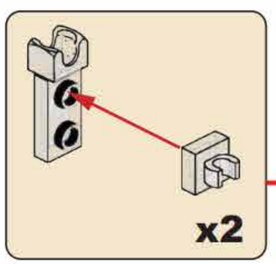

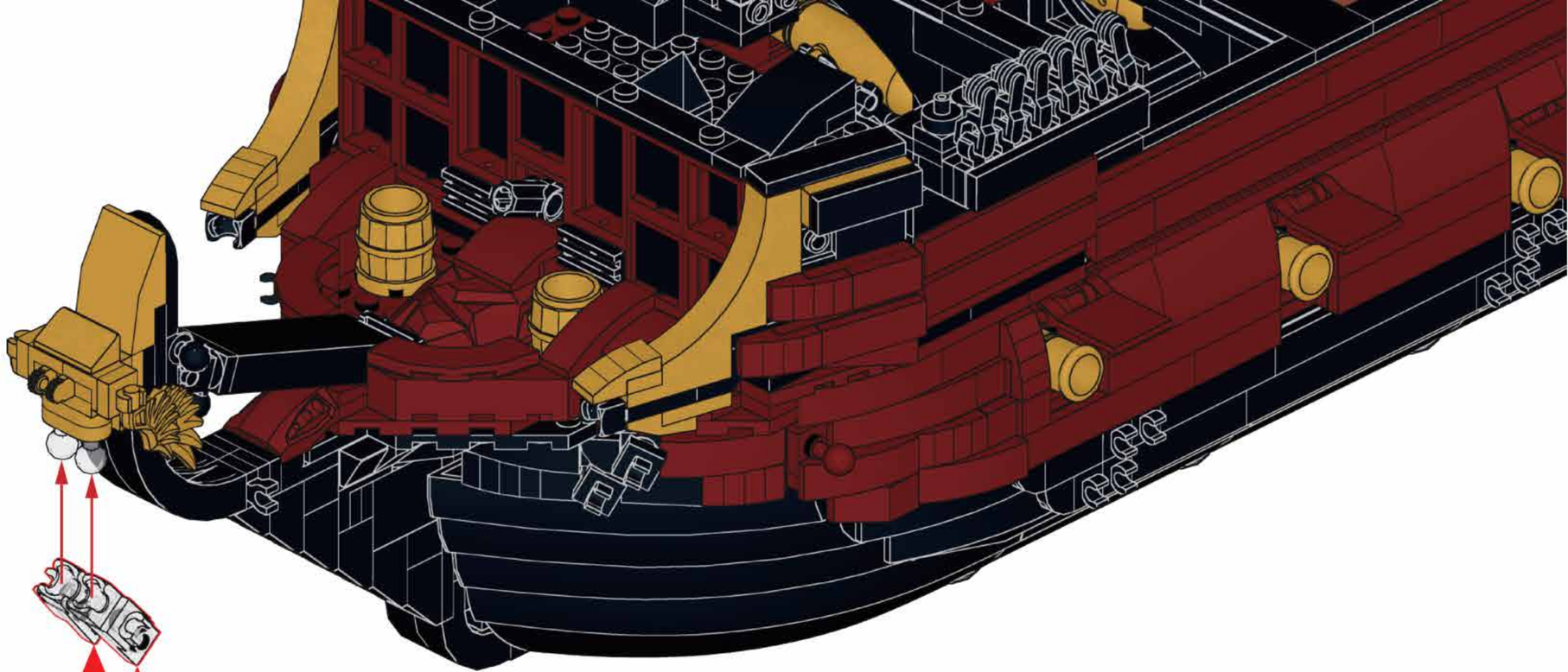

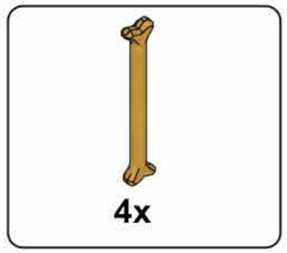

G25

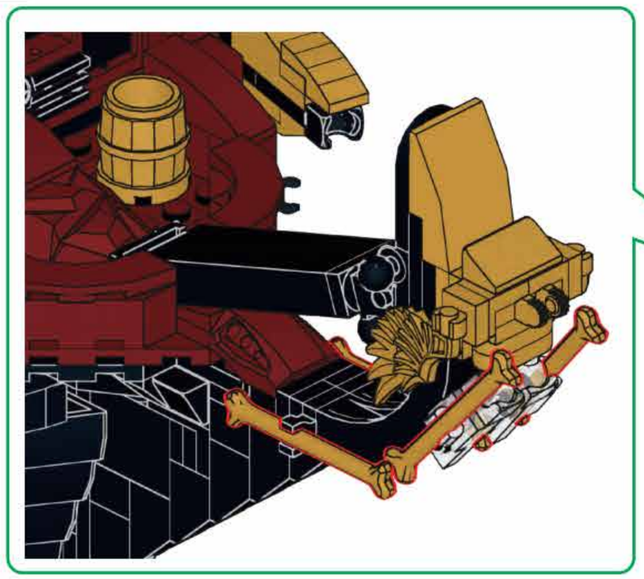

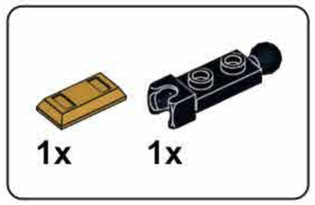

G26

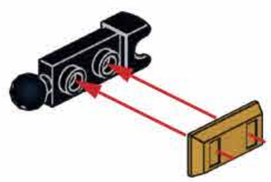

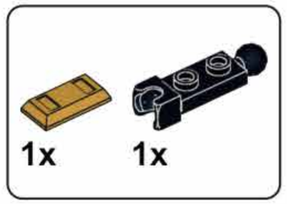

G28

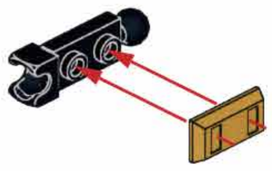

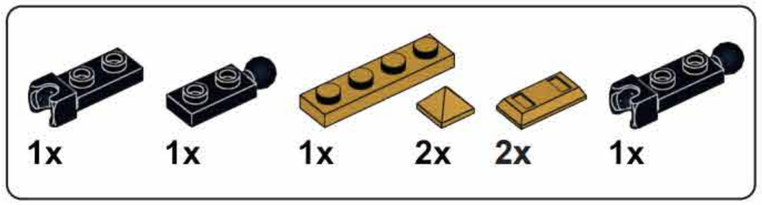

G27

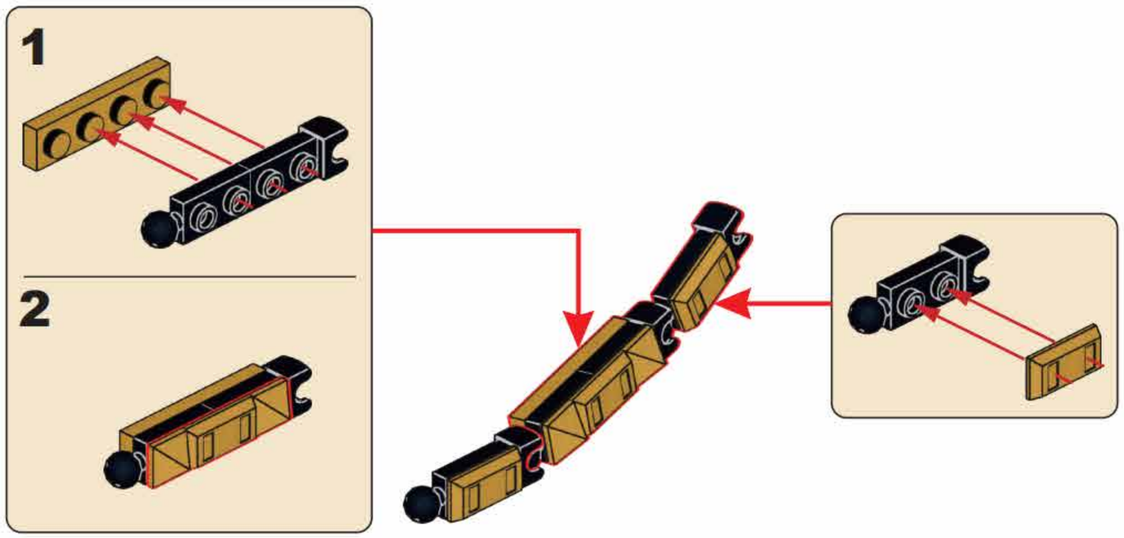

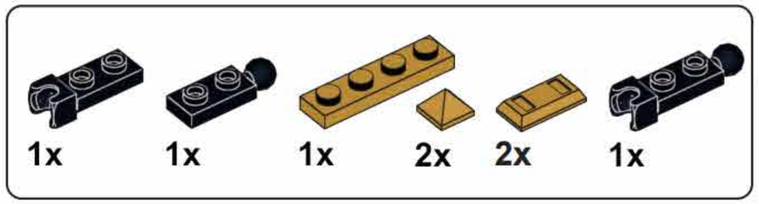

G29

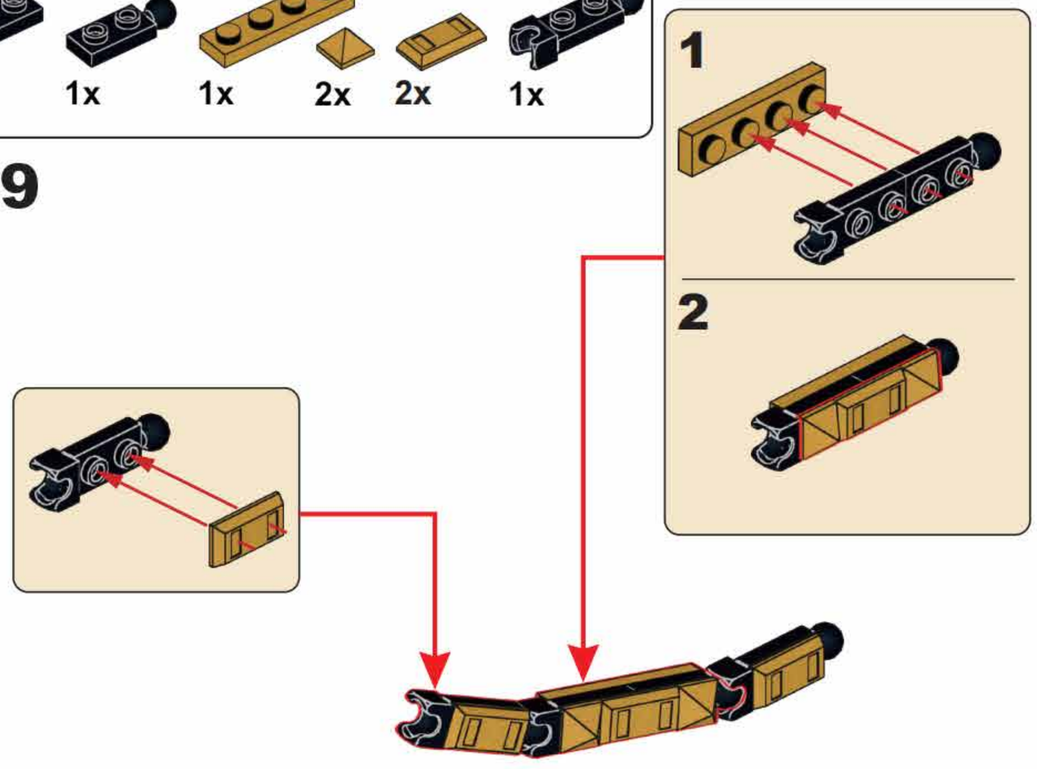

G30

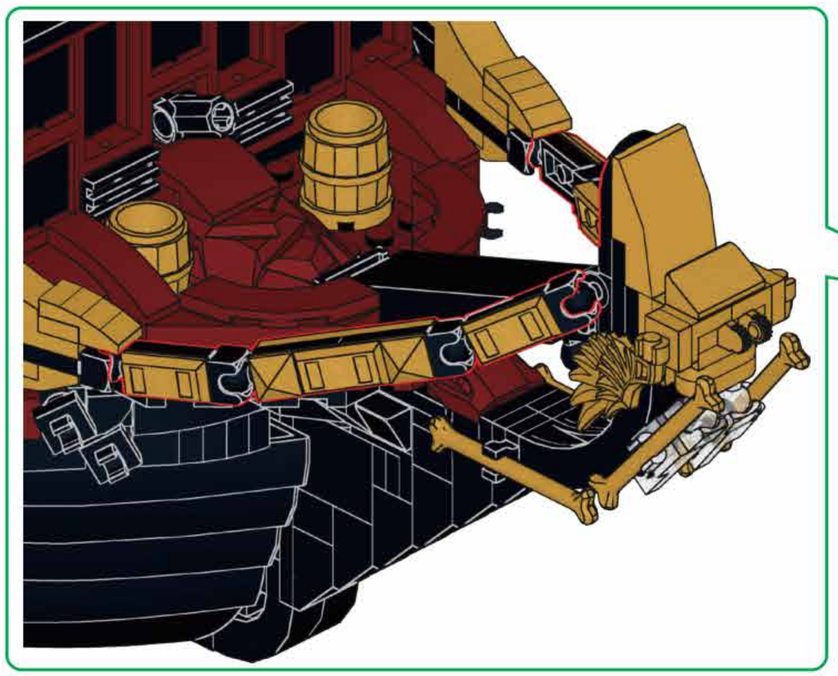

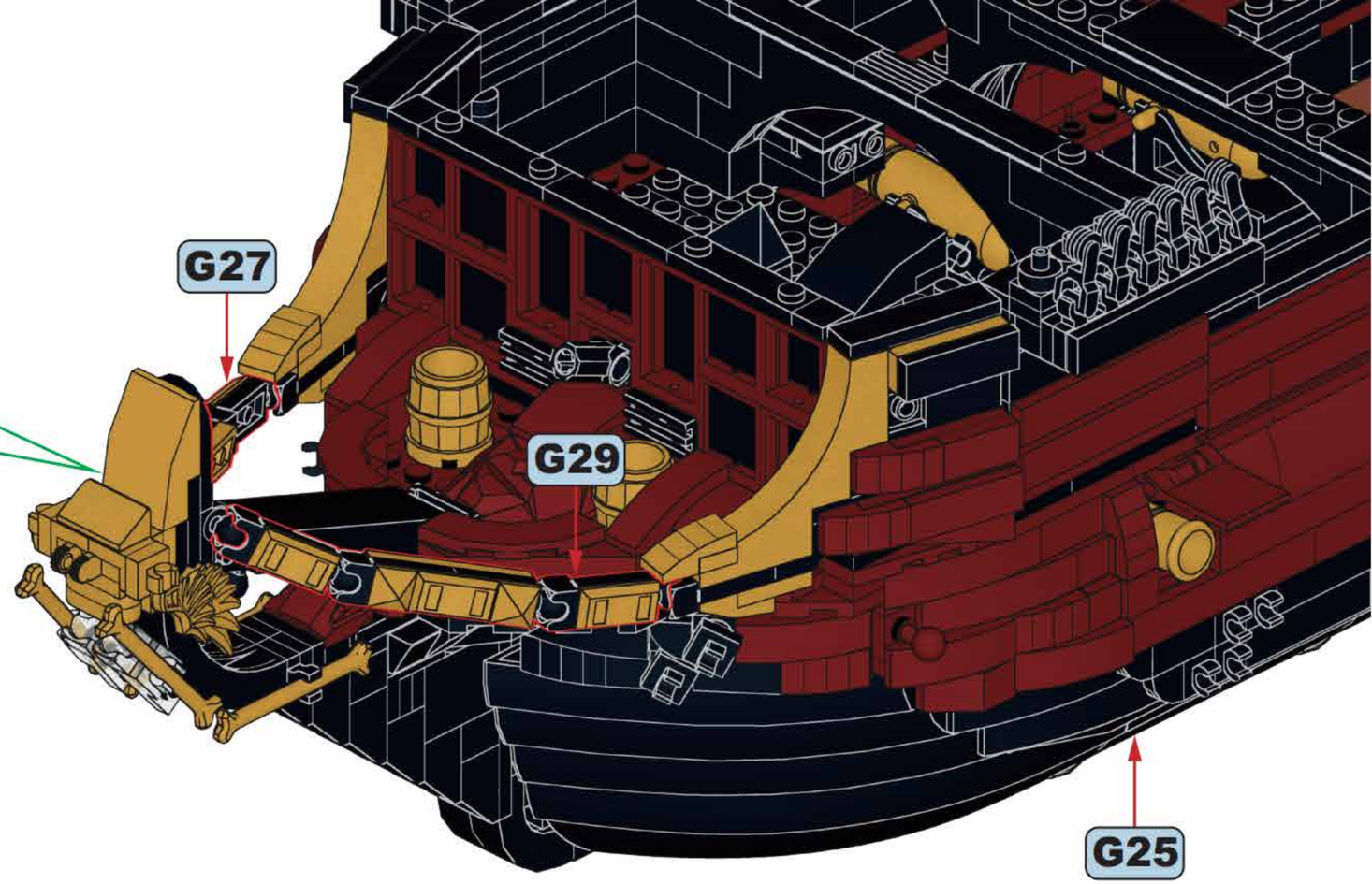

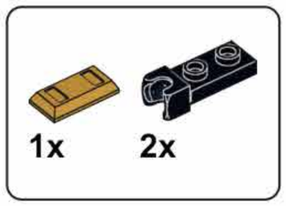

G31

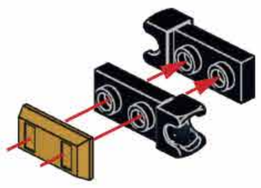

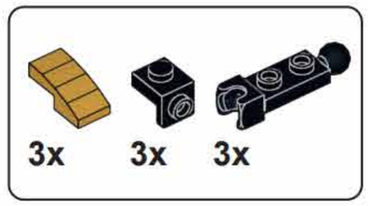

G32

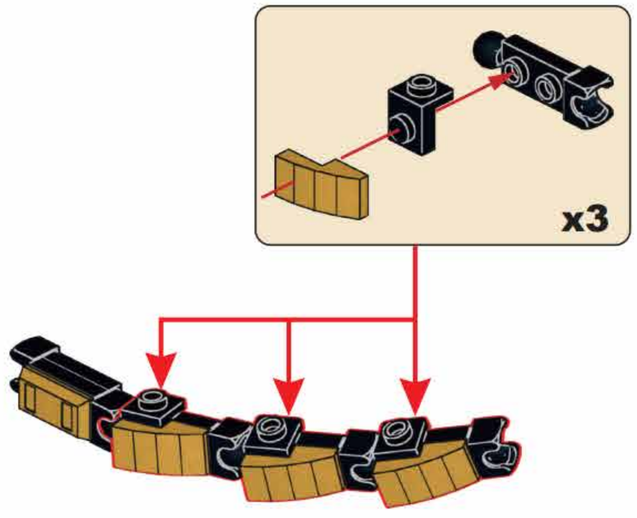

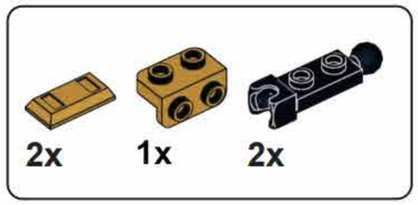

G33

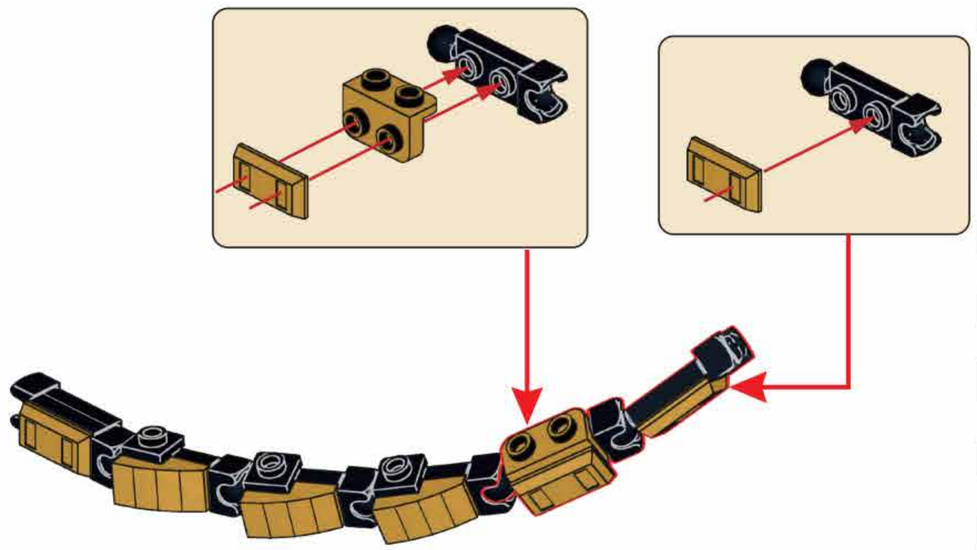

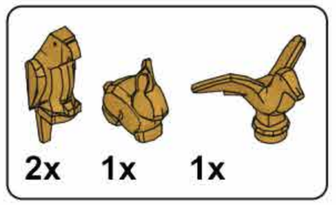

G34

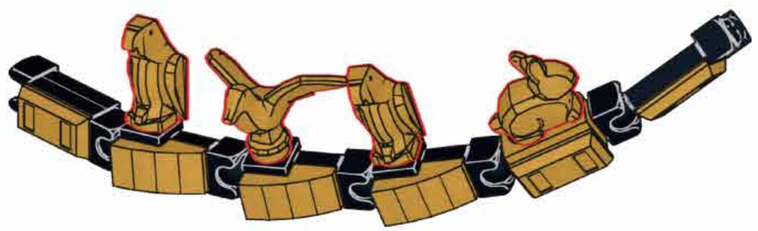

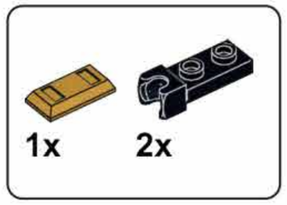

G35

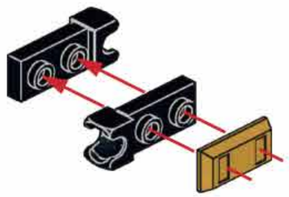

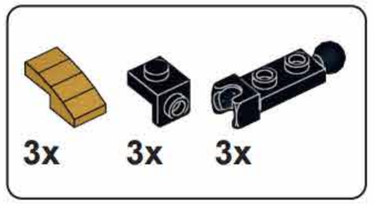

G36

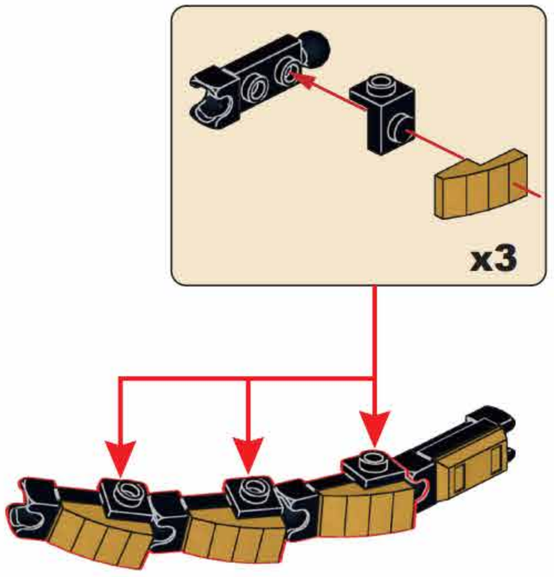

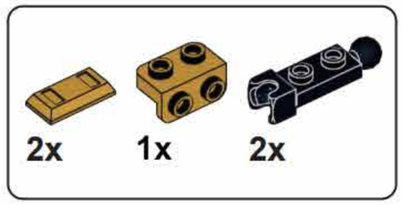

G37

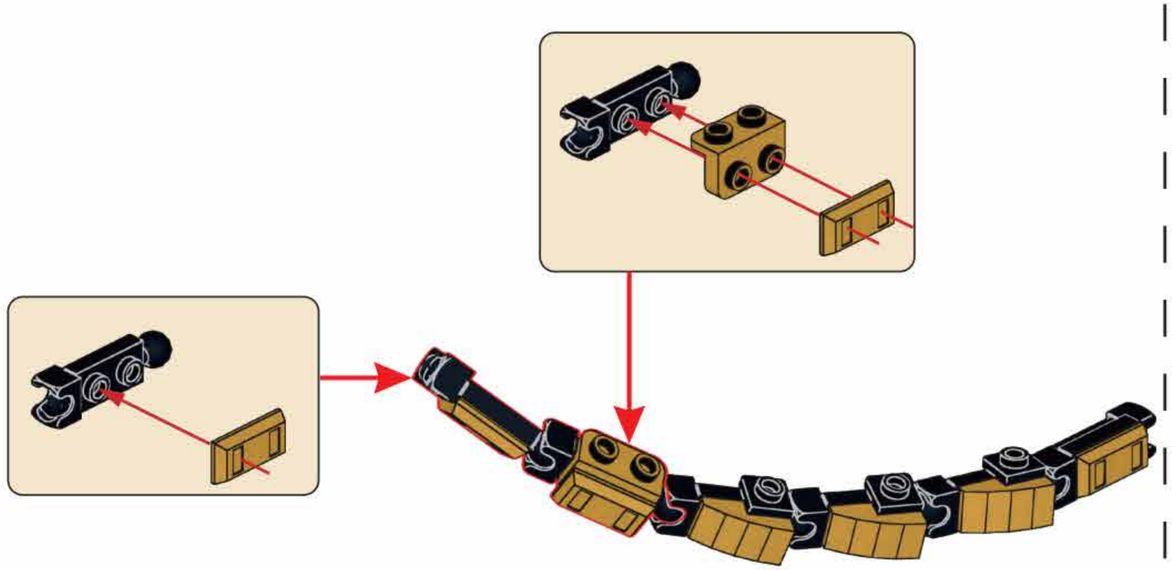

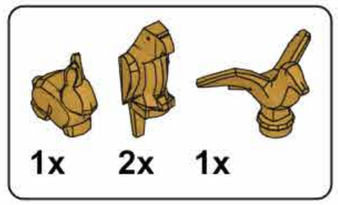

G38

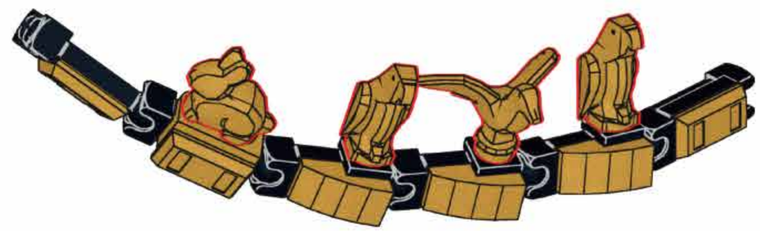

G39

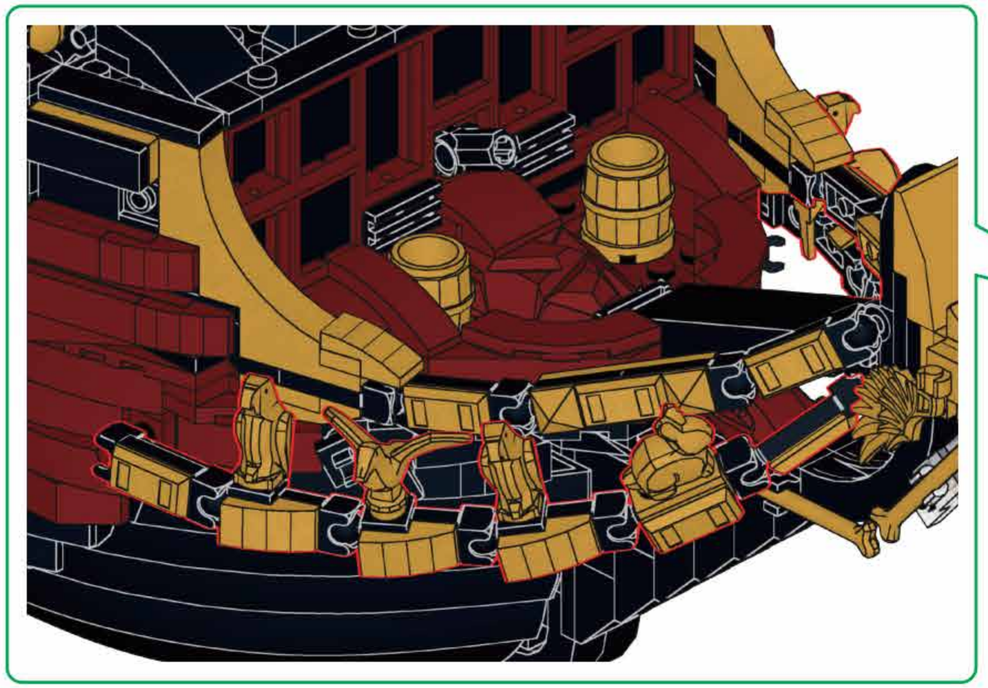

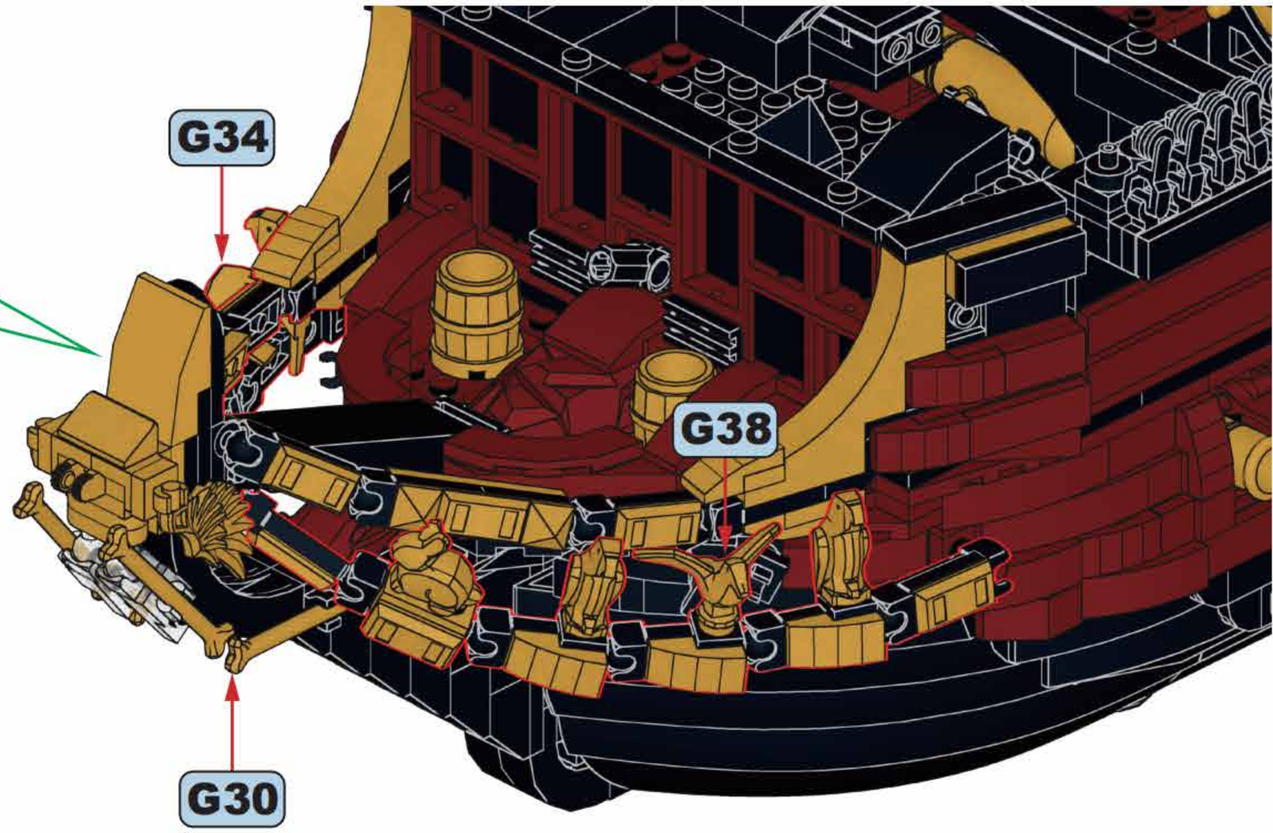

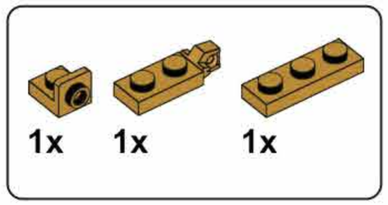

G40

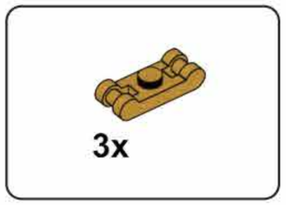

G41

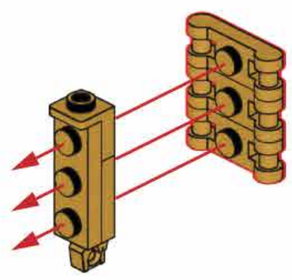

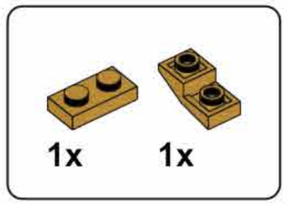

G42

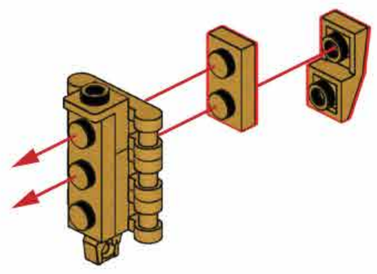

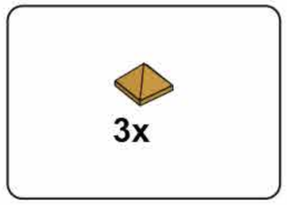

G43

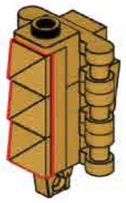

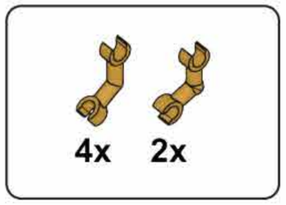

G44

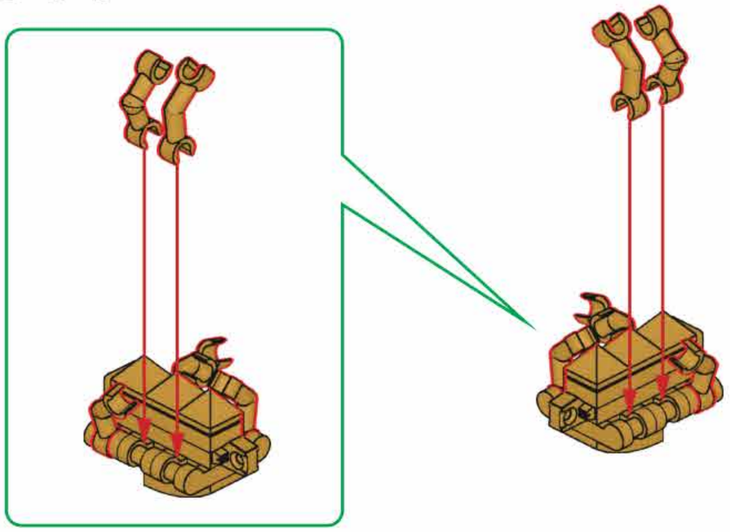

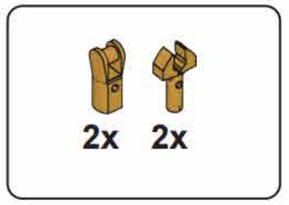

G45

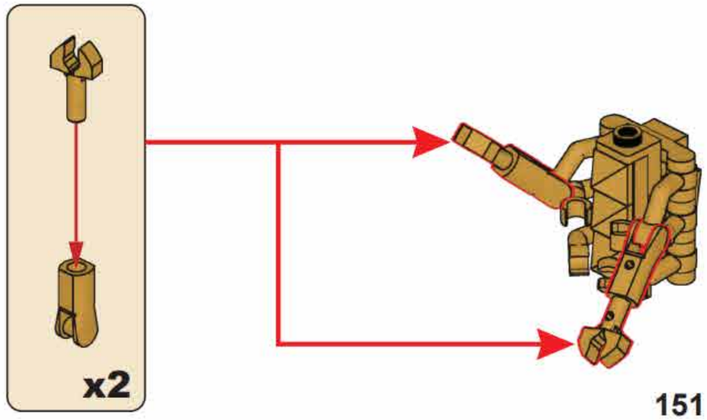

1x 1x 1x 4L 1x 1x

G46

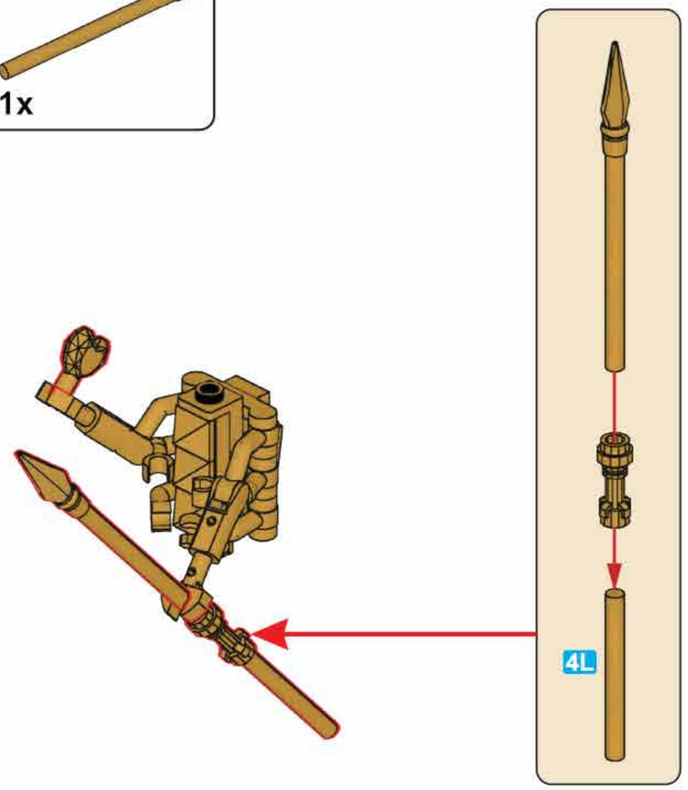

1x

G47

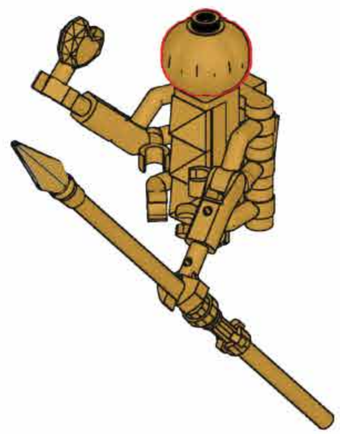

G48

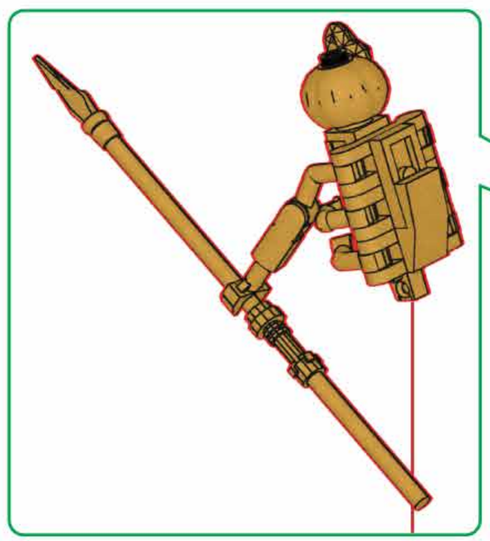

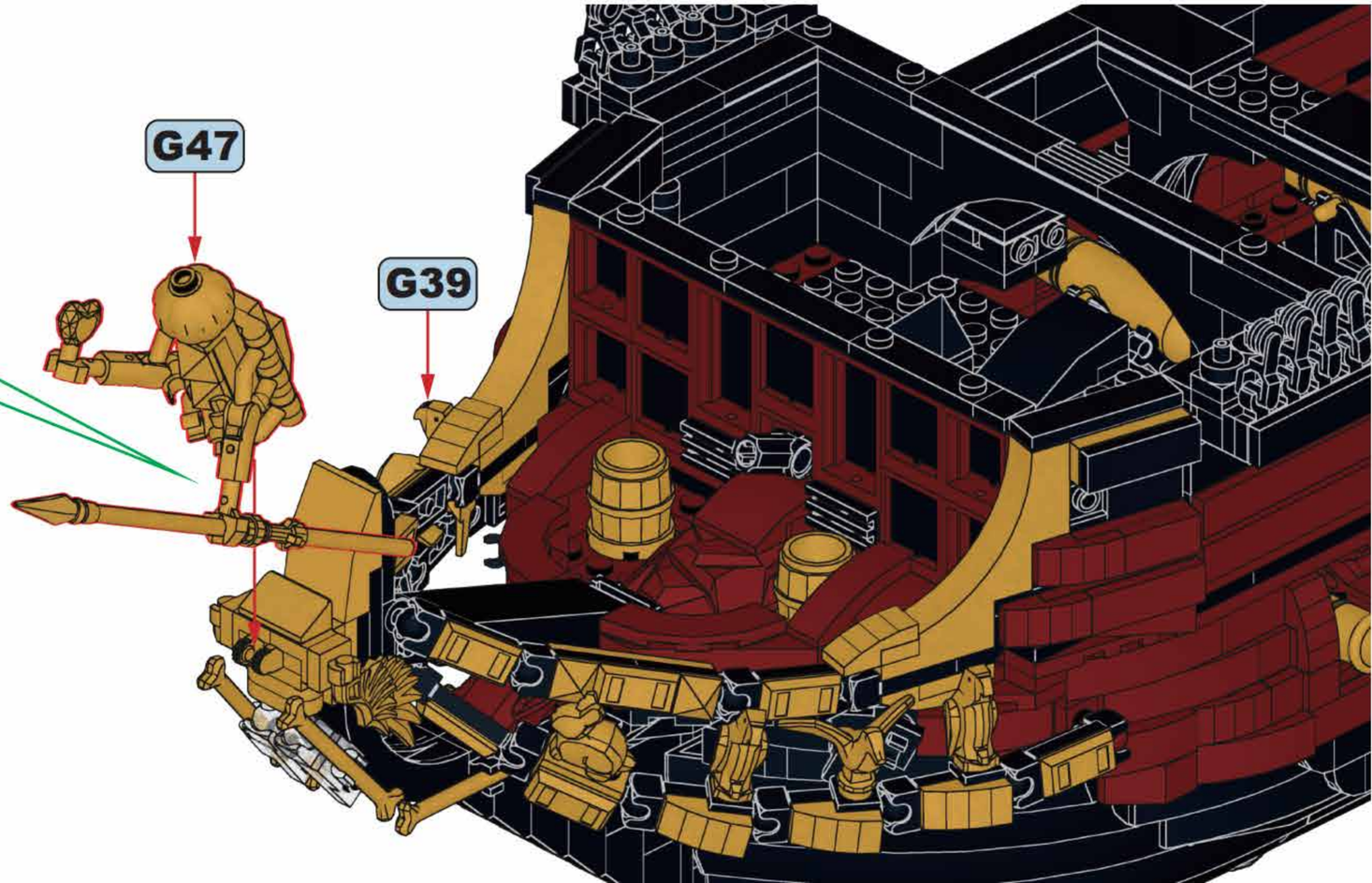

F49

G51

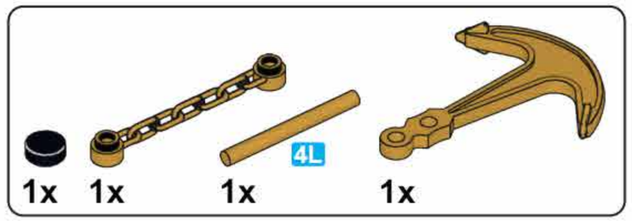

G50

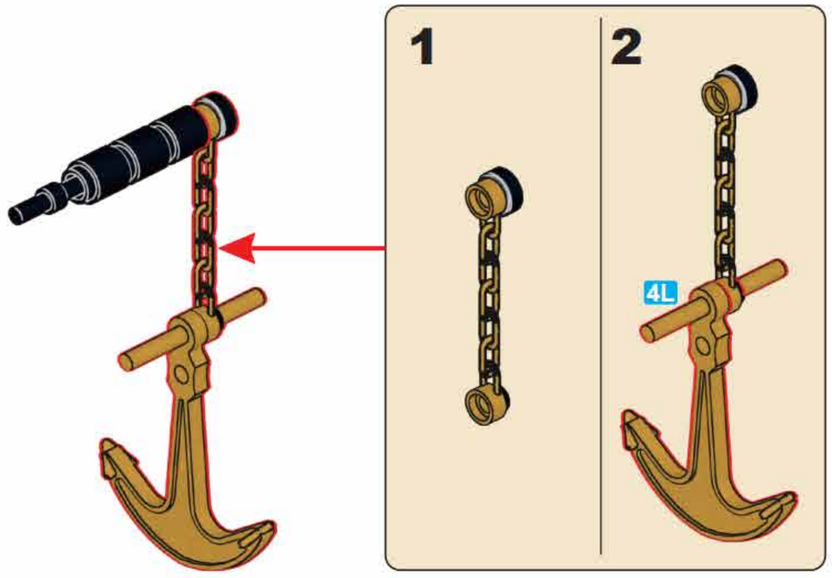

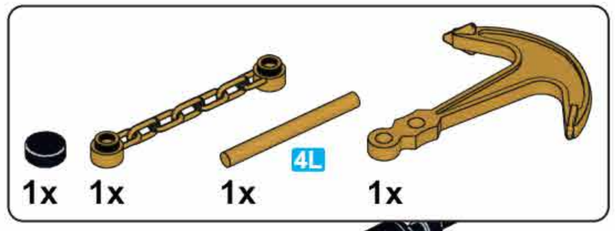

G52

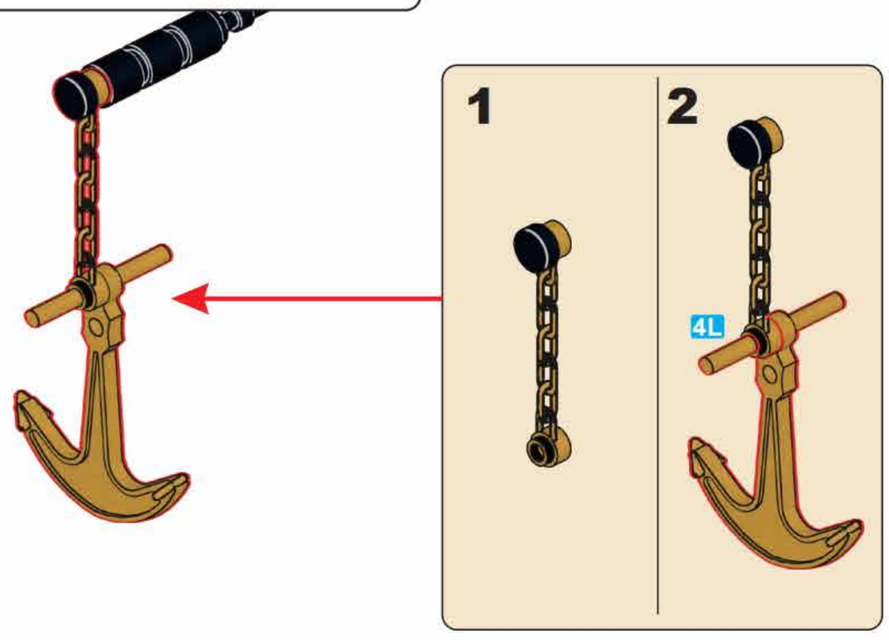

G53

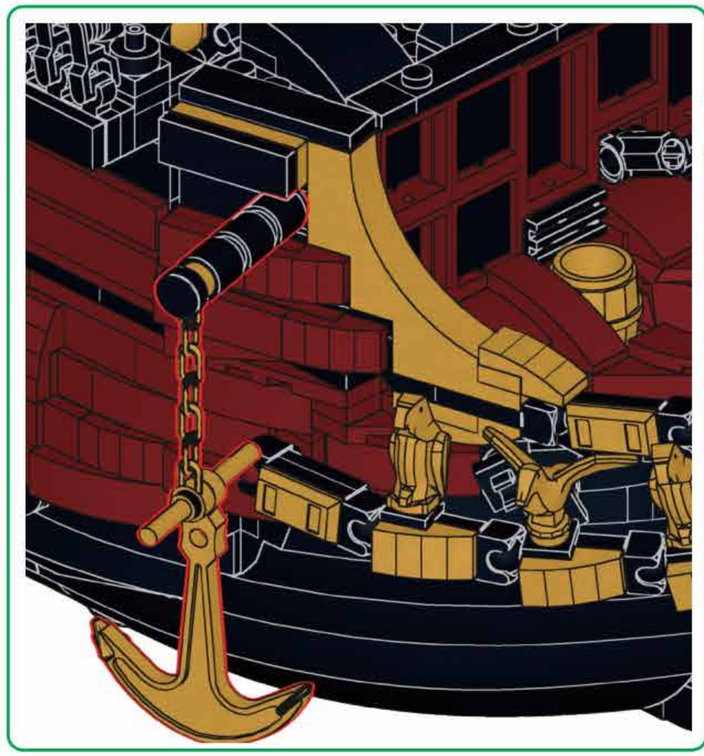

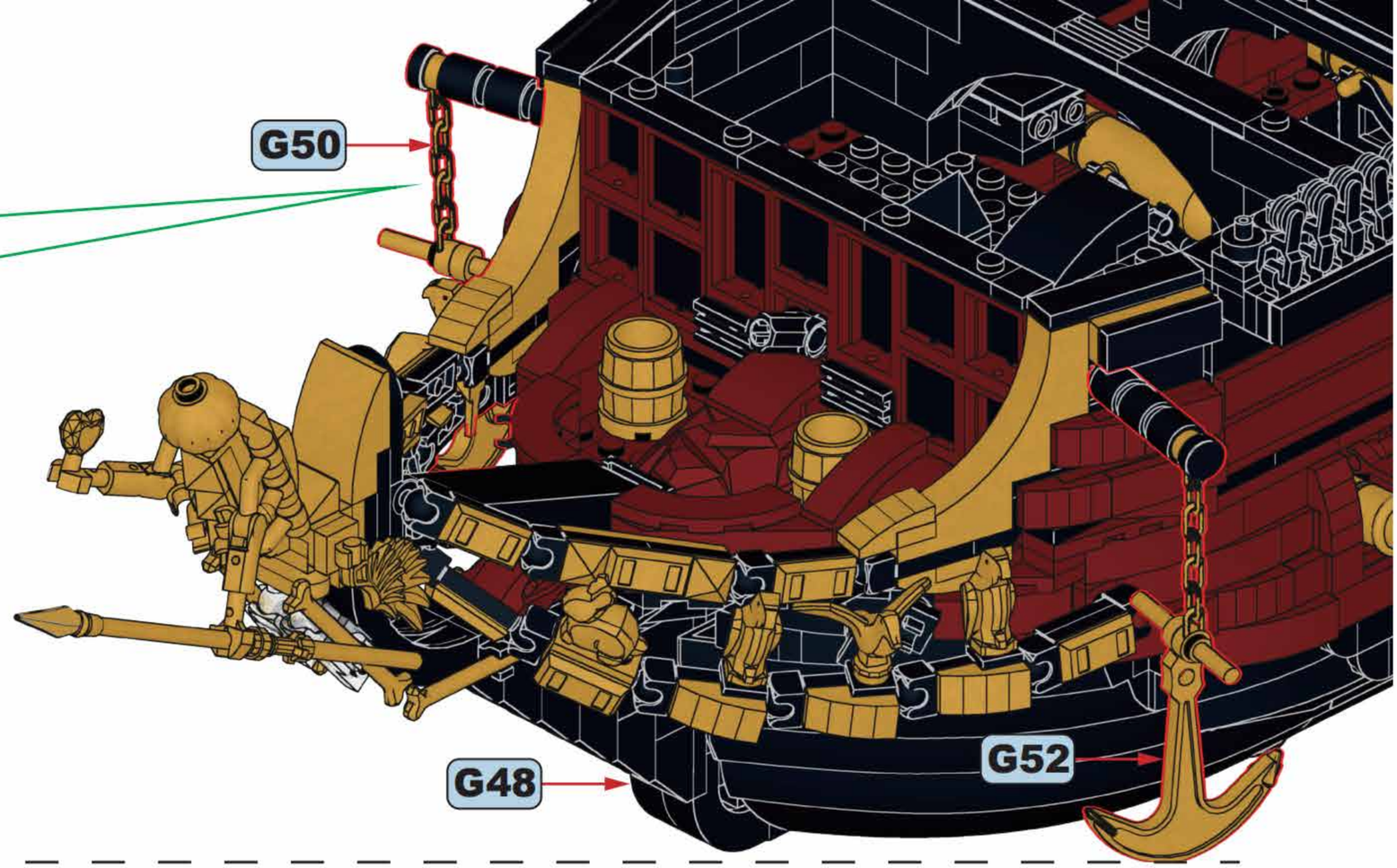

8x

G54

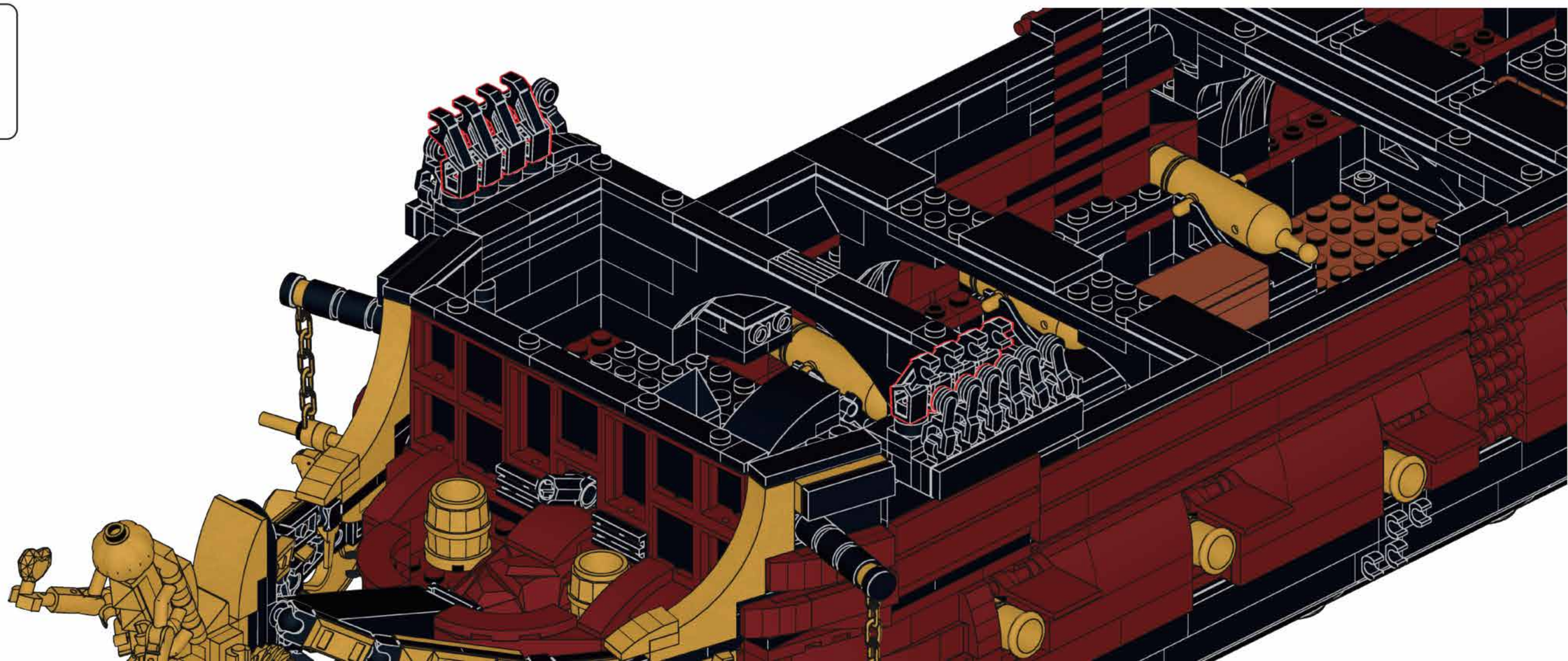

G55

16L
16L
14L
10L
14L
14L
32L
16L
16L

1

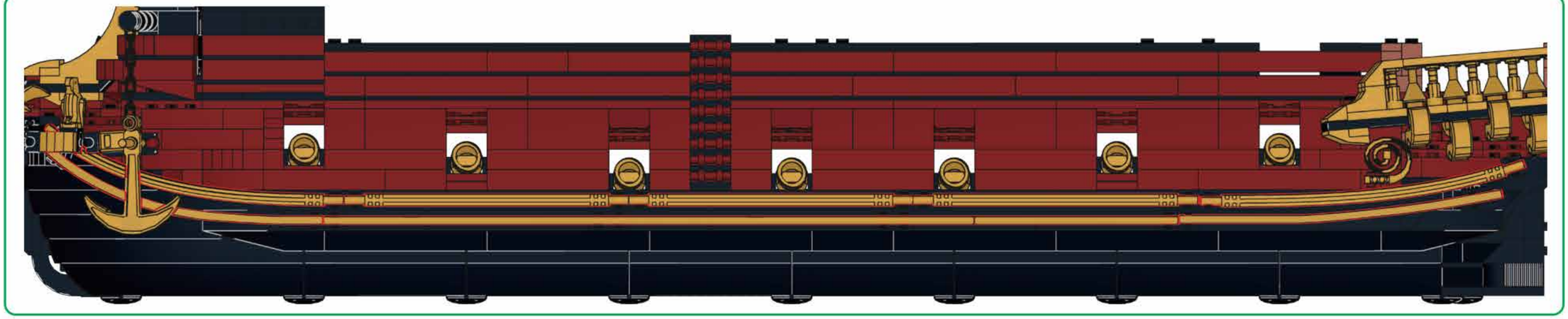

16L
16L
14L
10L
14L
32L
14L
16L
16L
16L

2

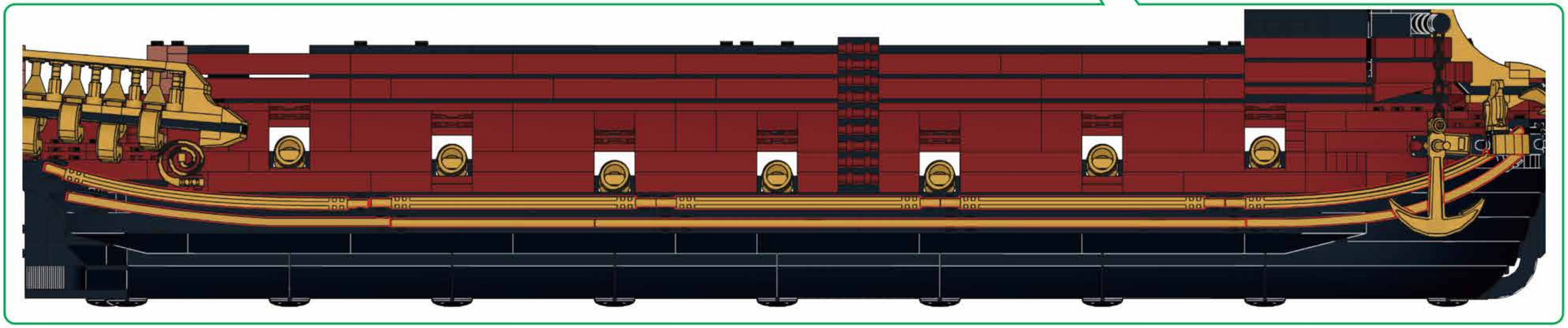

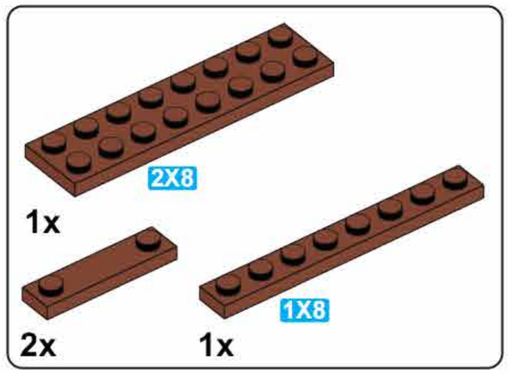

G56

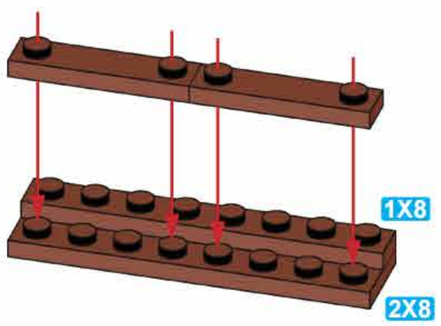

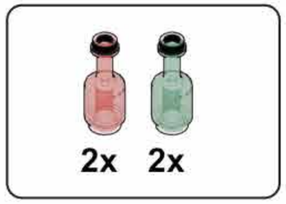

G57

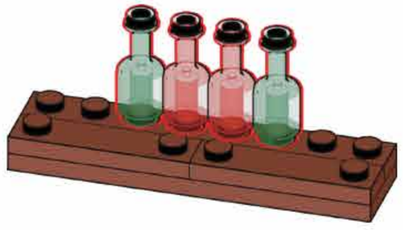

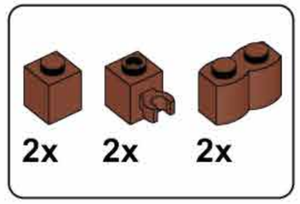

G58

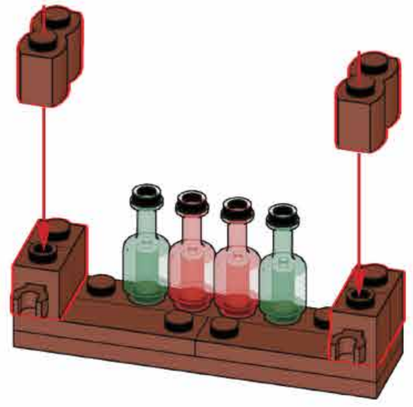

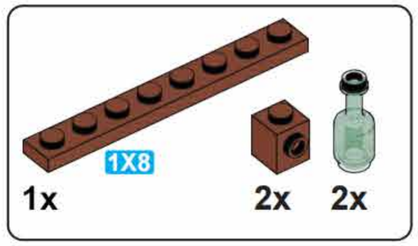

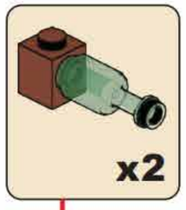

G59

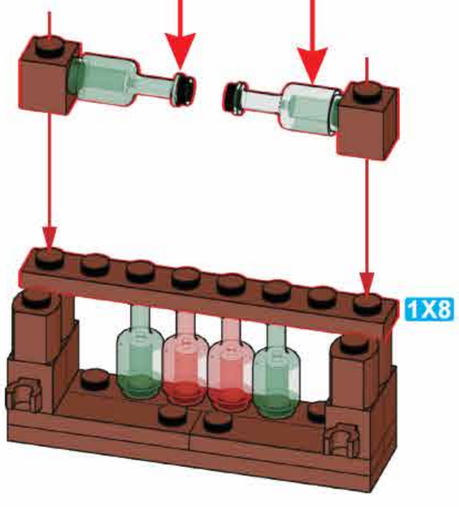

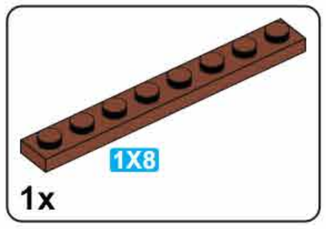

G60

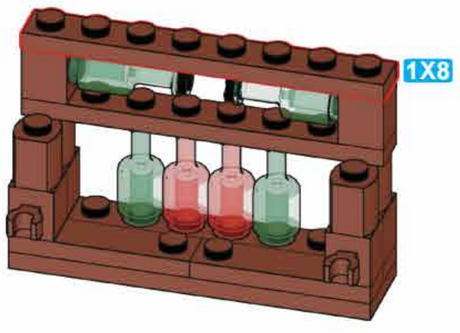

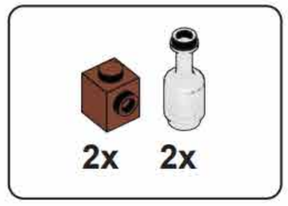

G61

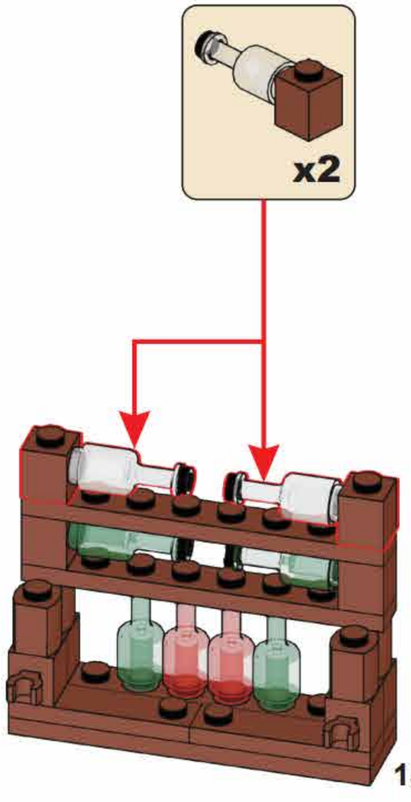

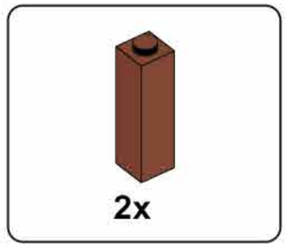

G62

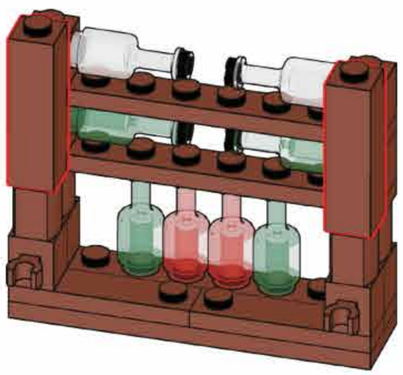

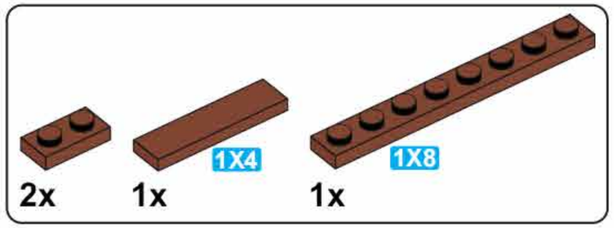

G63

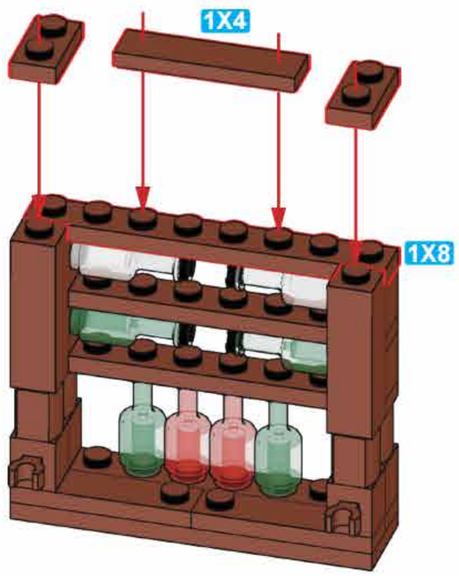

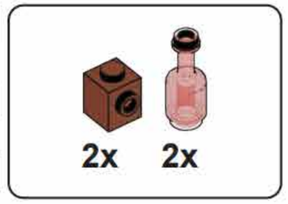

G64

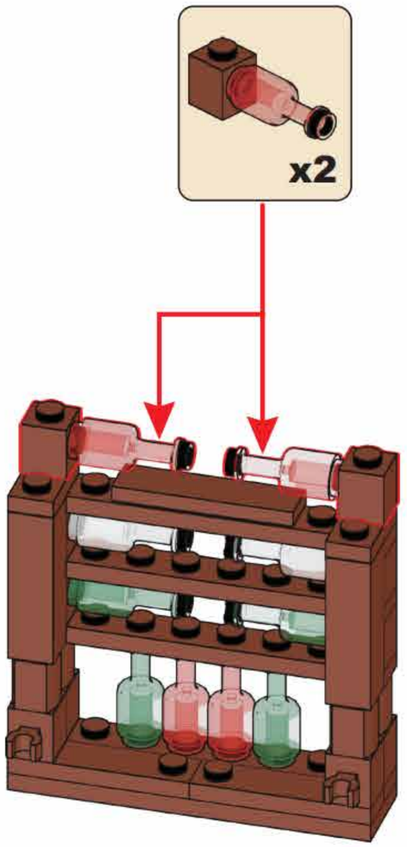

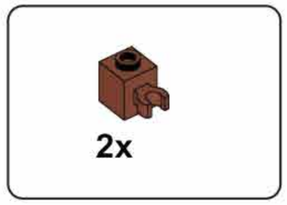

G65

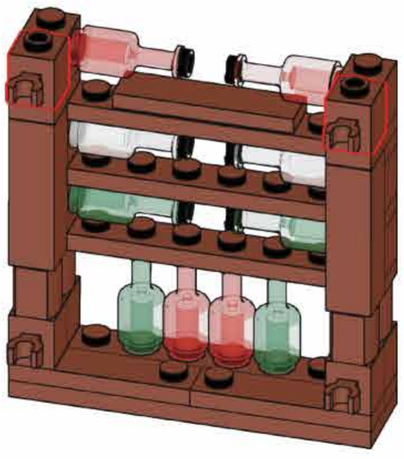

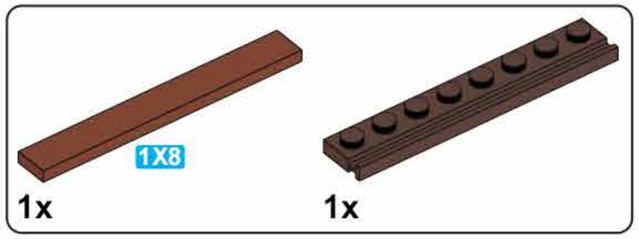

G66

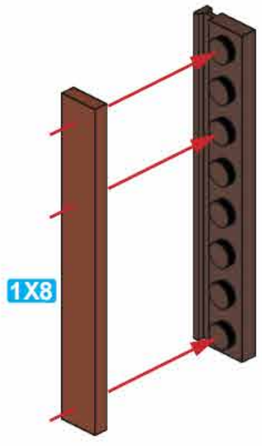

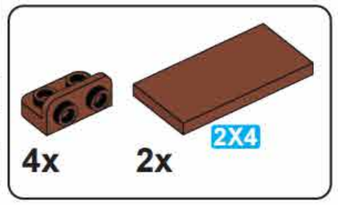

G67

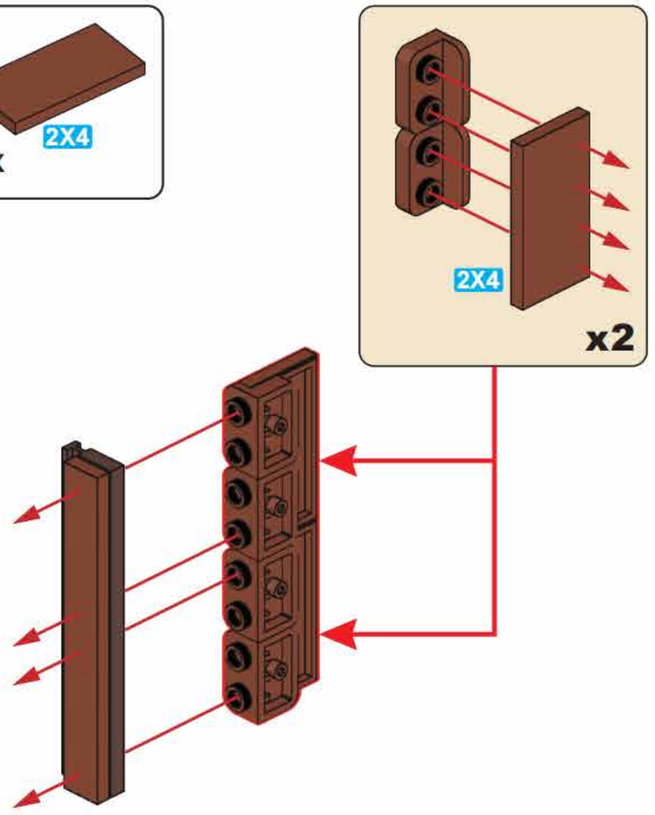

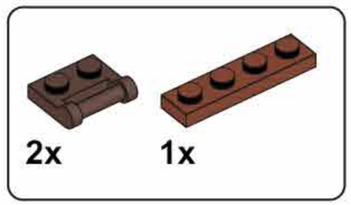

G68

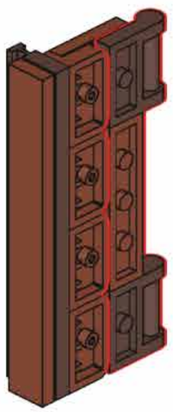

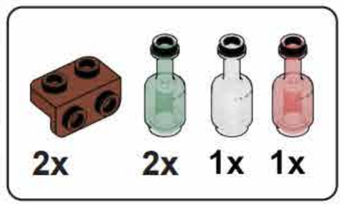

G69

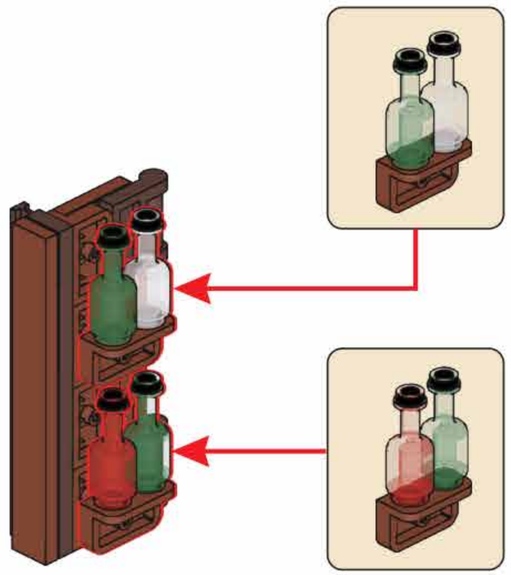

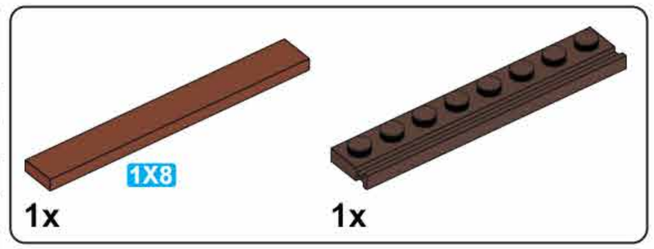

G70

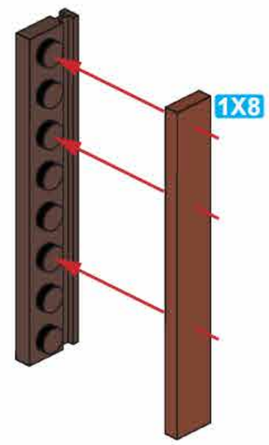

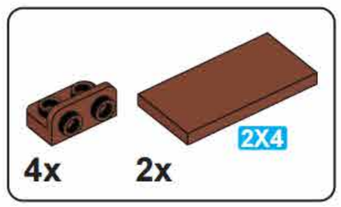

G71

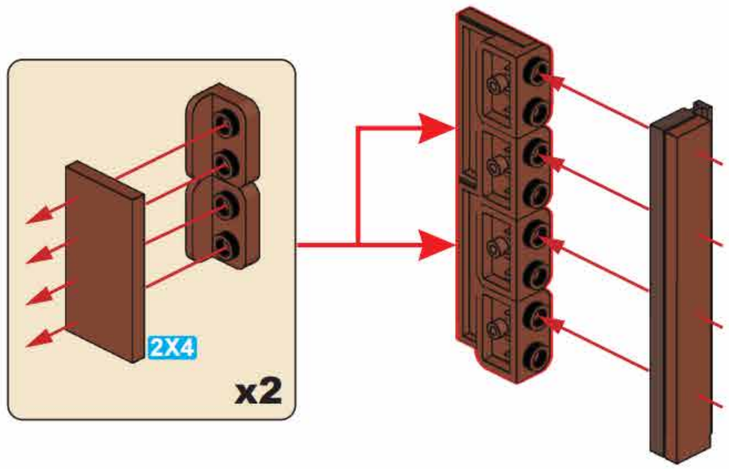

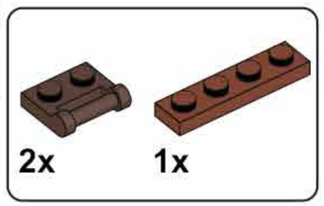

G72

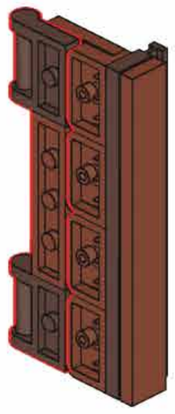

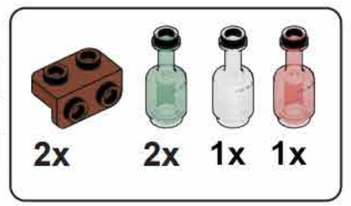

G73

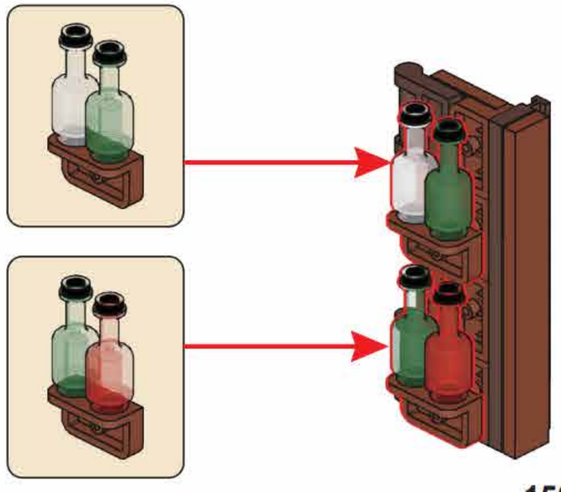

G74

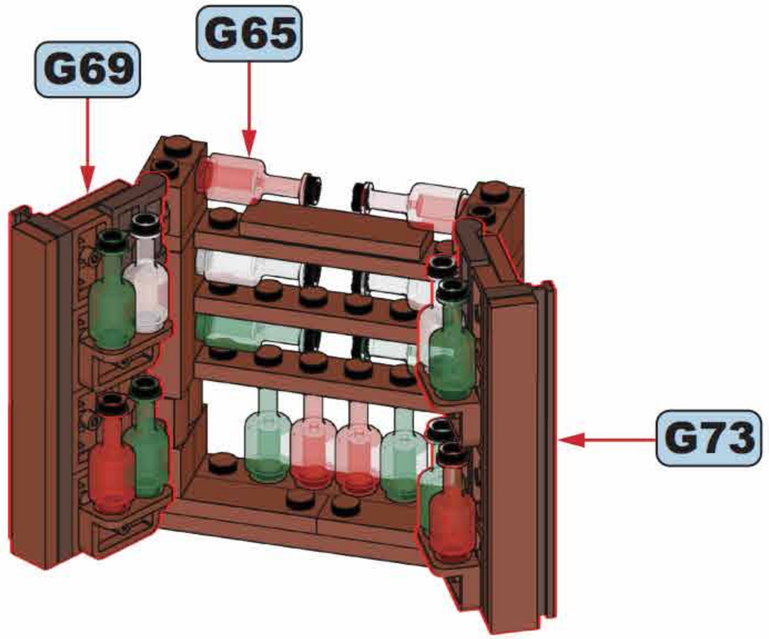

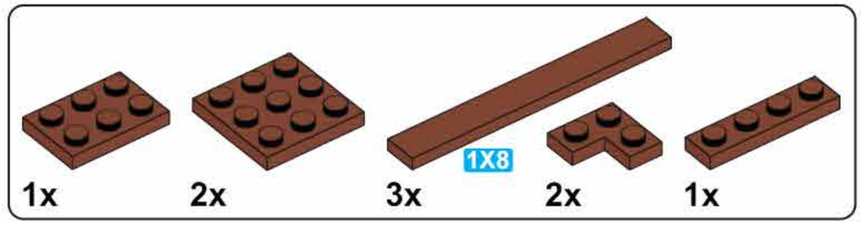

G75

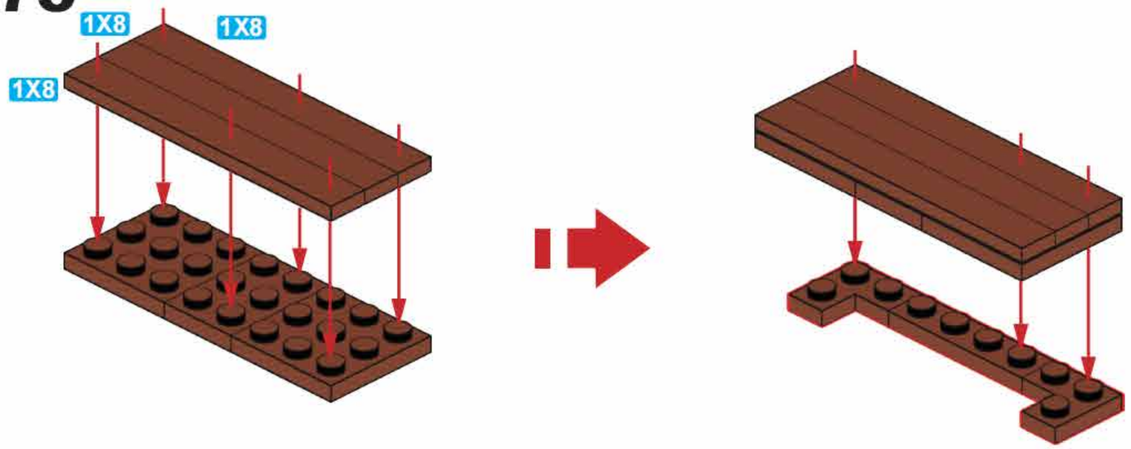

G76

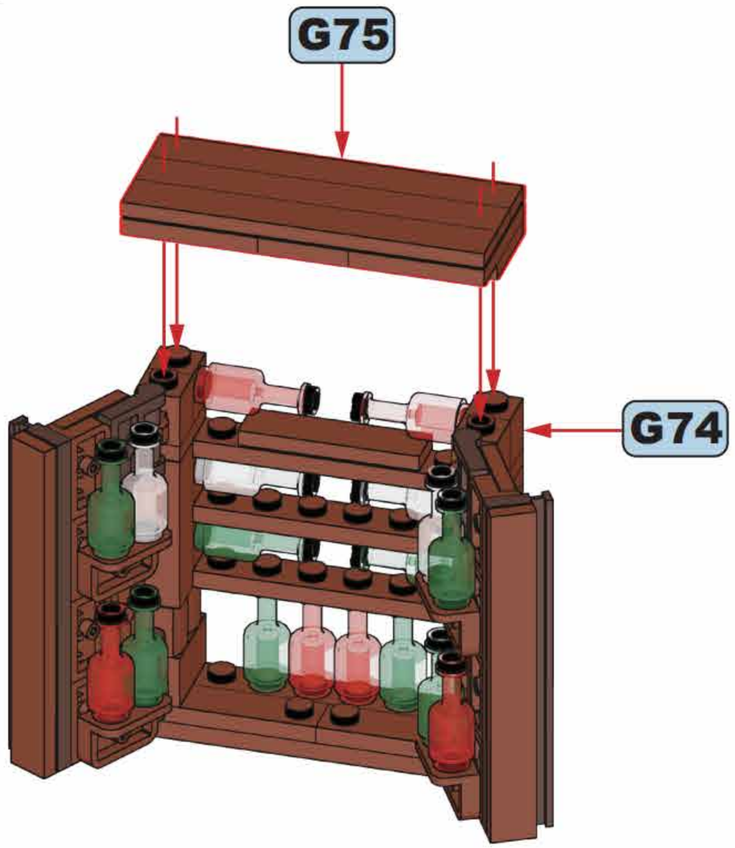

G77

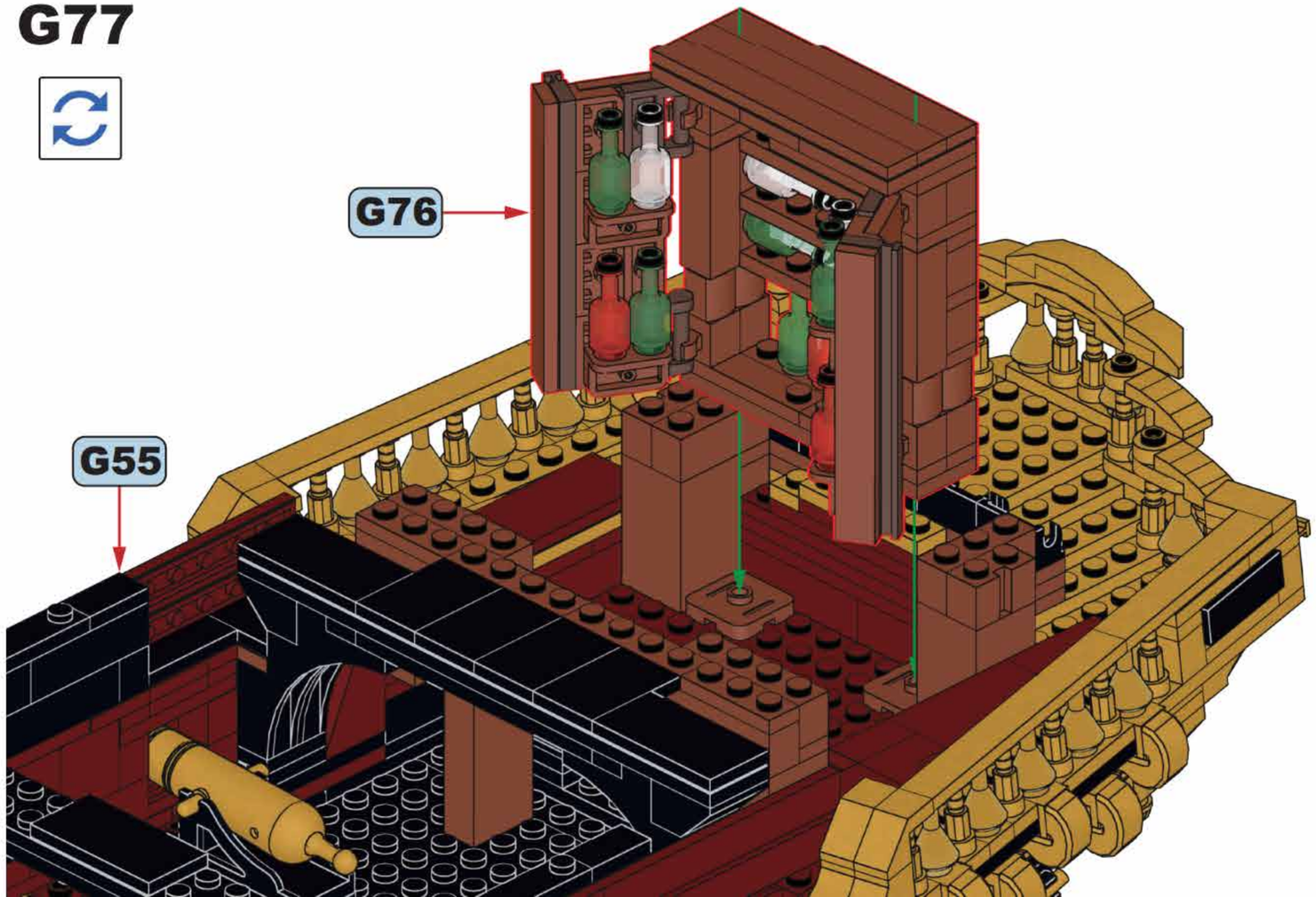

H

4x

1x

4X12

H1

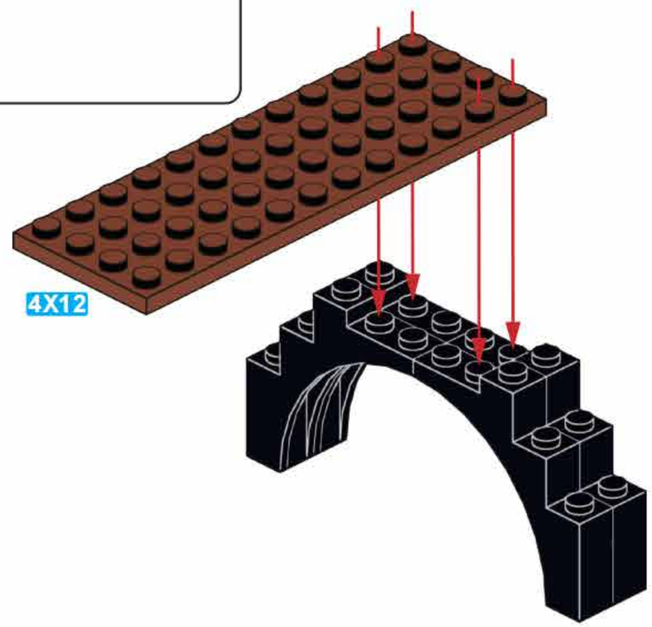

2x

1X6

1x

H2

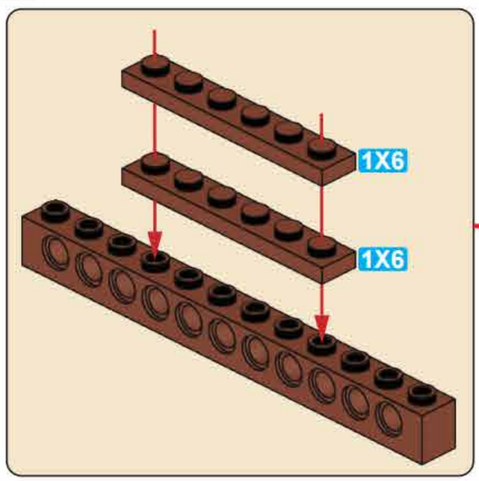

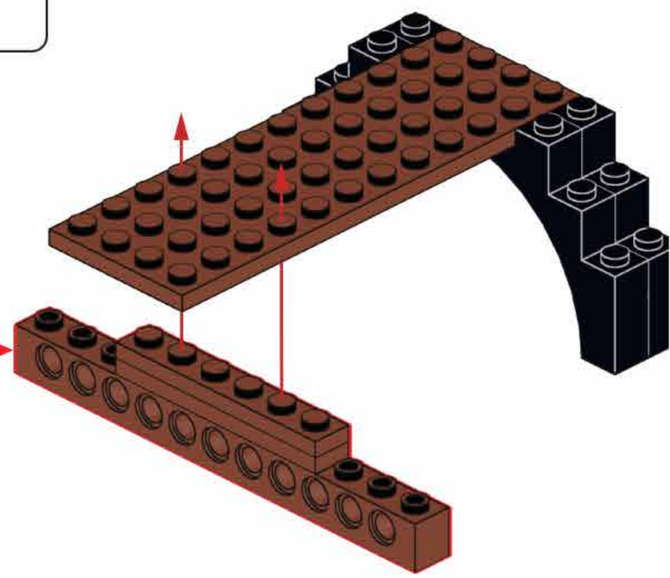

4x

H3

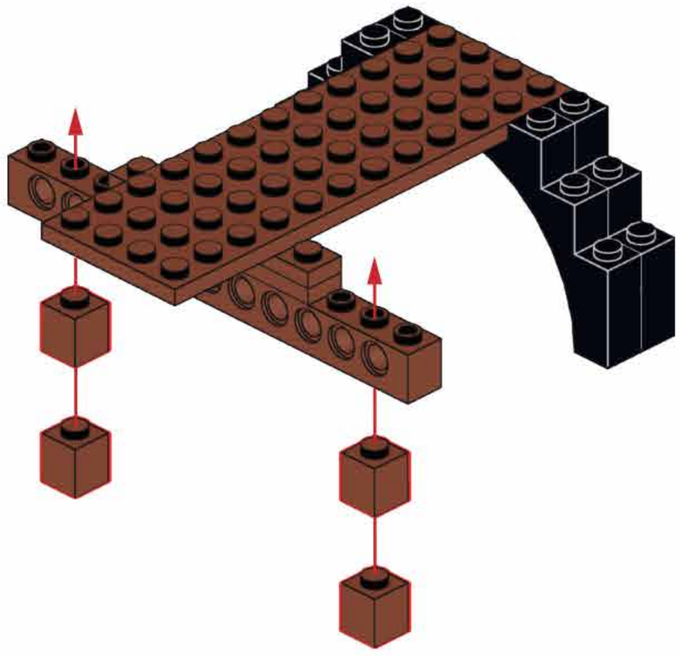

2x

H4

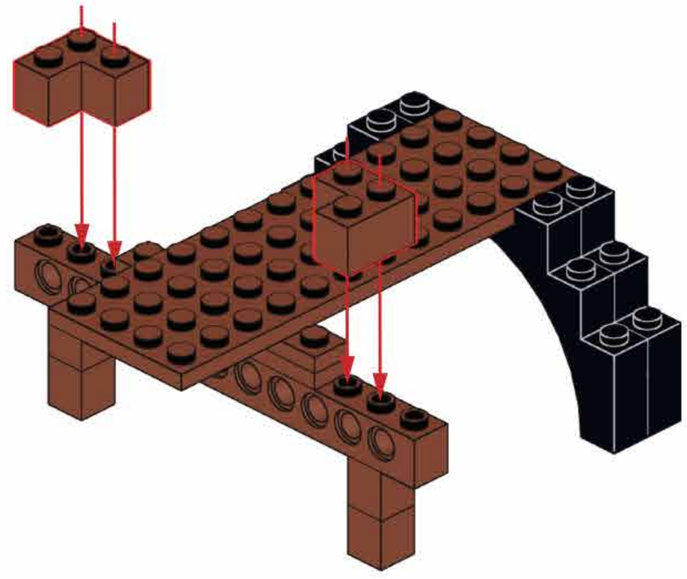

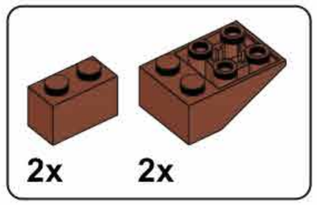

H5

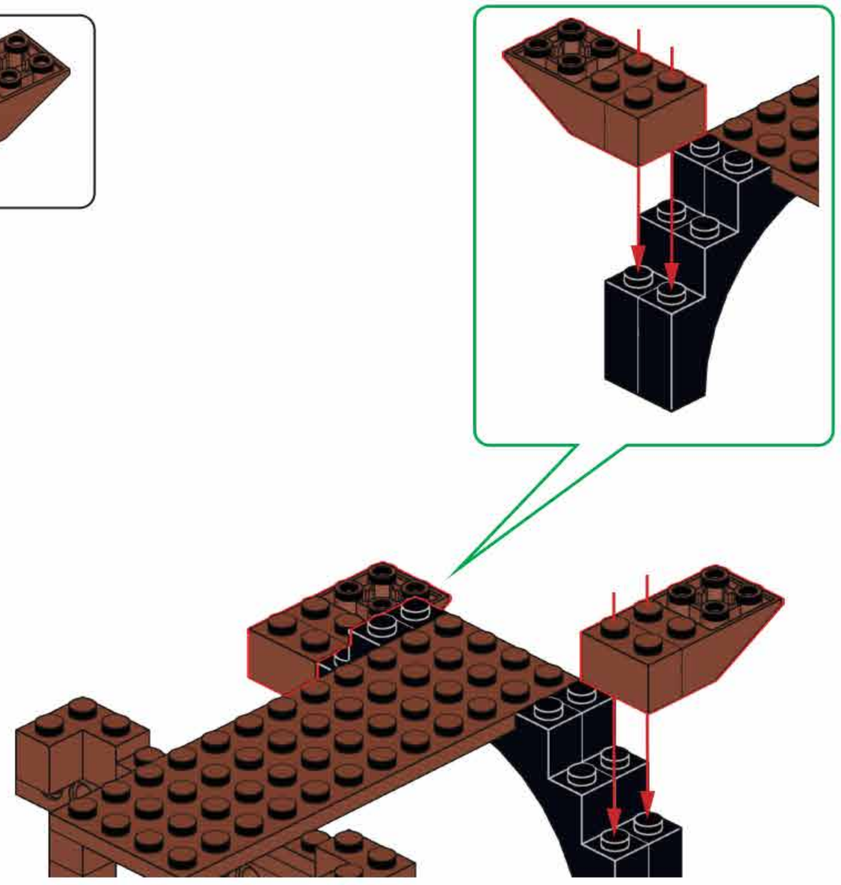

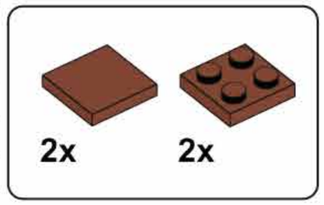

H6

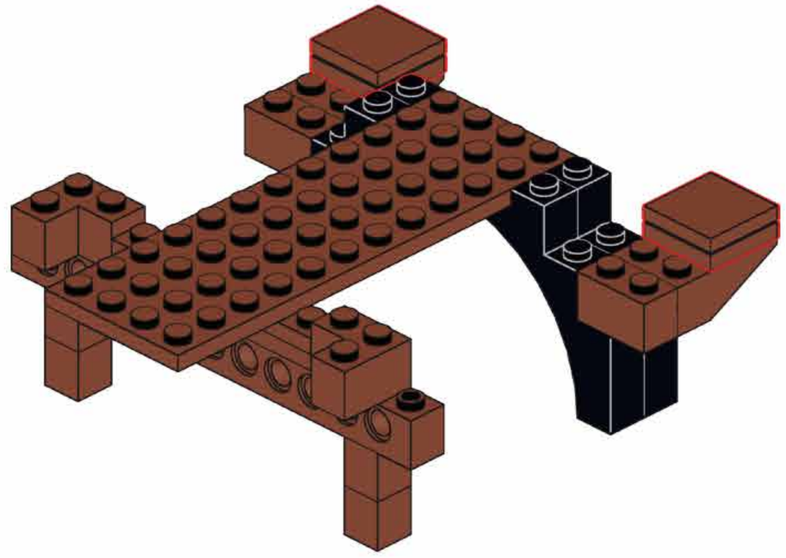

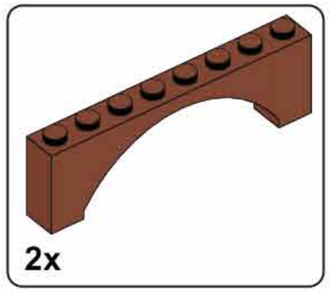

H7

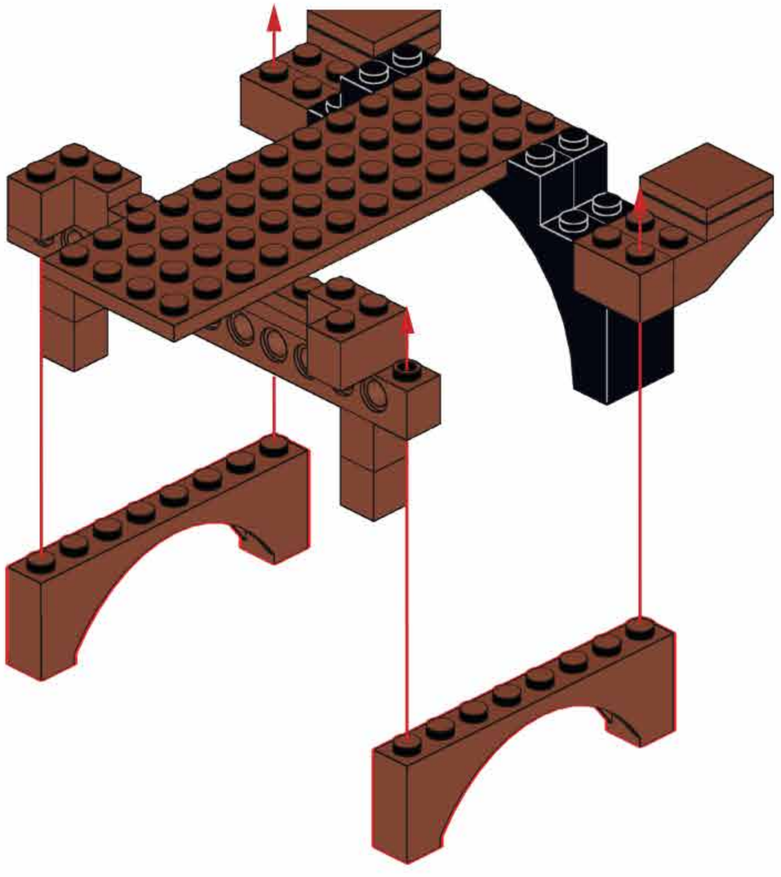

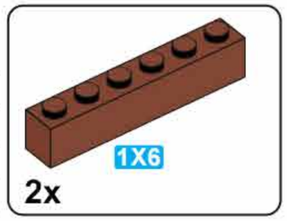

H8

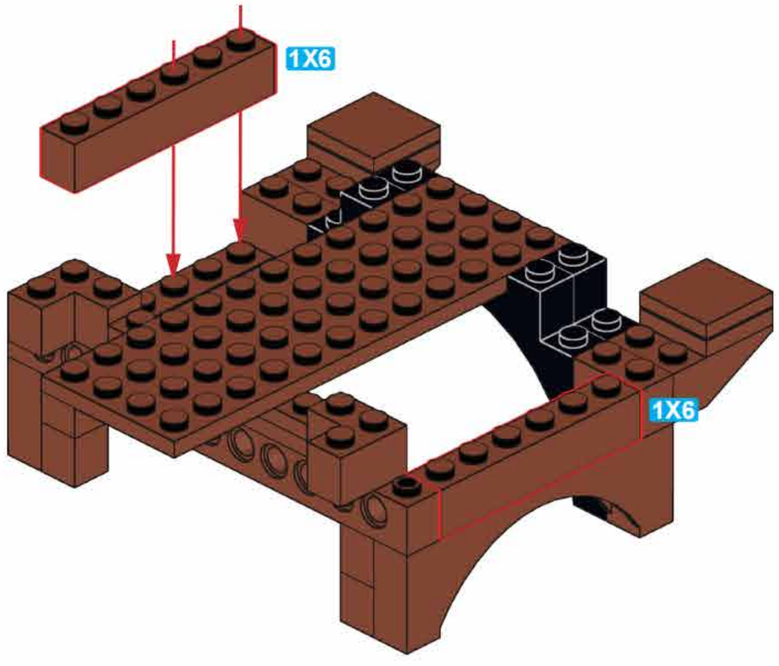

4x

H9

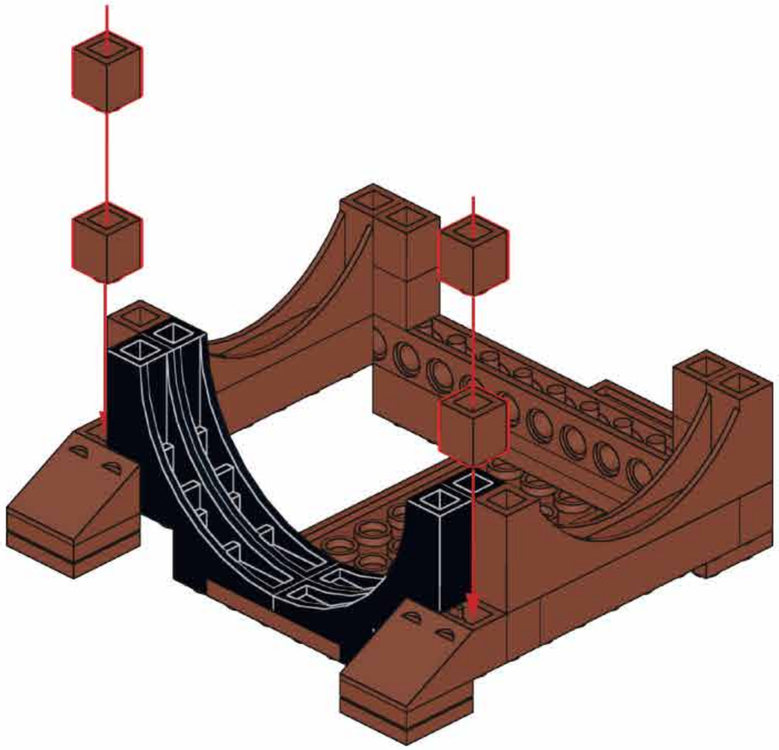

1X10

2x 2x

H10

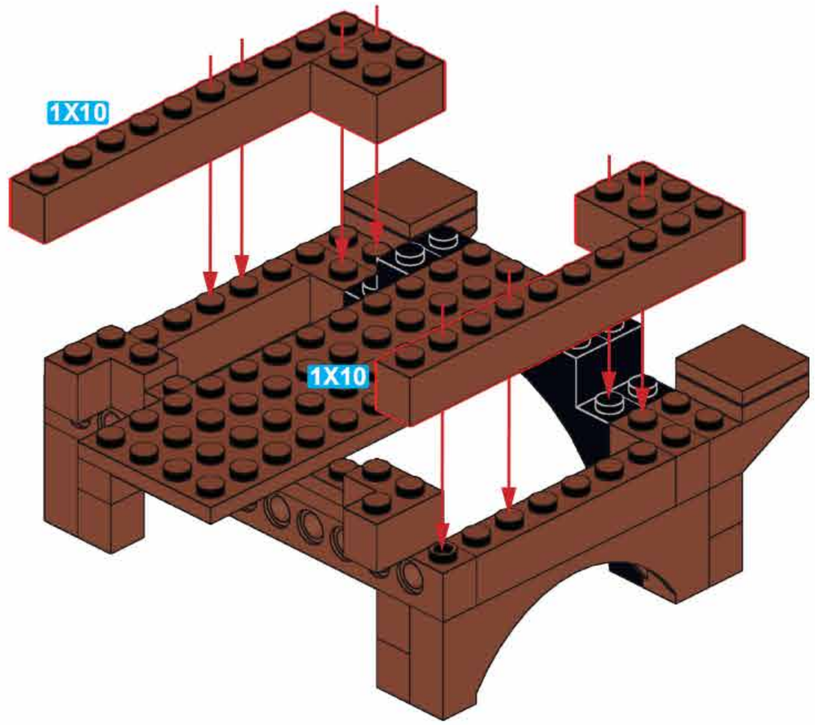

2x 2x

H11

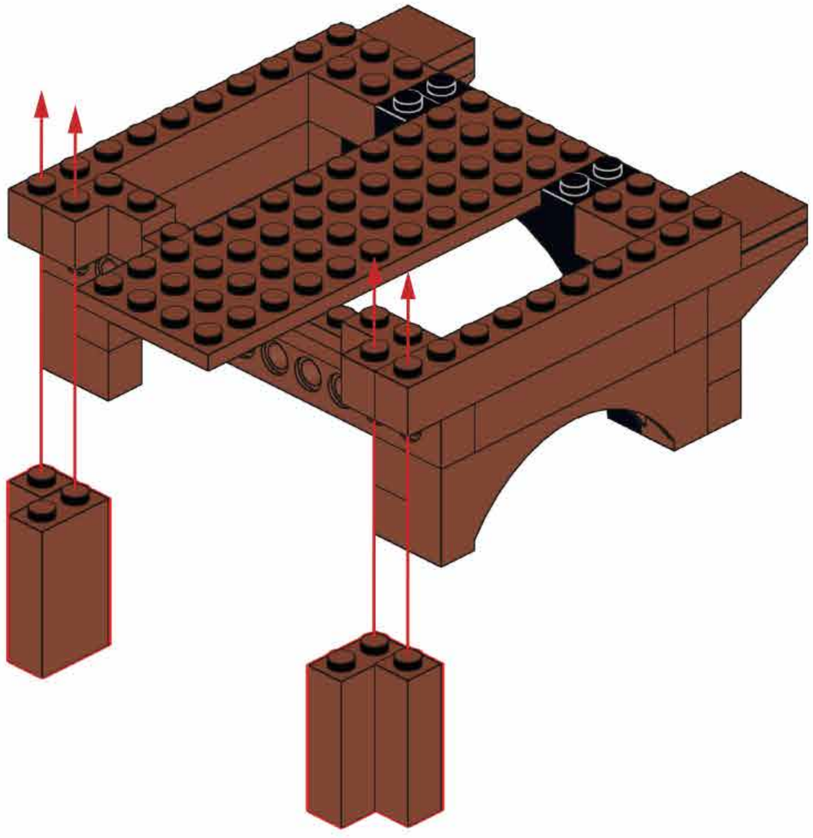

2x 2x

H12

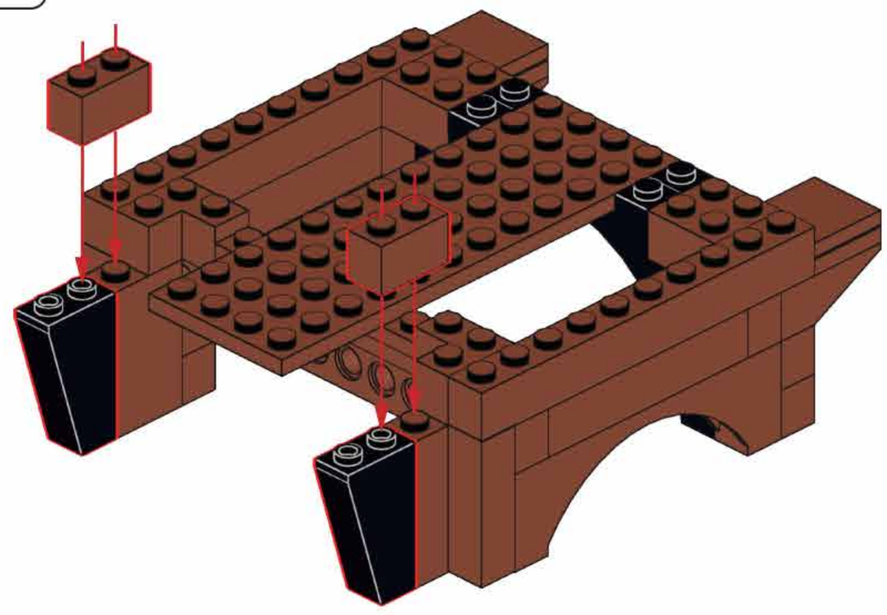

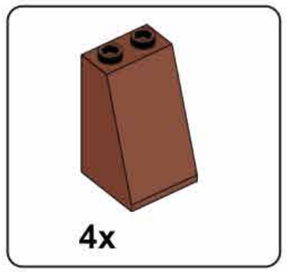

H13

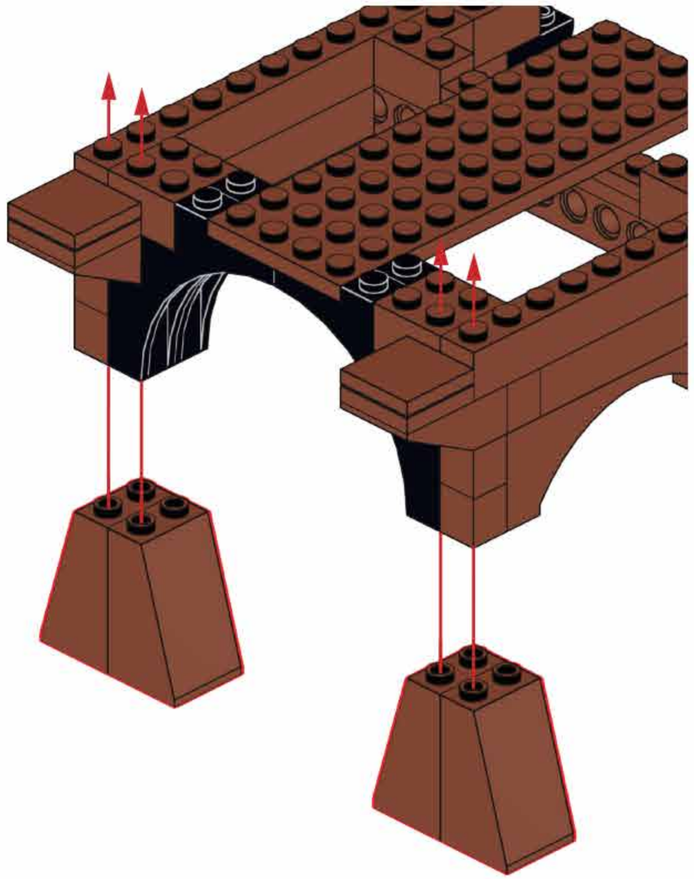

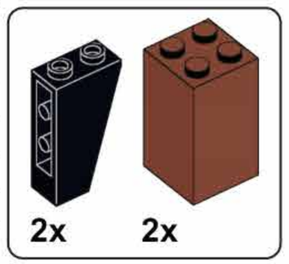

H14

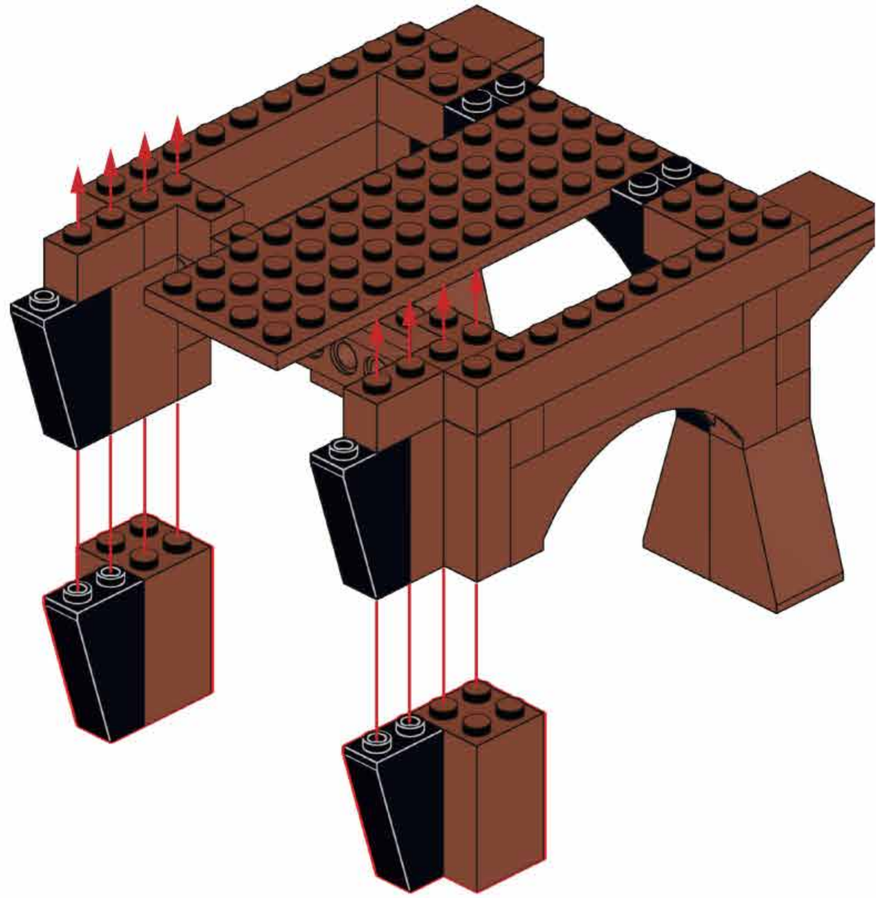

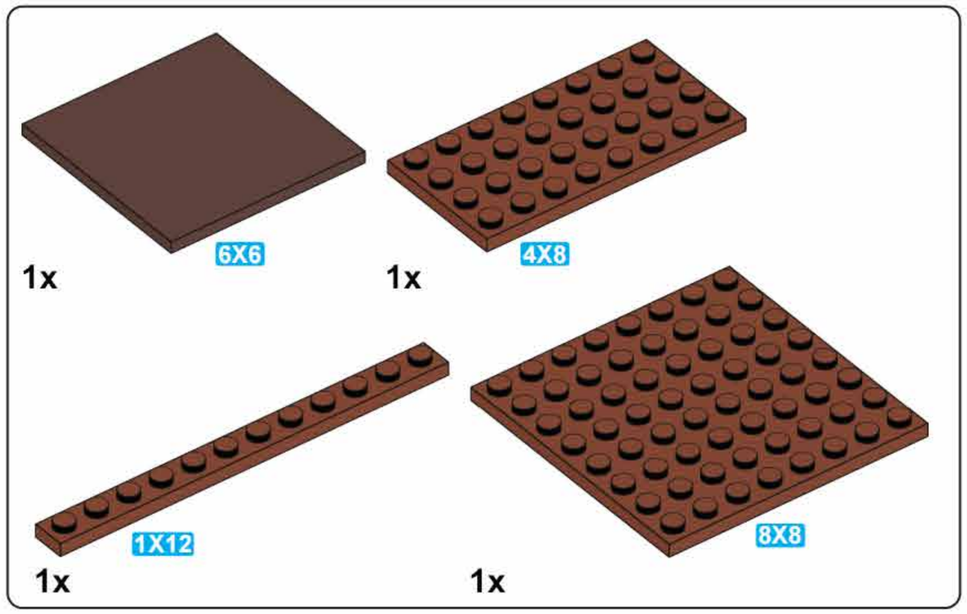

H15

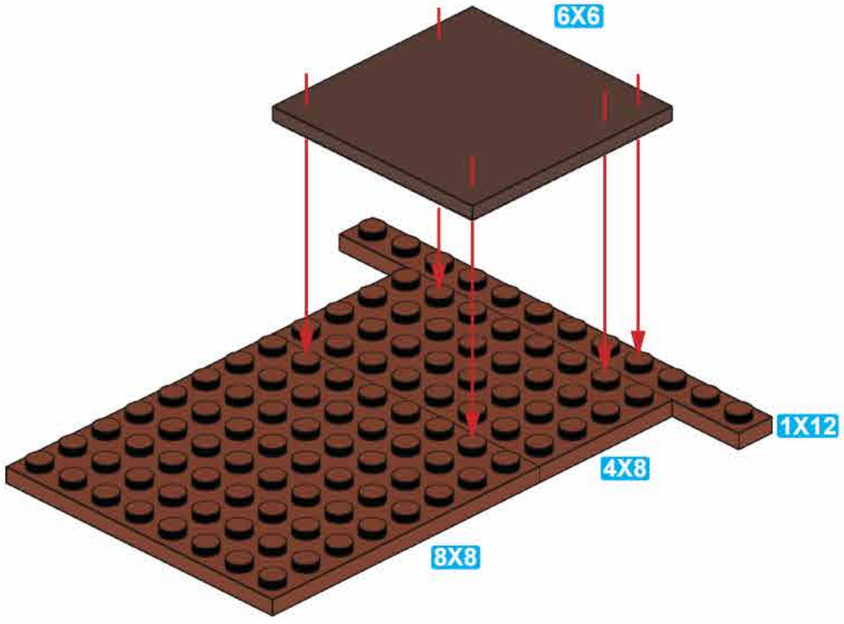

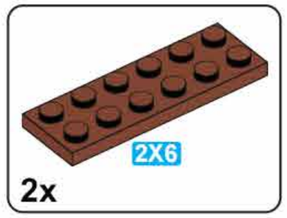

H16

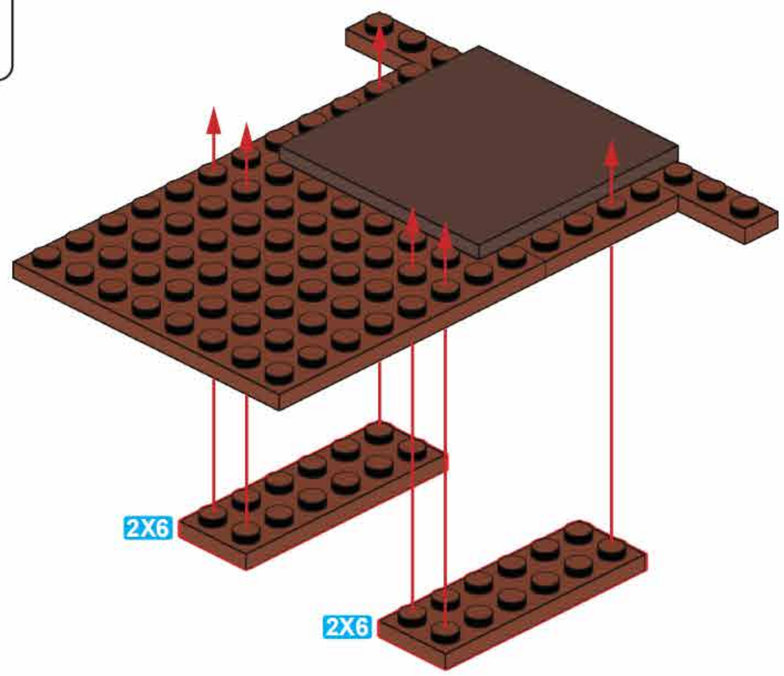

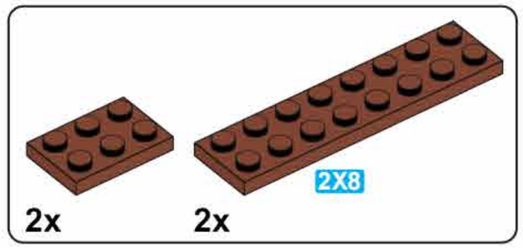

H17

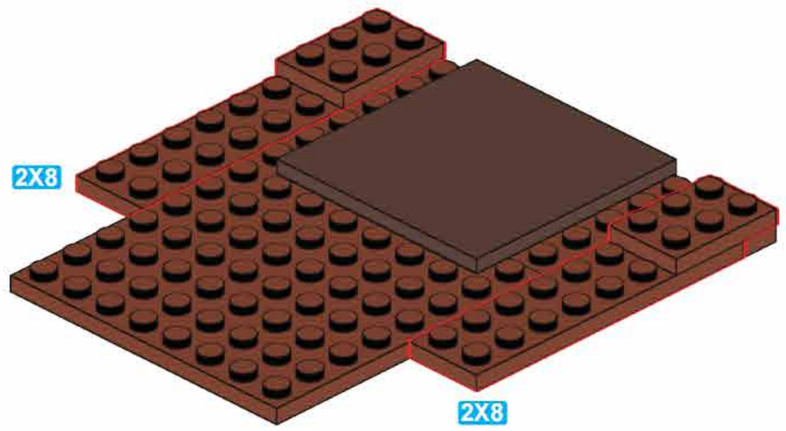

H18

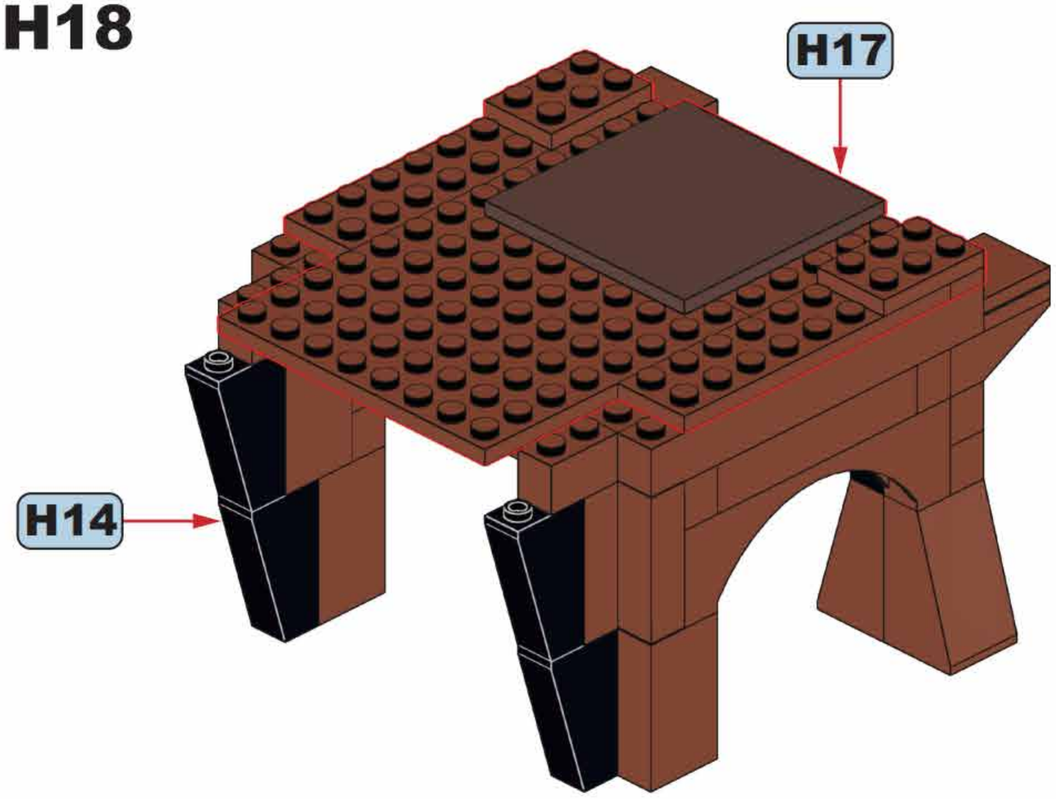

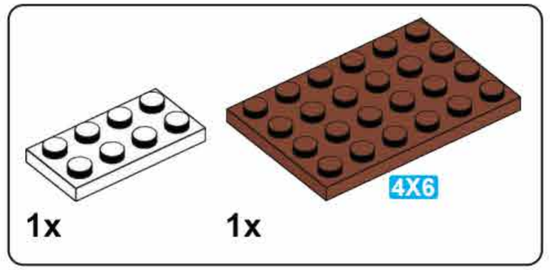

H19

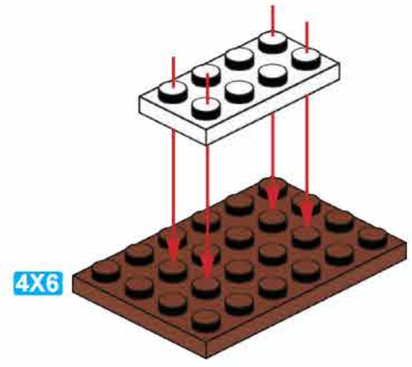

6x

H20

2x

H21

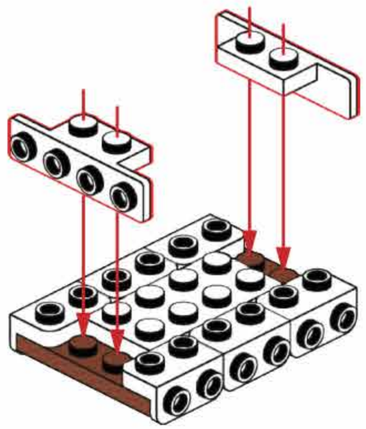

1x 1x 1x 1X3

H22

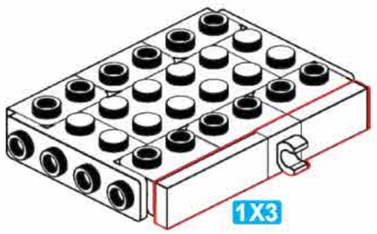

8x 2x 1X4

H23

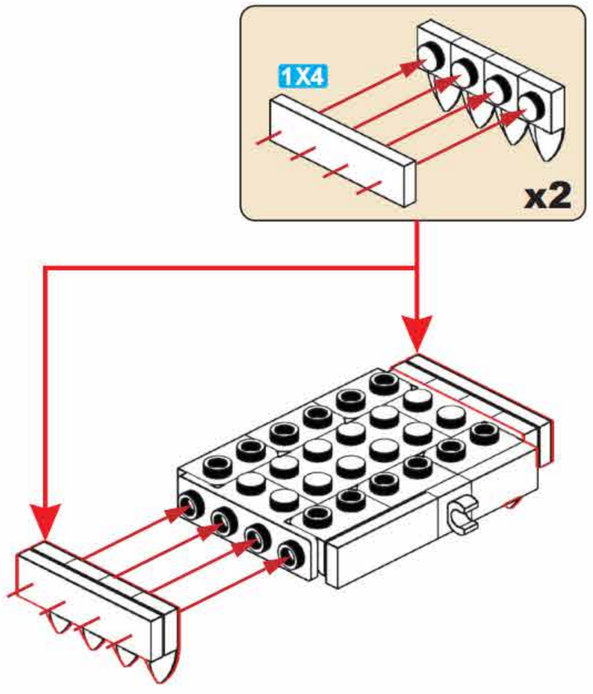

2x 6x 1x 1X4

H24

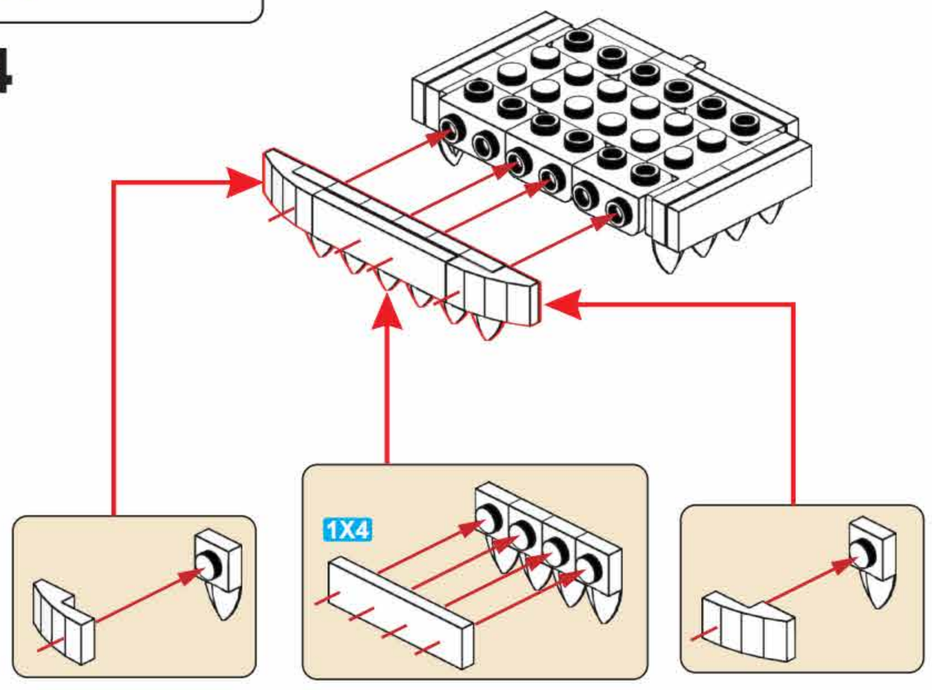

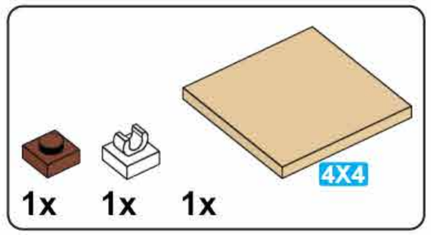

H25

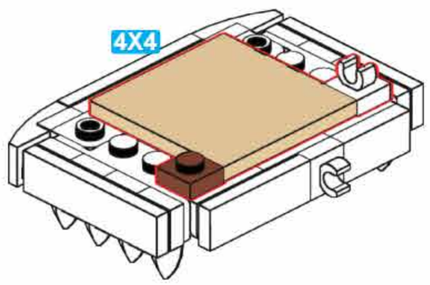

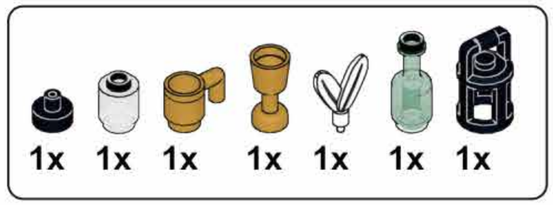

H26

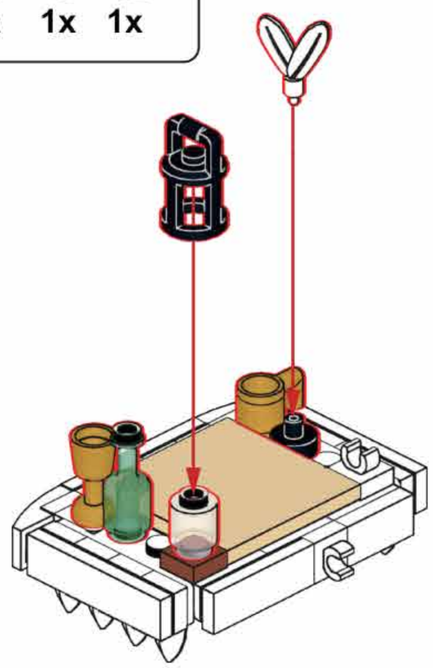

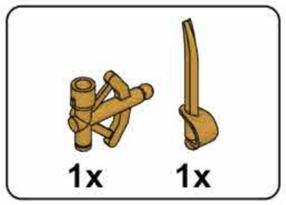

H27

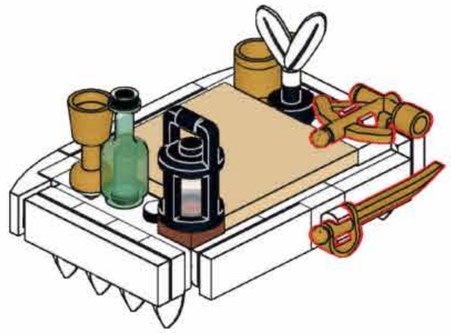

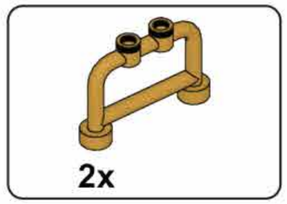

H28

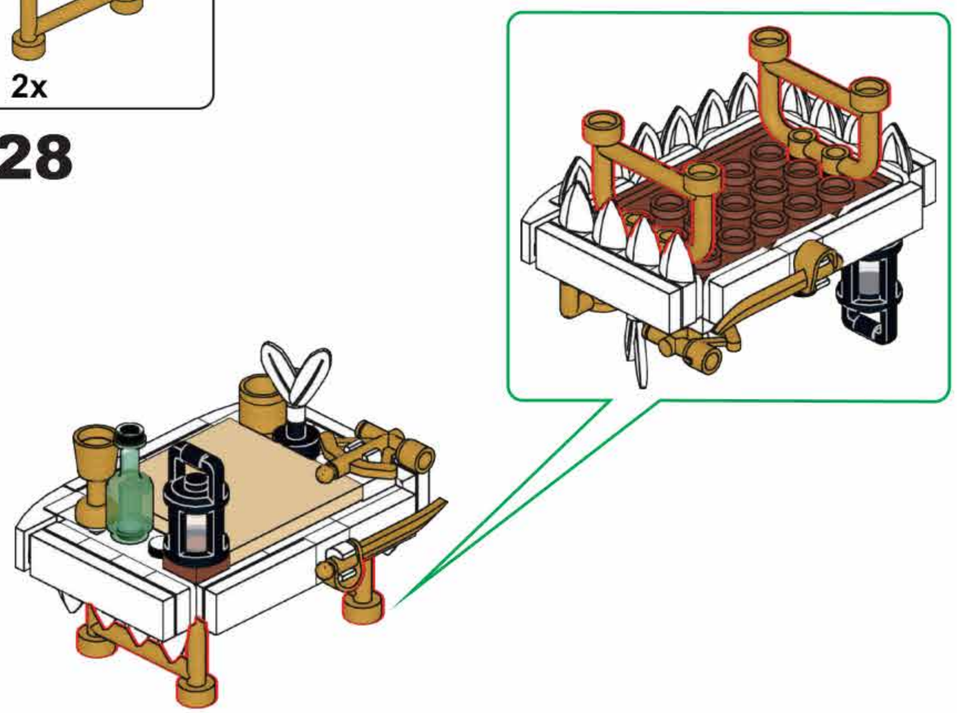

H29

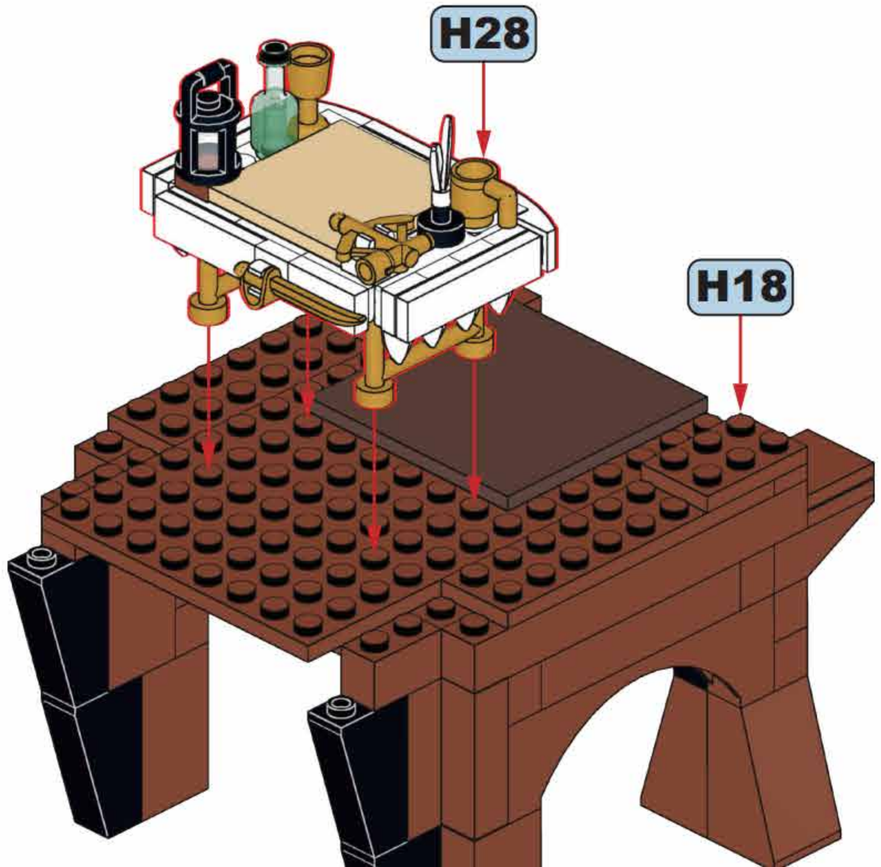

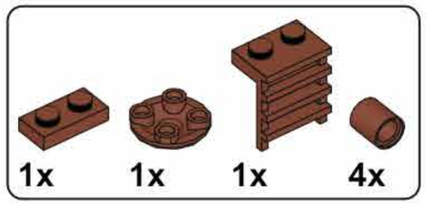

H30

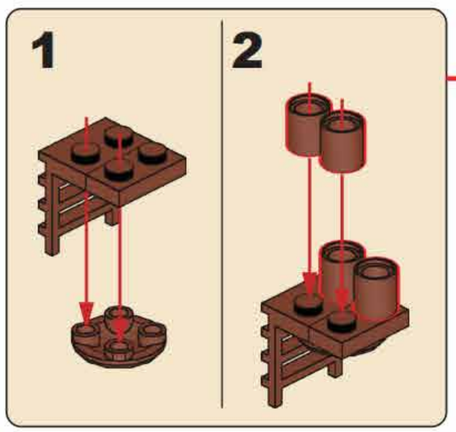

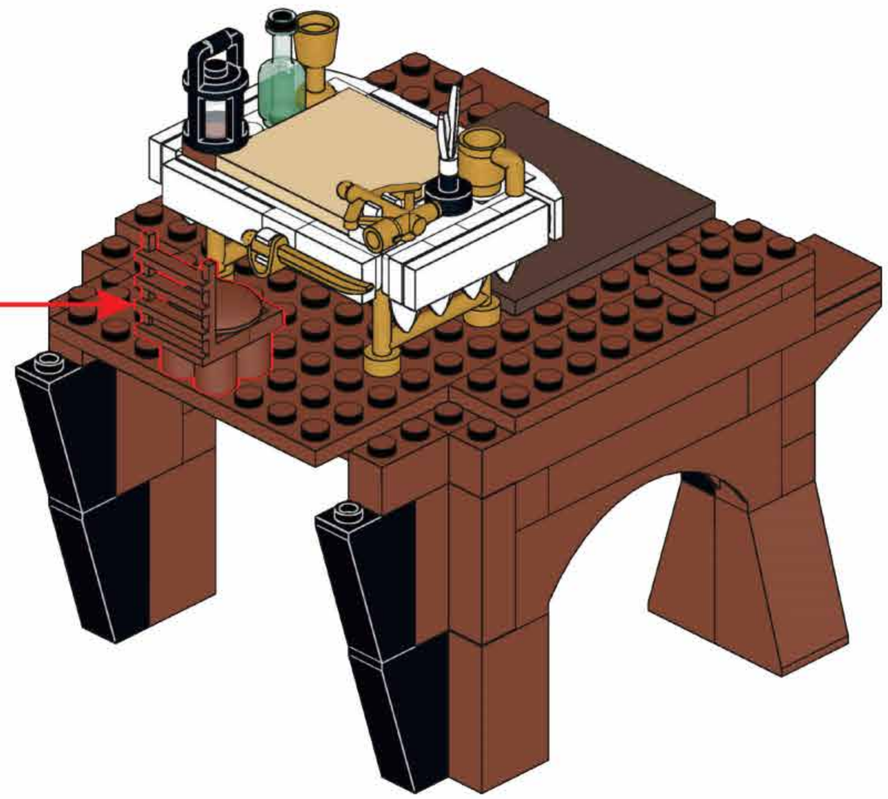

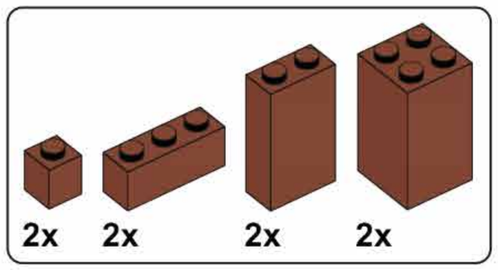

H31

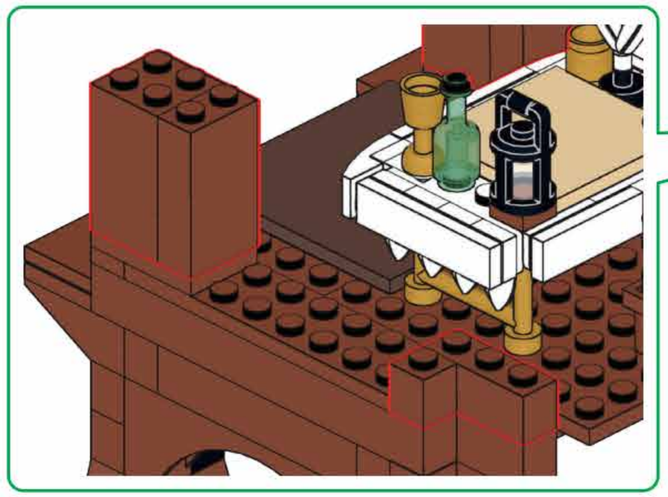

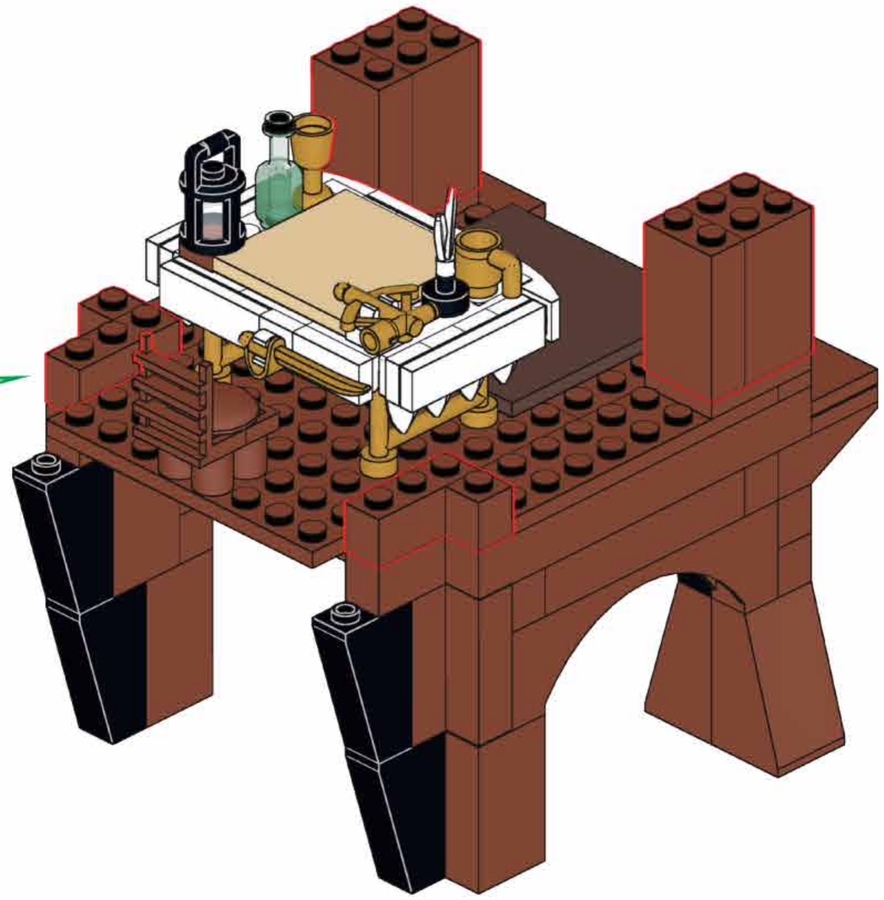

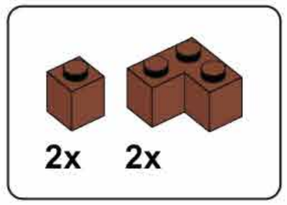

H32

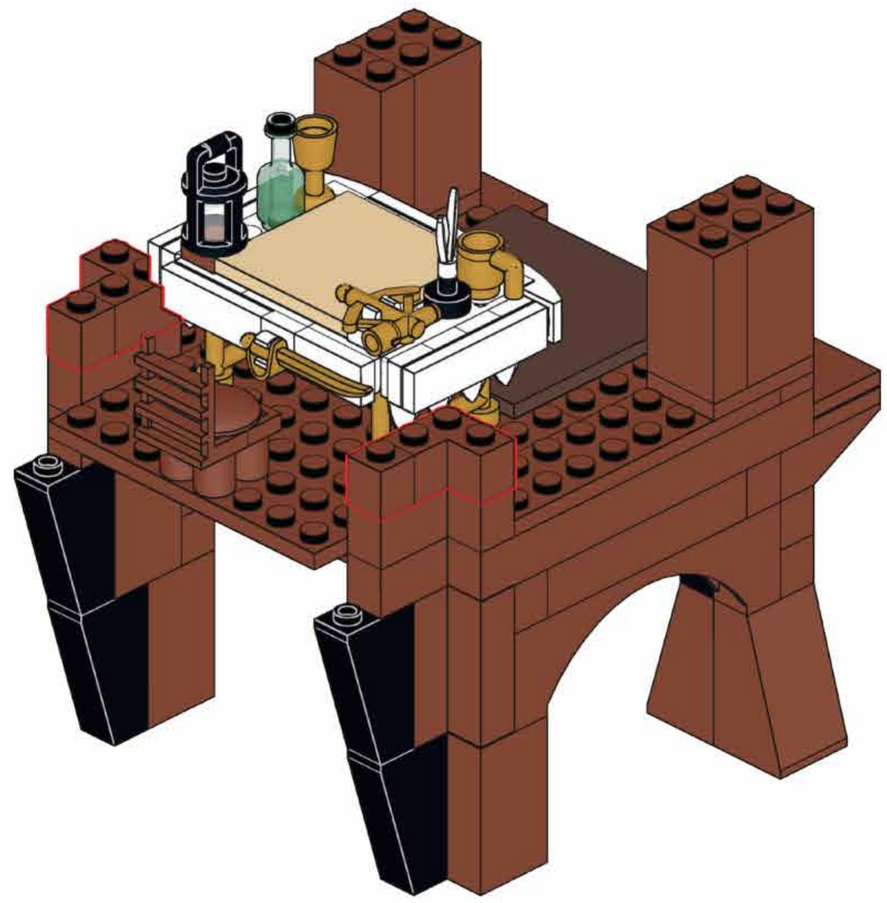

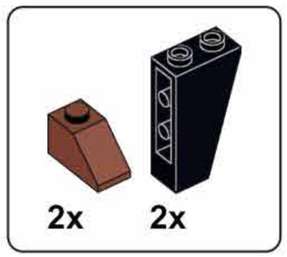

H33

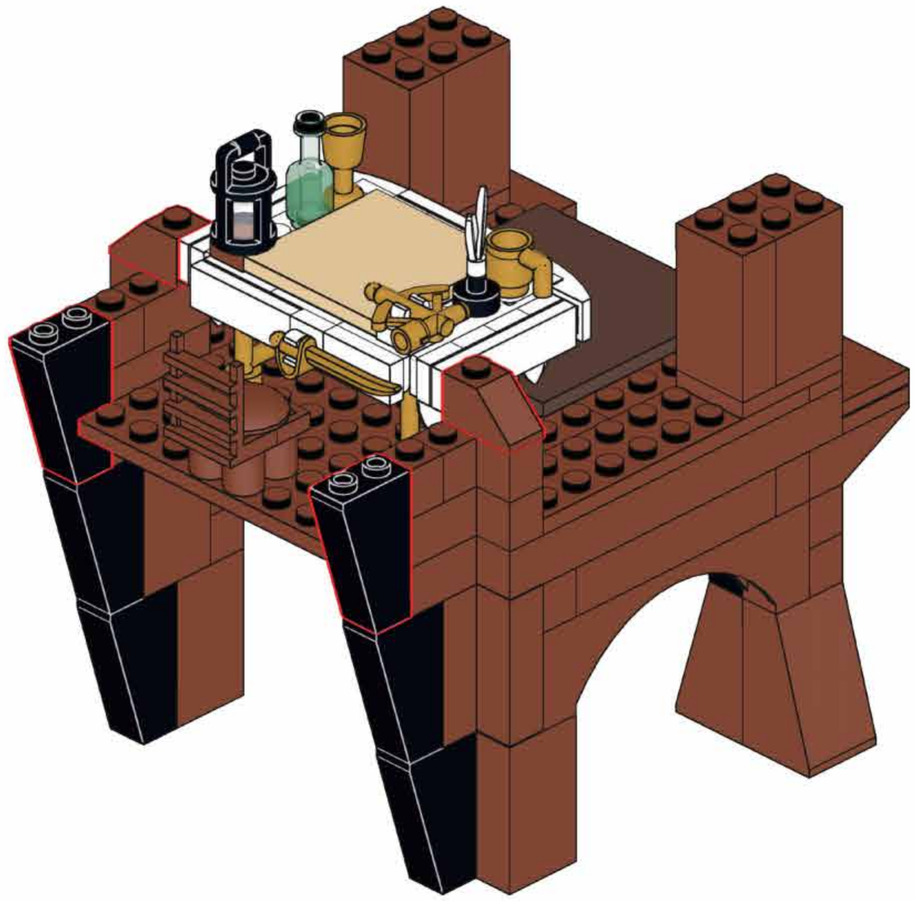

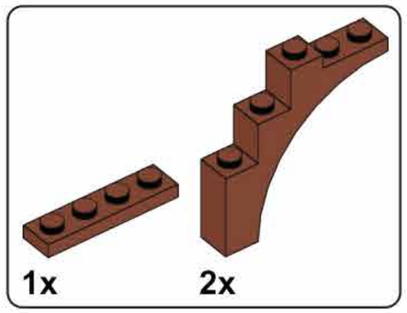

H34

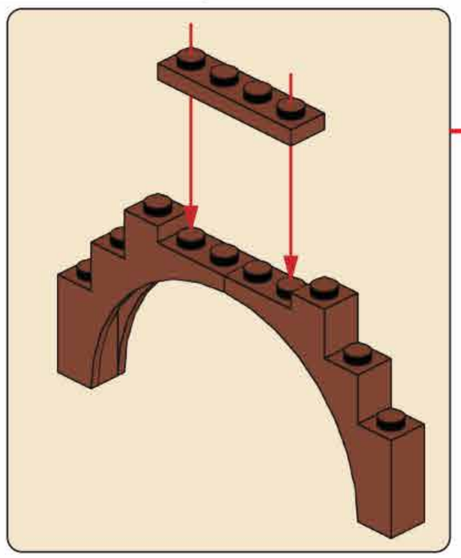

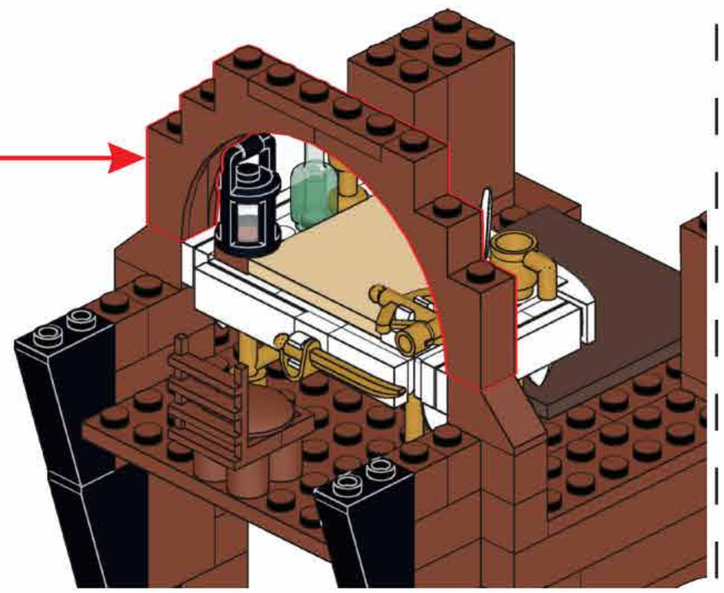

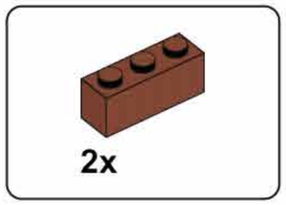

H35

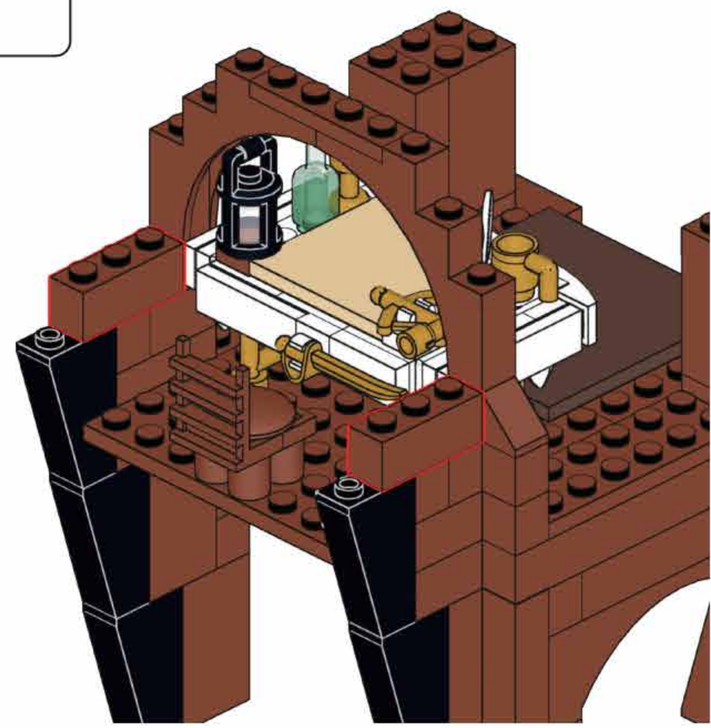

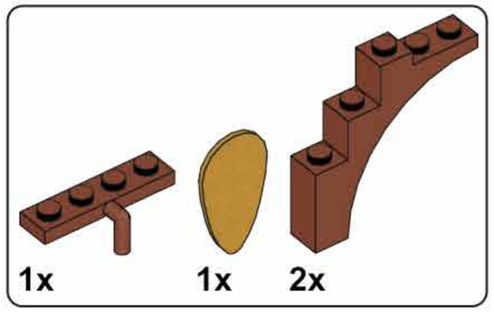

H36

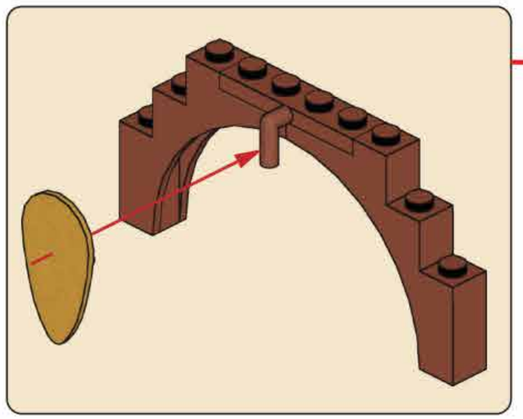

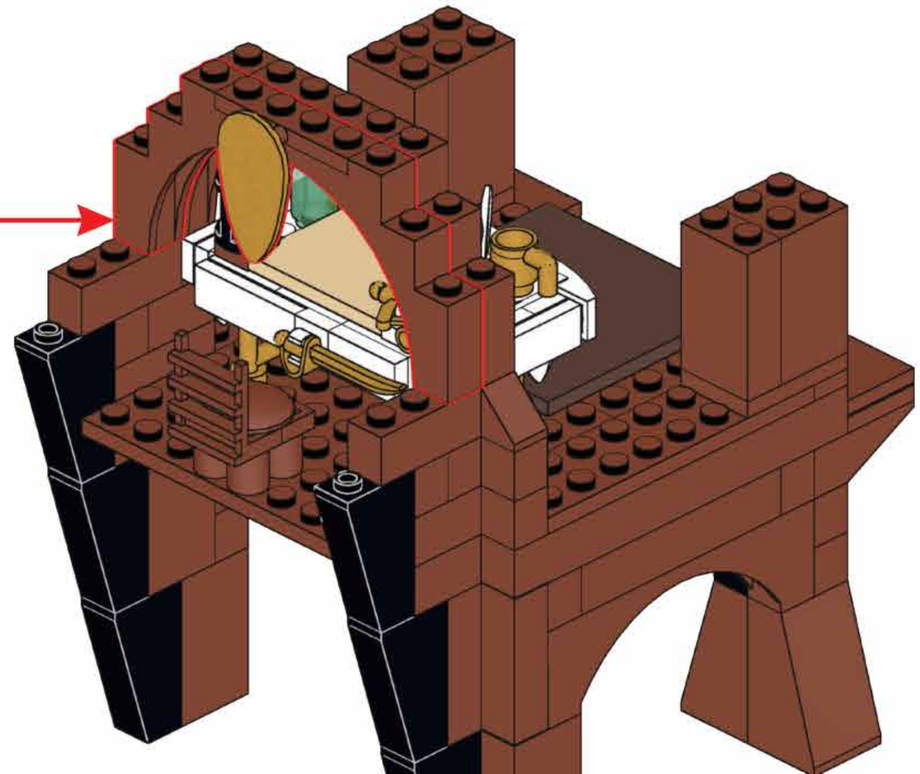

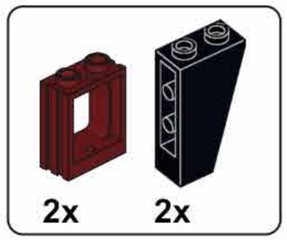

H37

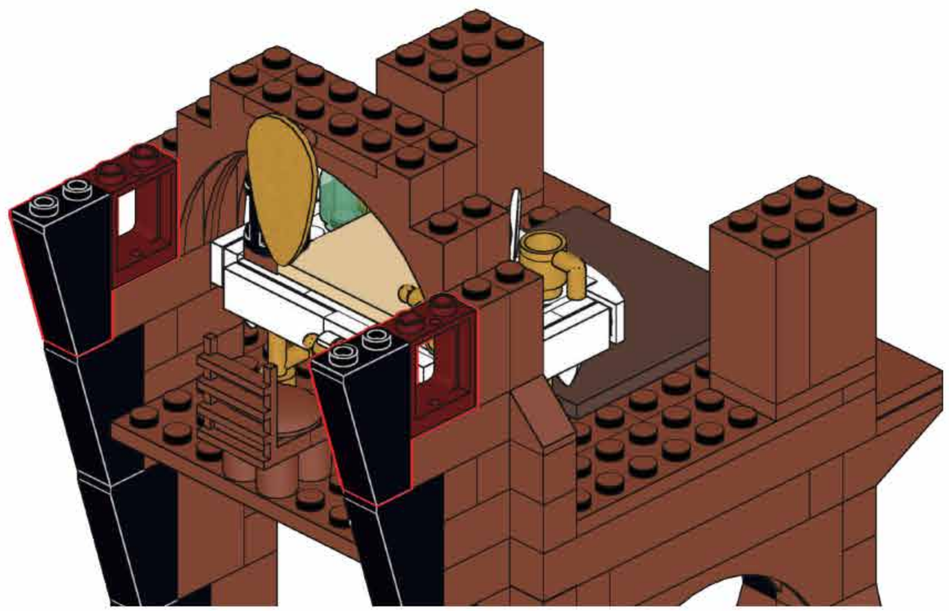

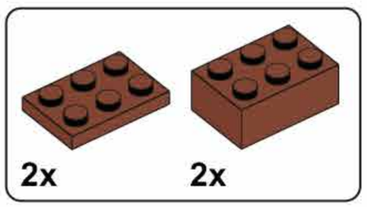

H38

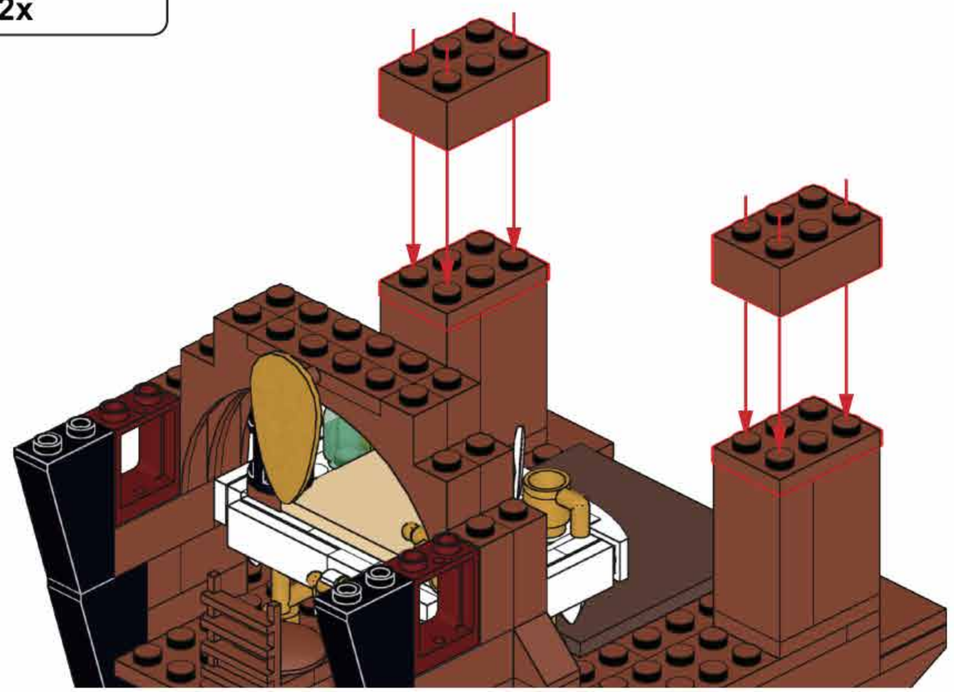

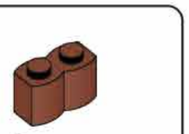

H39

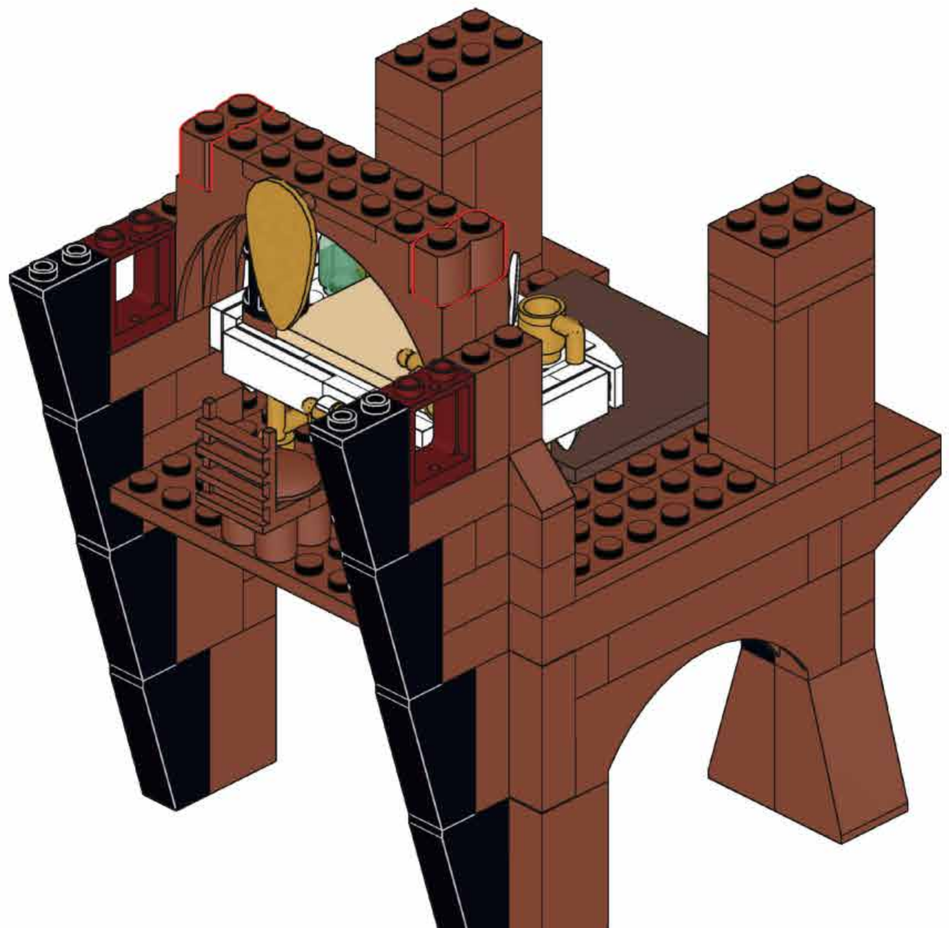

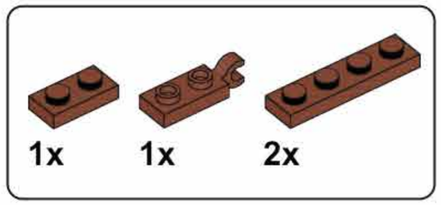

H40

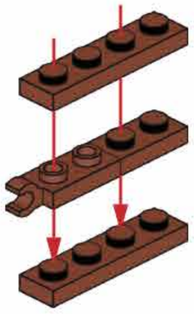

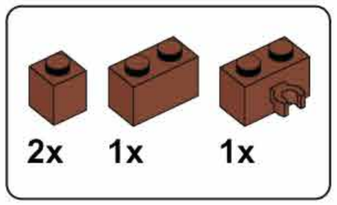

H41

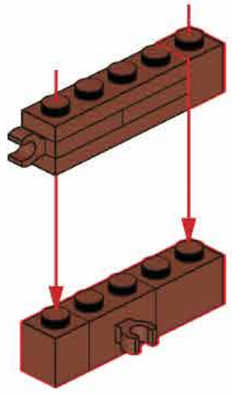

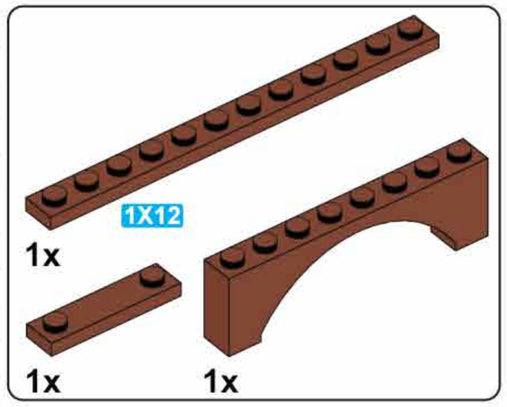

H42

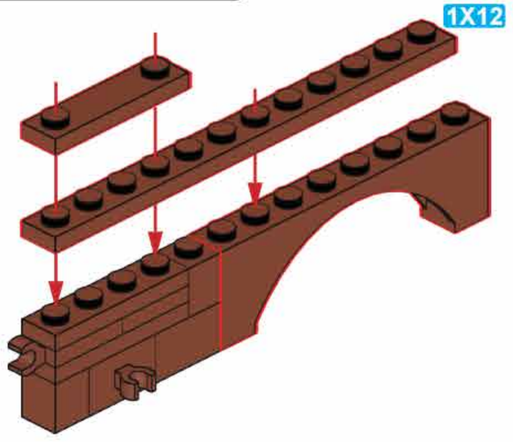

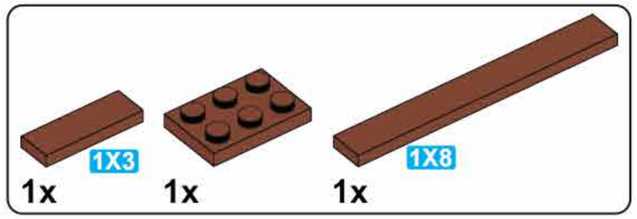

H43

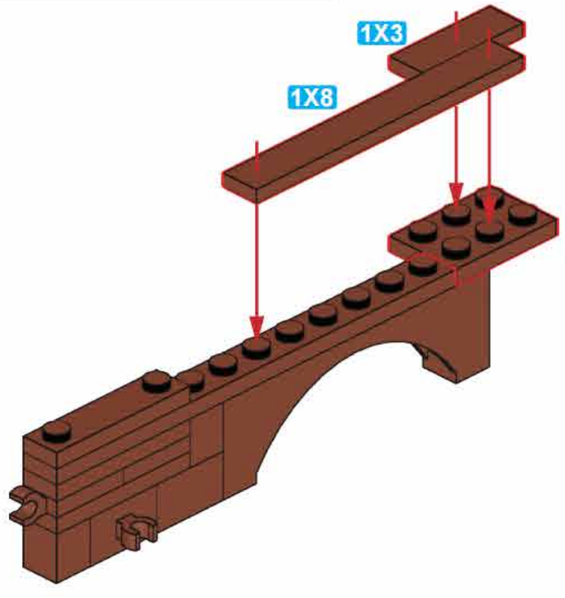

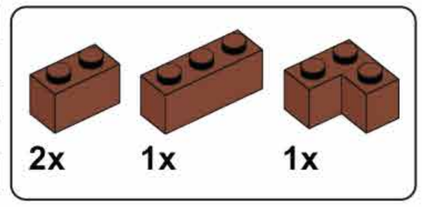

H44

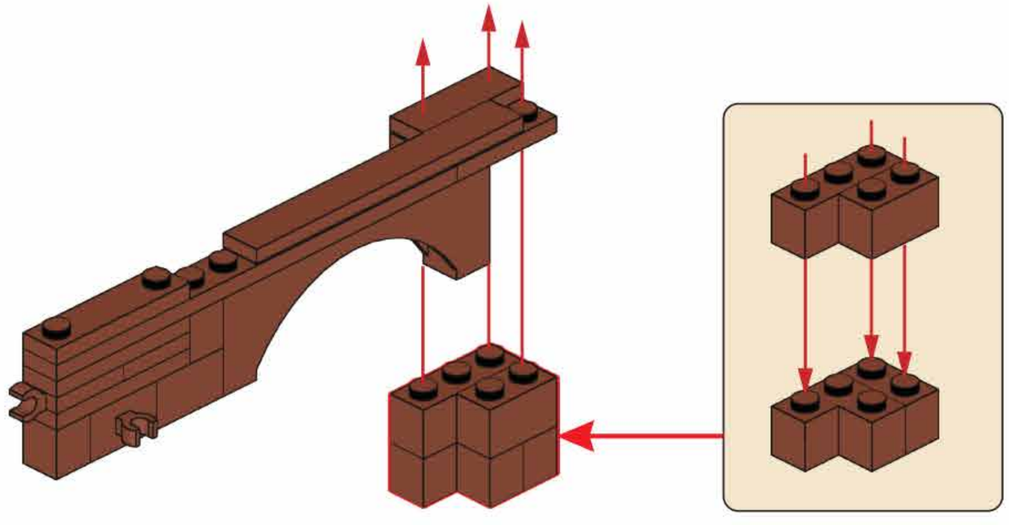

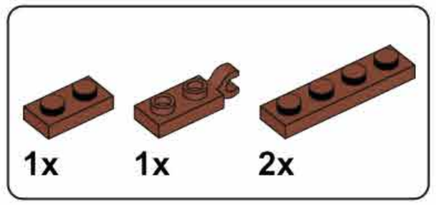

H45

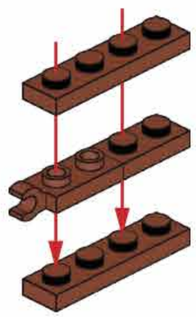

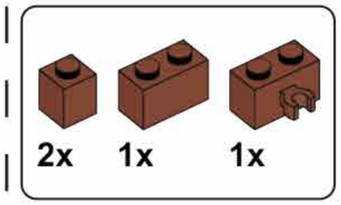

H46

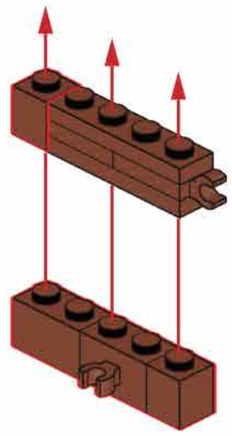

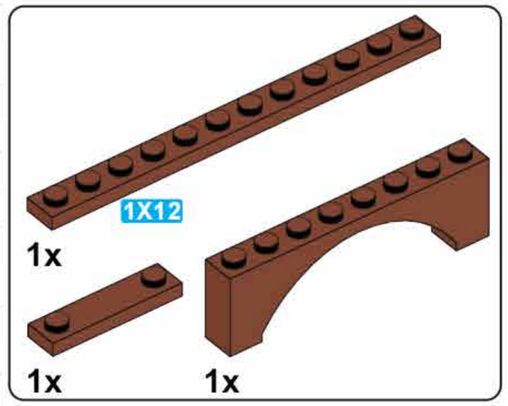

H47

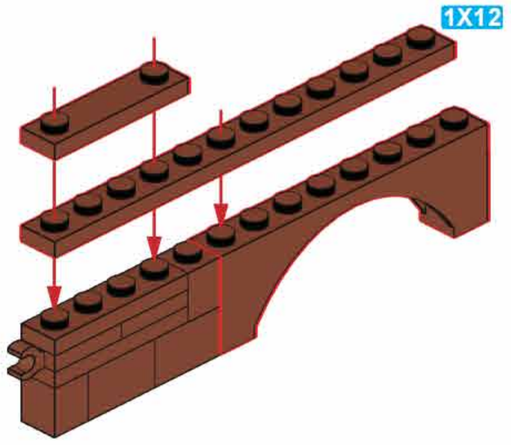

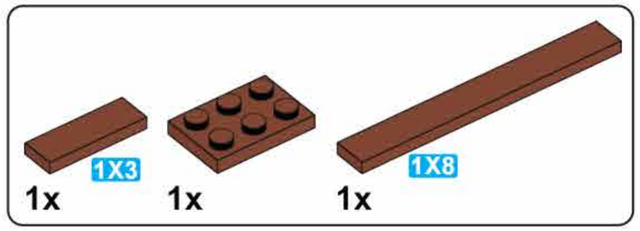

H48

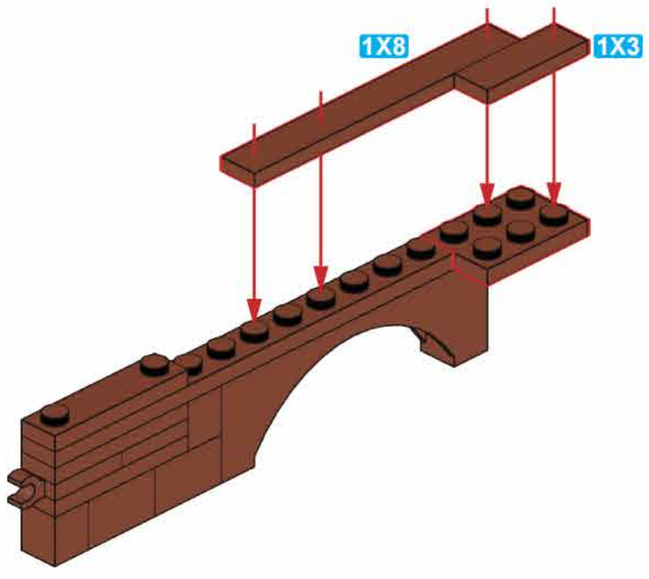

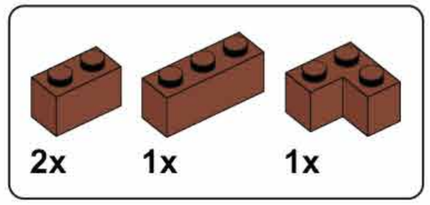

H49

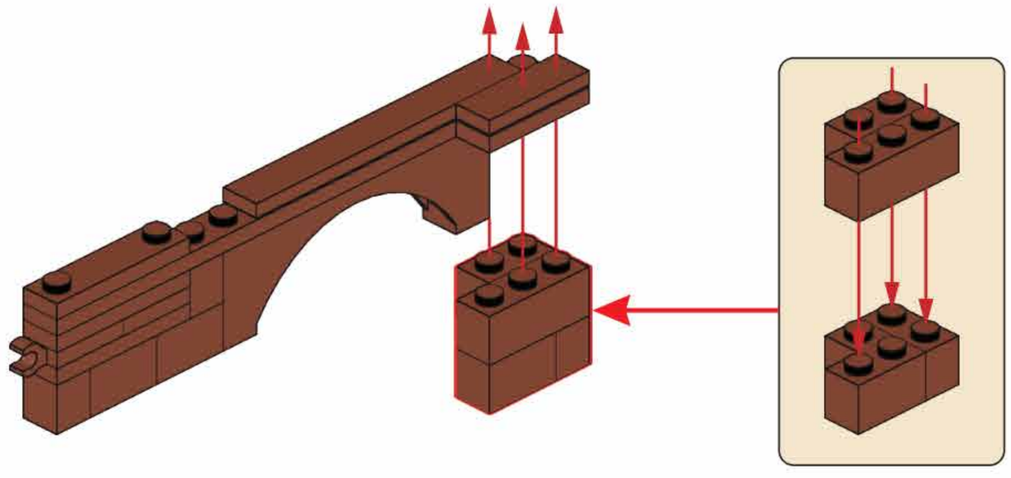

H50

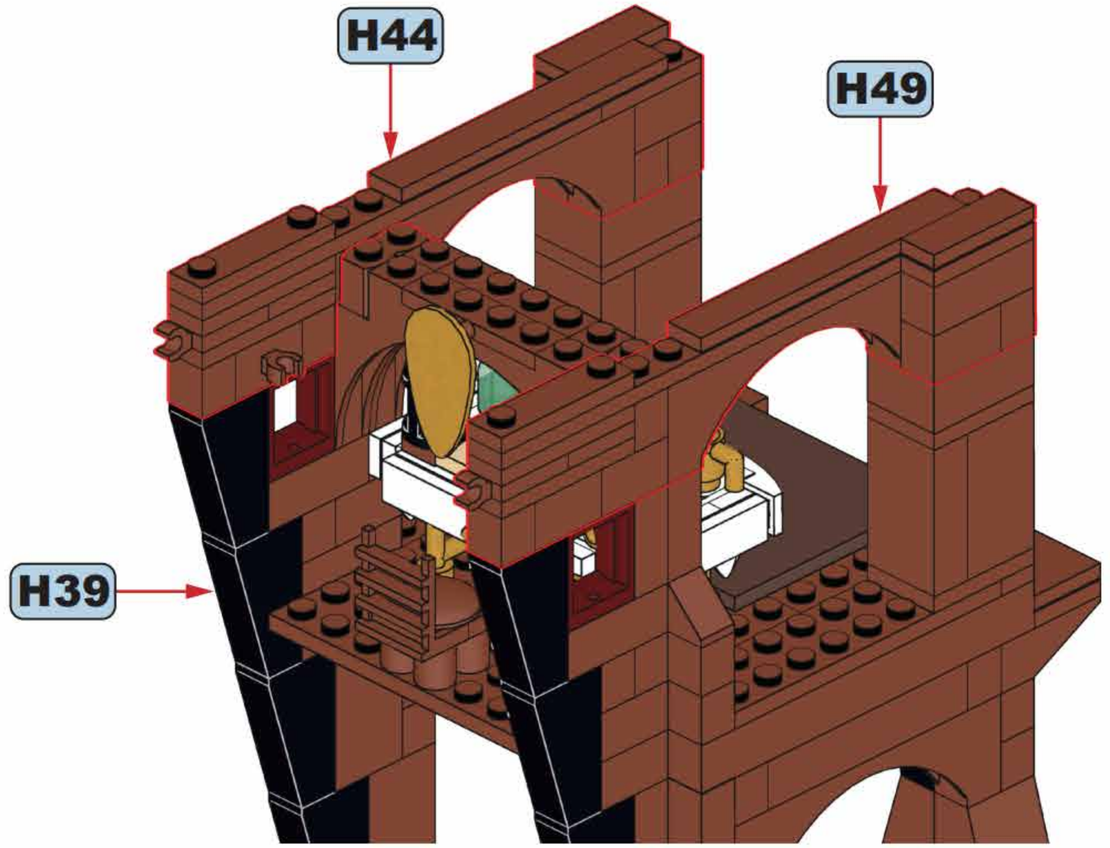

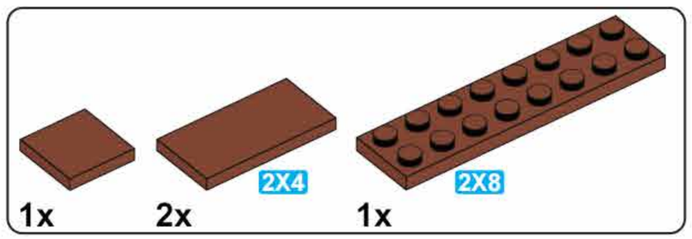

H51

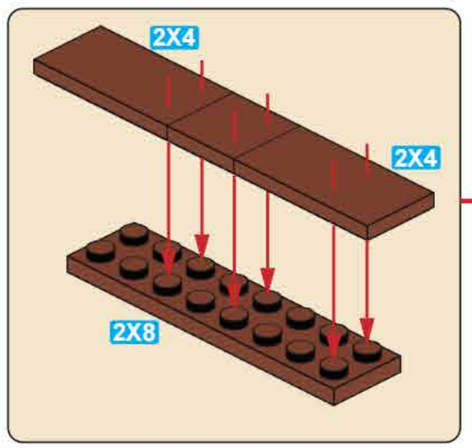

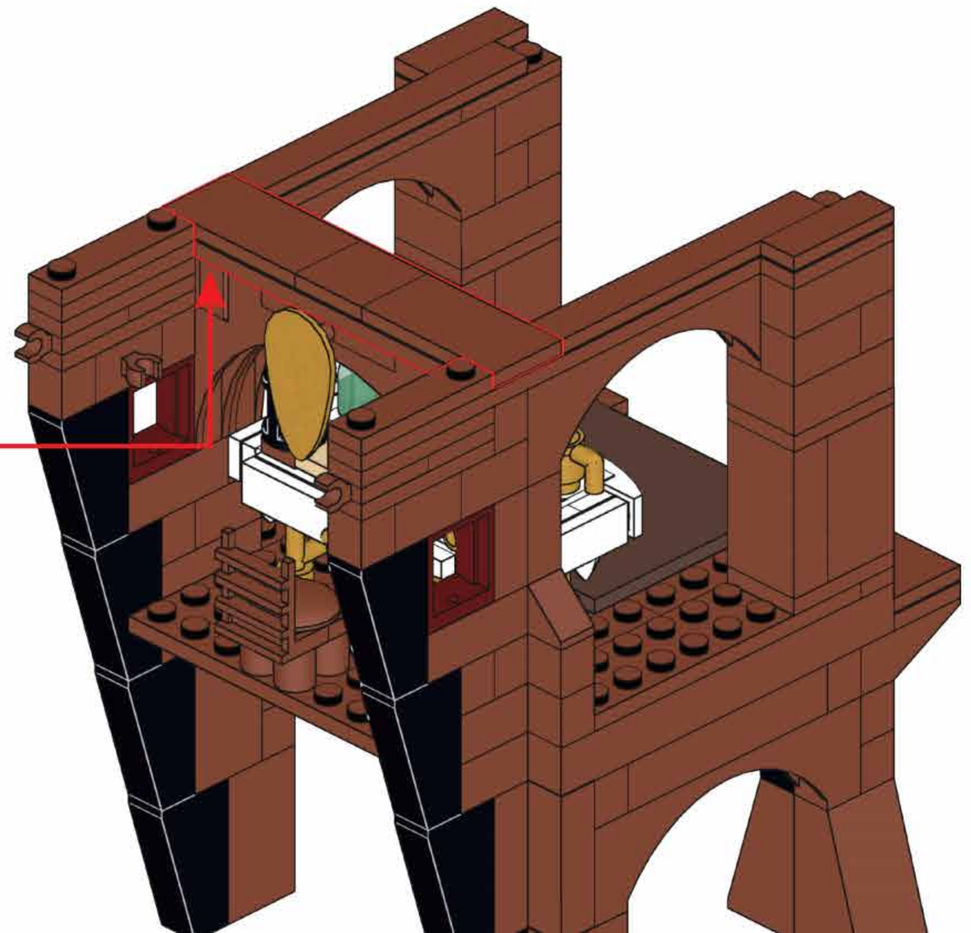

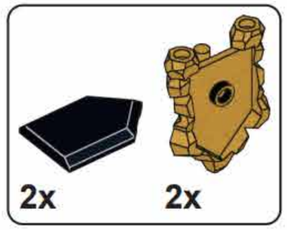

H52

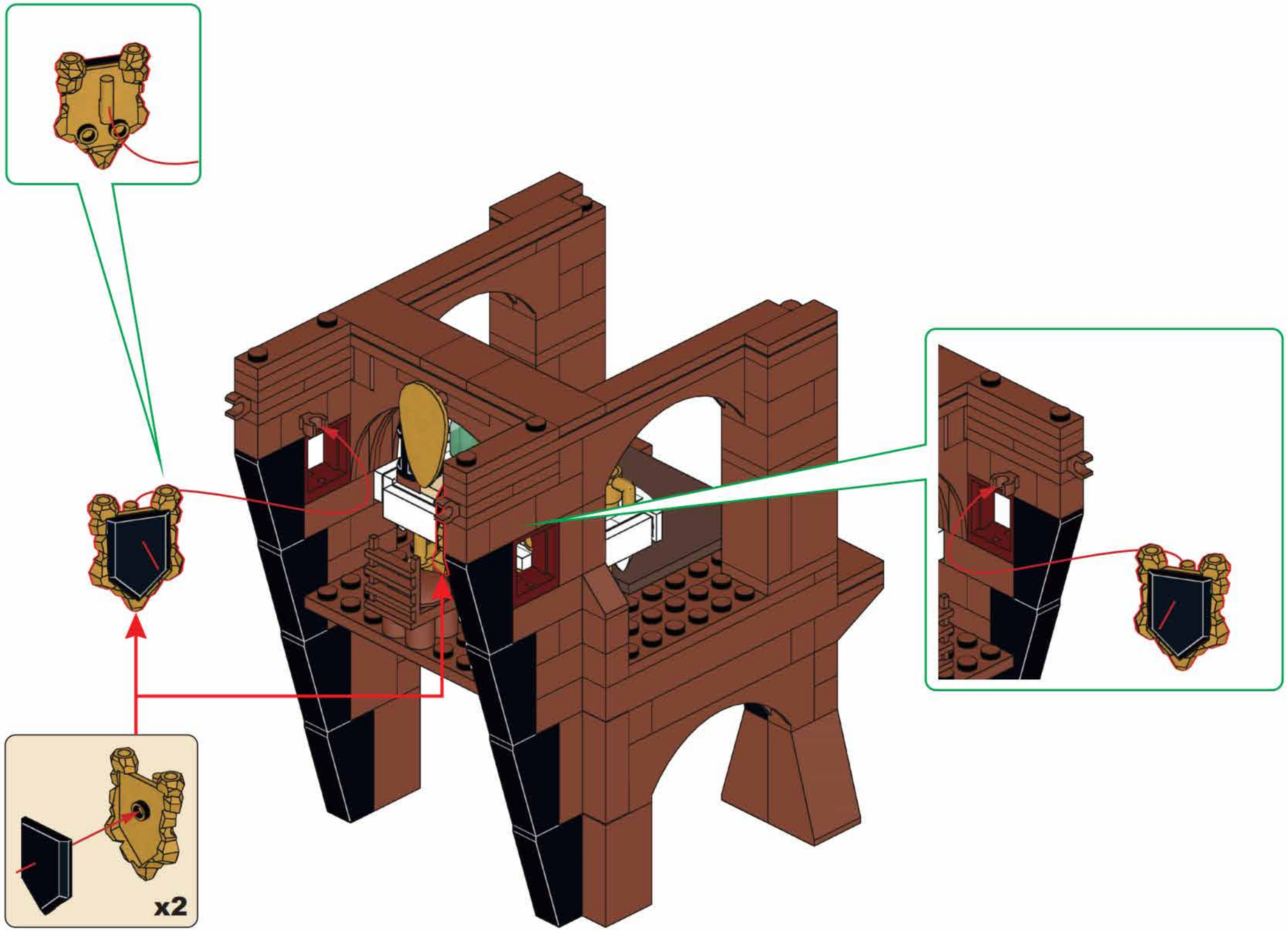

H53

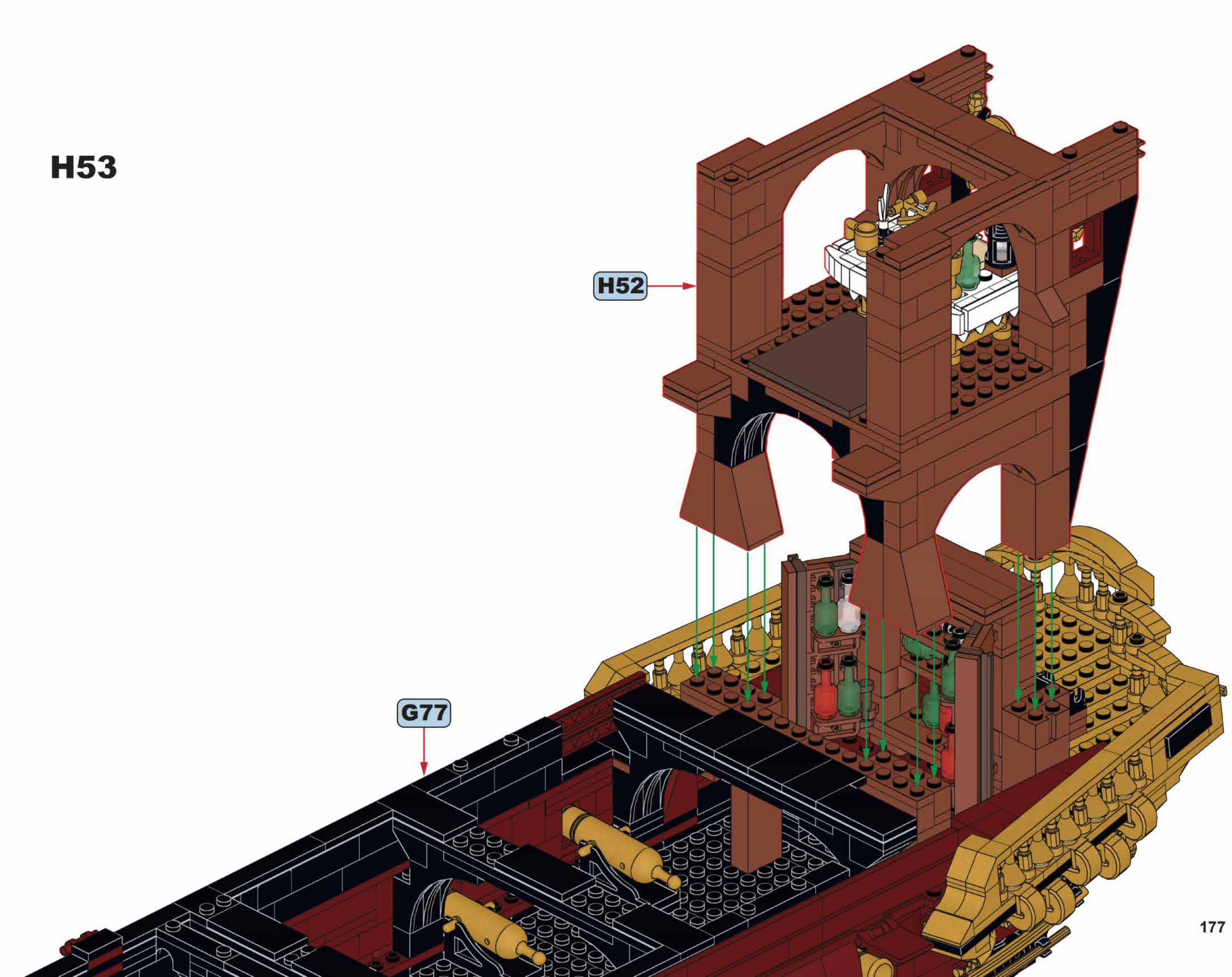

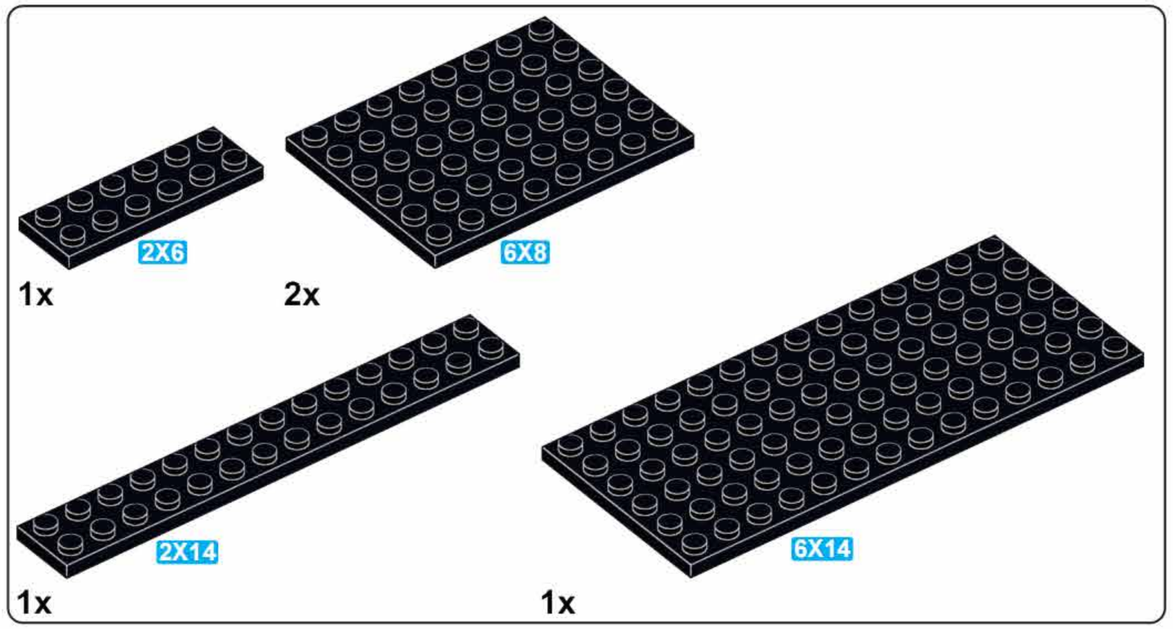
2X6
6X8
1x
2x
2X14
6X14
1x
1x

H54

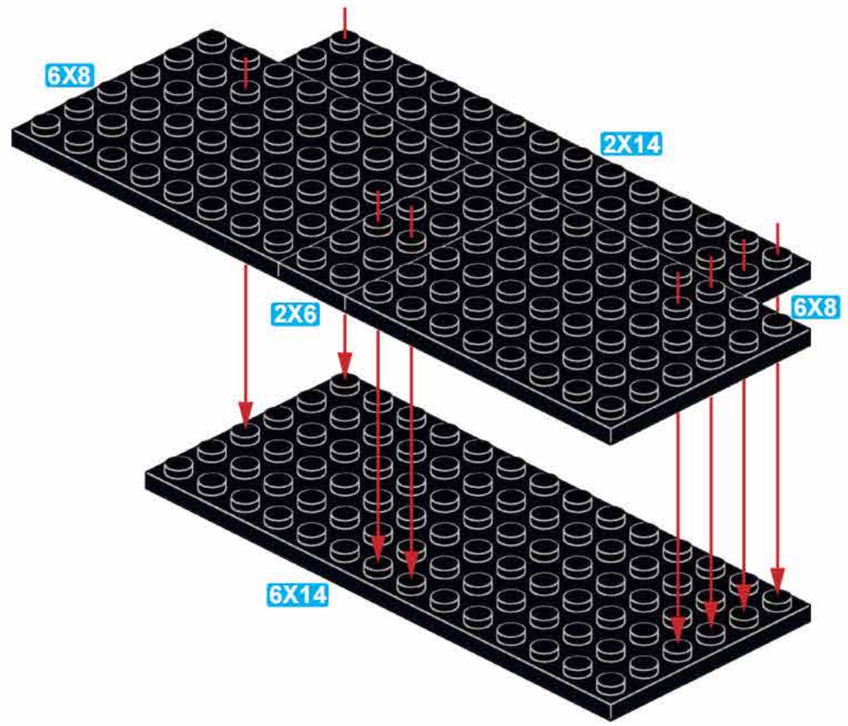
6X8
2X14
2X6
6X8
6X14

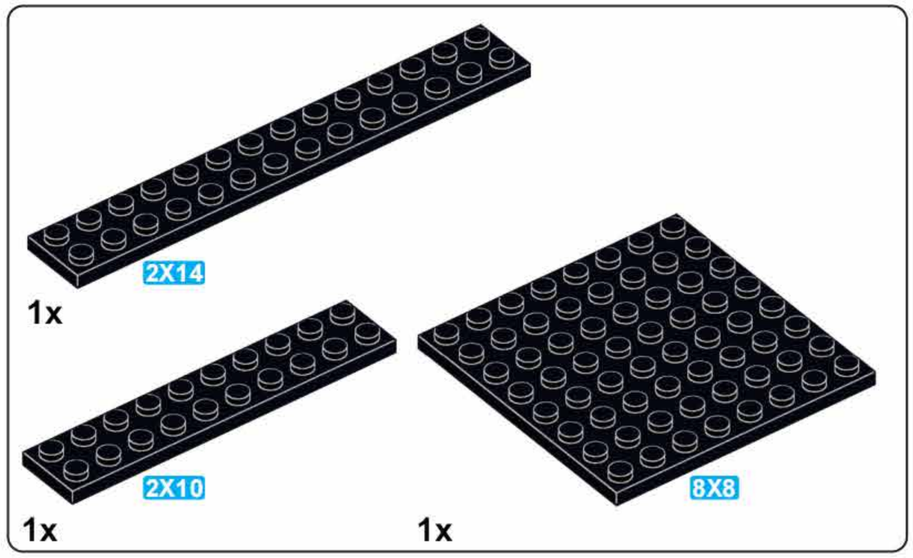
2X14
1x
2X10
8X8
1x
1x

H55

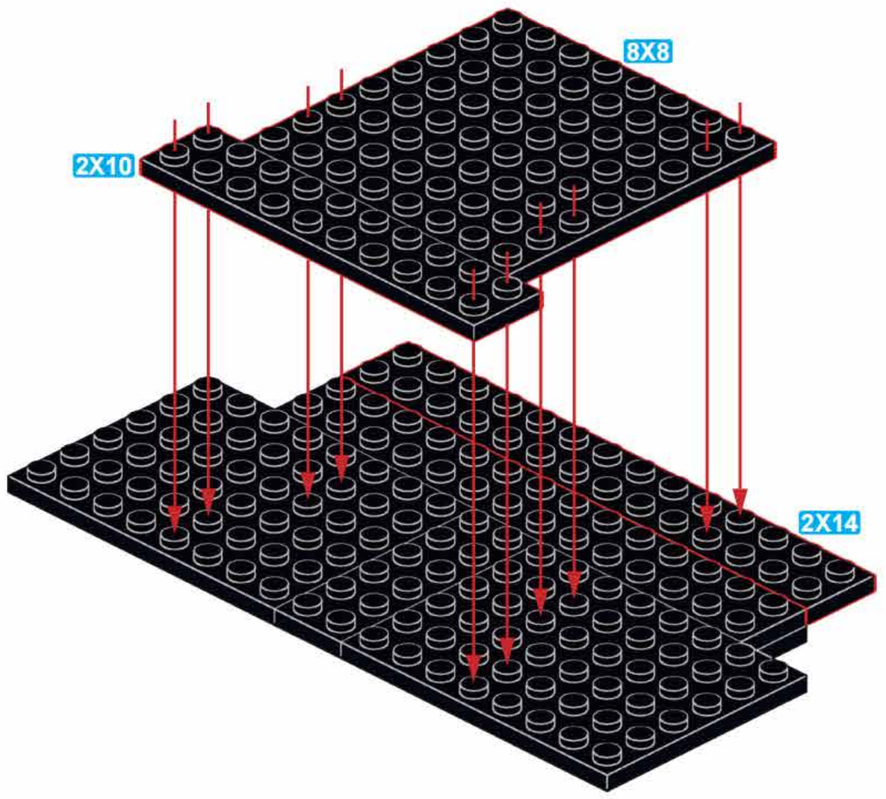
8X8
2X10
2X14

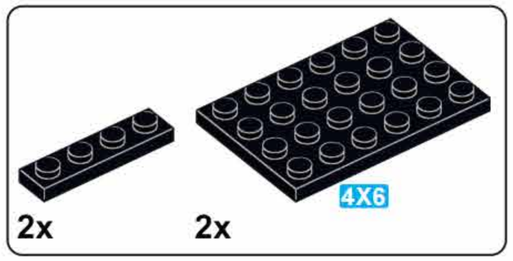

H56

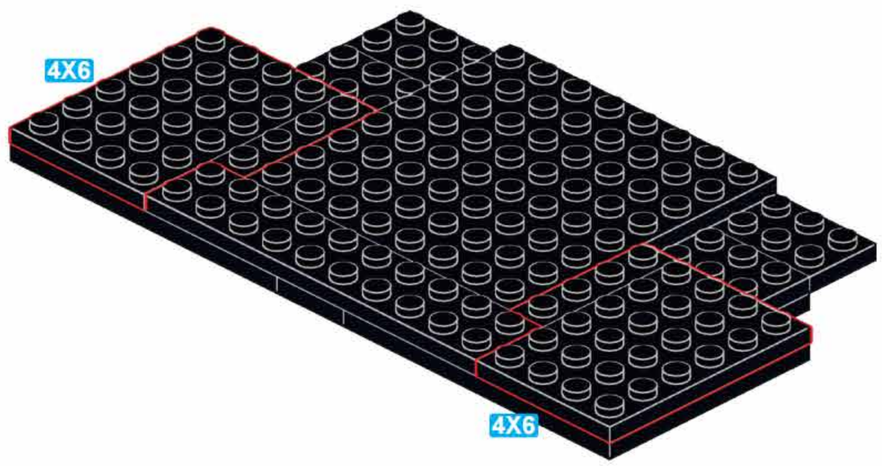

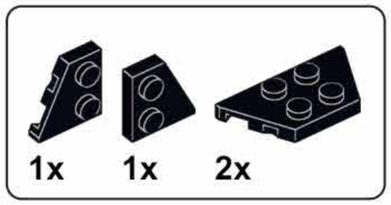

H57

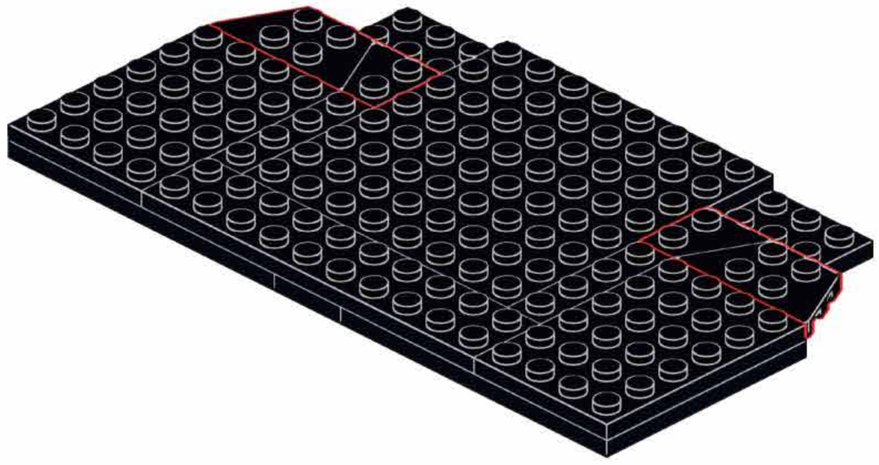

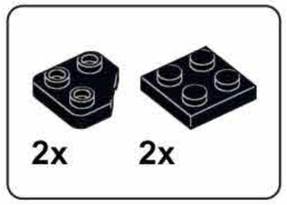

H58

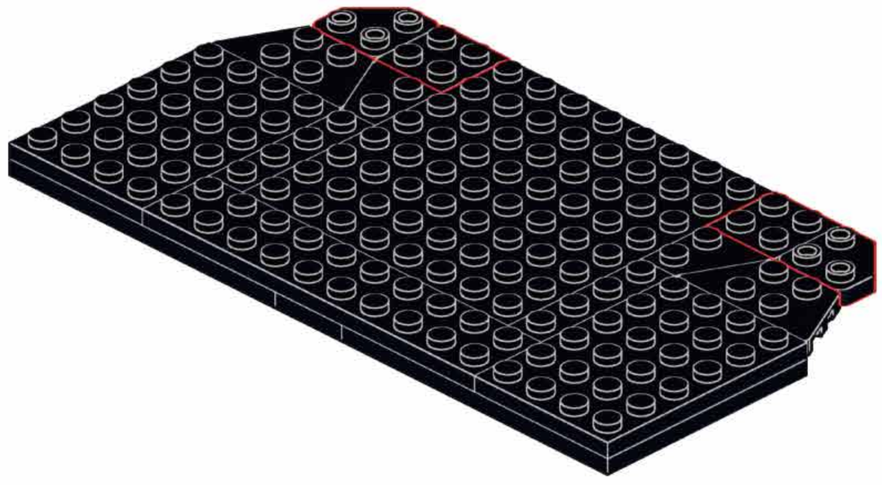

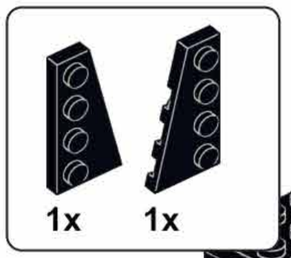

H59

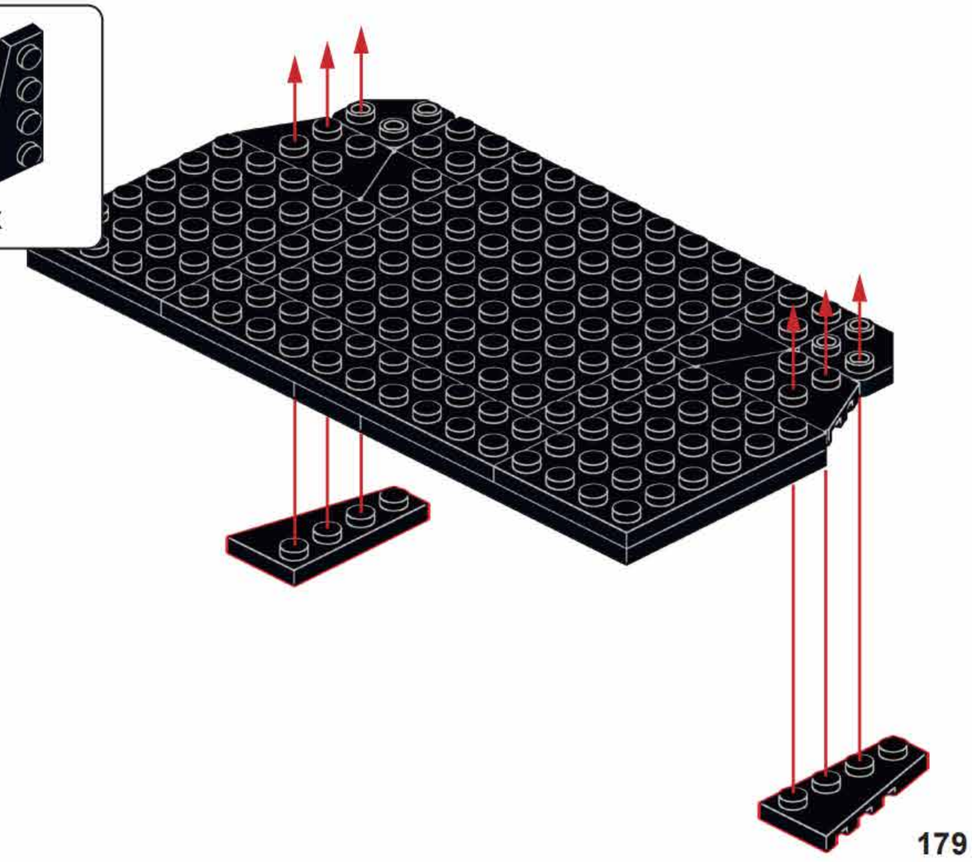

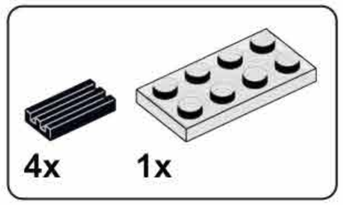

H60

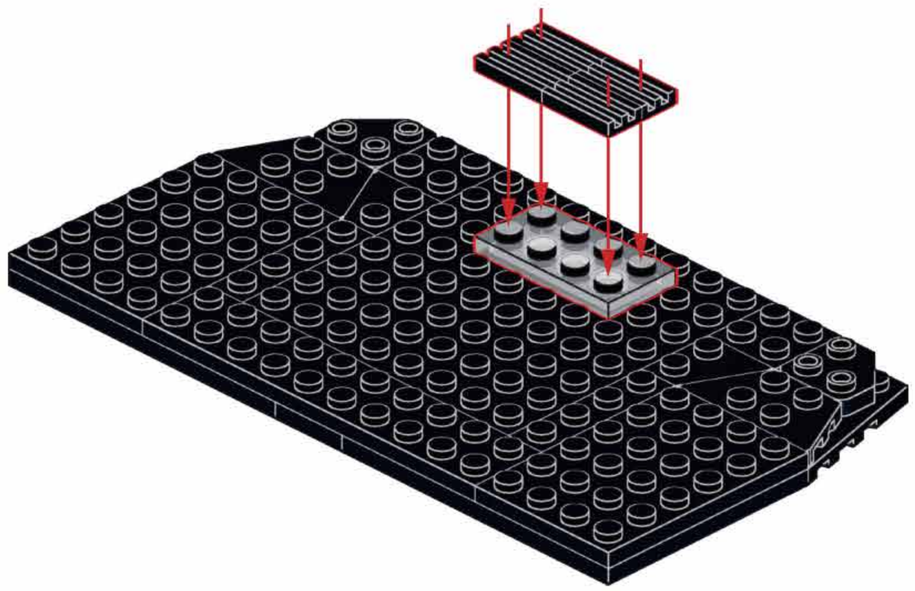

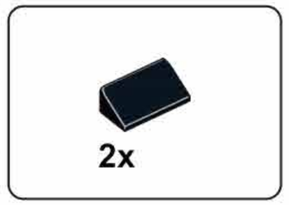

H61

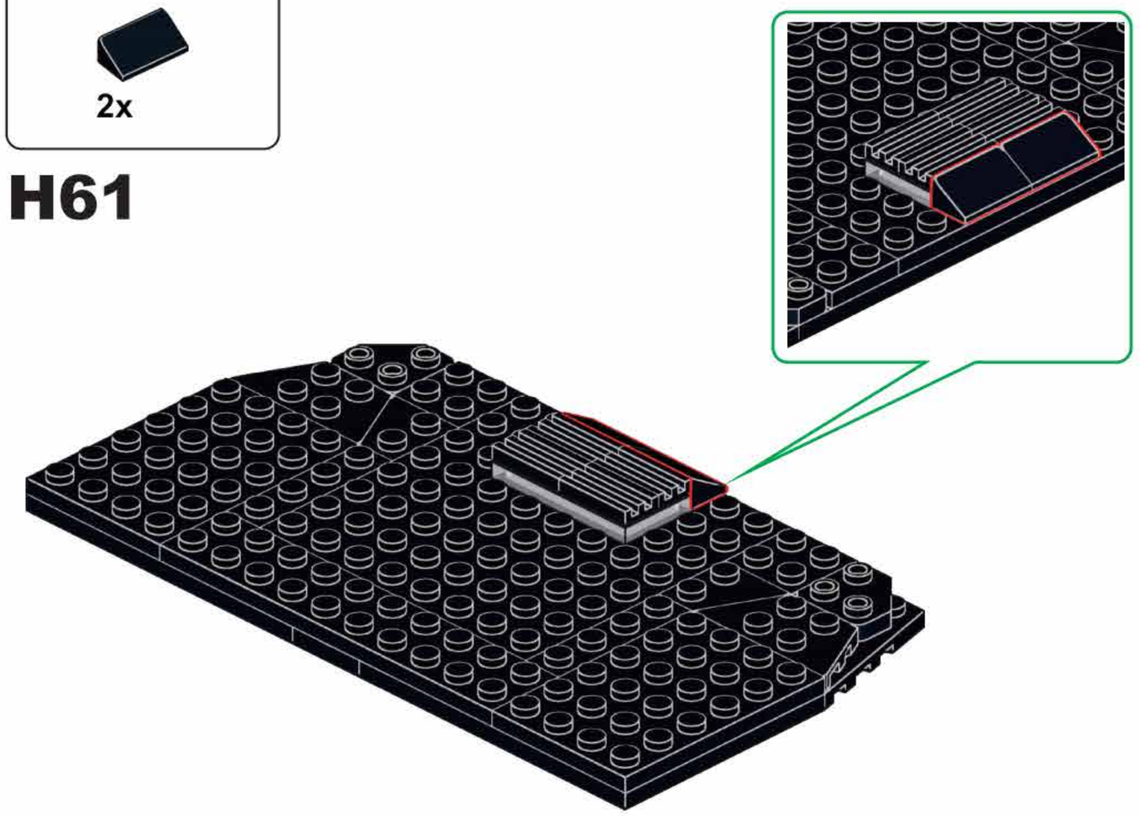

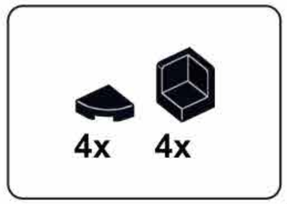

H62

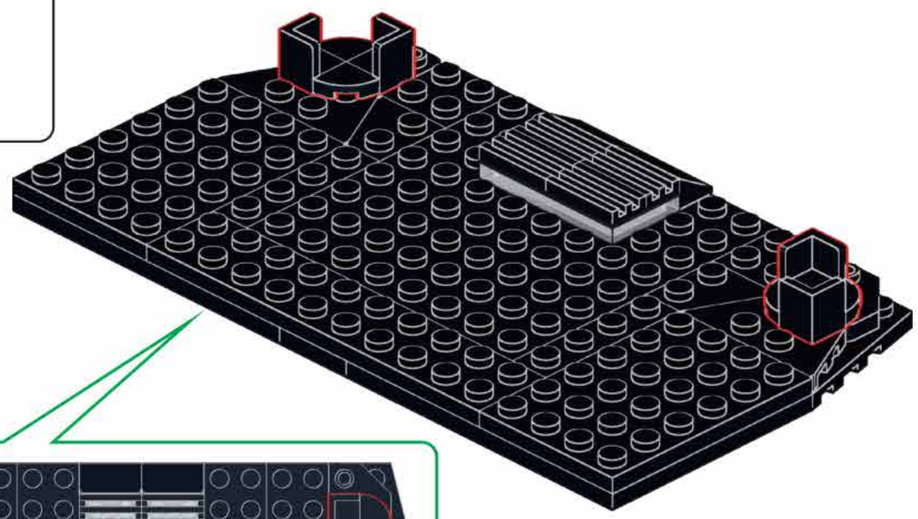

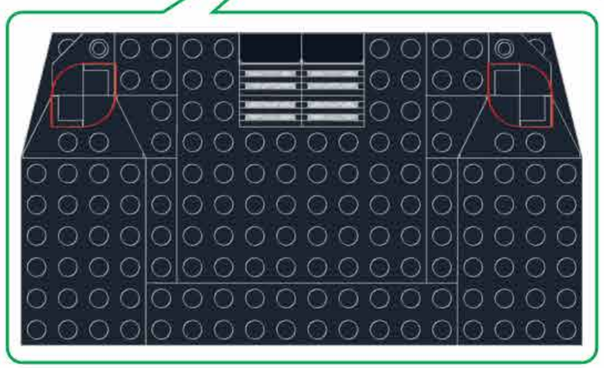

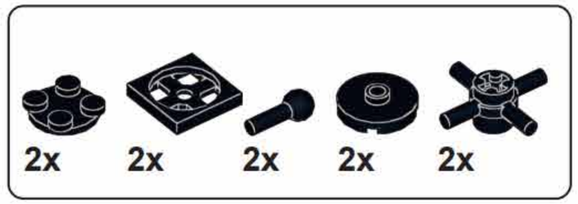

H63

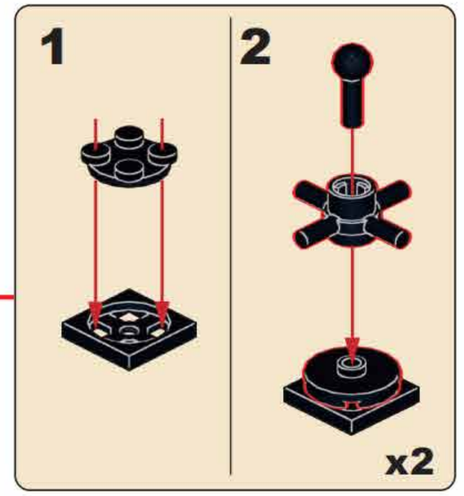

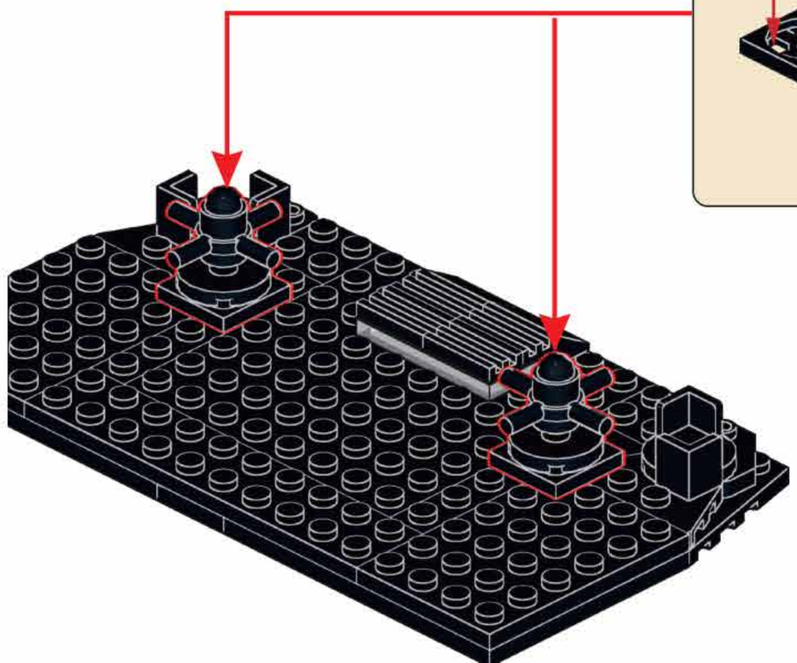

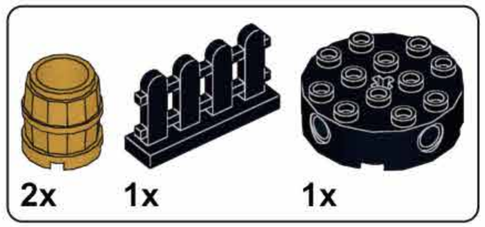

H64

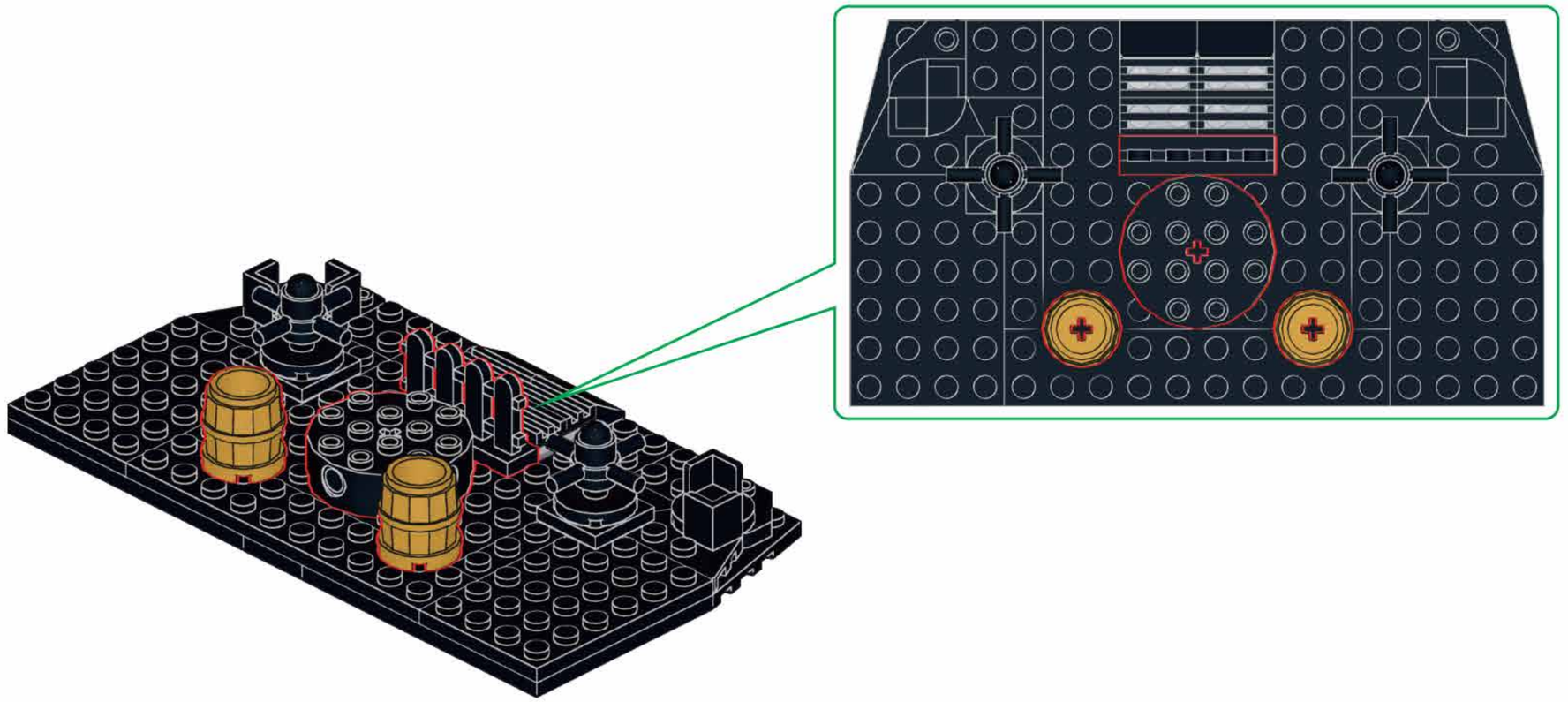

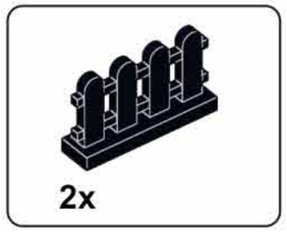

H65

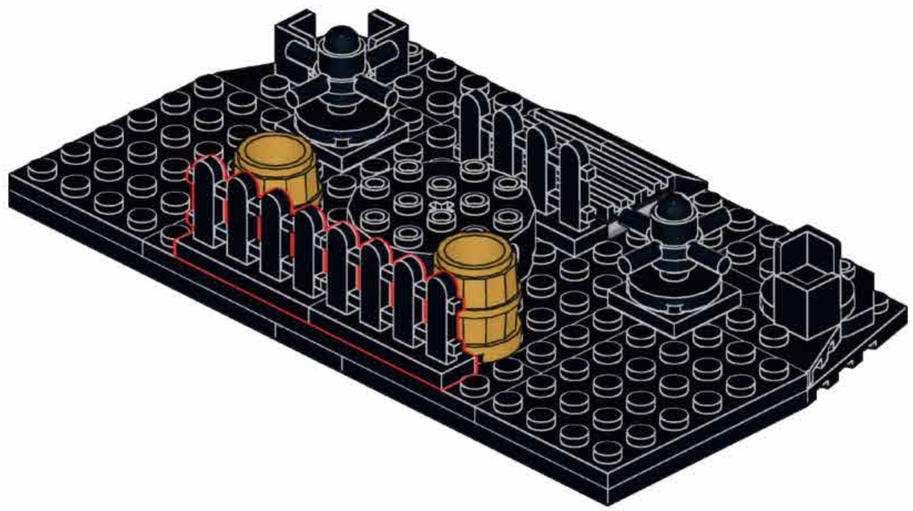

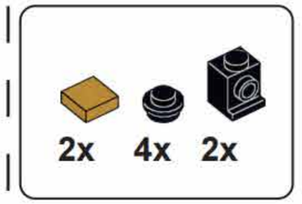

H66

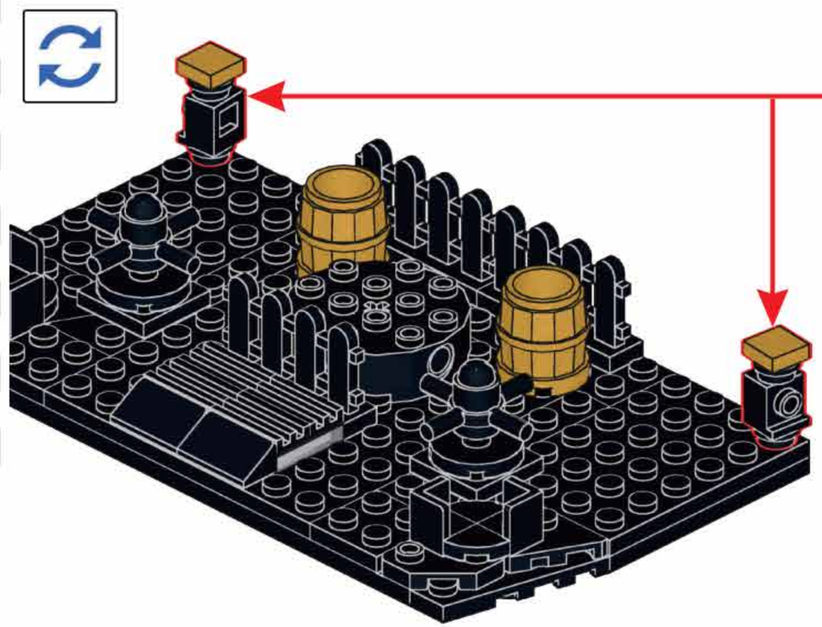

2x 2x 2x 2x

H67

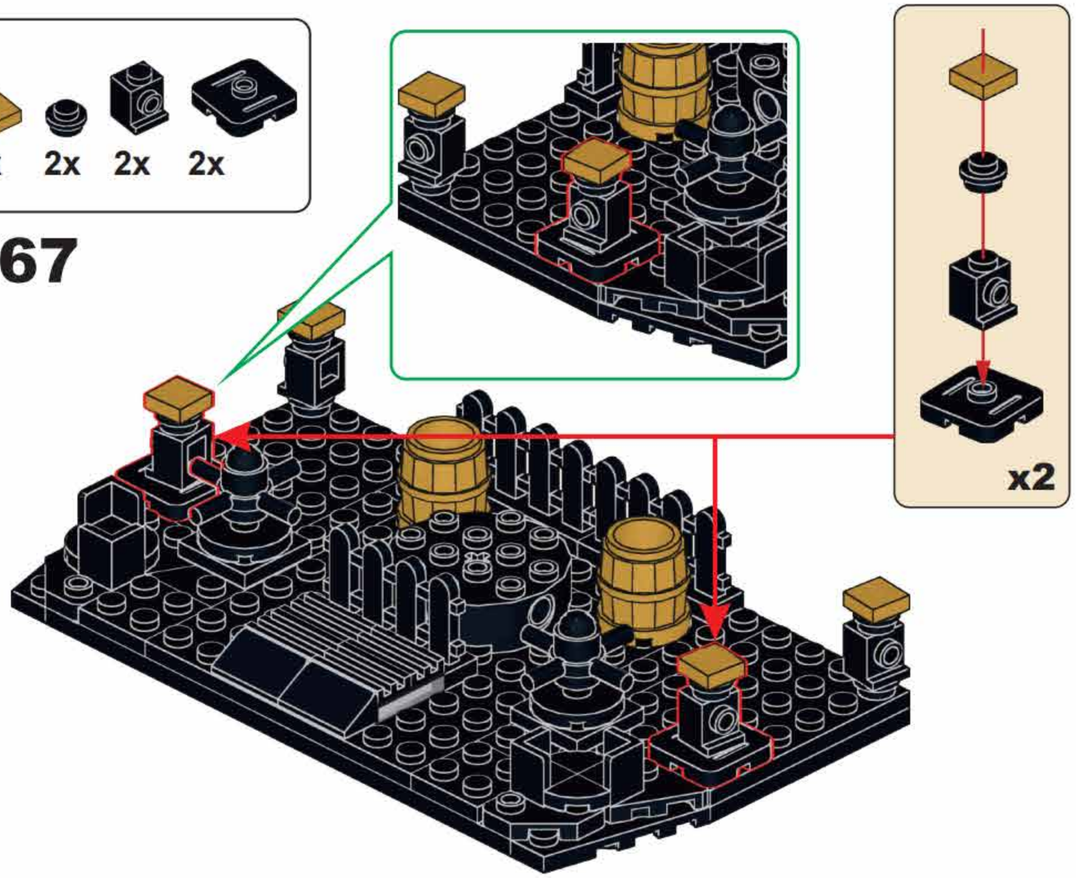

x2

4x 8x 4x

H68

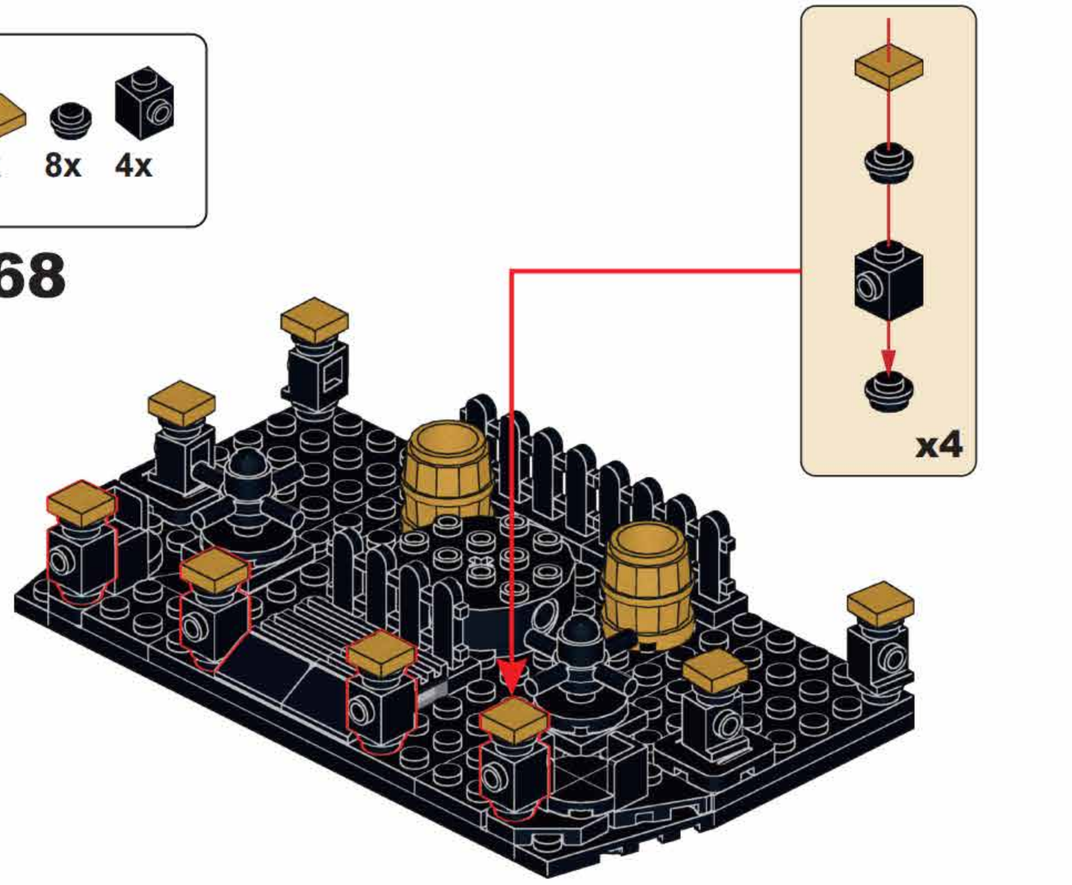

x4

4x

1X8

H69

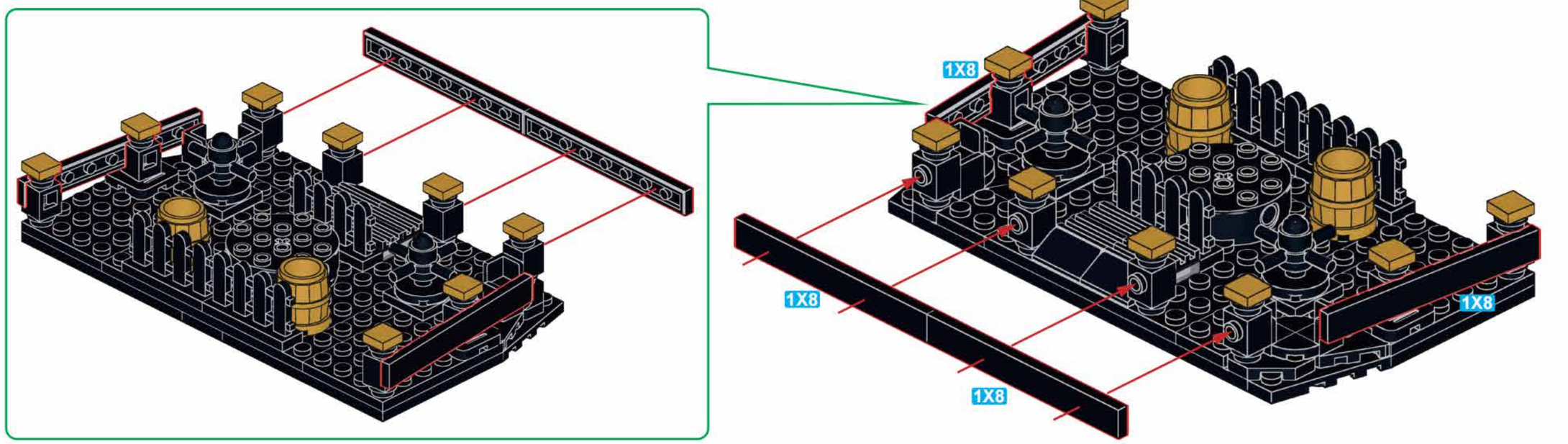

H70

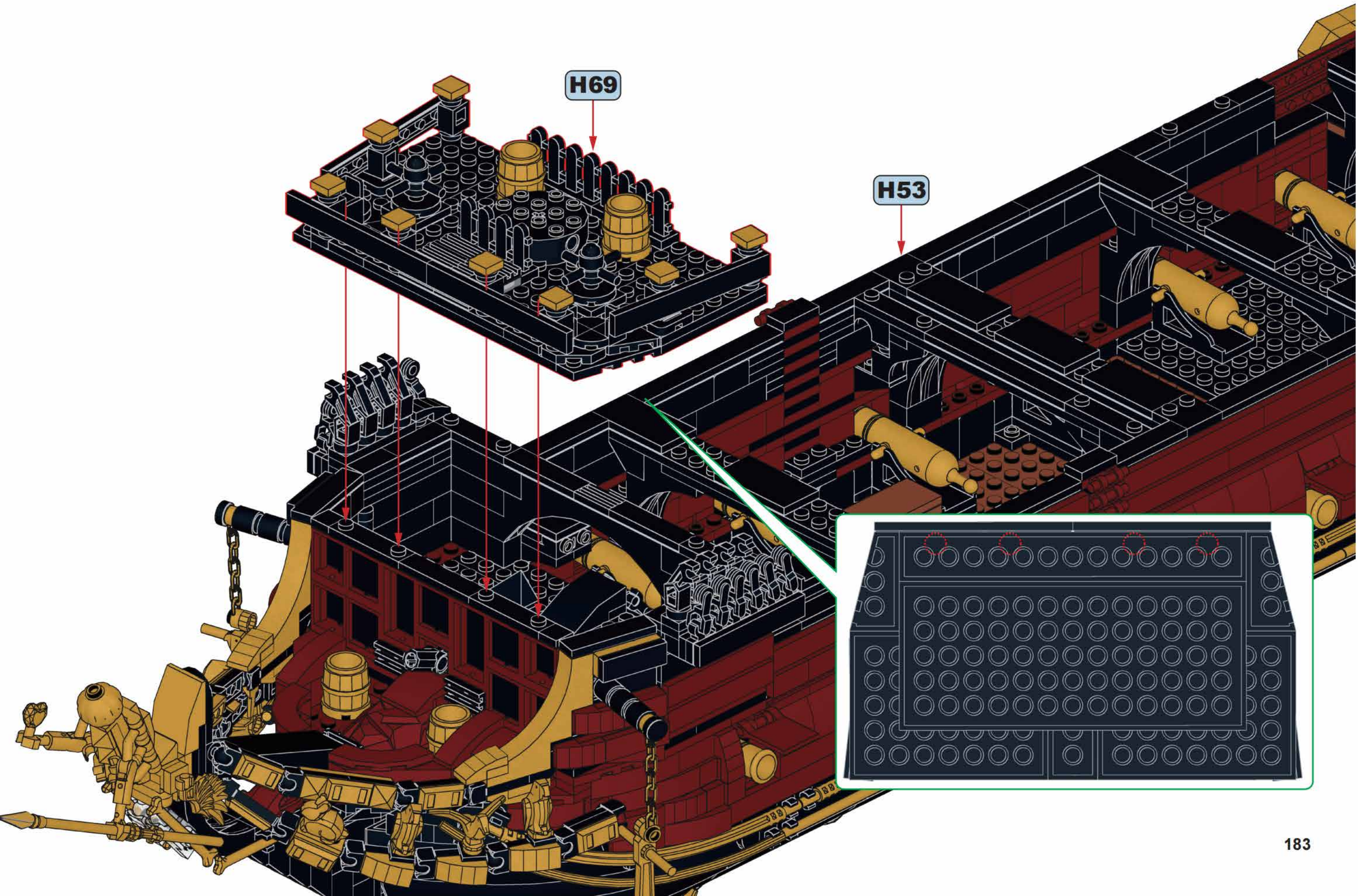

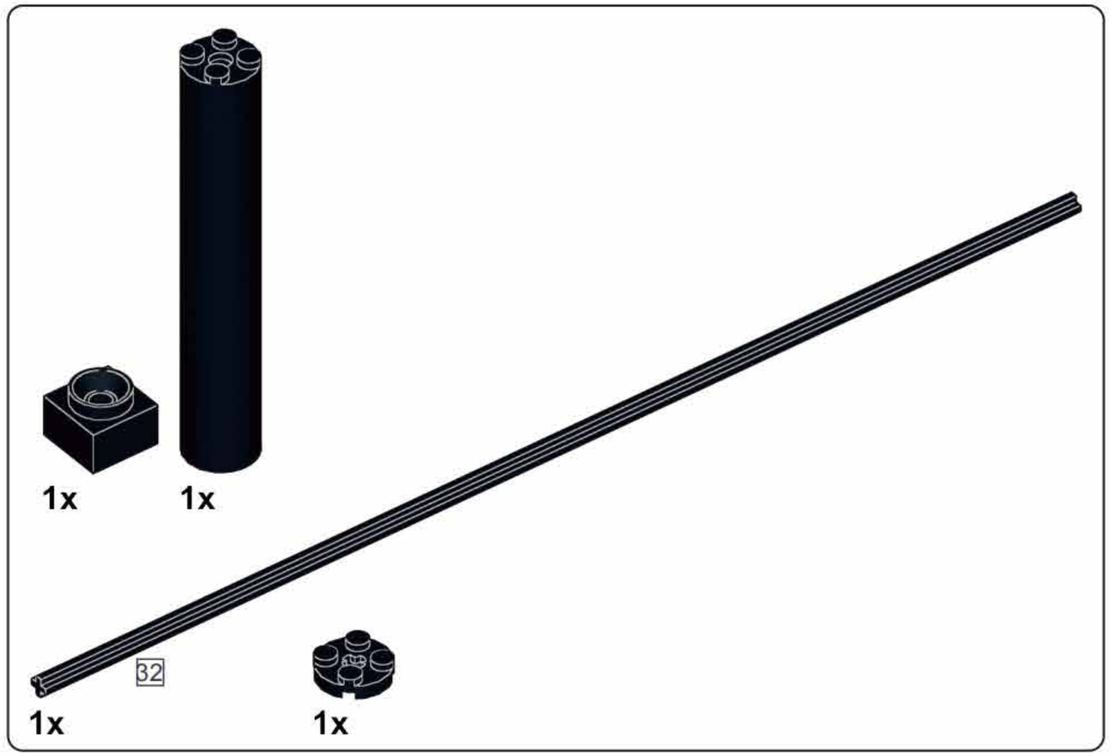

H71

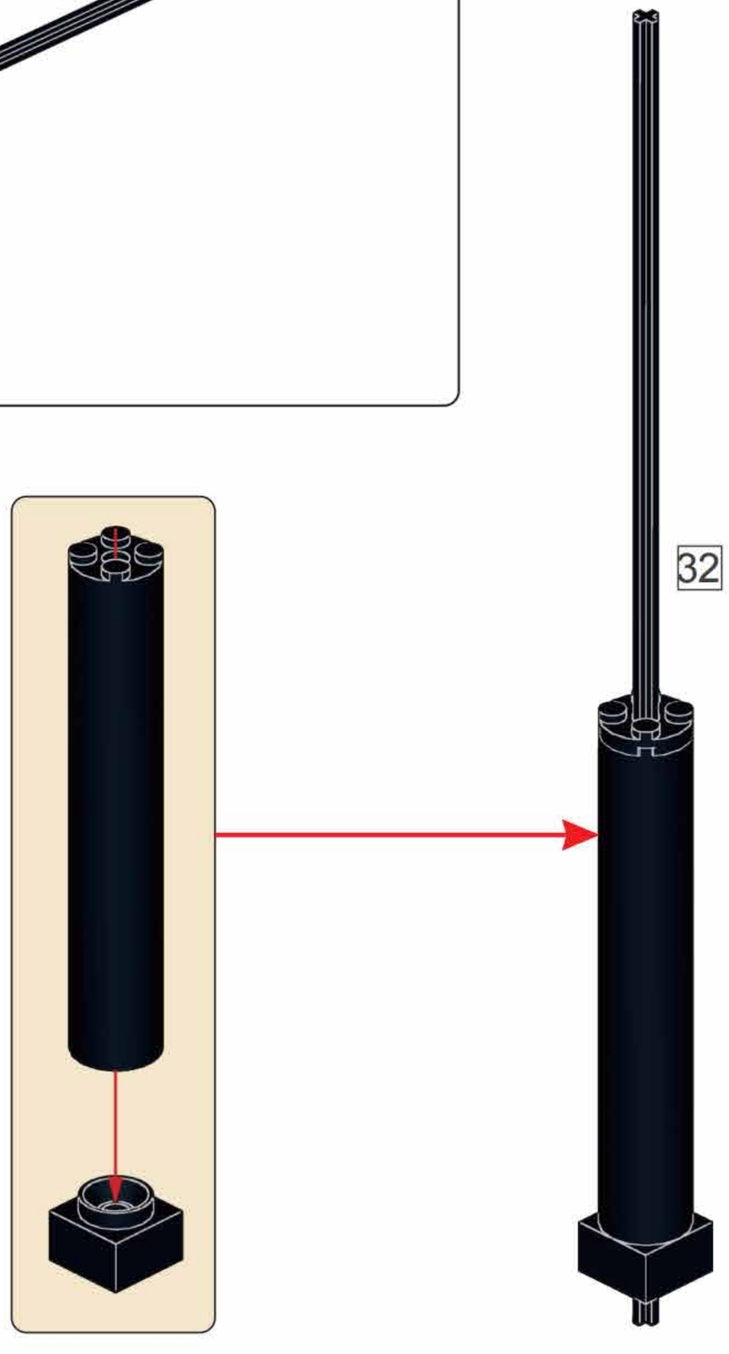

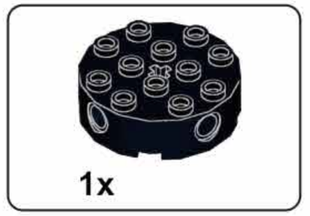

H72

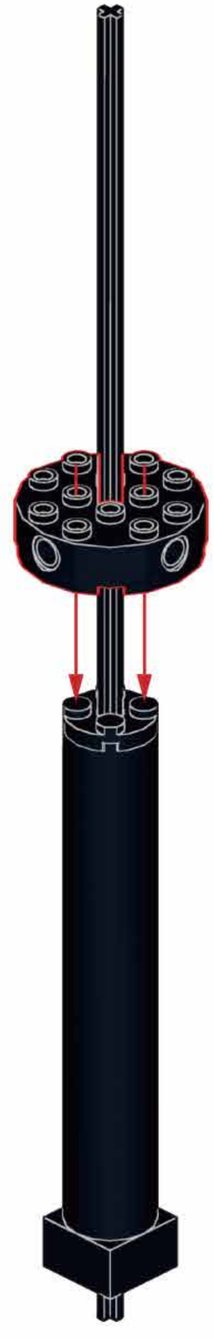

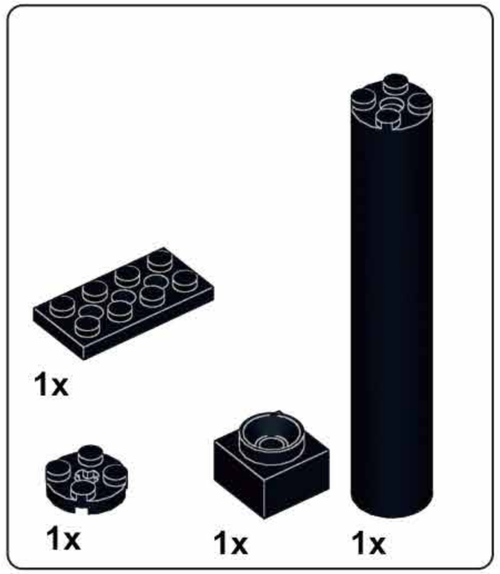

H73

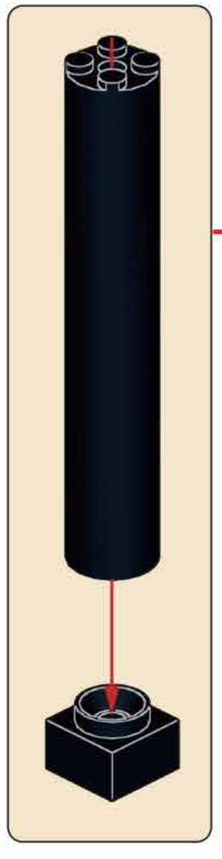

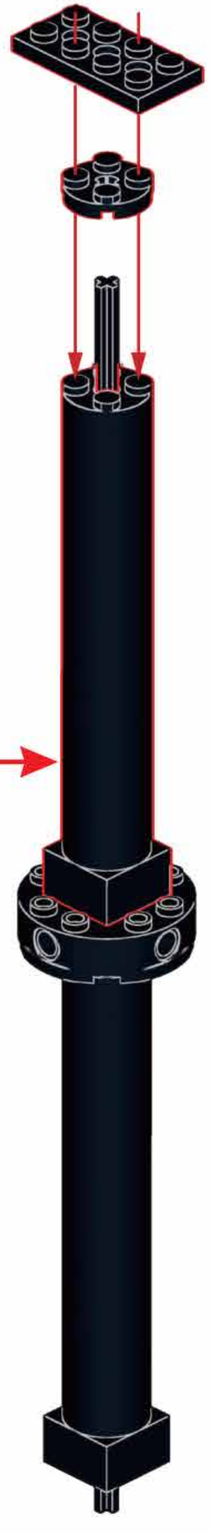

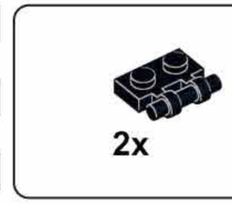

H74

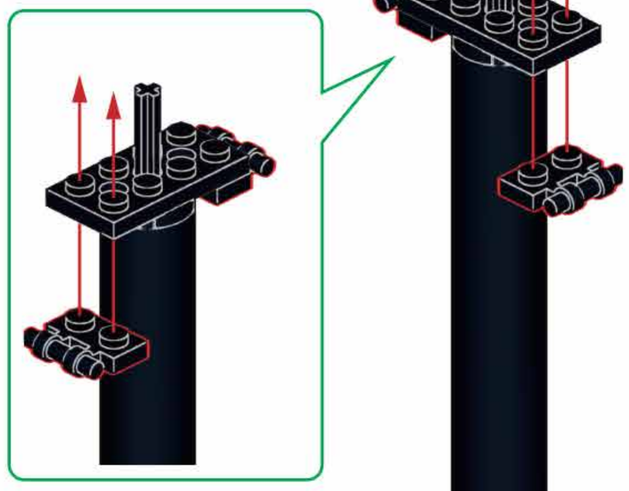

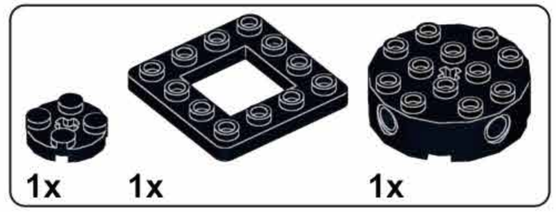

H75

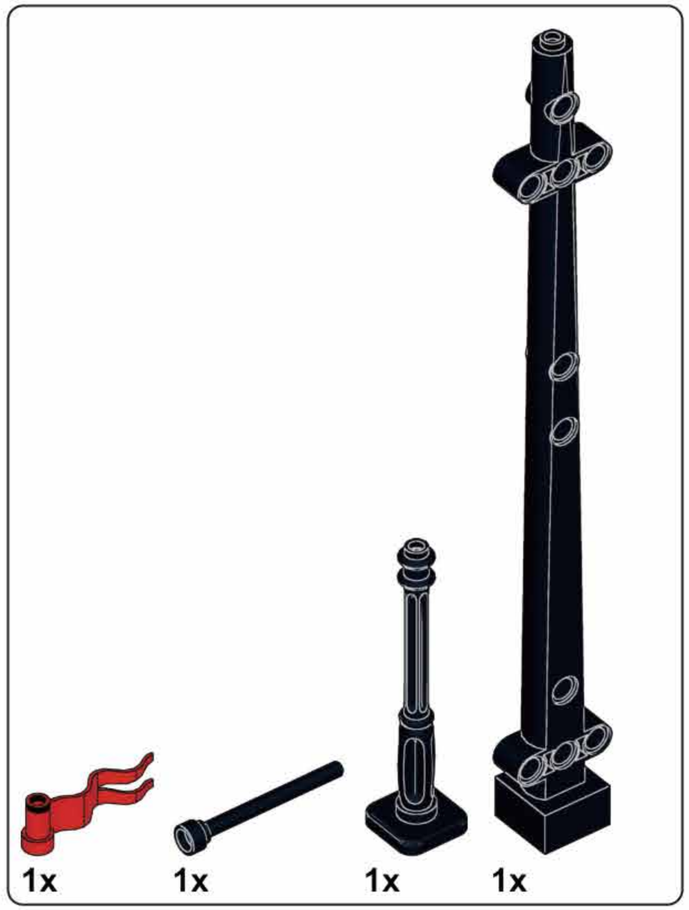

H76

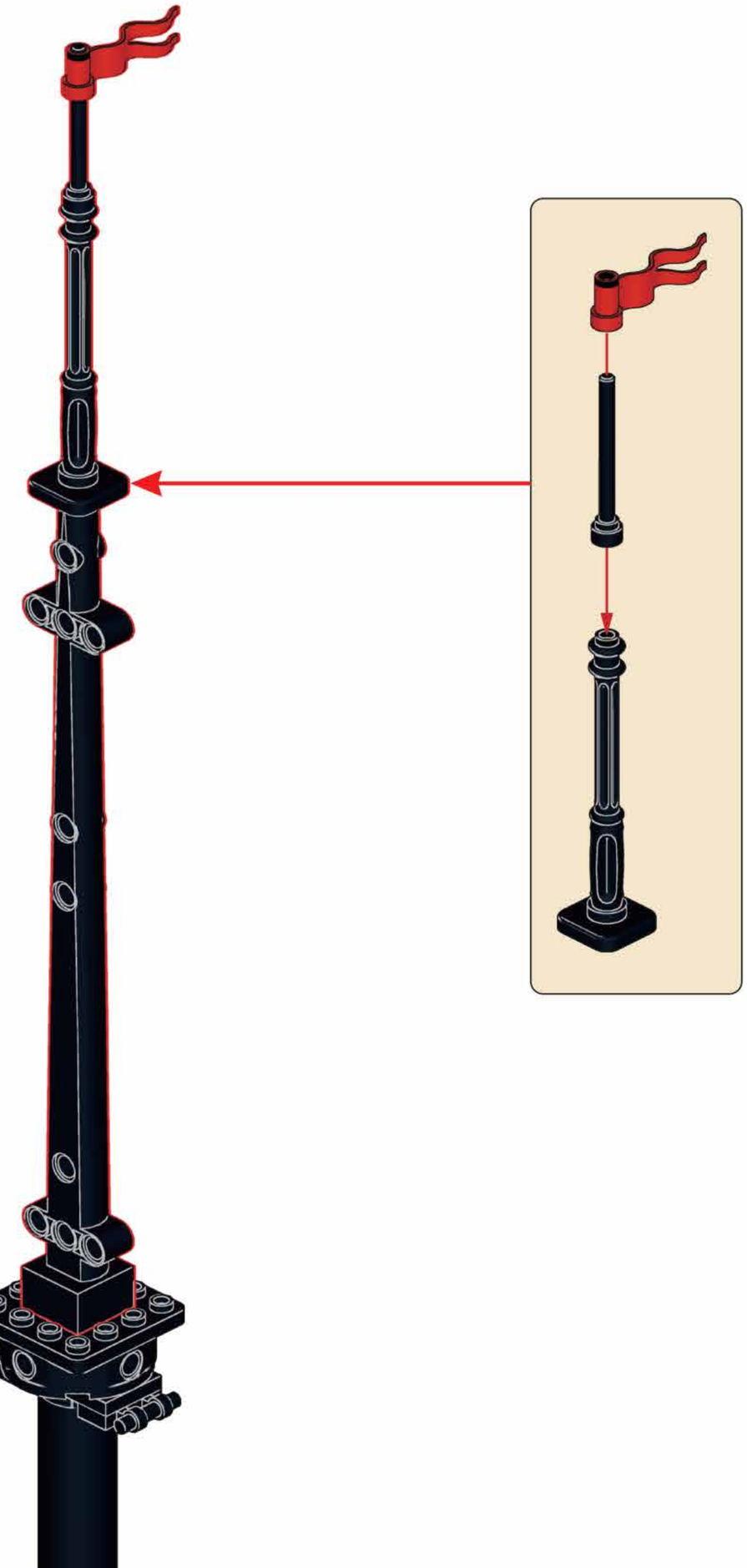

H77

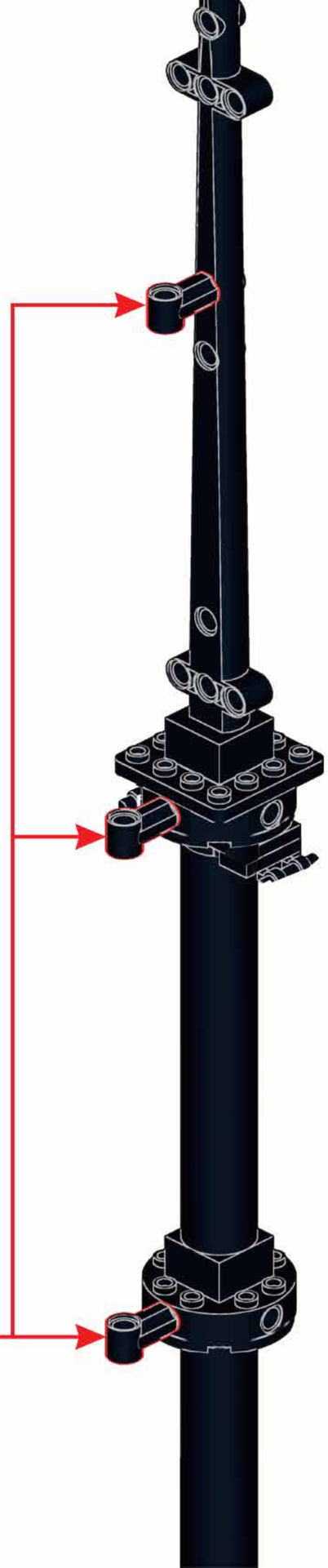

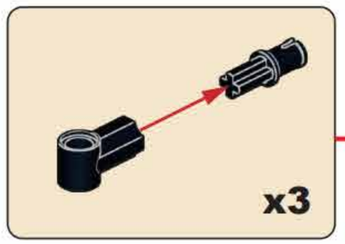

H78

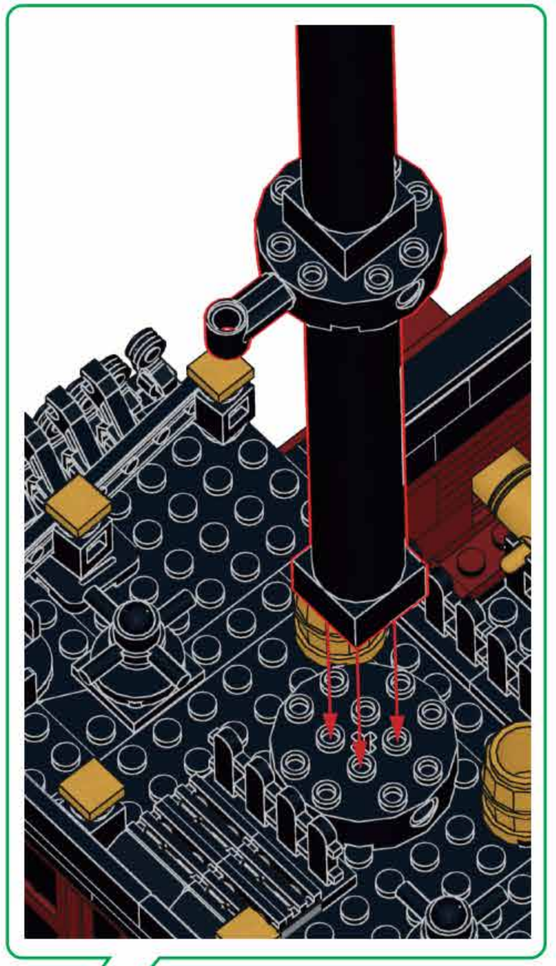

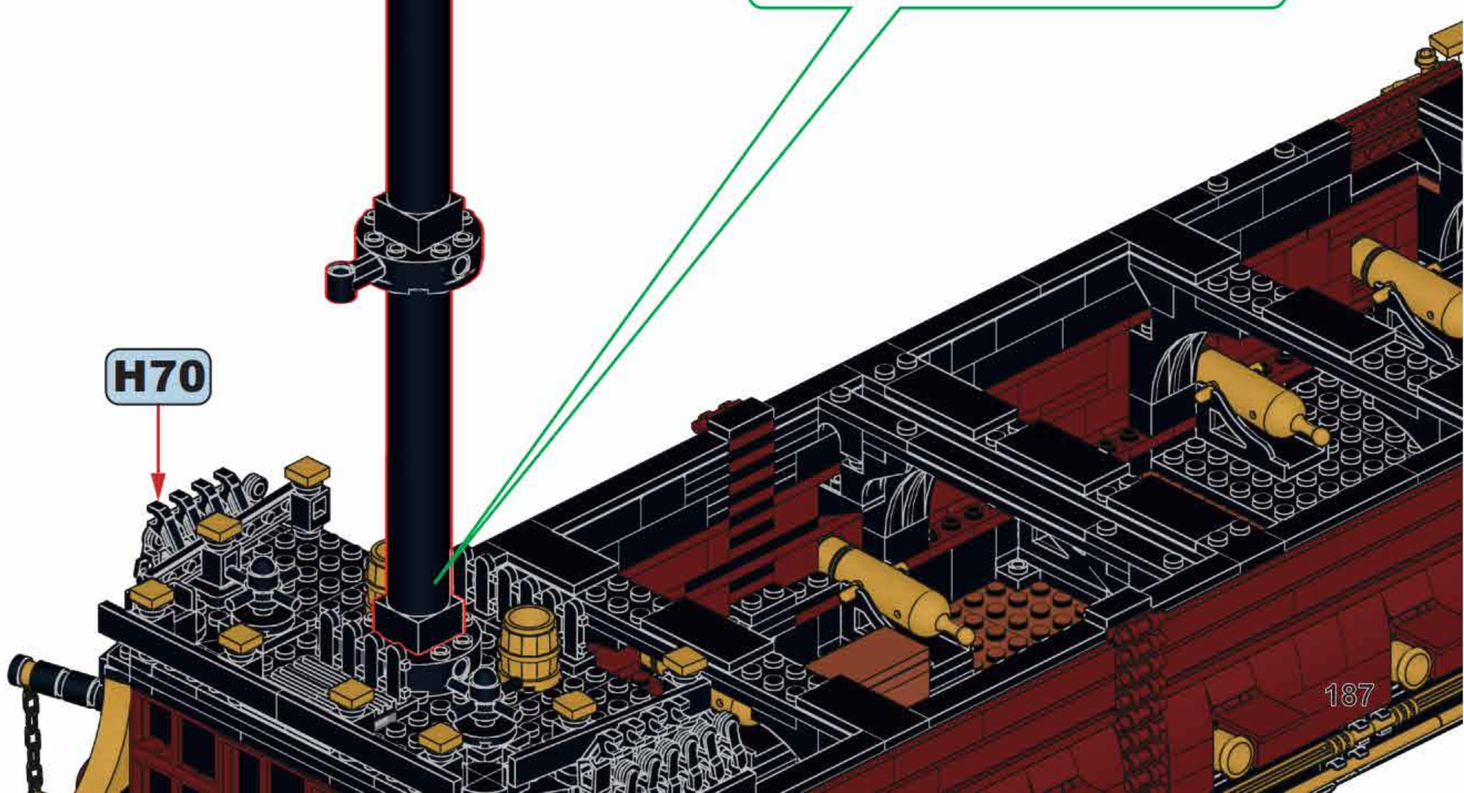

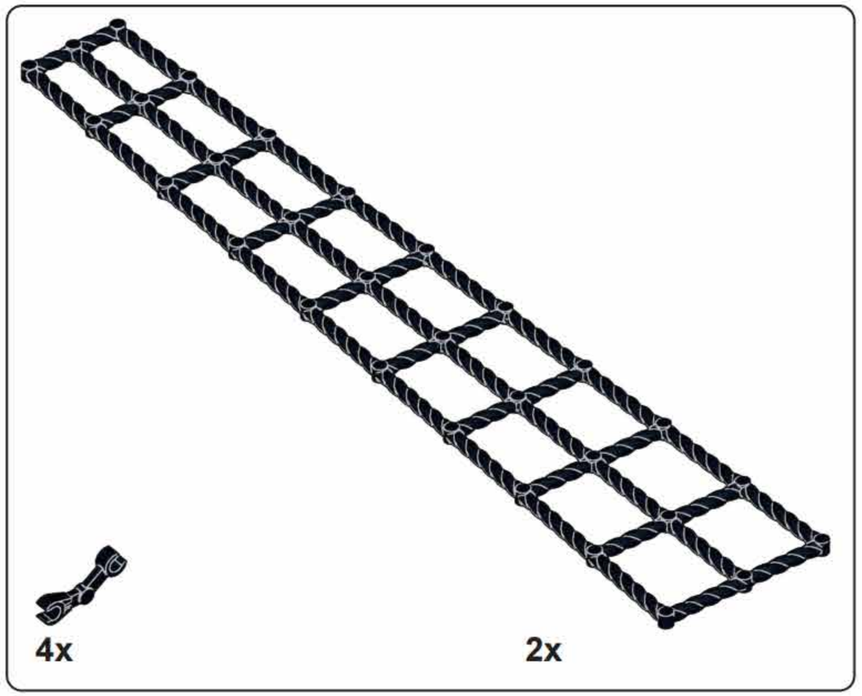

H79

9

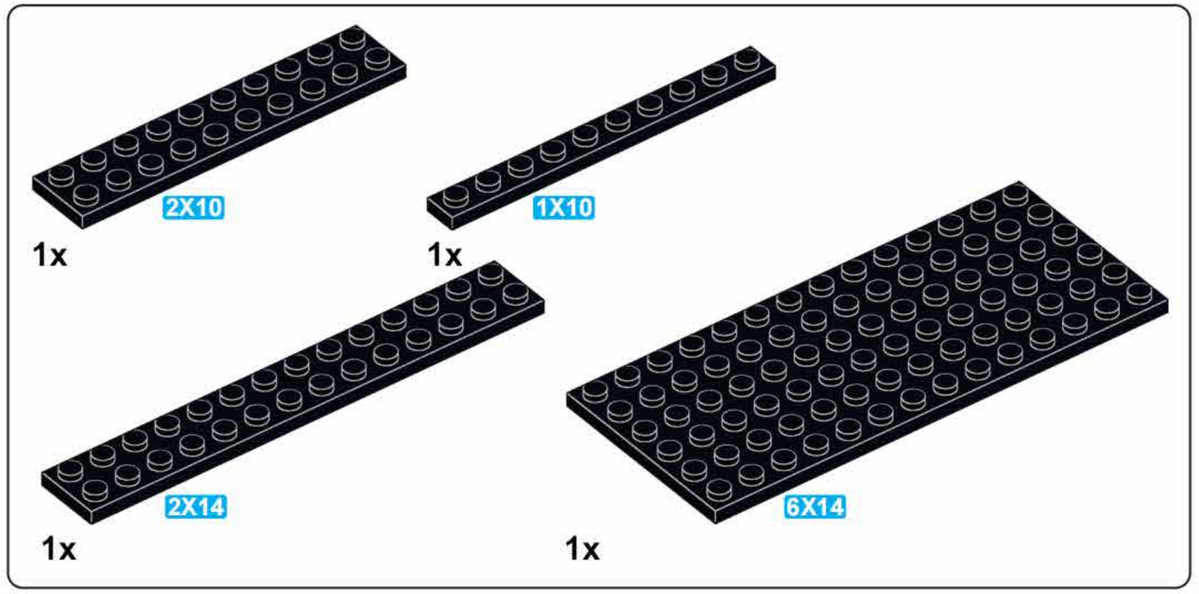
2X10
1x
1X10
1x
2X14
1x
6X14
1x

I1

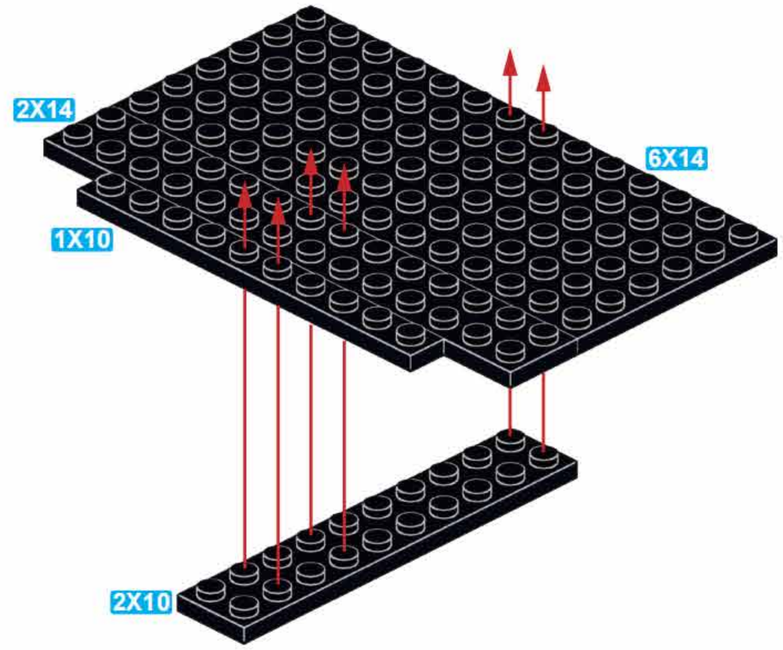
2X14
6X14
1X10
2X10

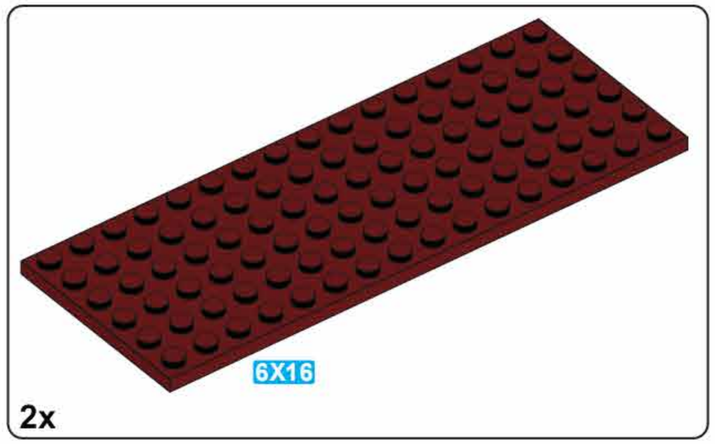
6X16
2x

I2

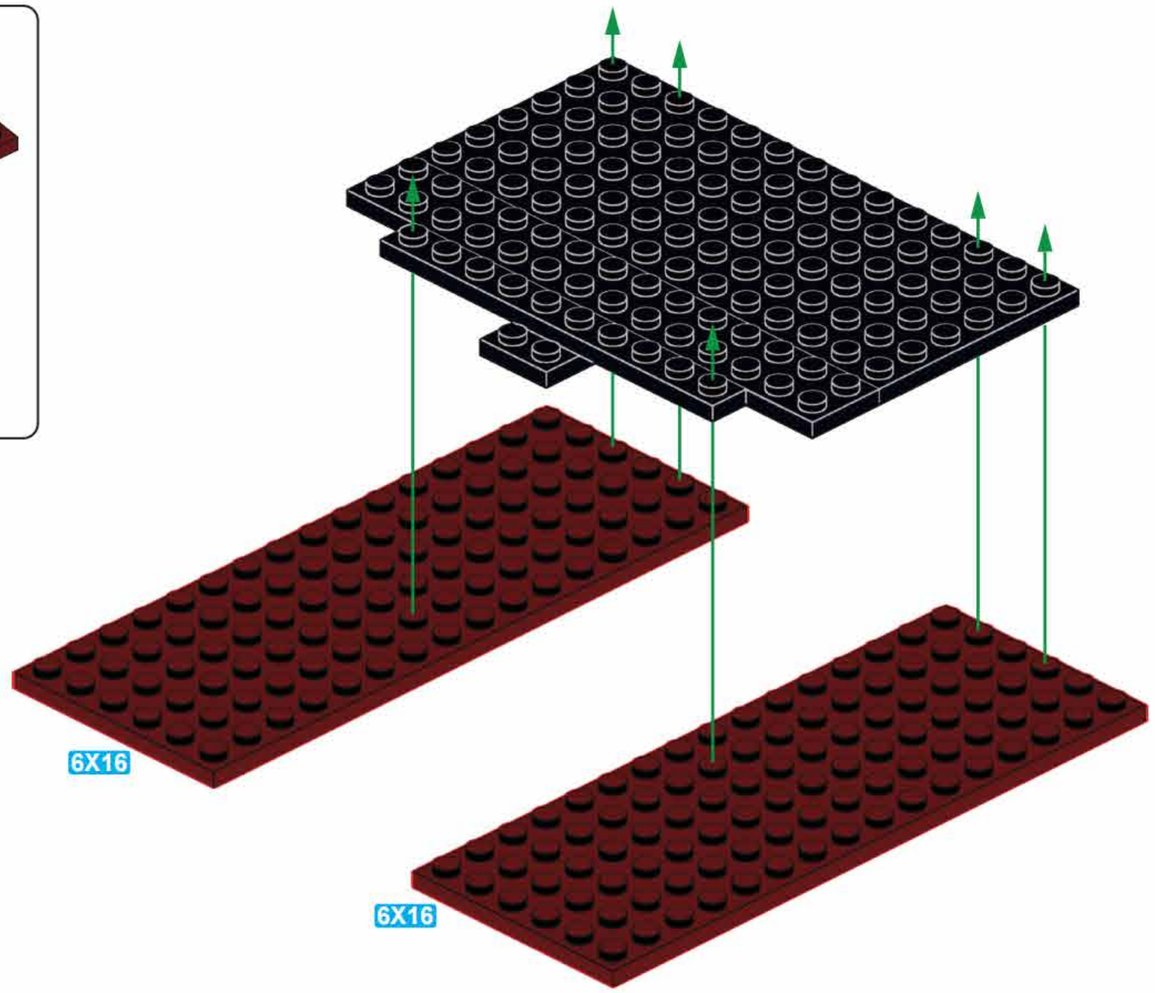
6X16
6X16

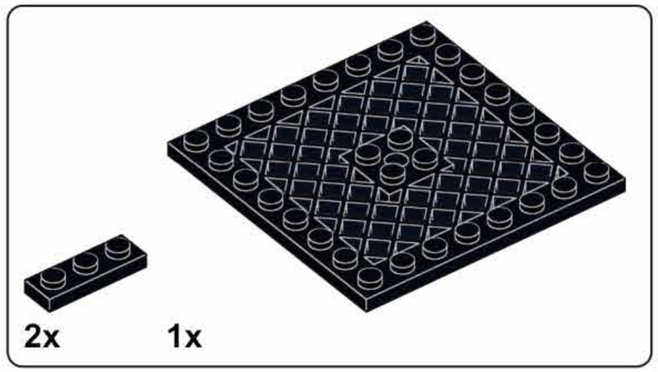

I3

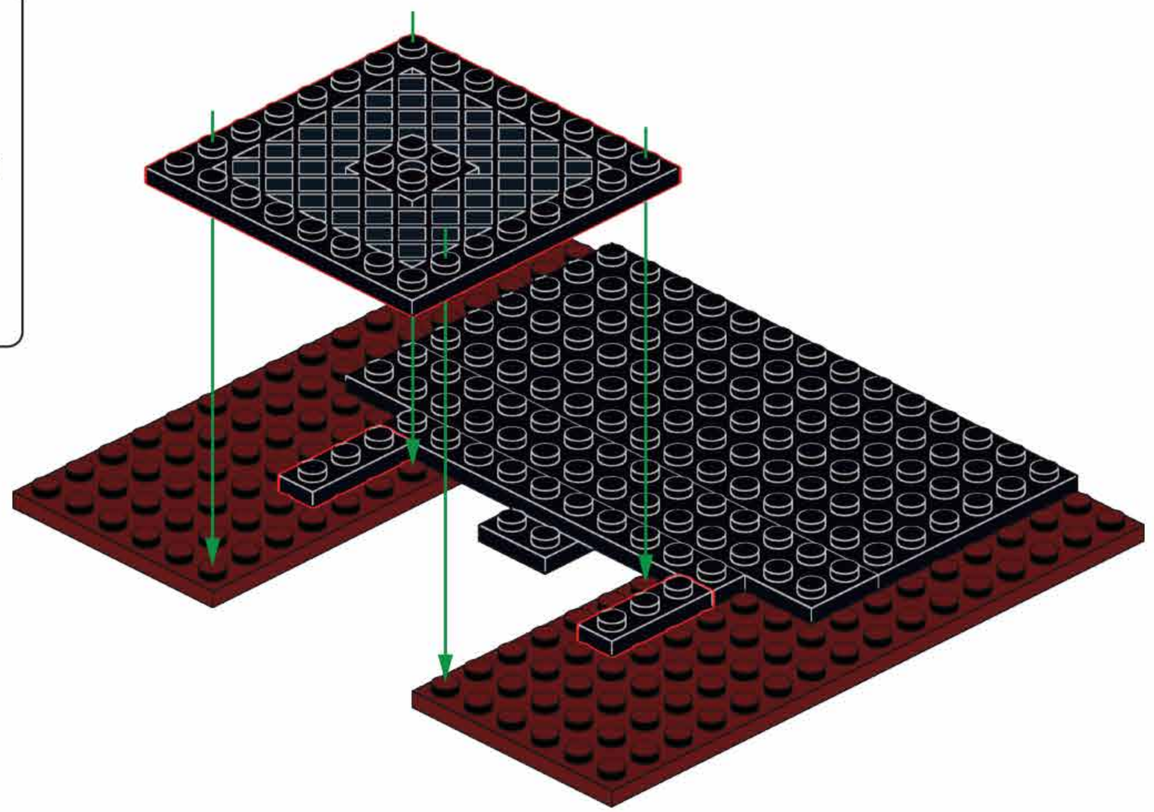

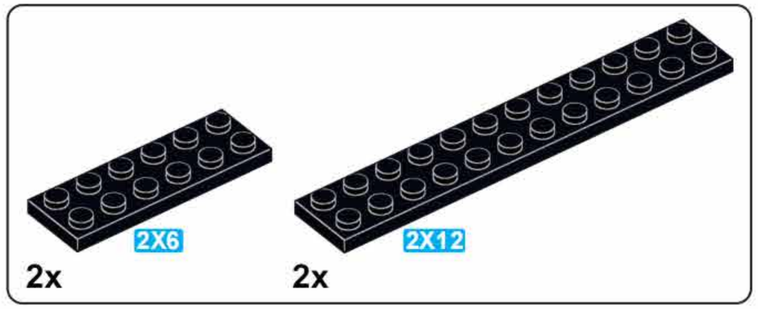

I4

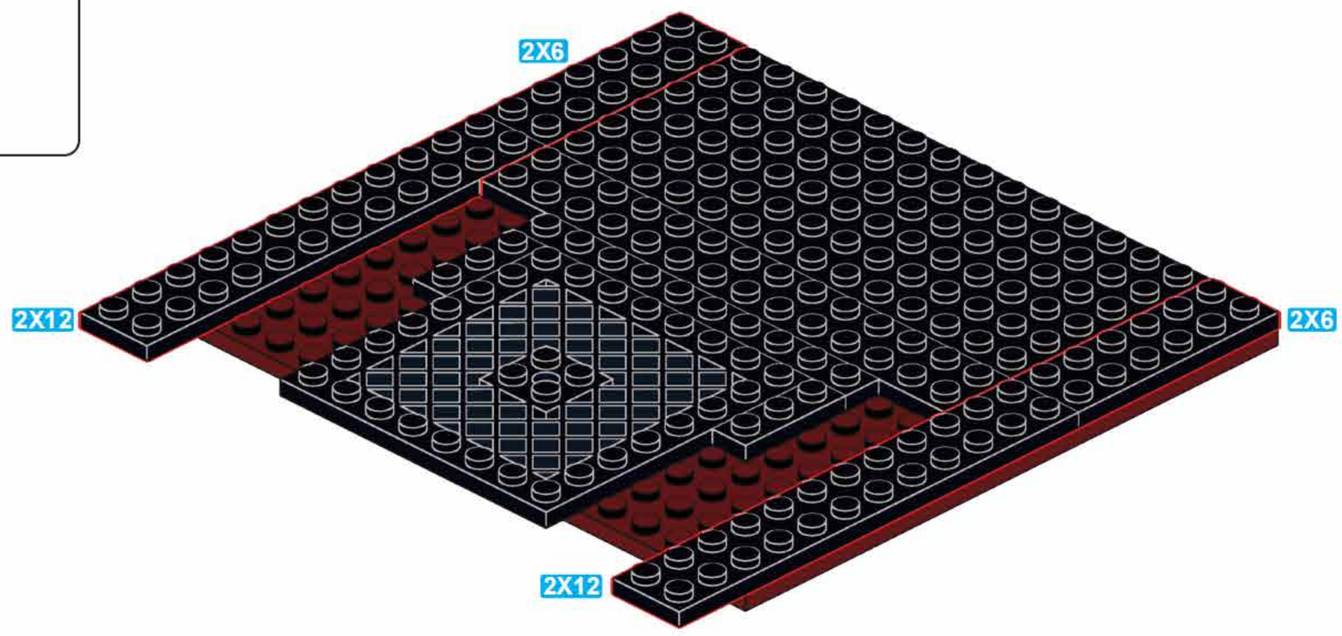

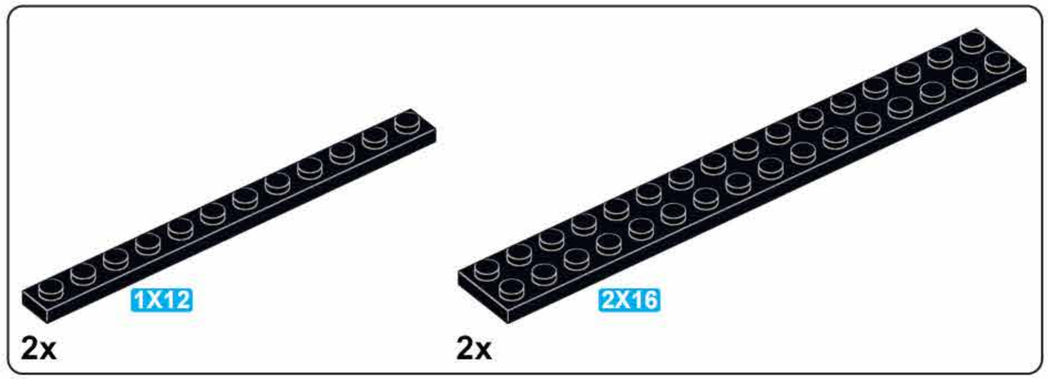

I5

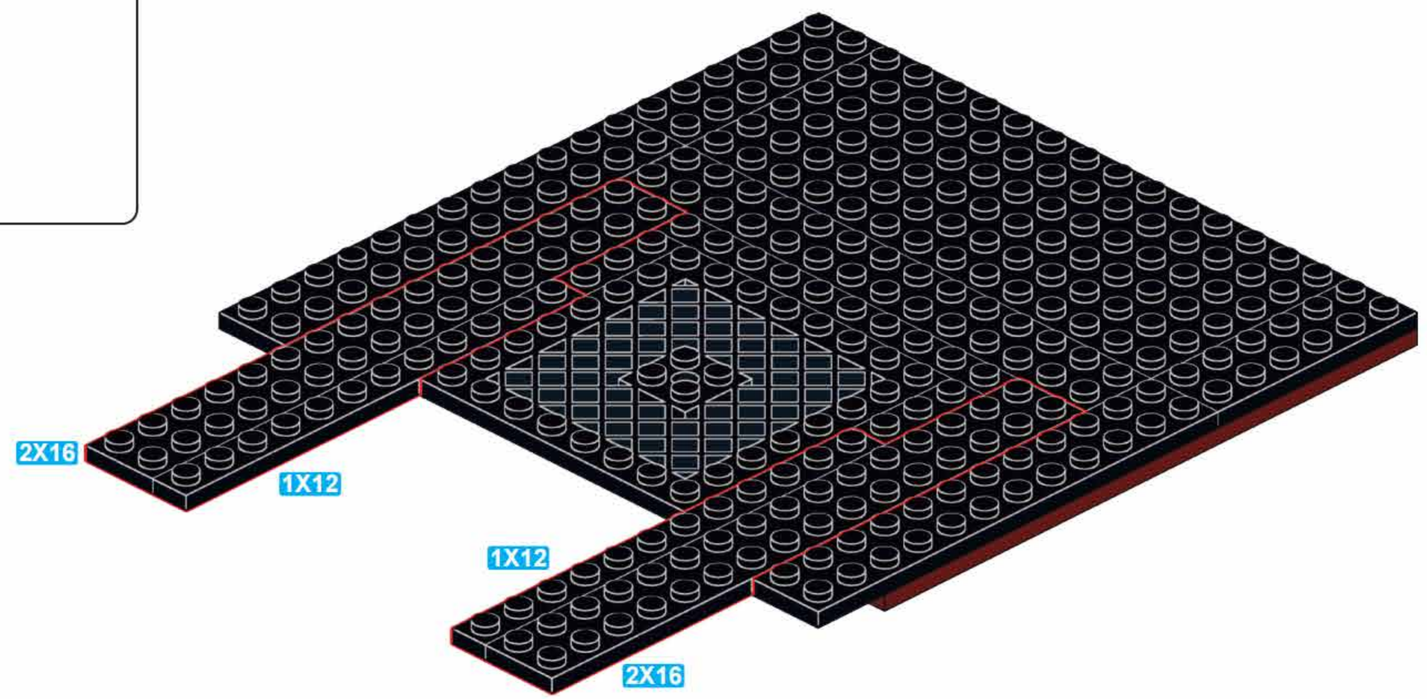

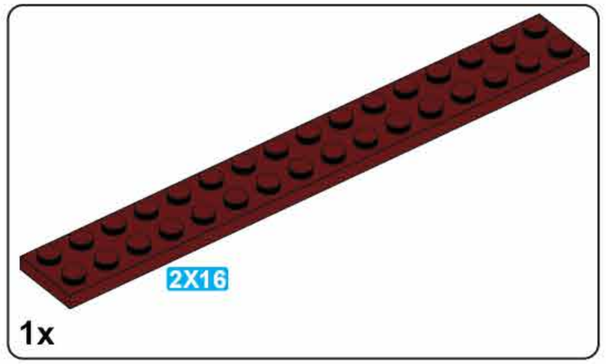

I6

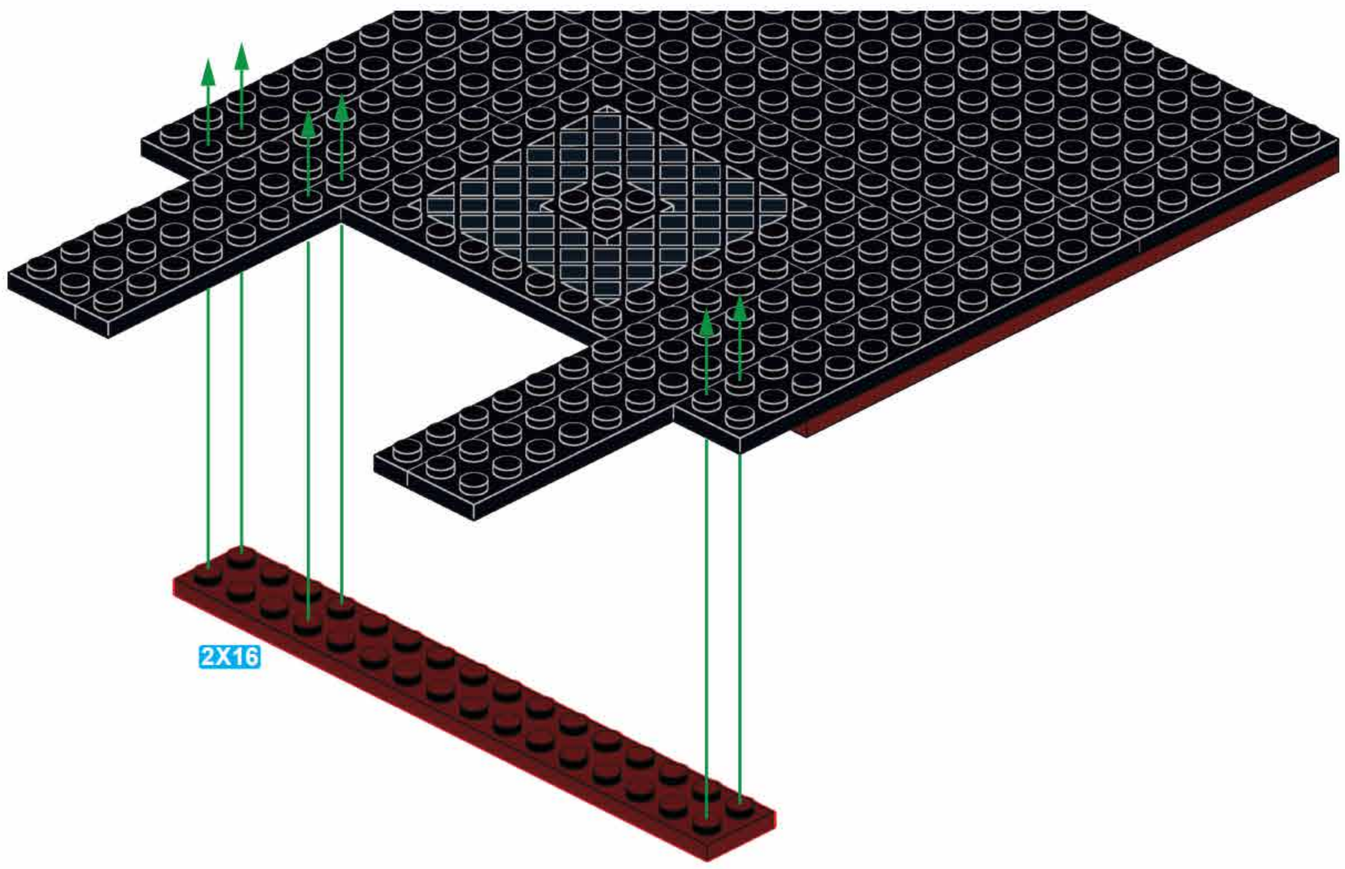

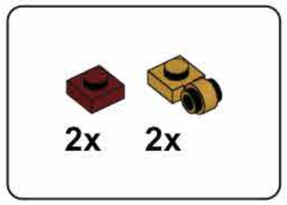

17

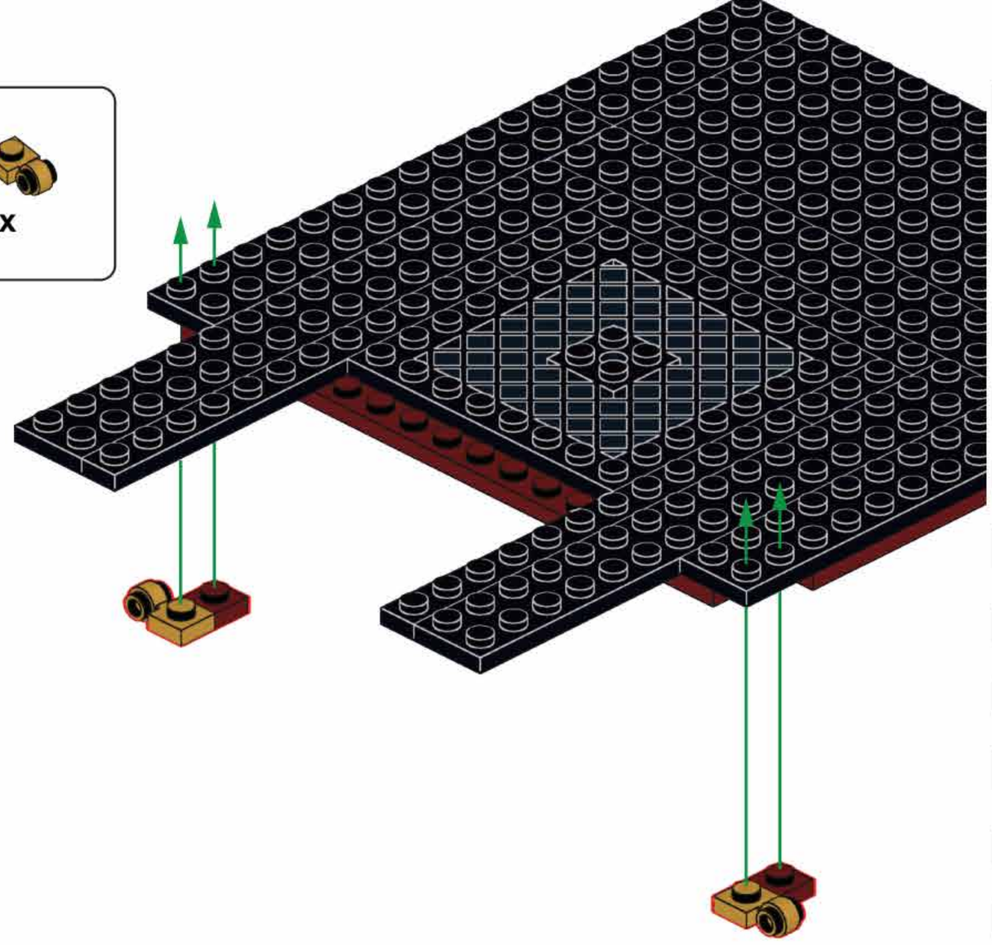

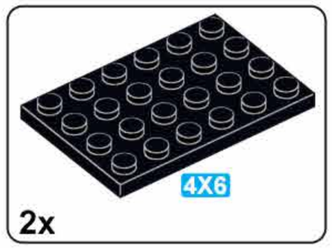

18

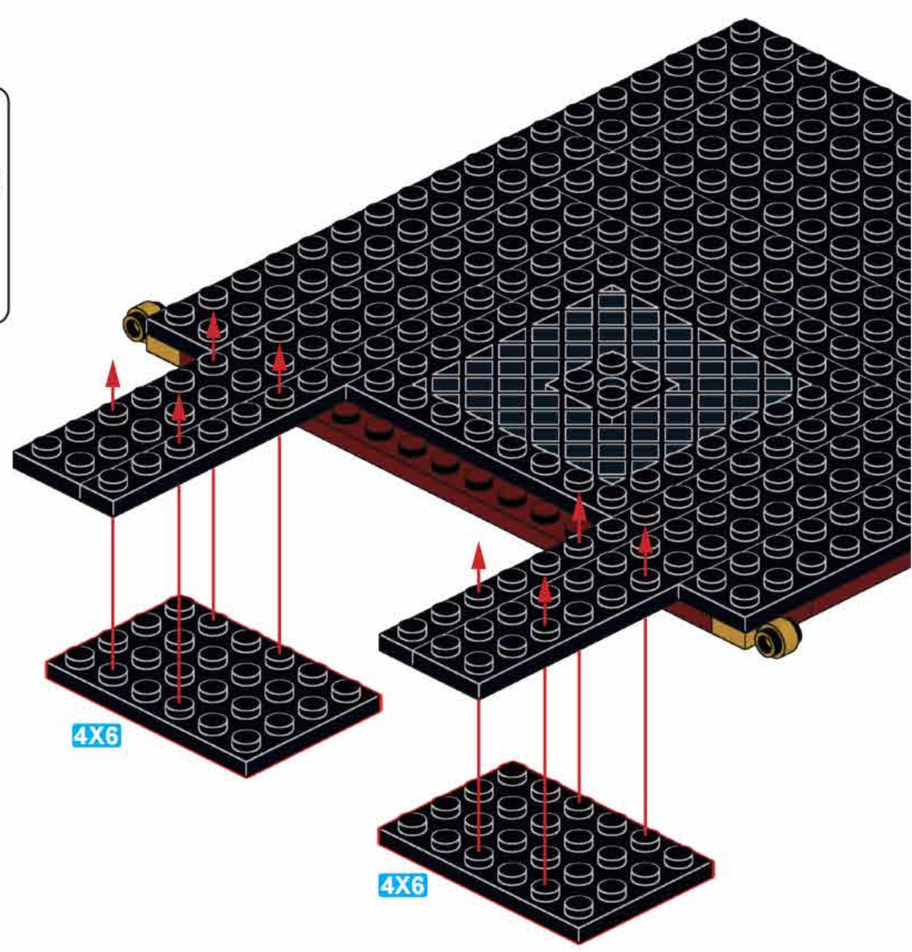

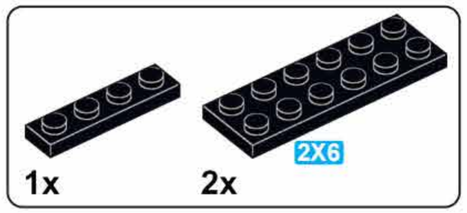

19

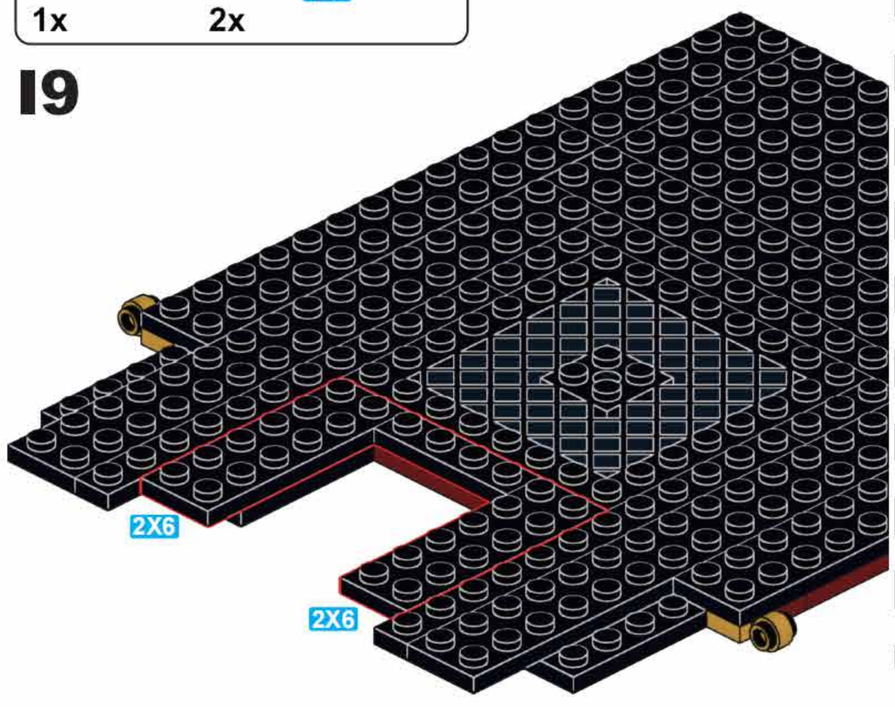

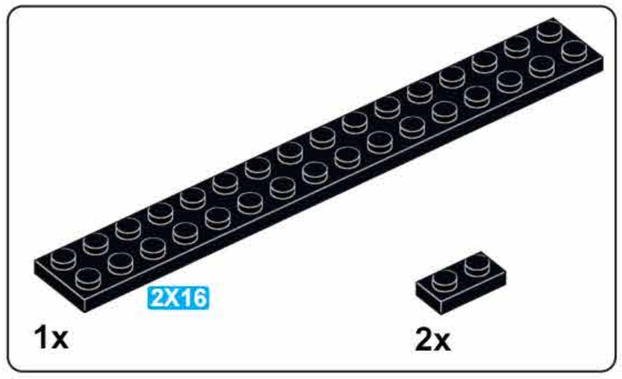

110

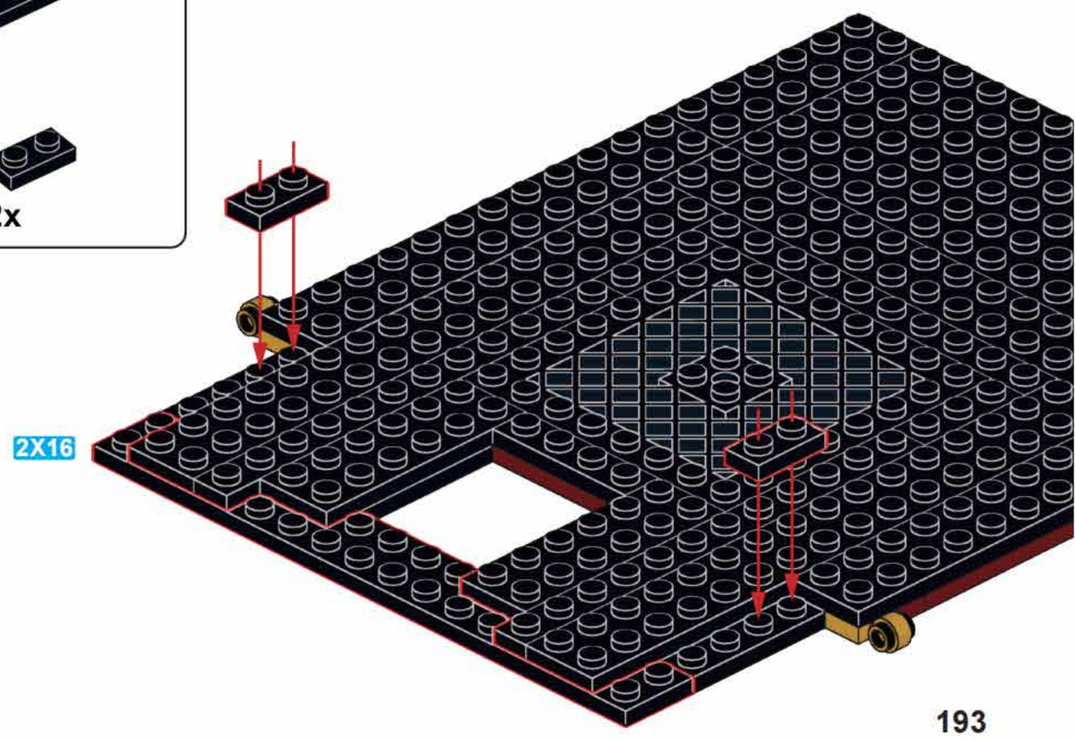

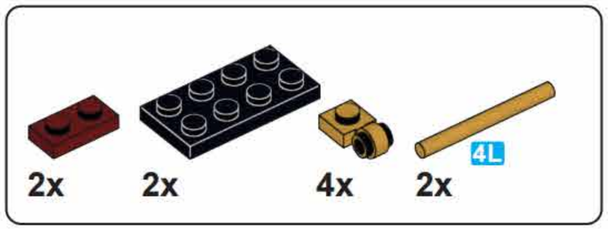

I11

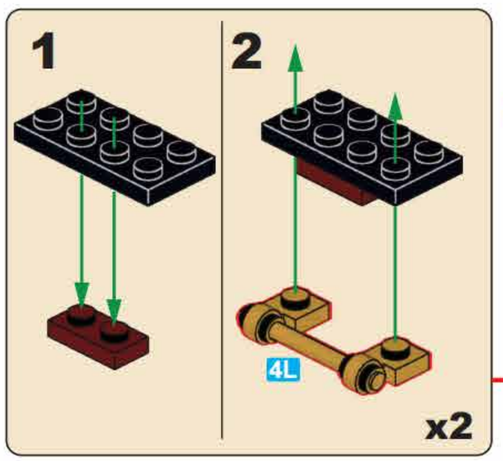

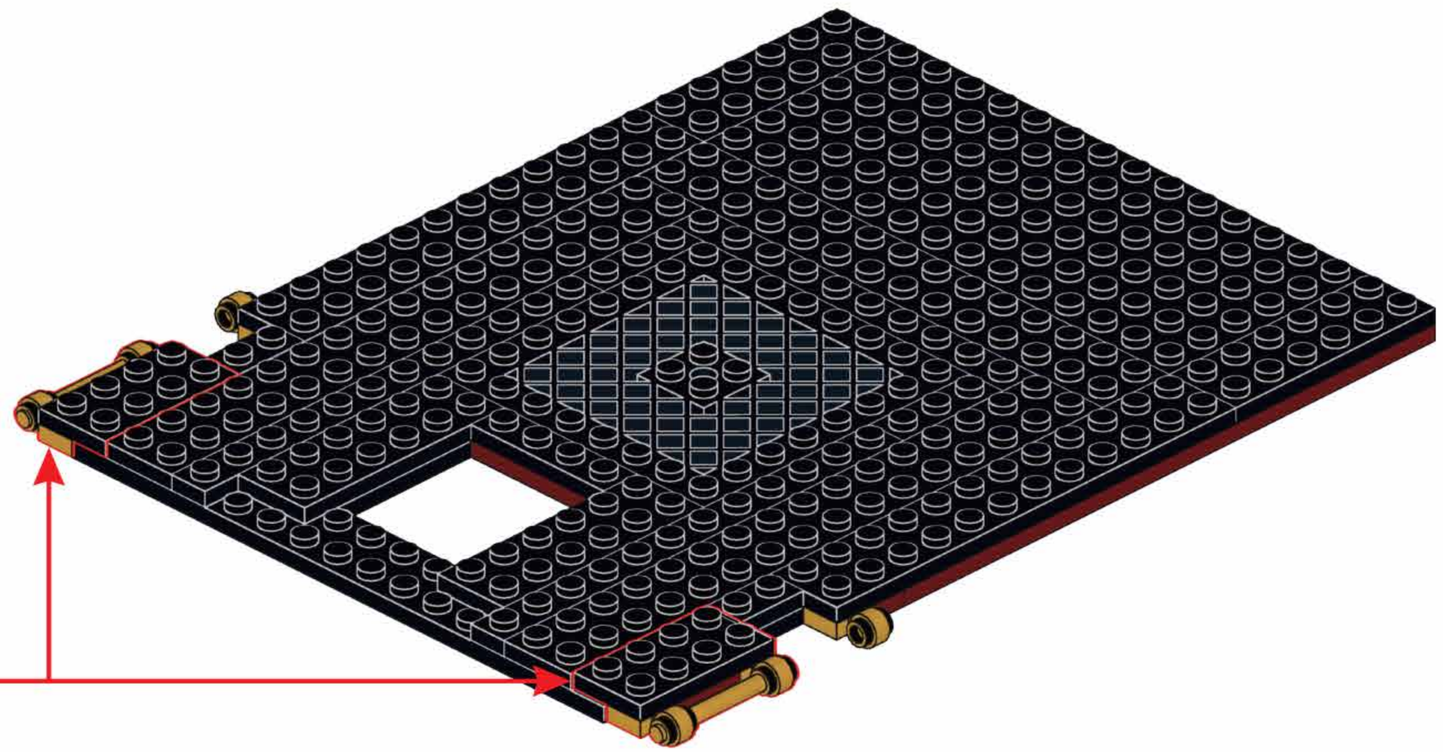

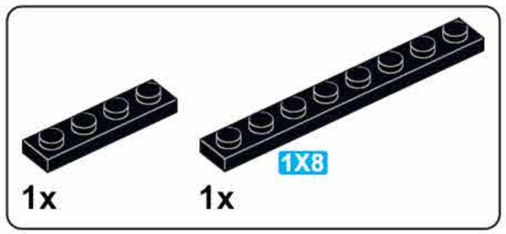

I12

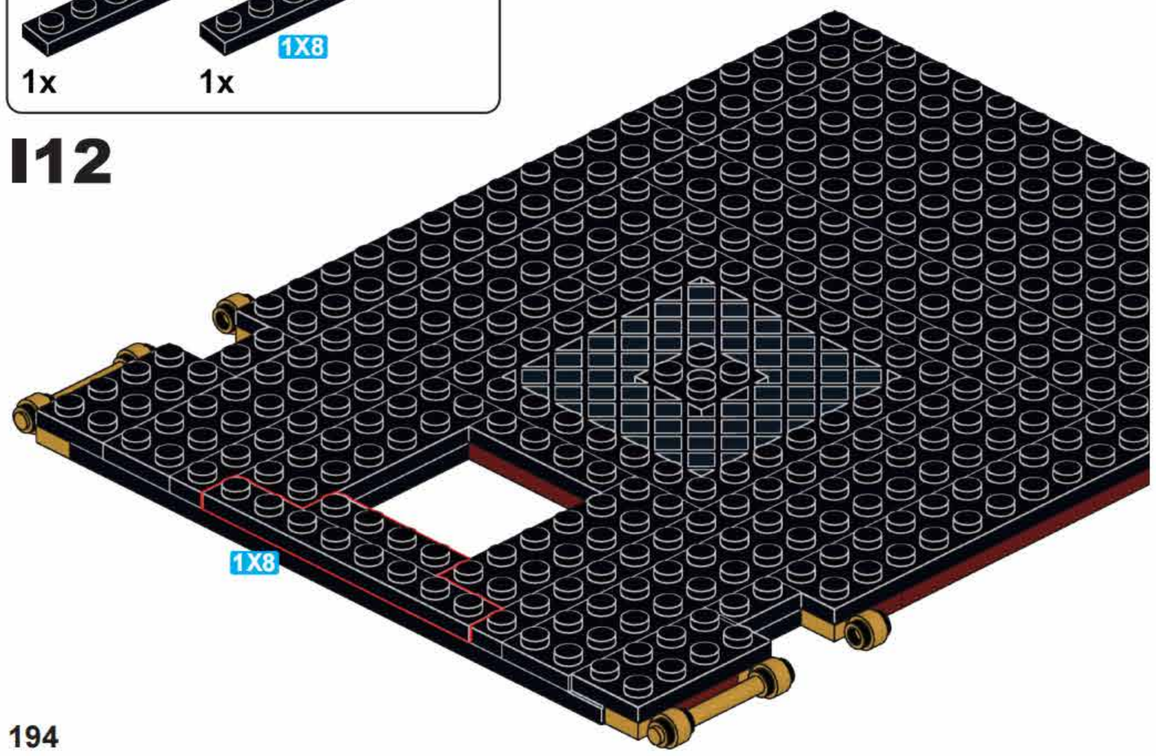

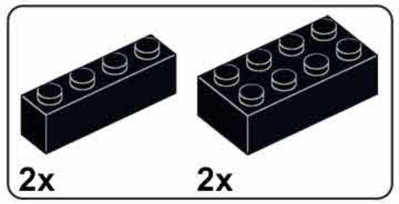

I13

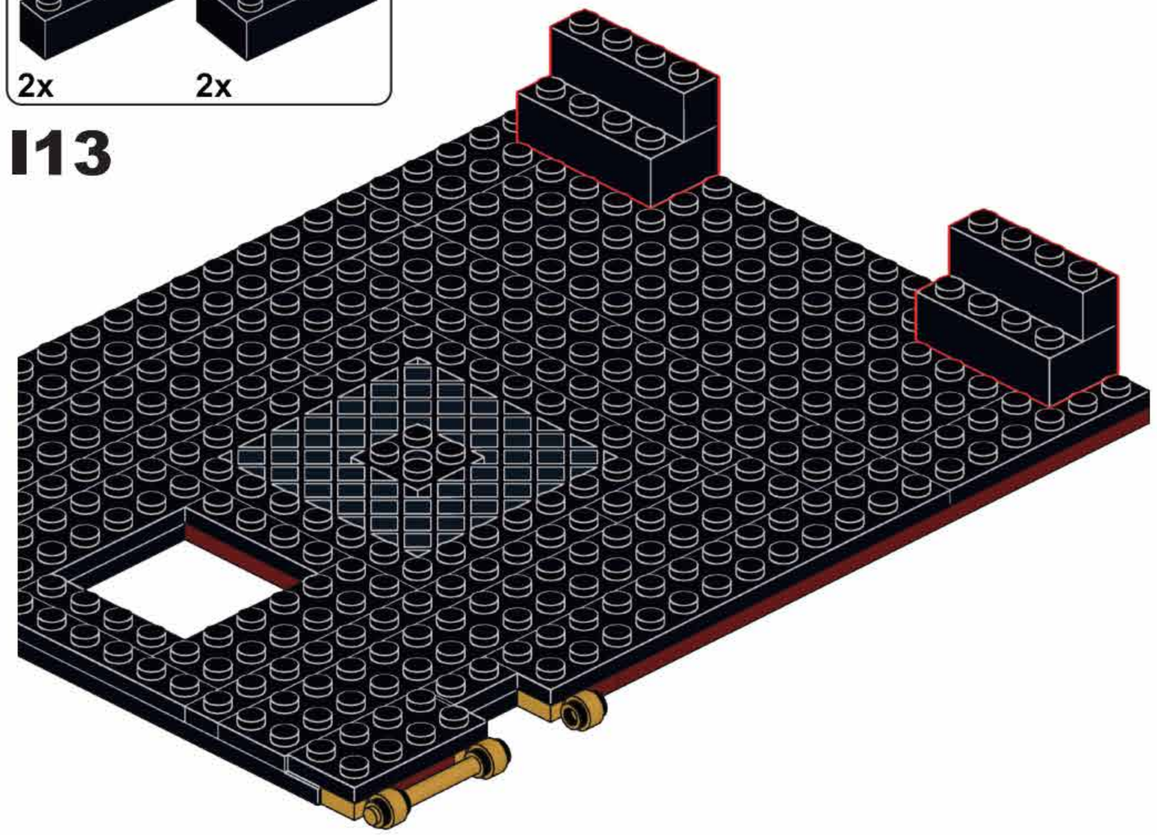

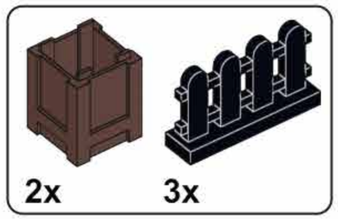

I14

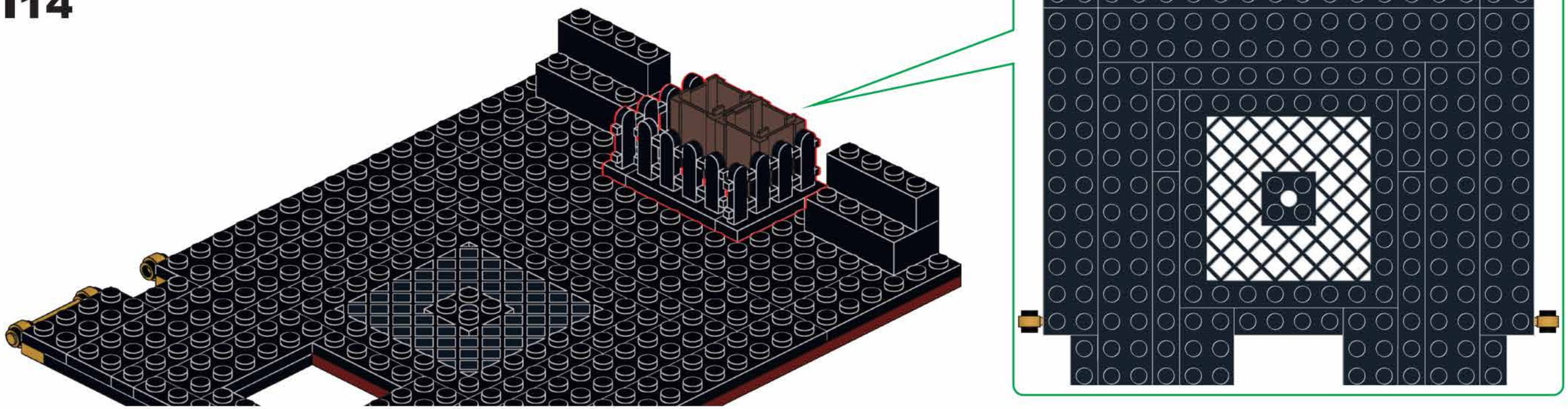

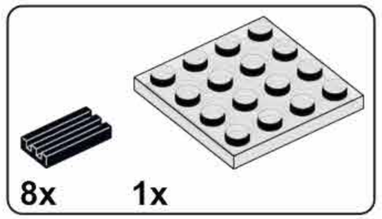

I15

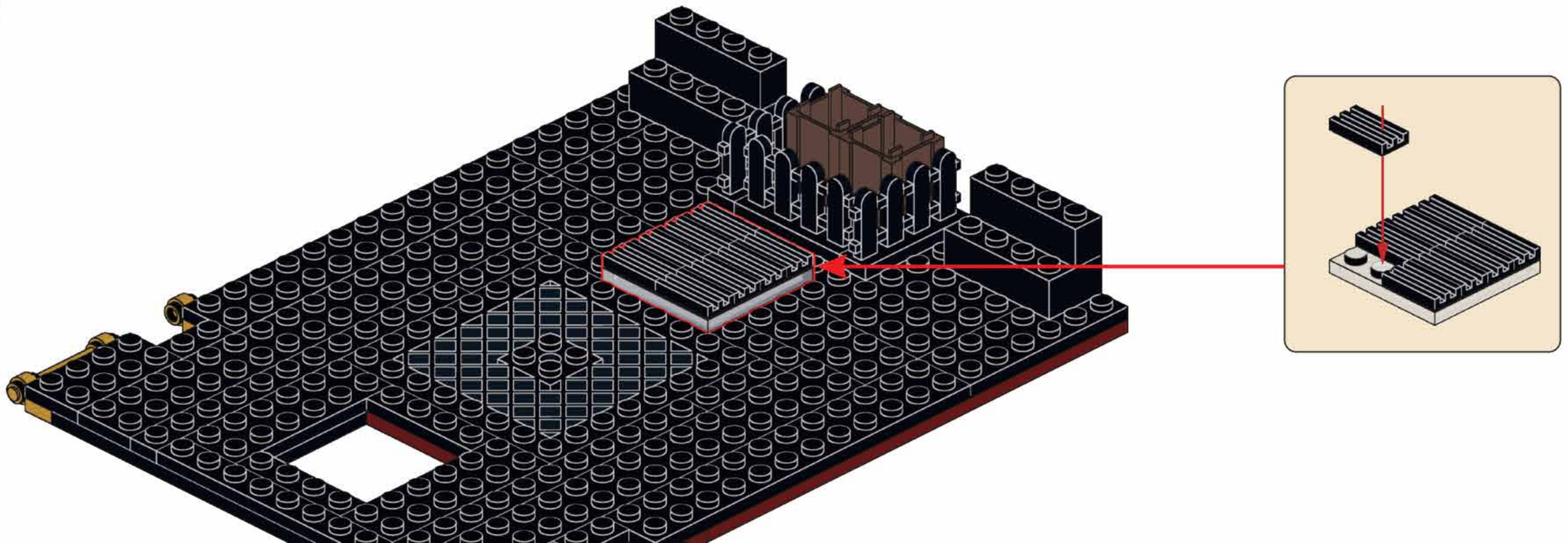

8x

I16

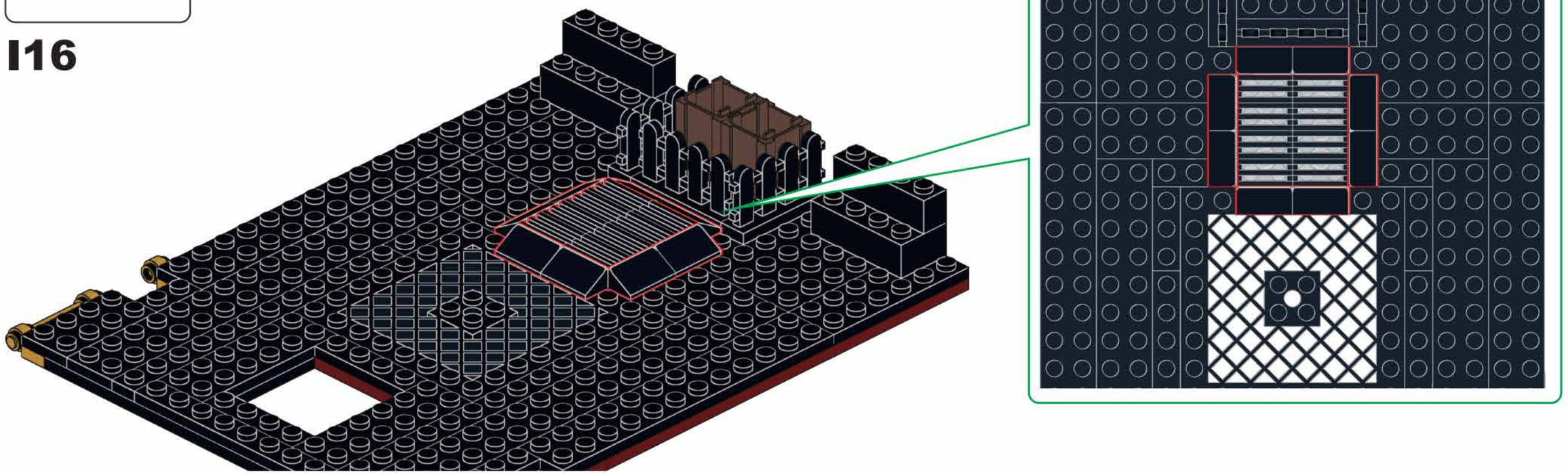

6x 2x

I17

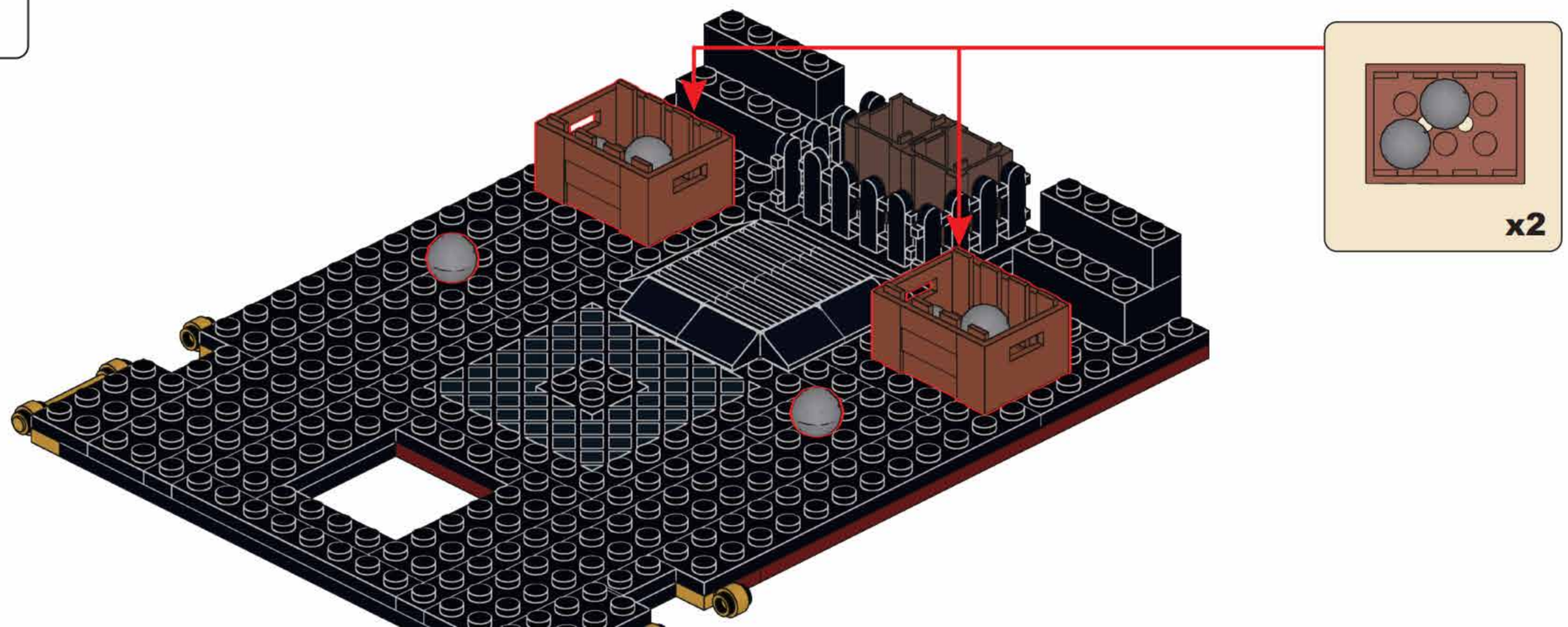

x2

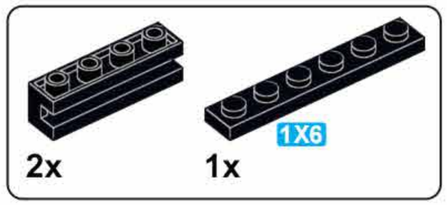

I18

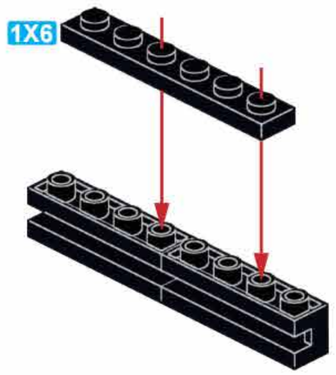

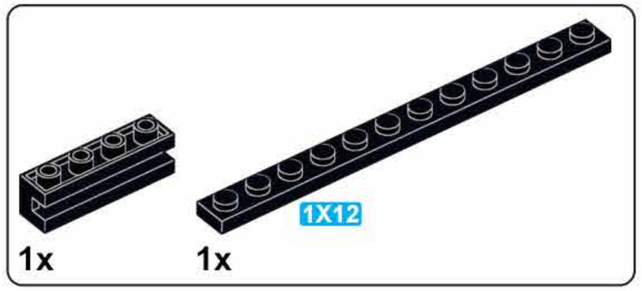

I19

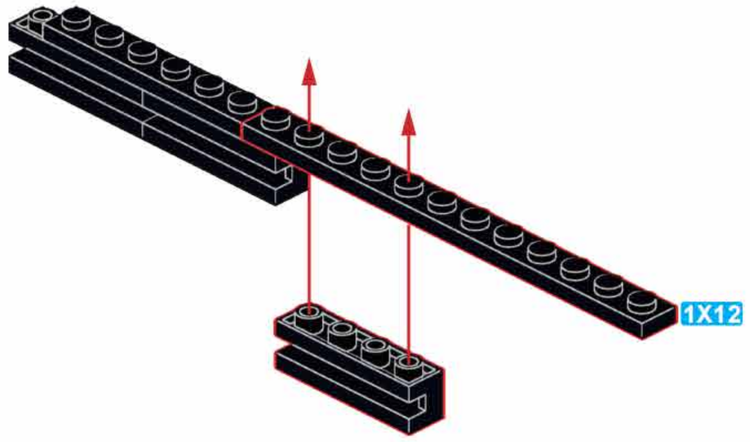

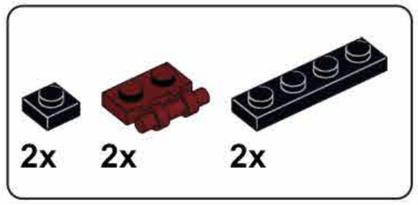

I20

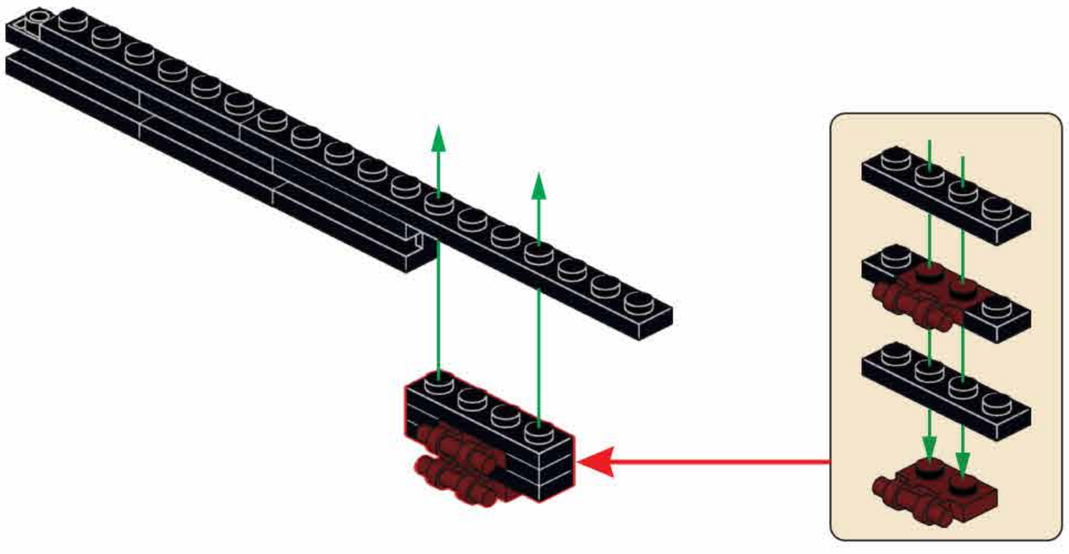

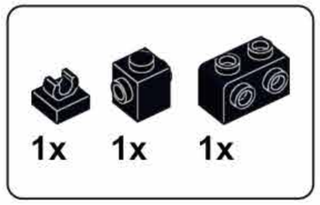

I21

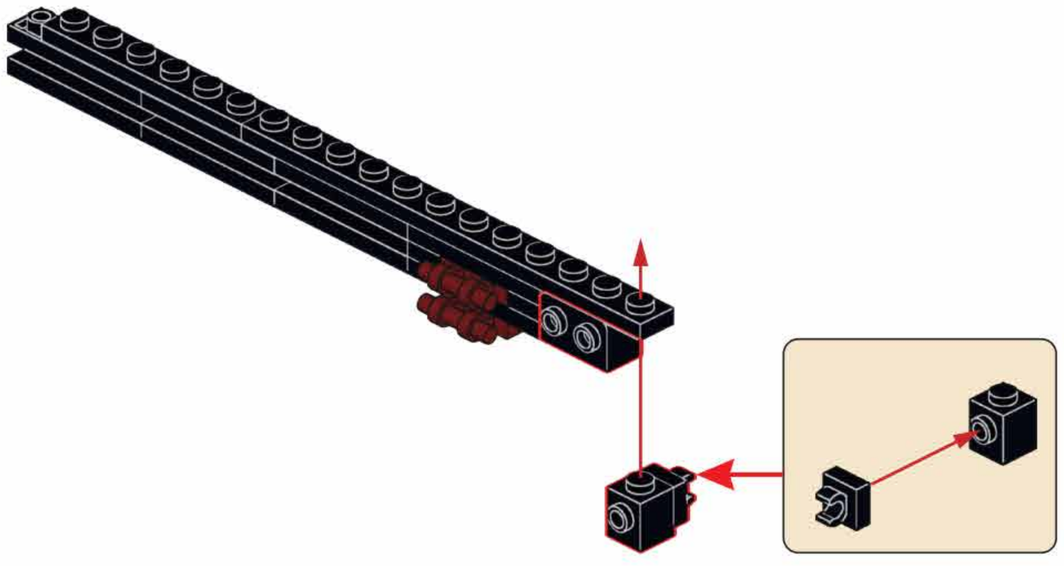

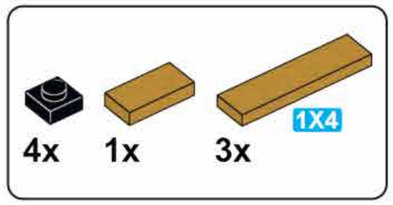

I22

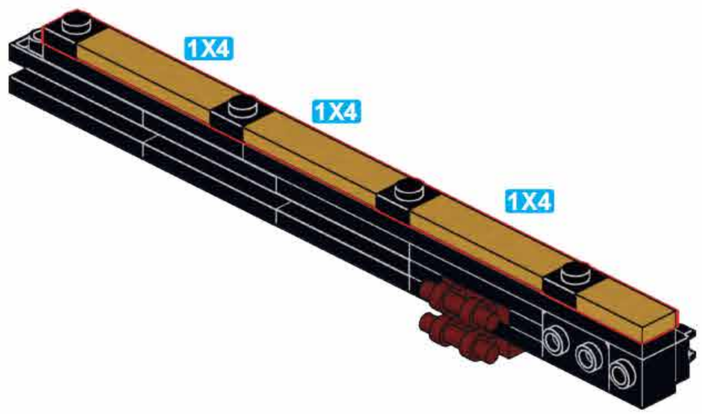

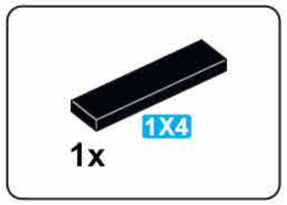

I23

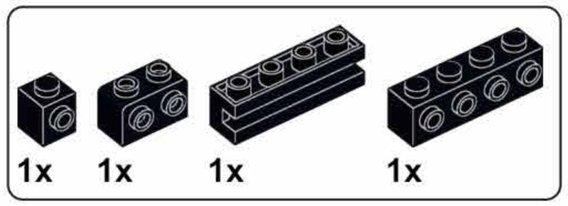

I24

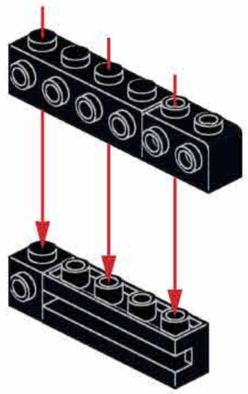

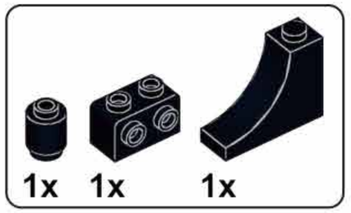

I25

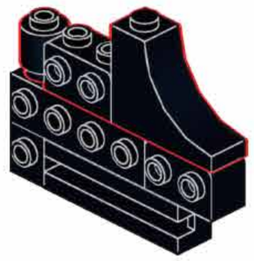

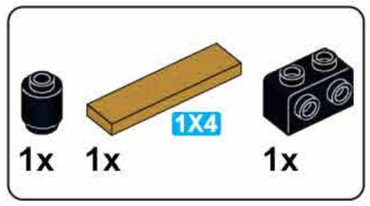

I26

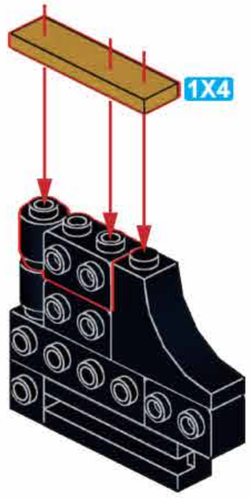

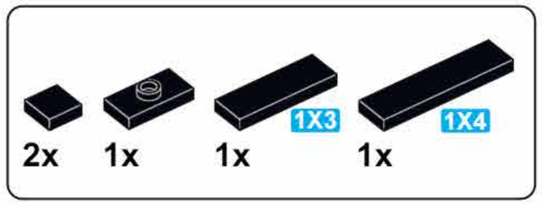

I27

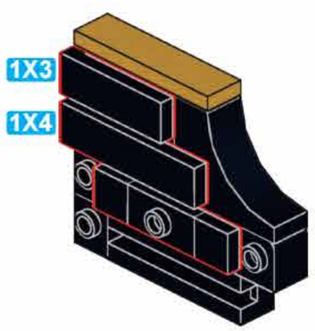

I28

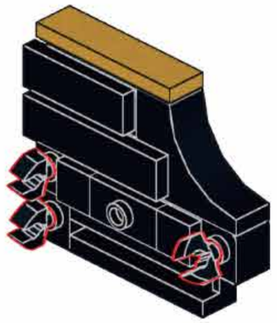

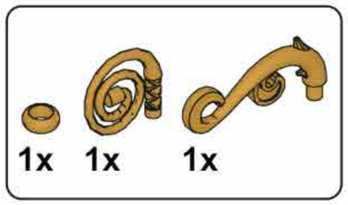

I29

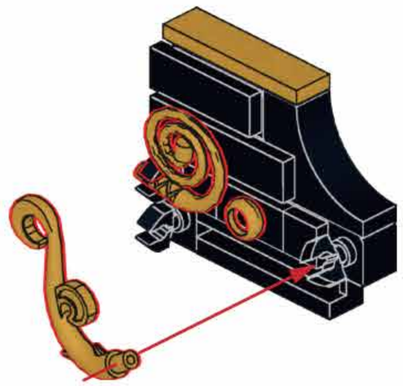

I30

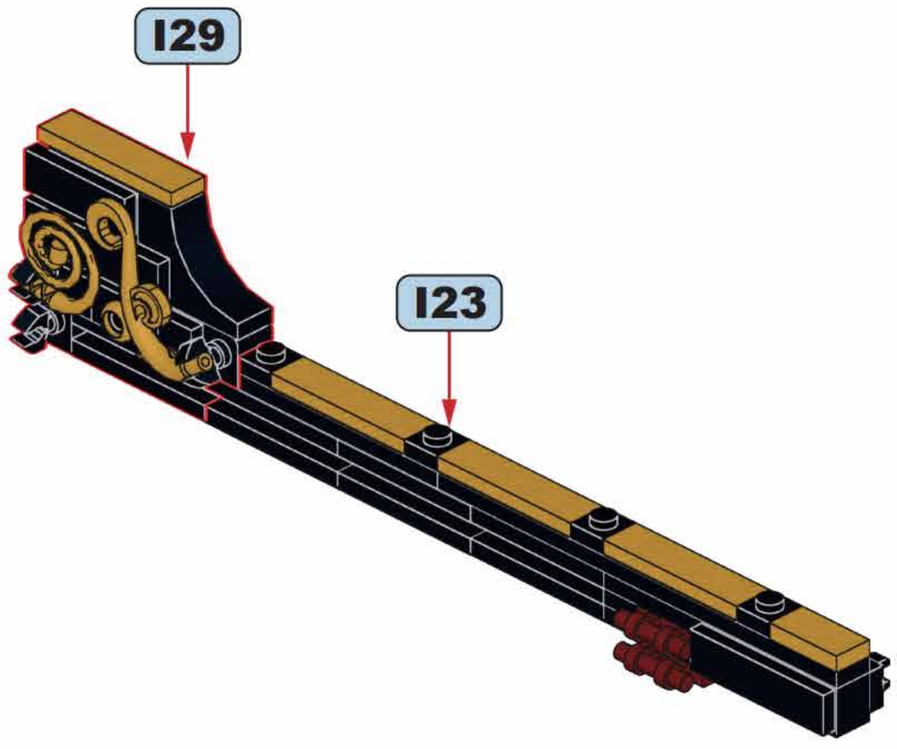

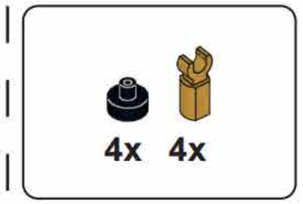

I31

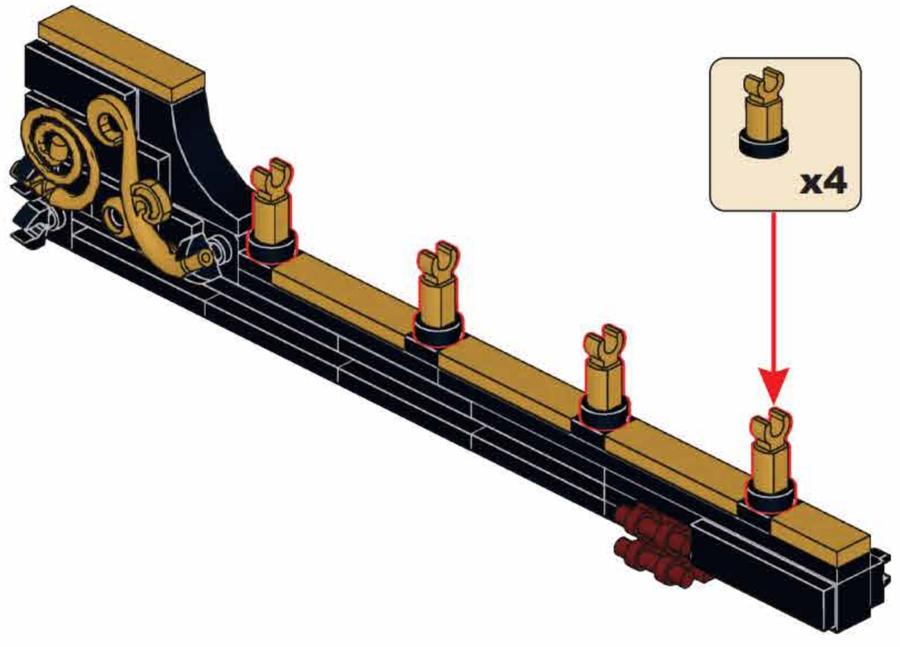

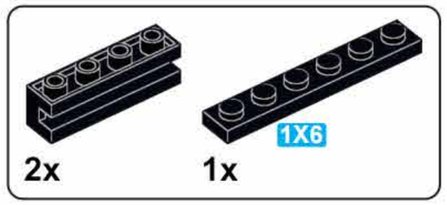

I32

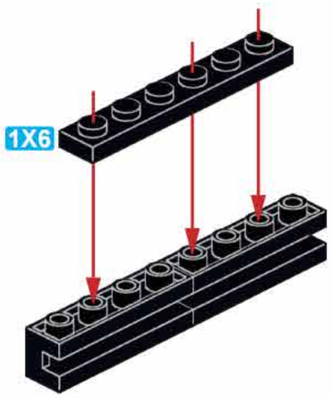

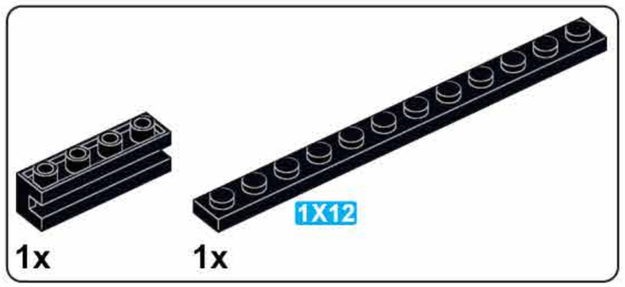

I33

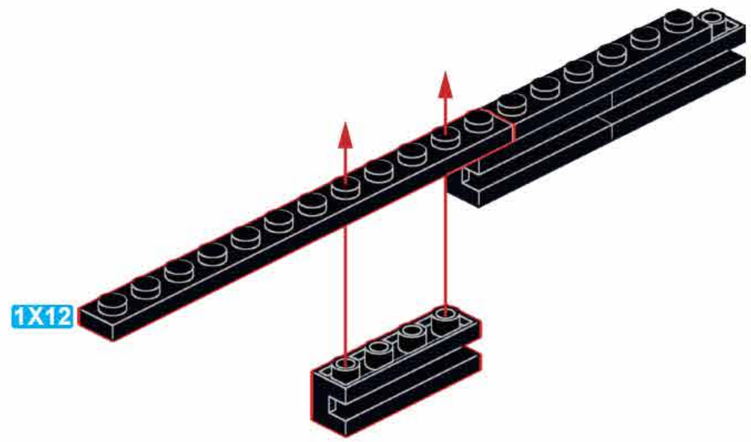

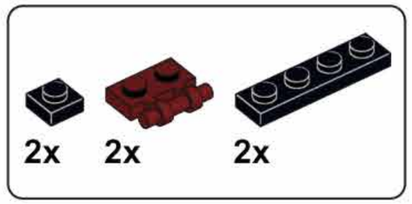

I34

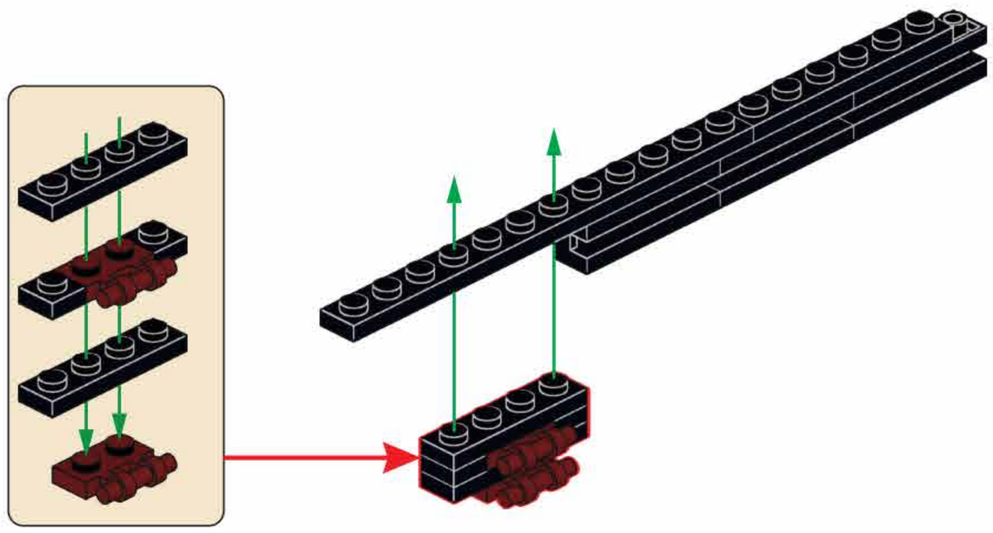

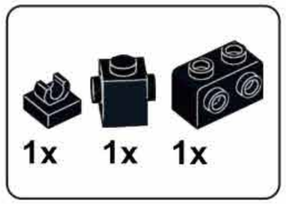

I35

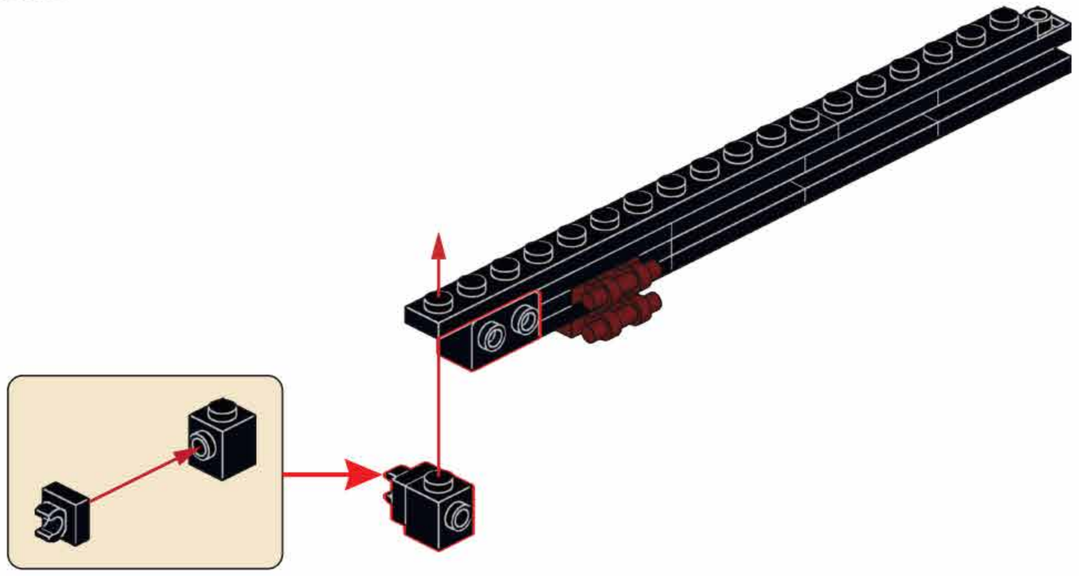

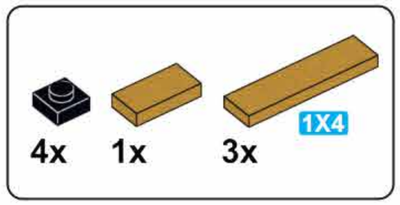

I36

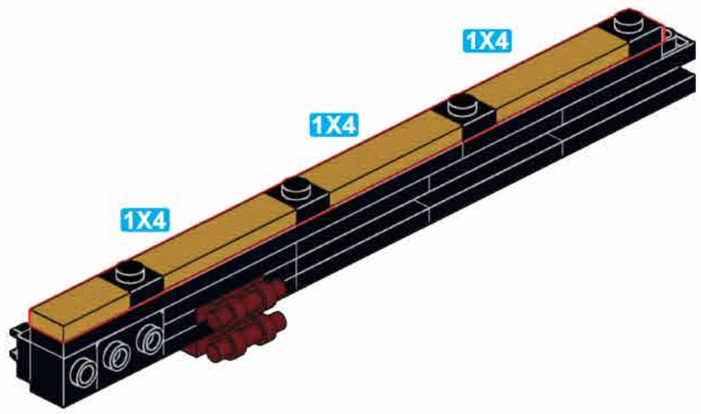

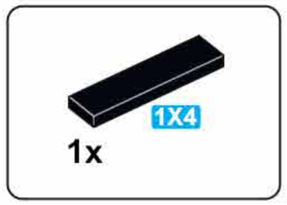

I37

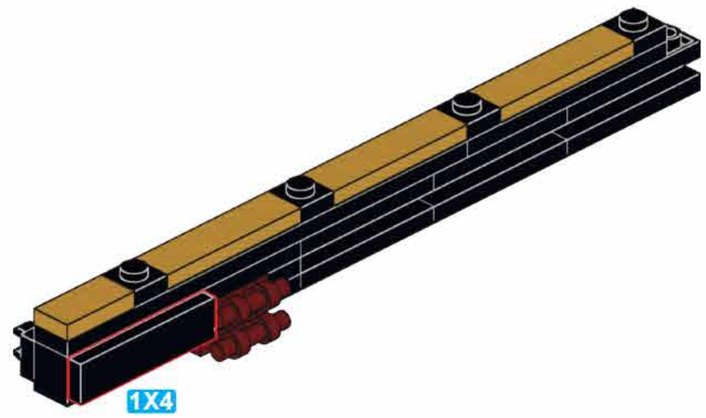

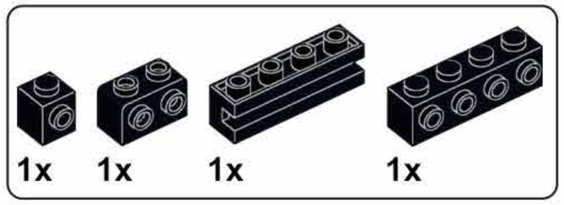

I38

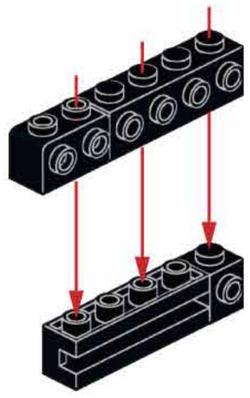

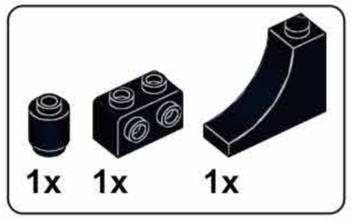

I39

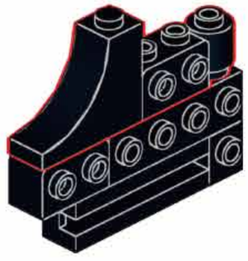

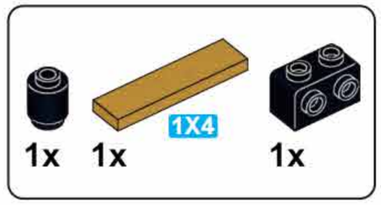

I40

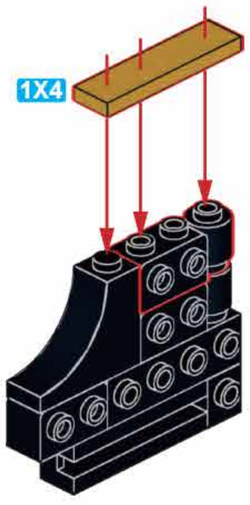

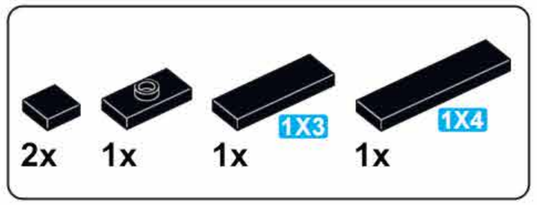

141

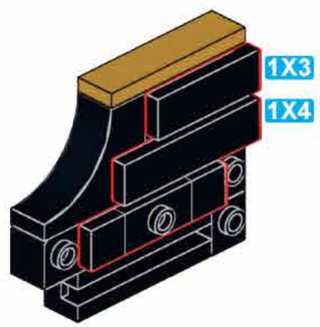

142

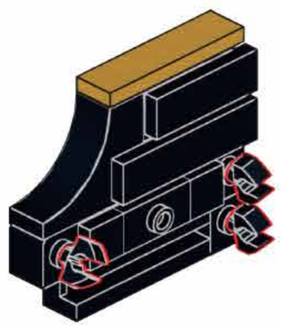

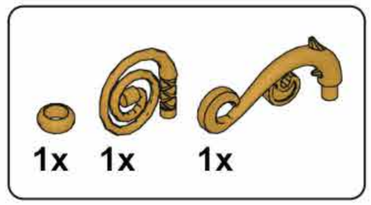

143

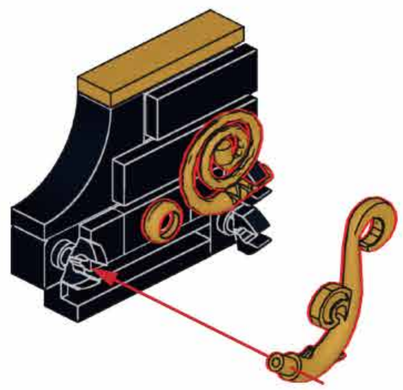

144

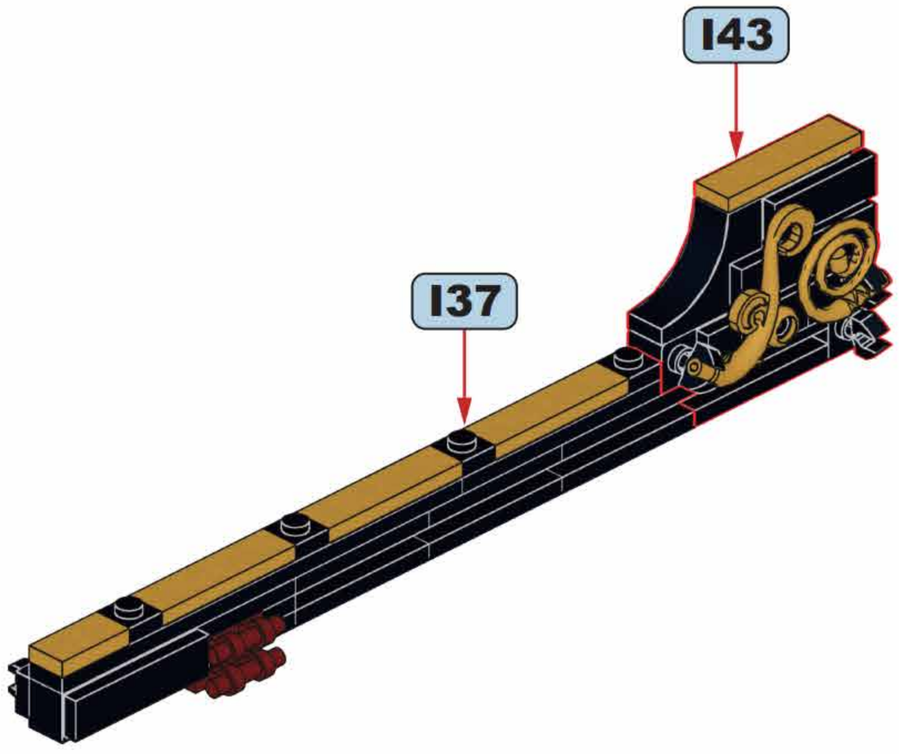

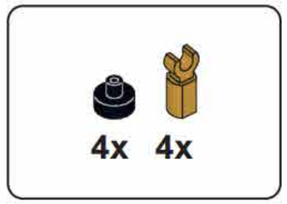

145

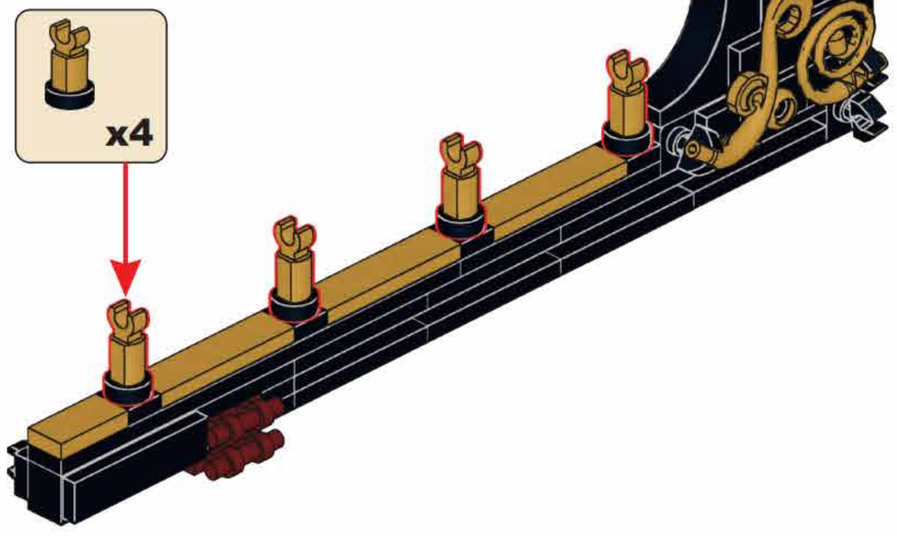

I46

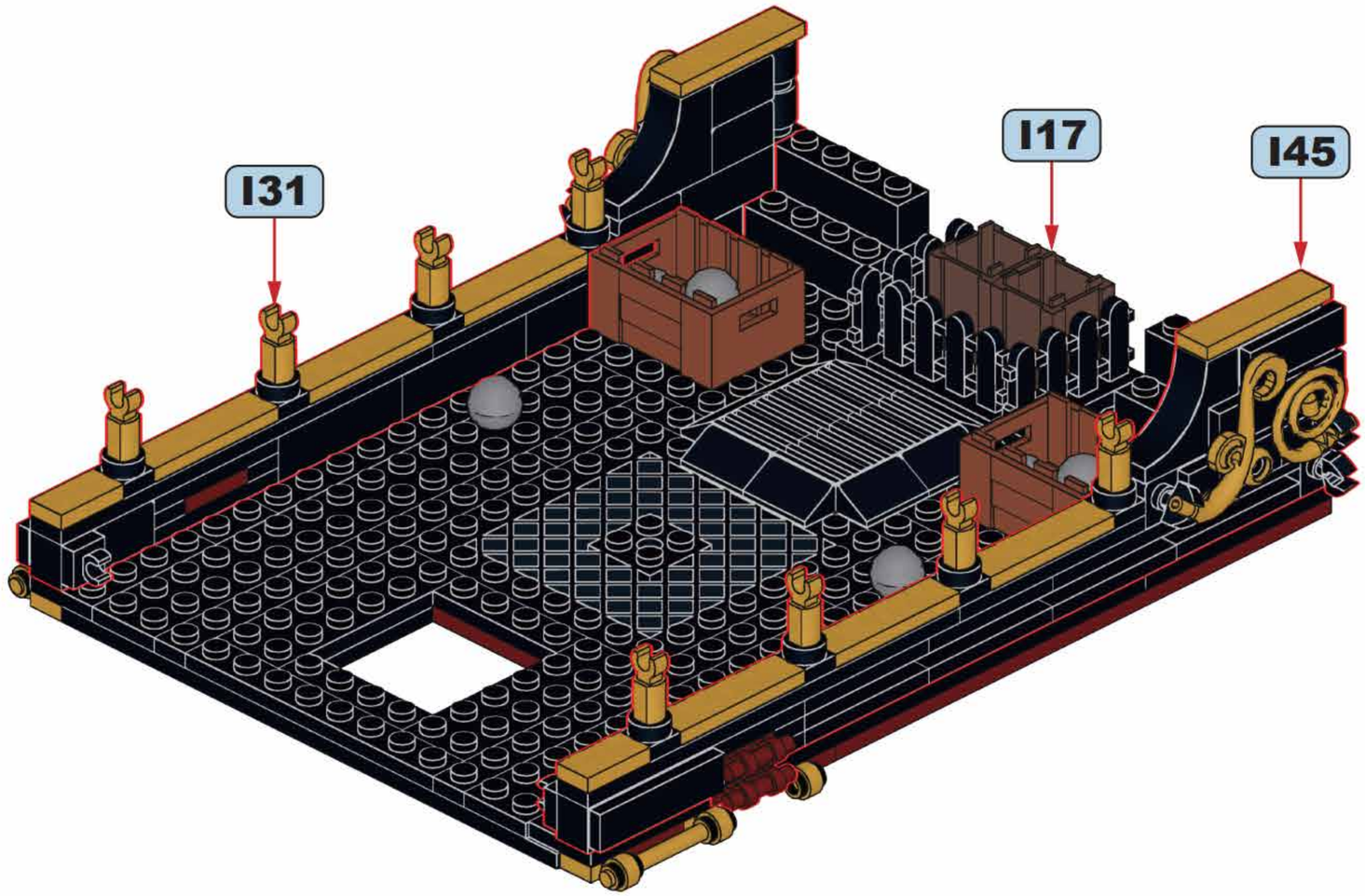

4x

I47

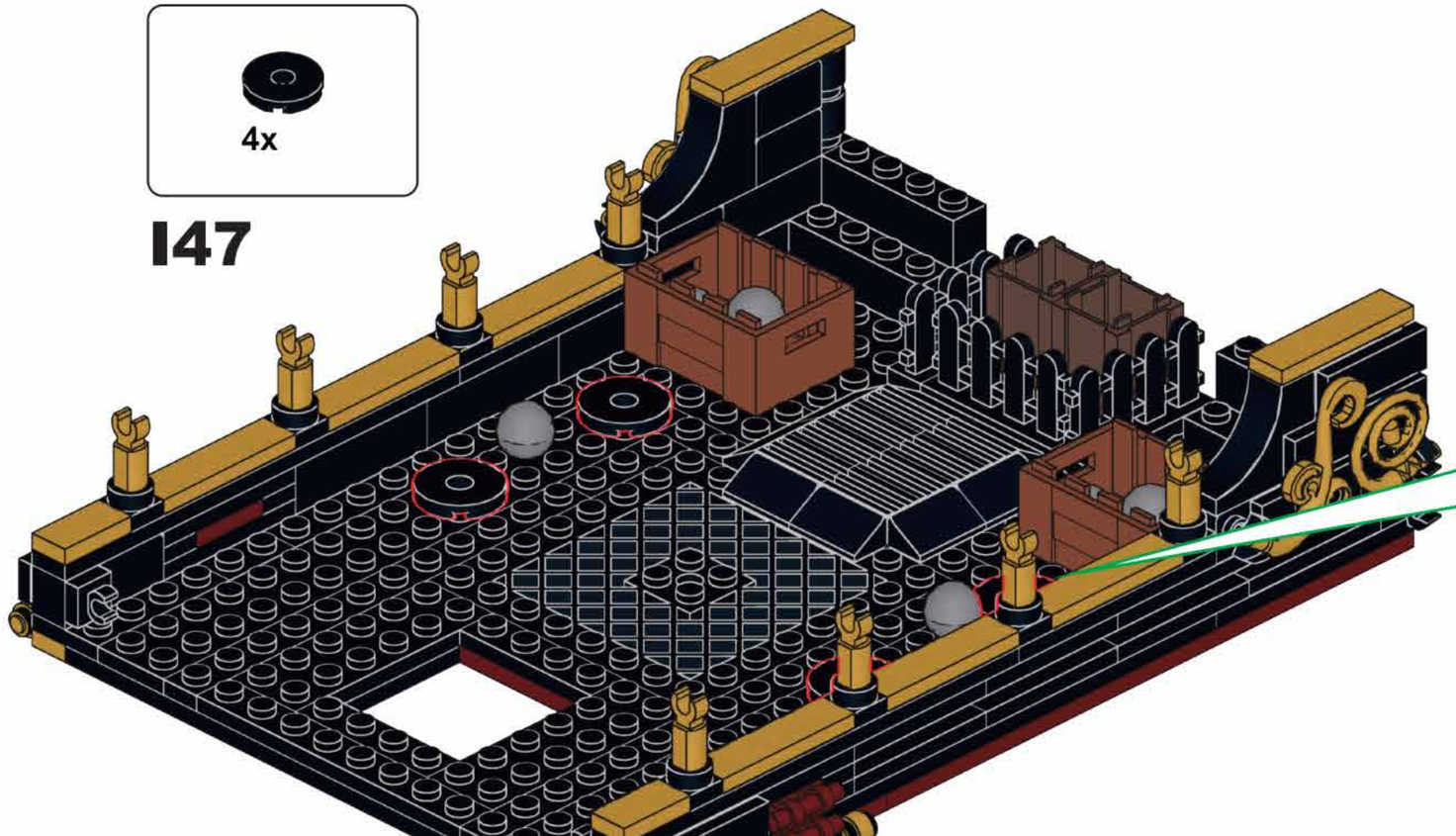

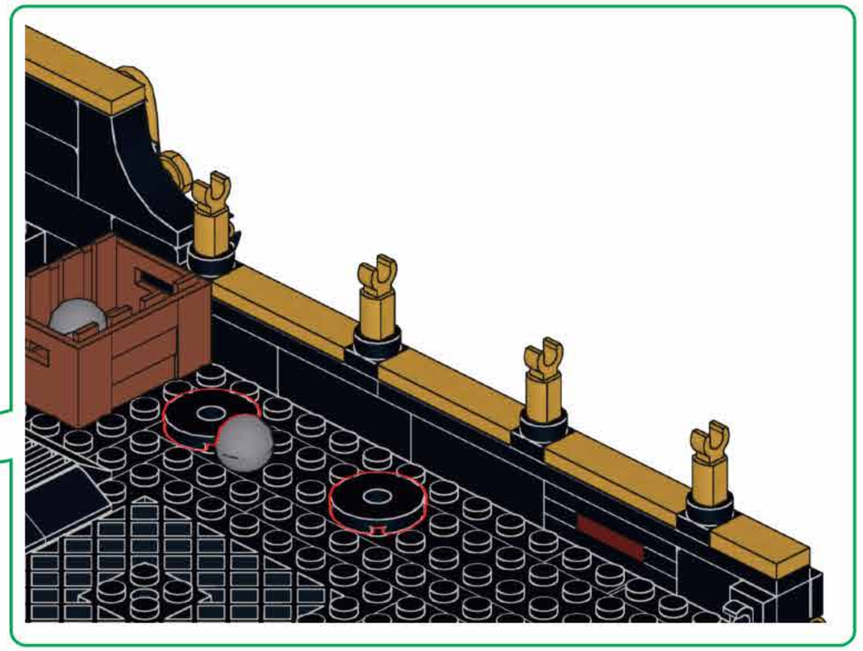

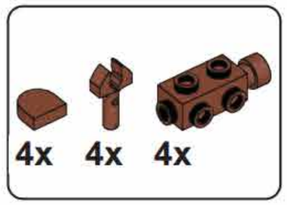

148

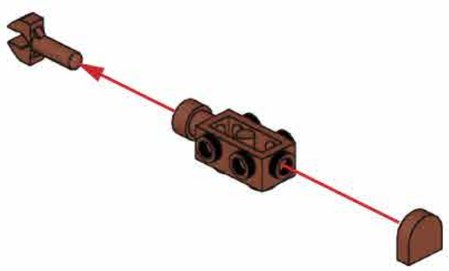

x4

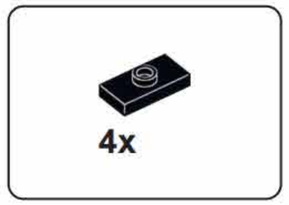

149

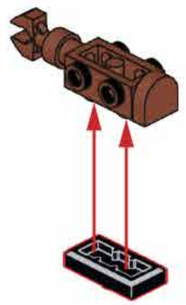

x4

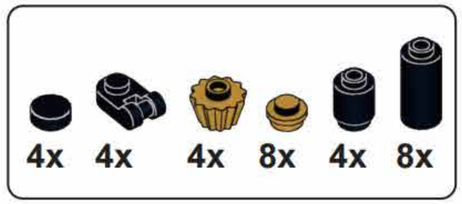

150

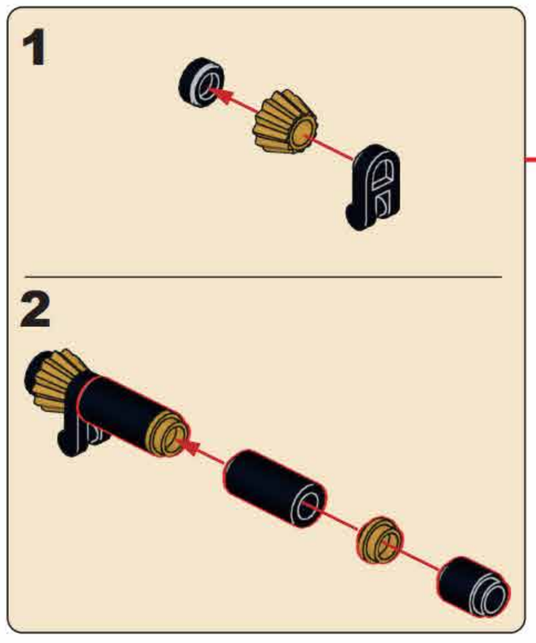

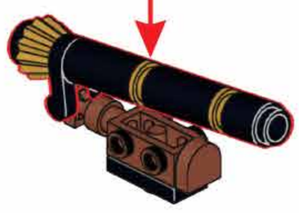

x4

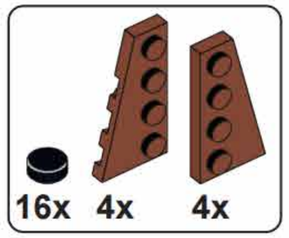

151

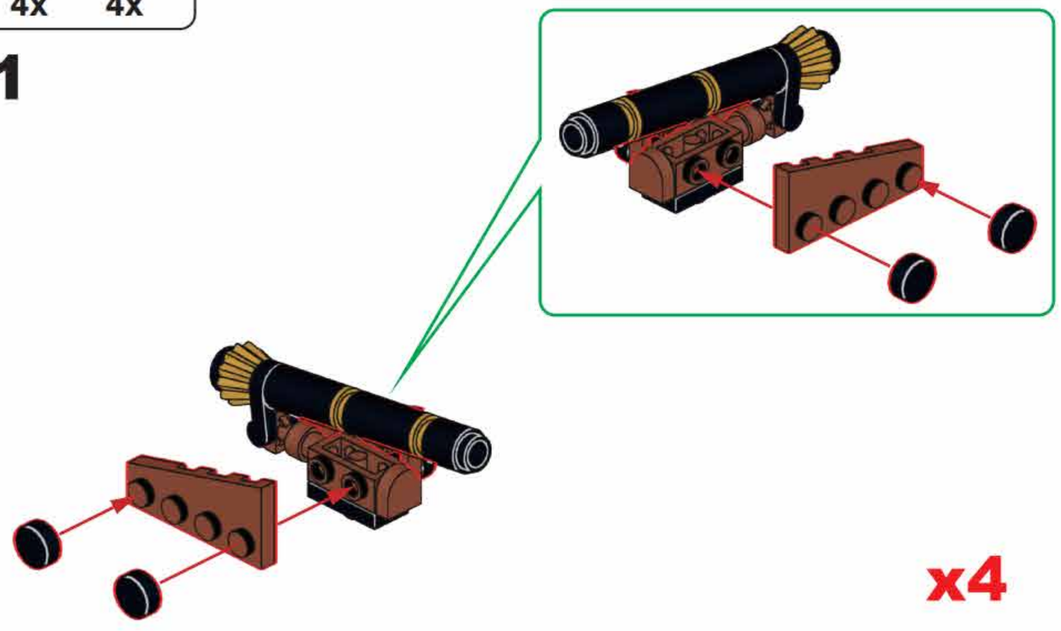

x4

I52

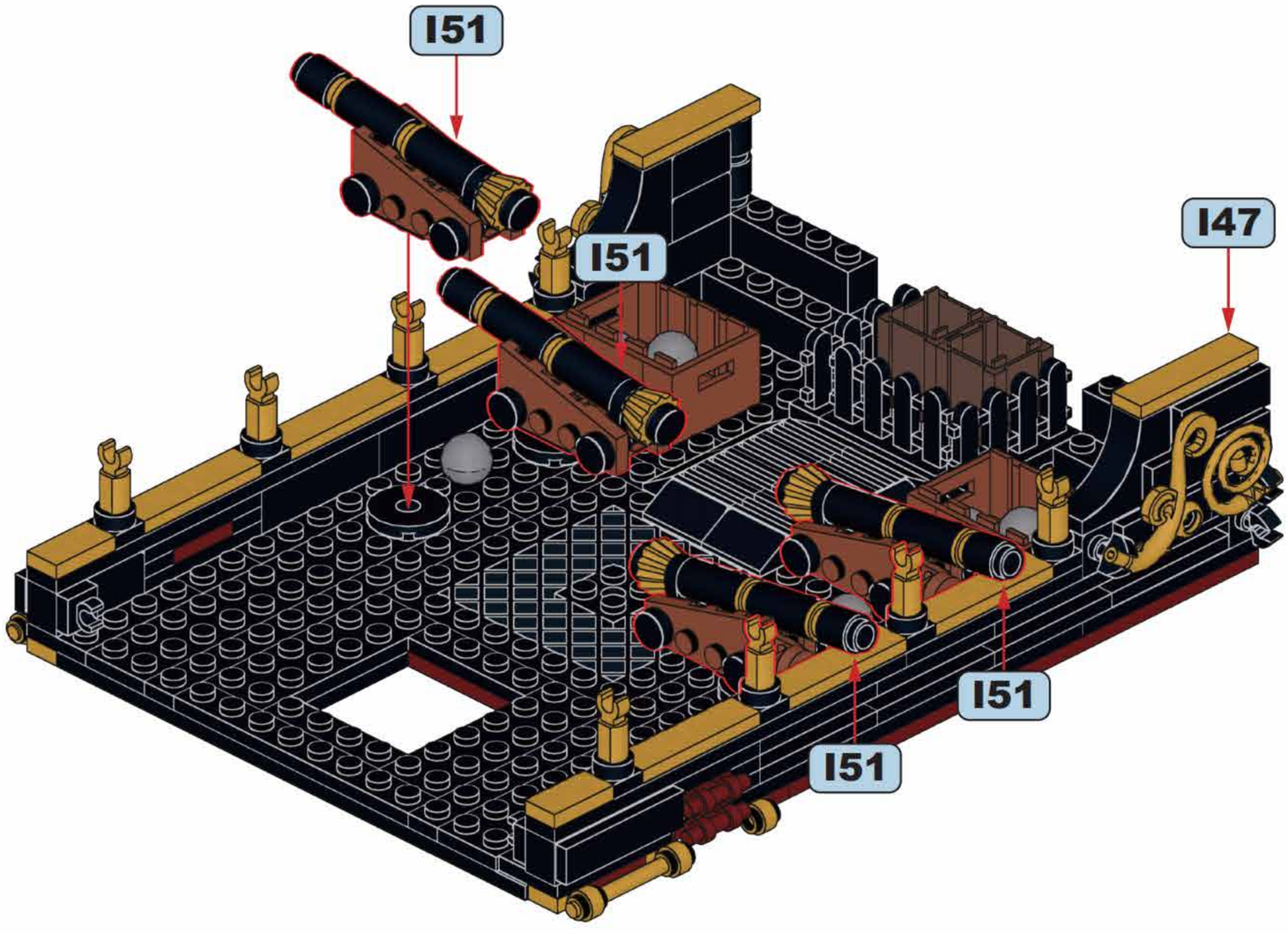

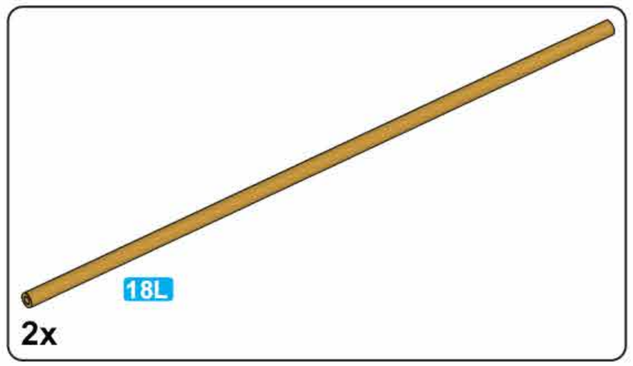

I53

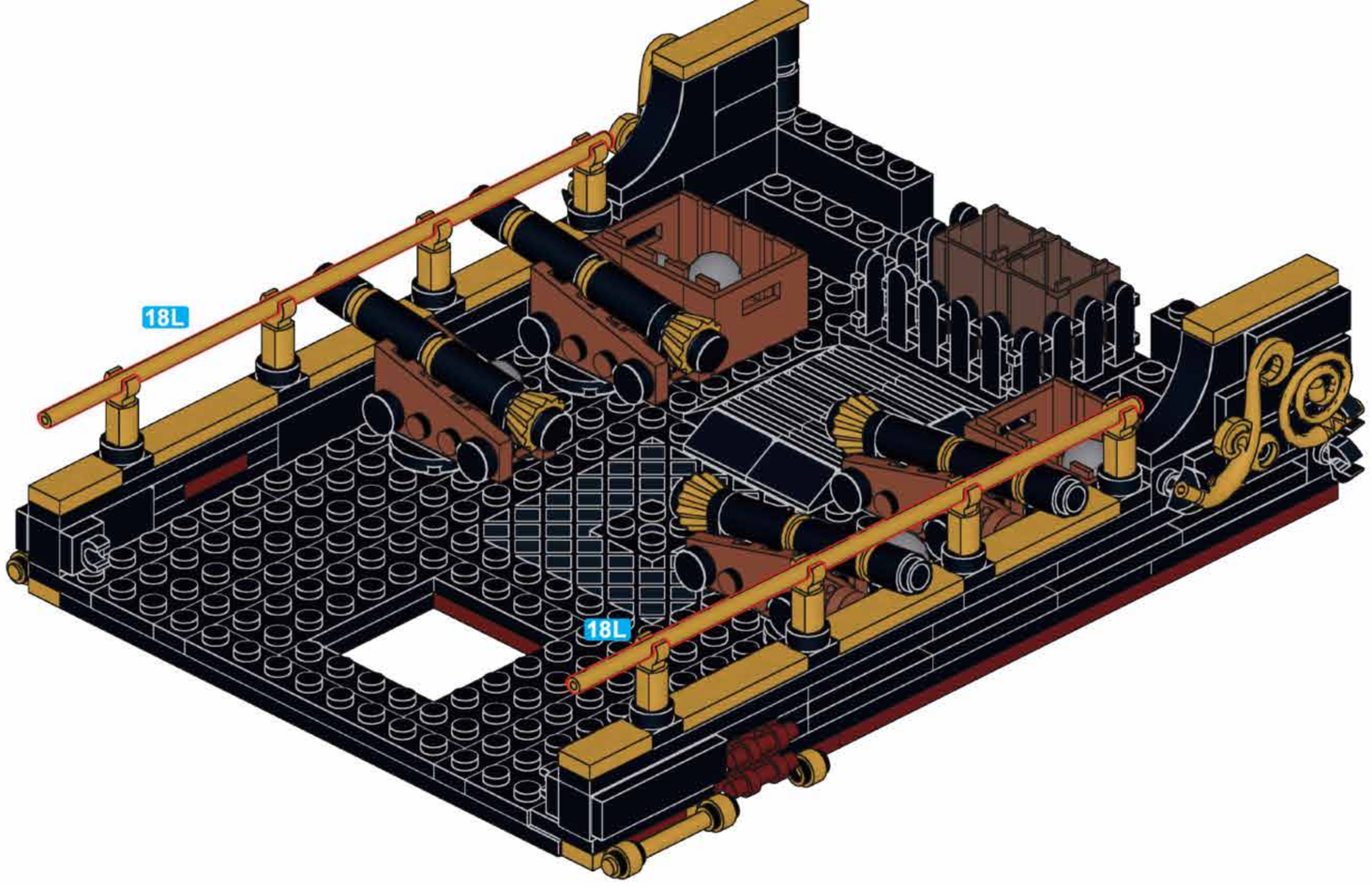

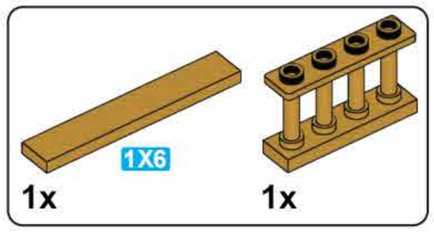

I54

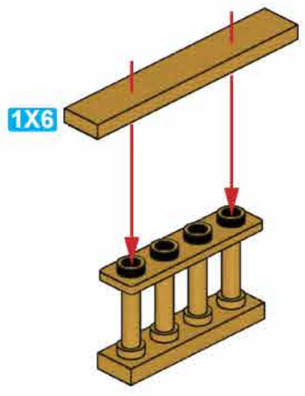

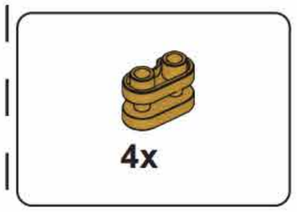

I55

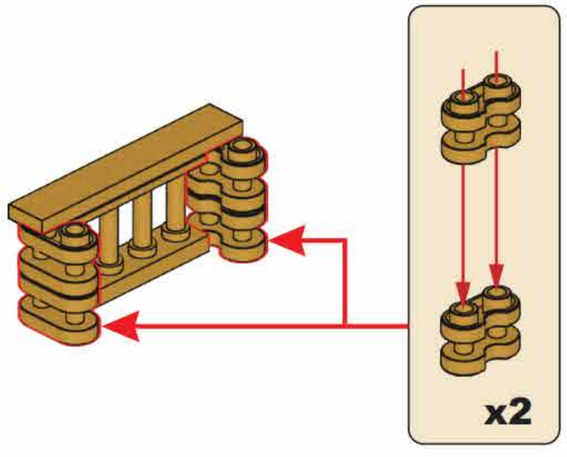

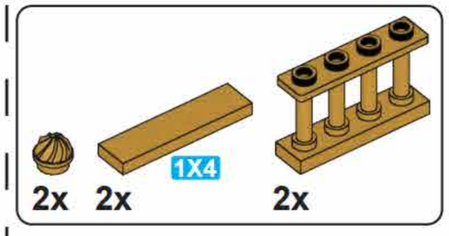

I56

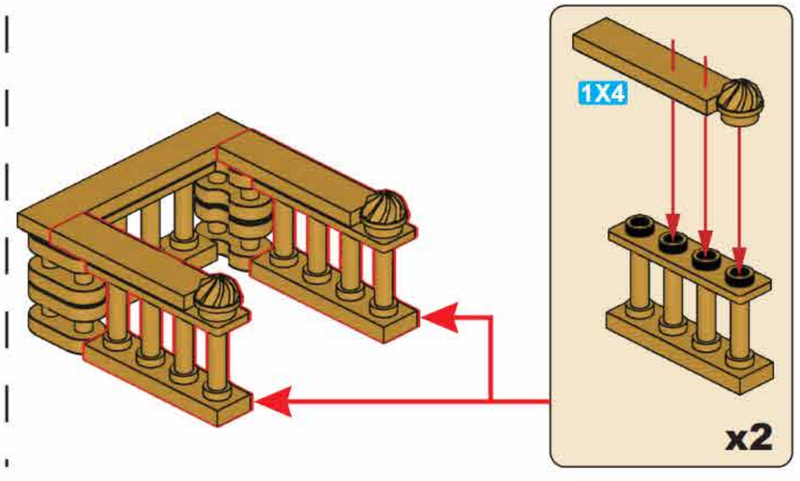

157

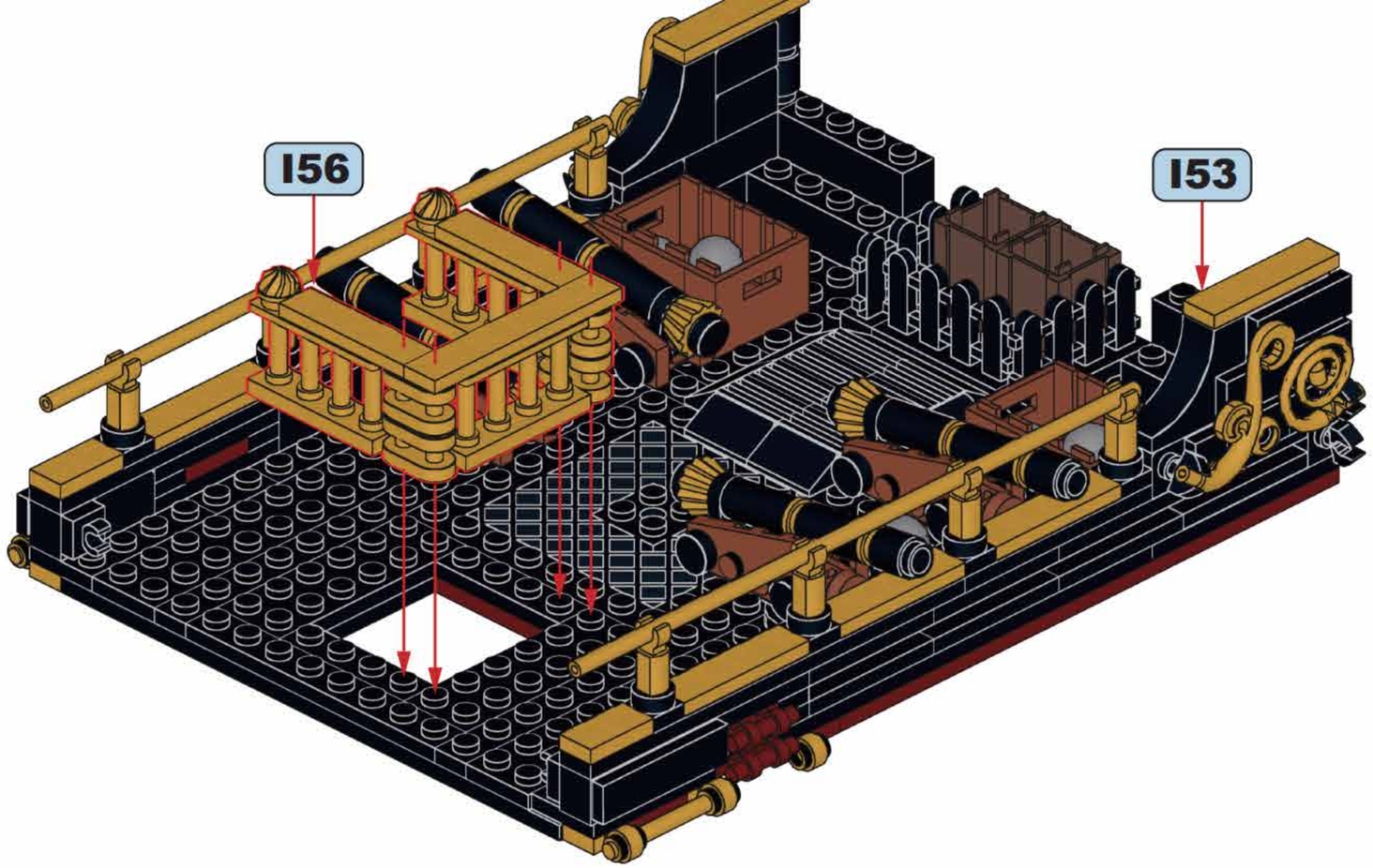

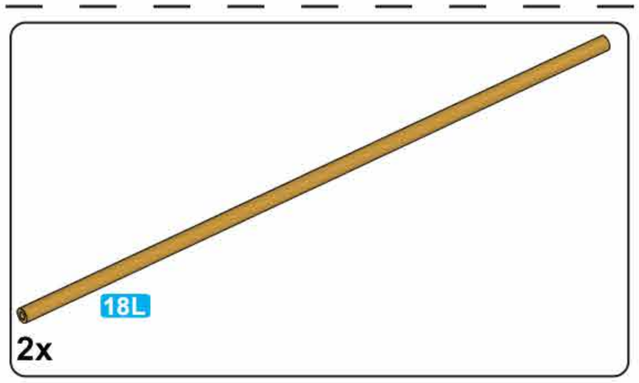

158

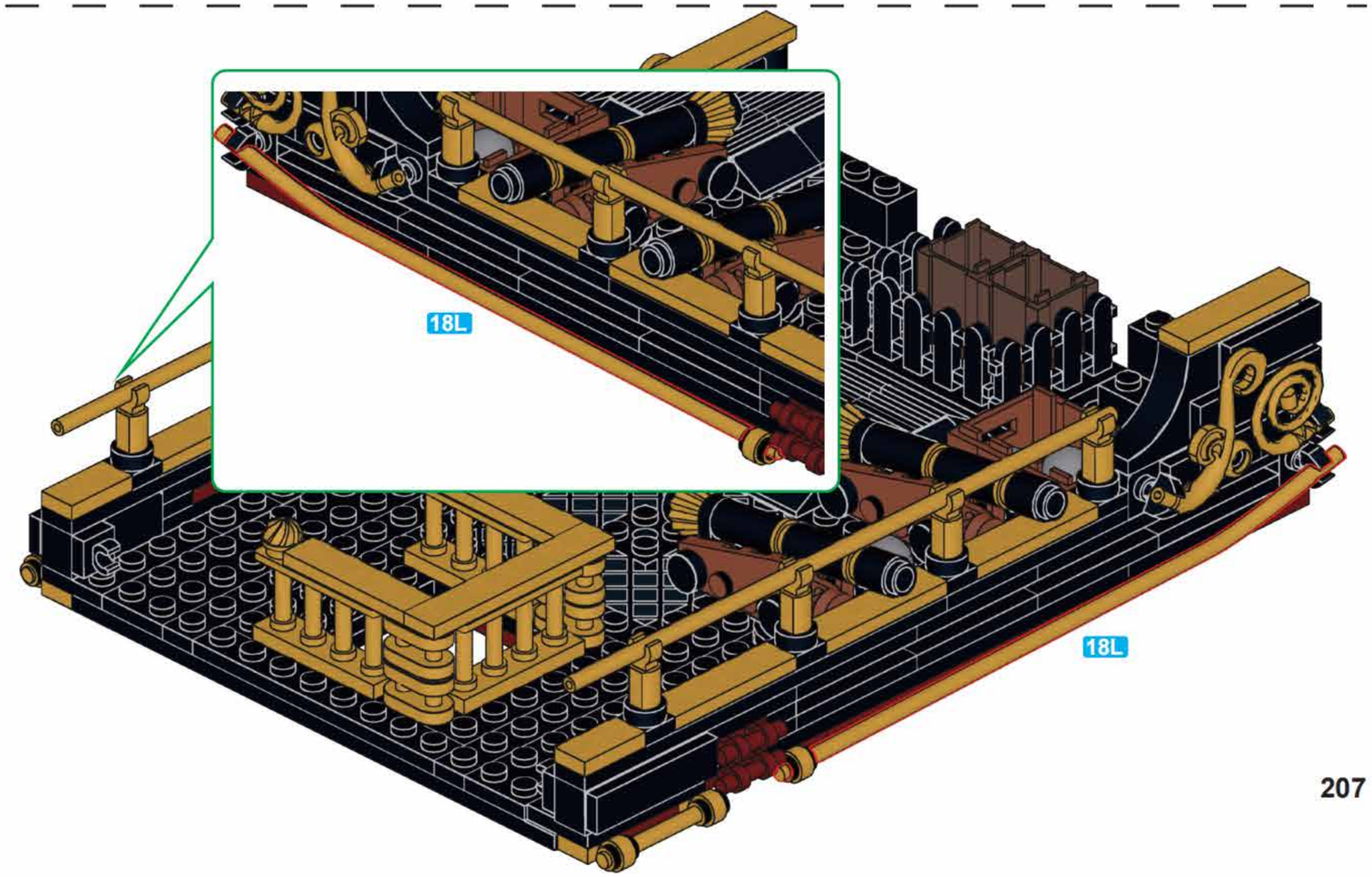

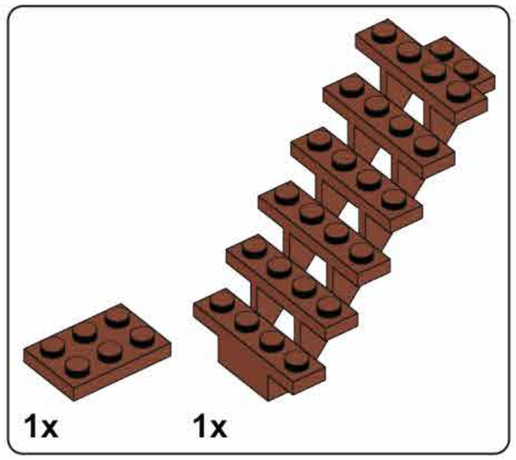

I59

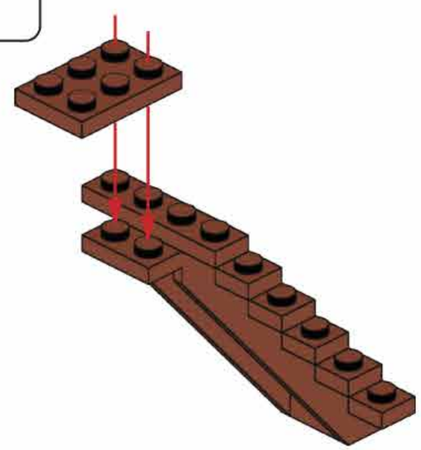

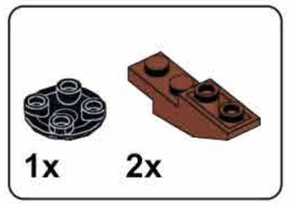

I60

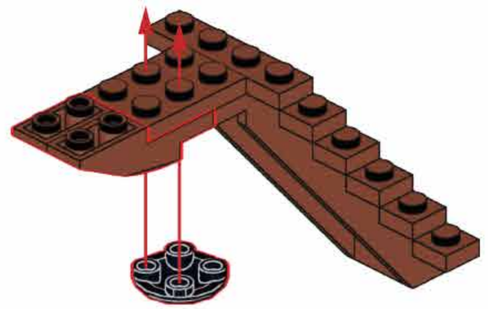

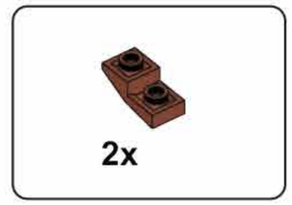

I61

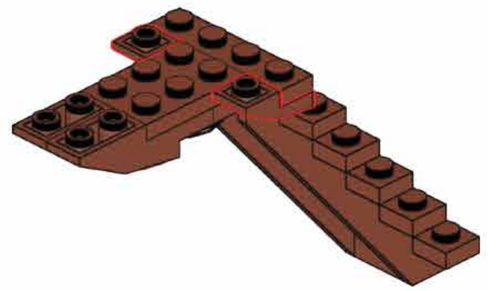

I62

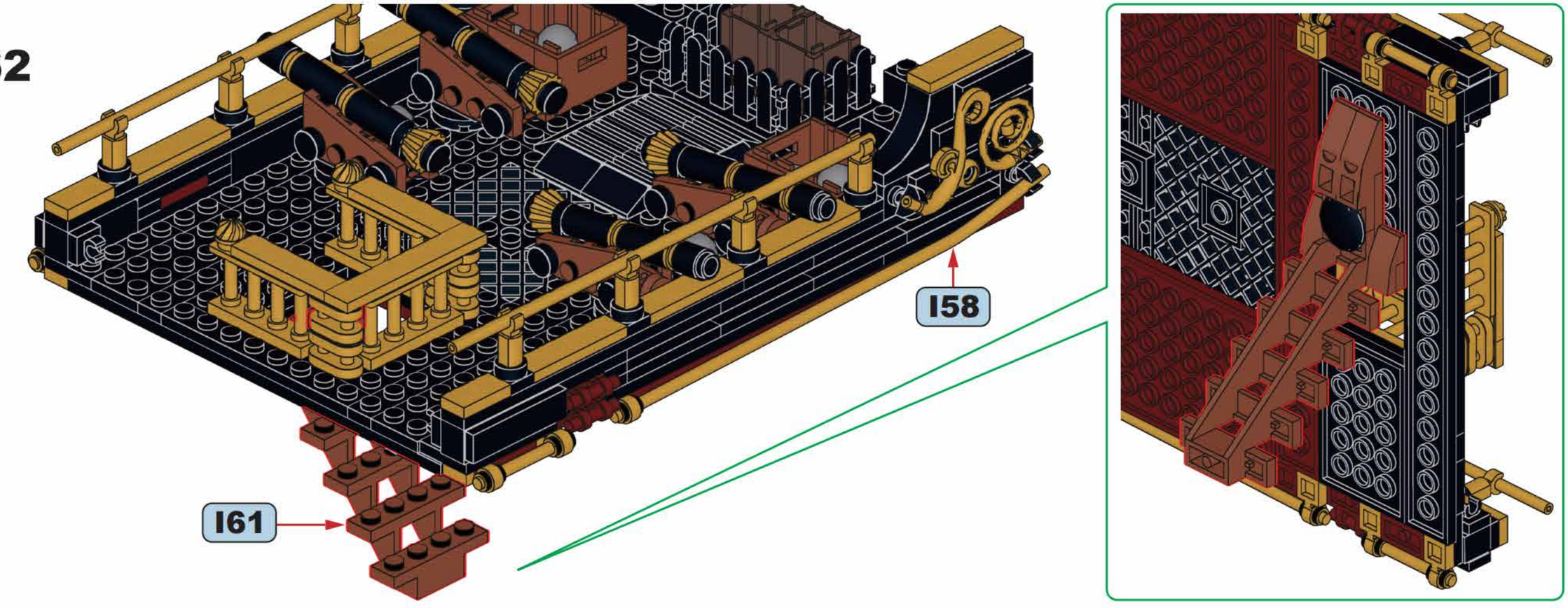

I63

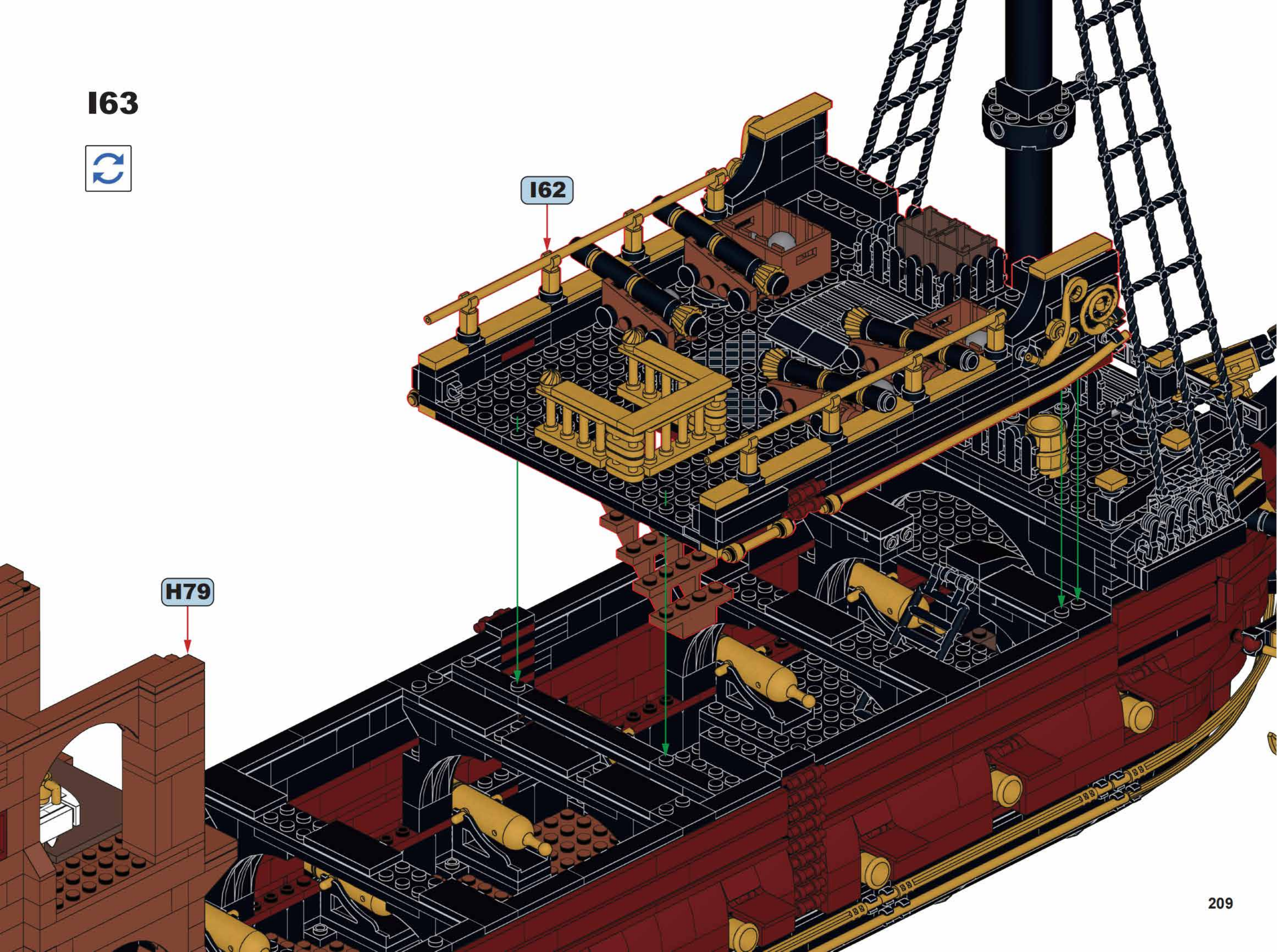

10

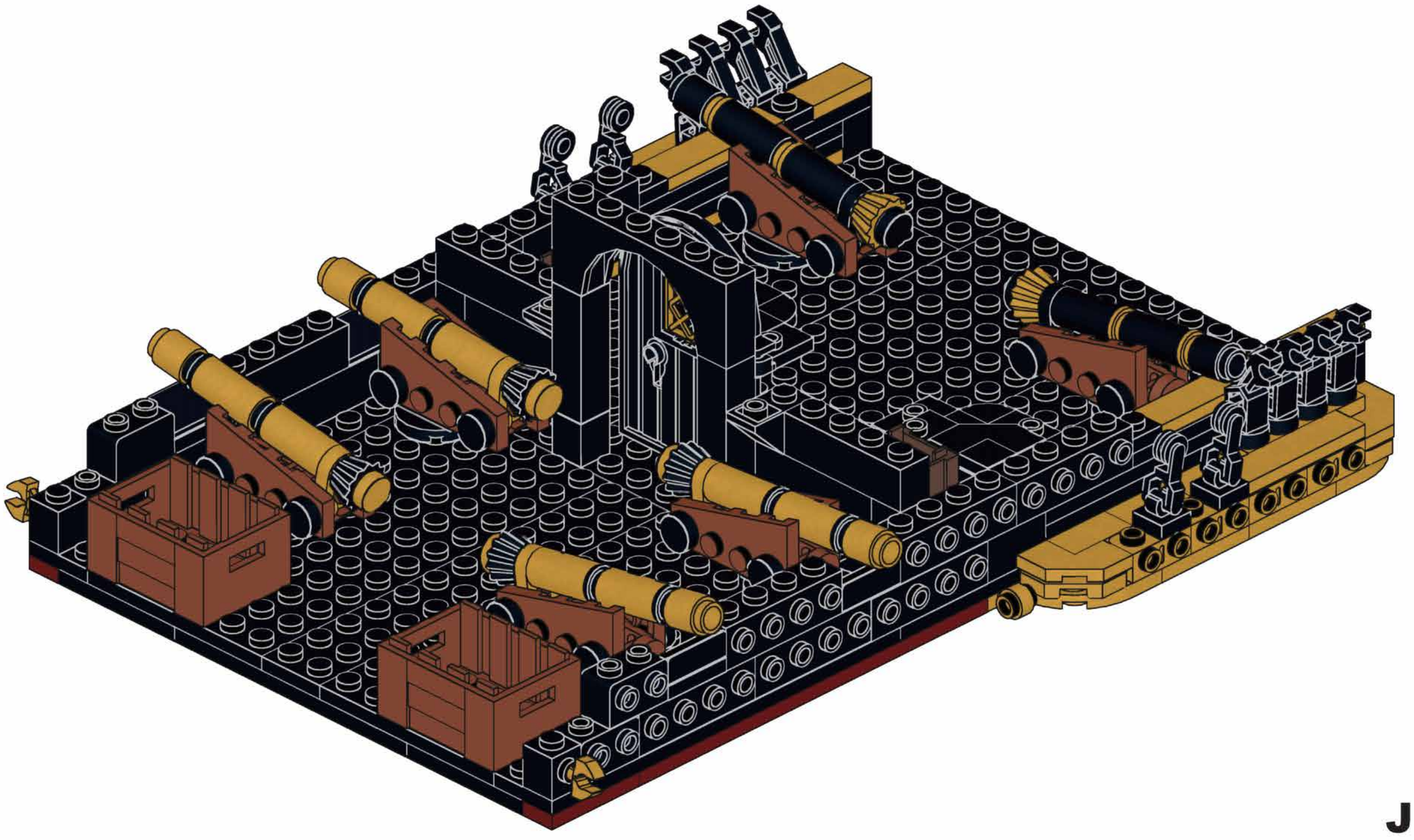

J

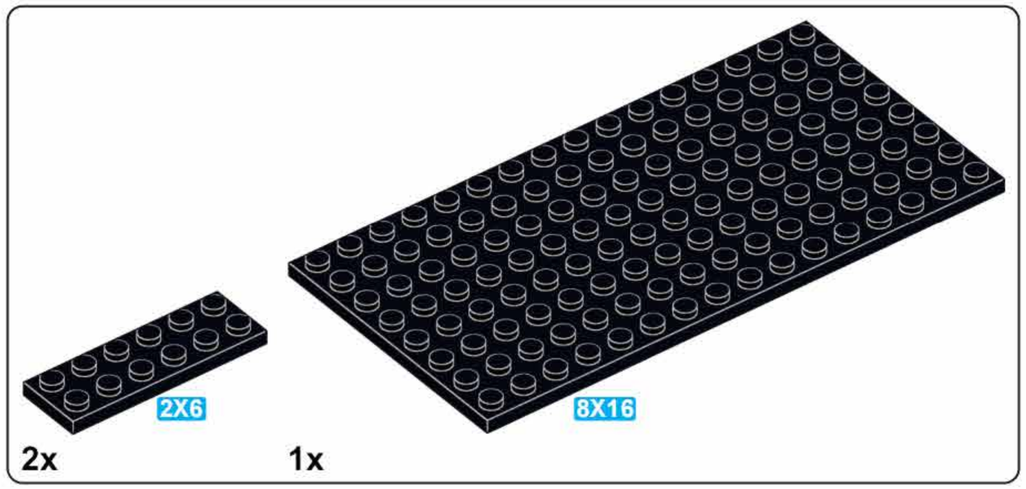

J1

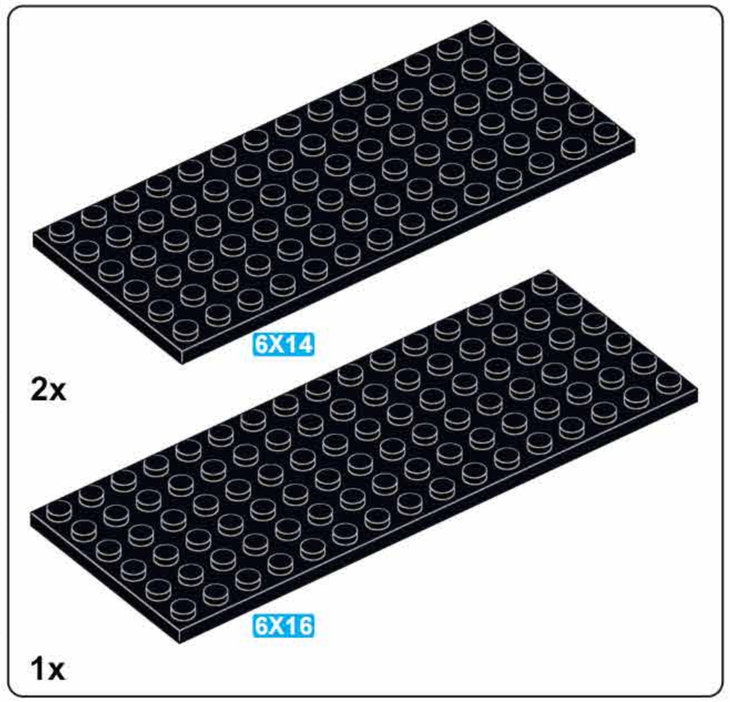

J2

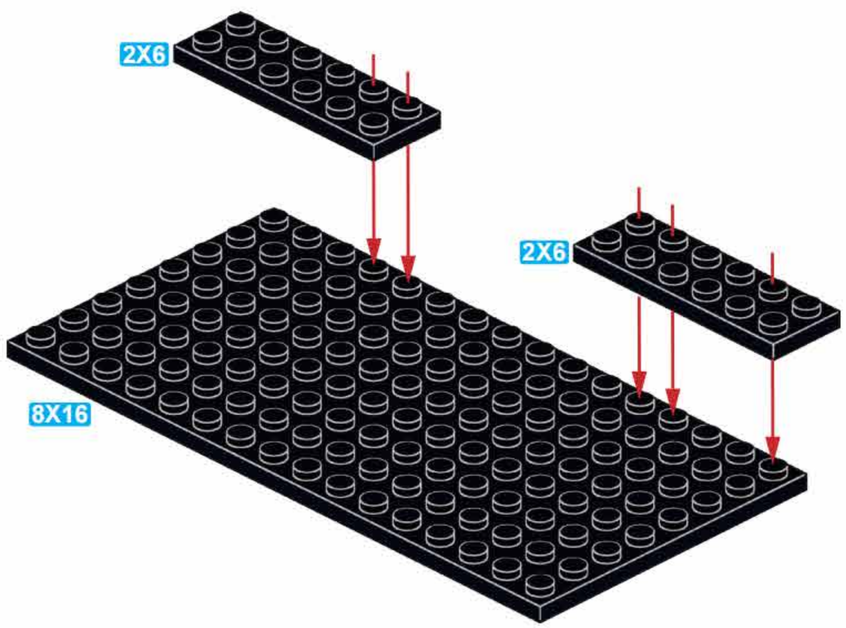

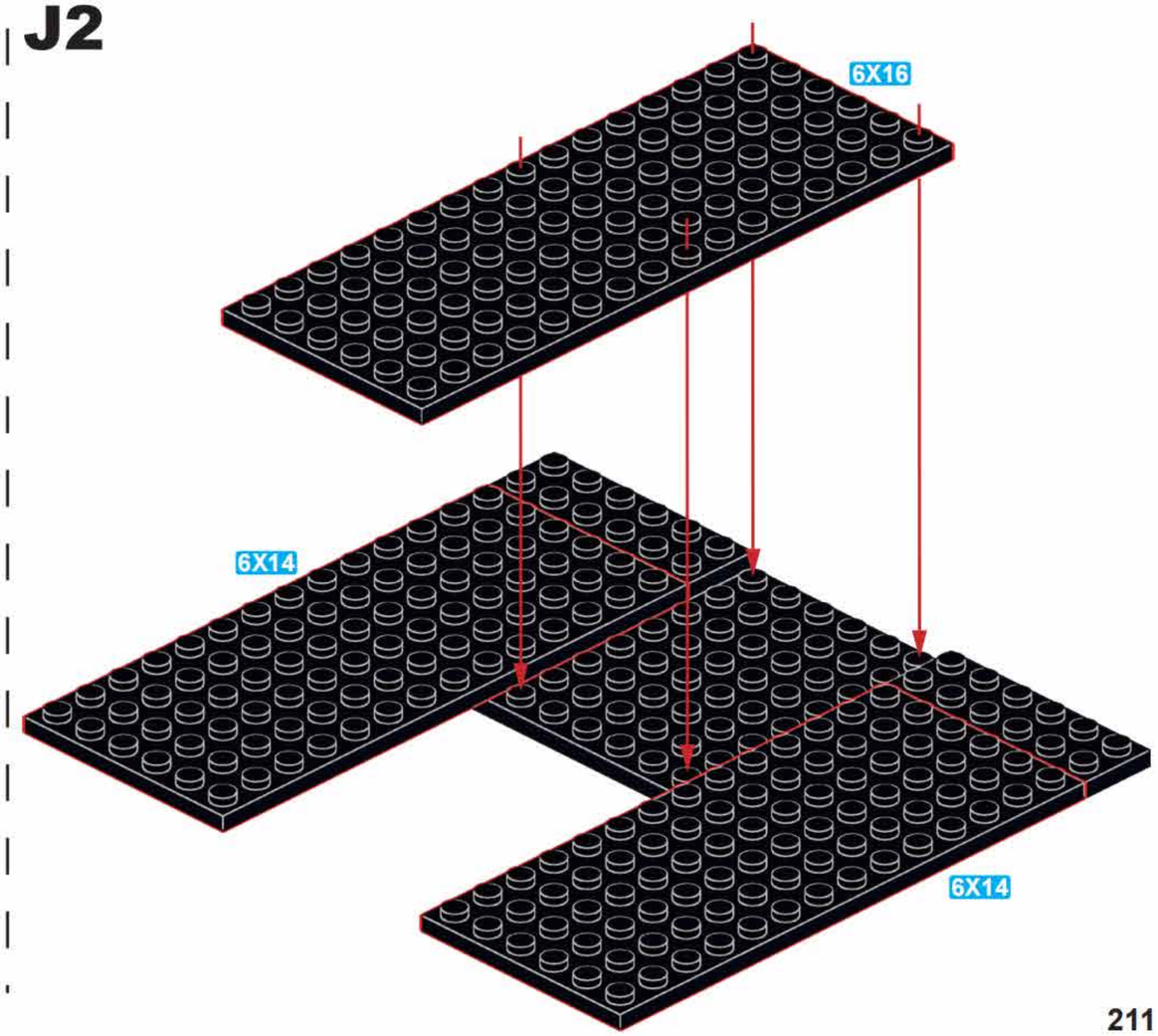

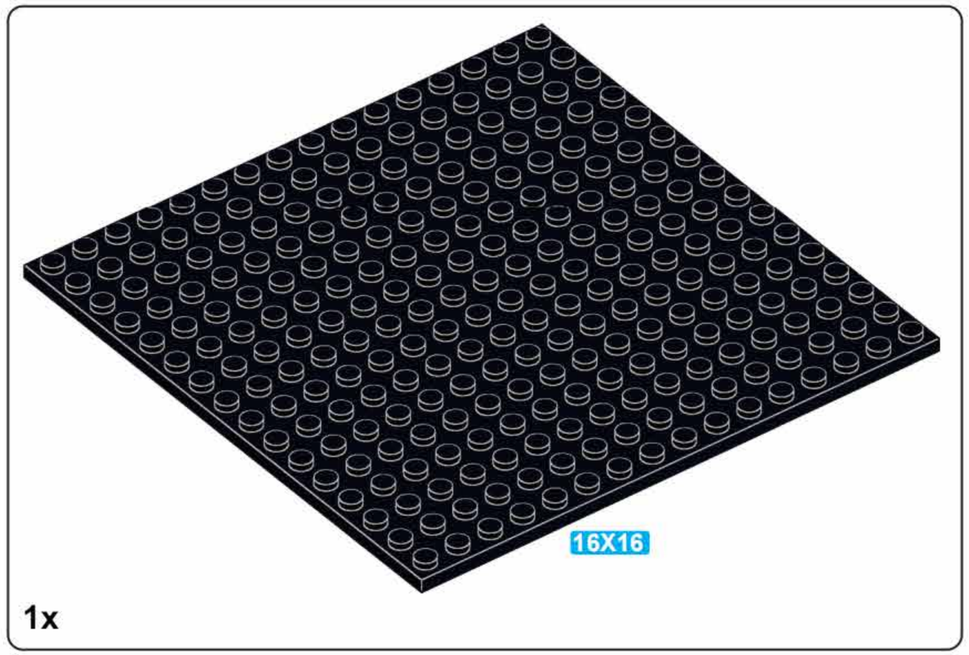

1x

J3

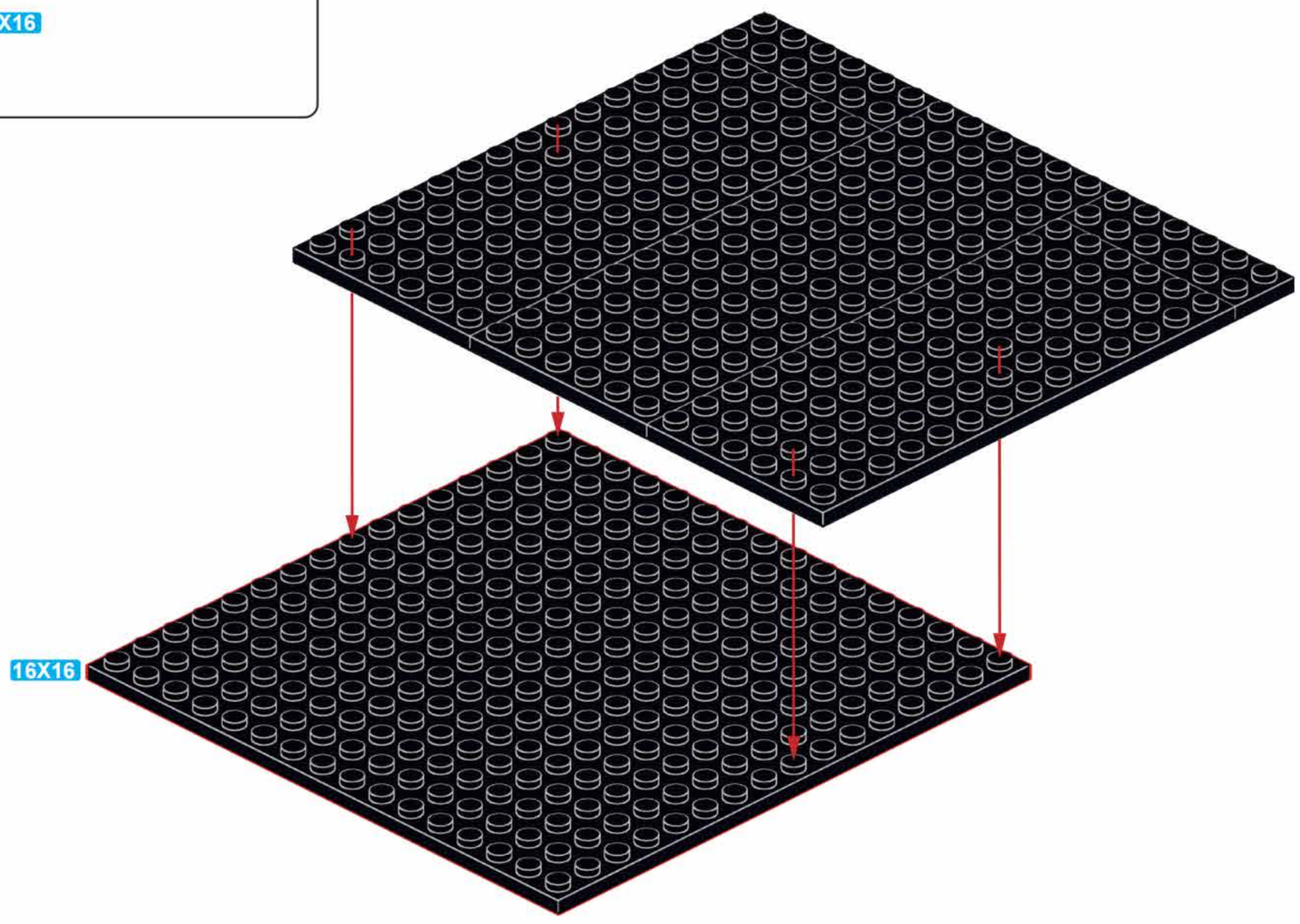

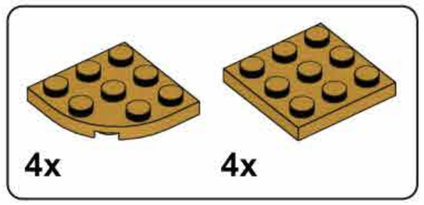

J4

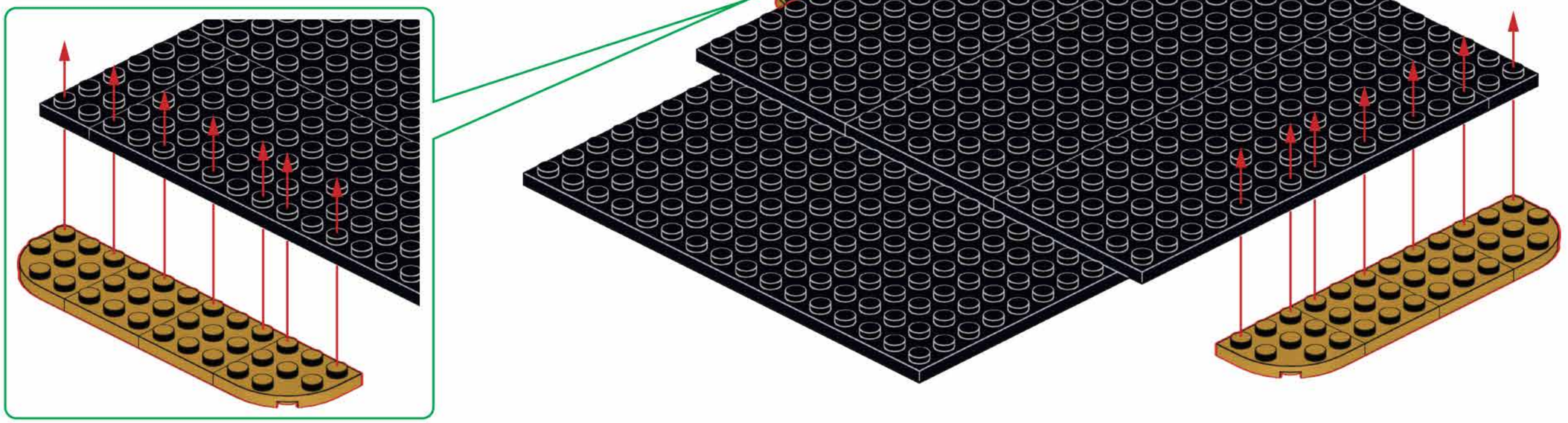

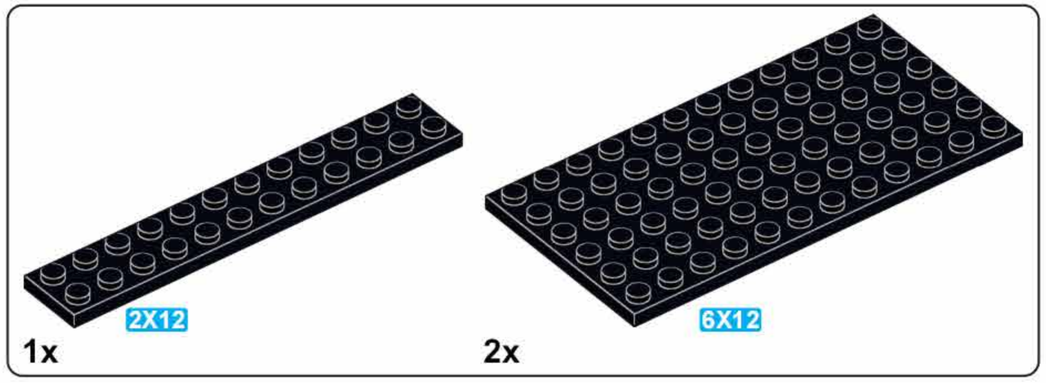

J5

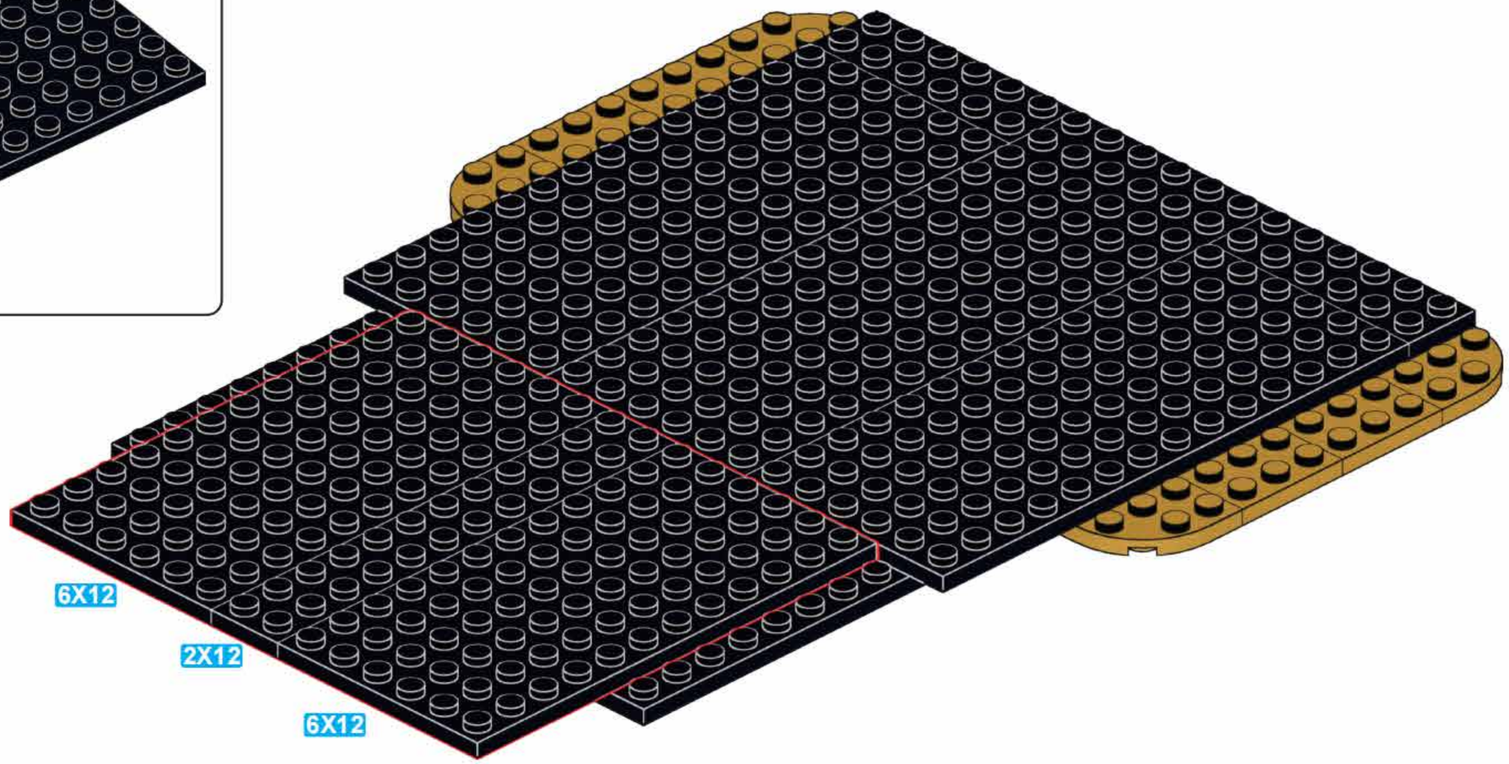

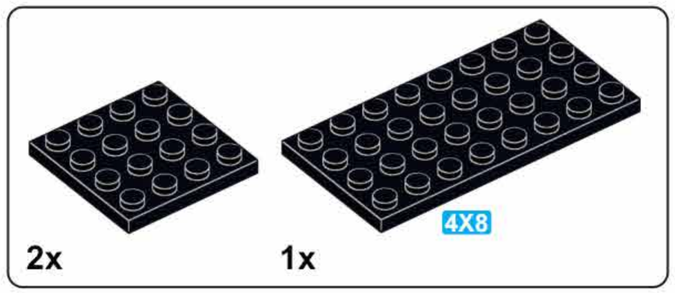

J6

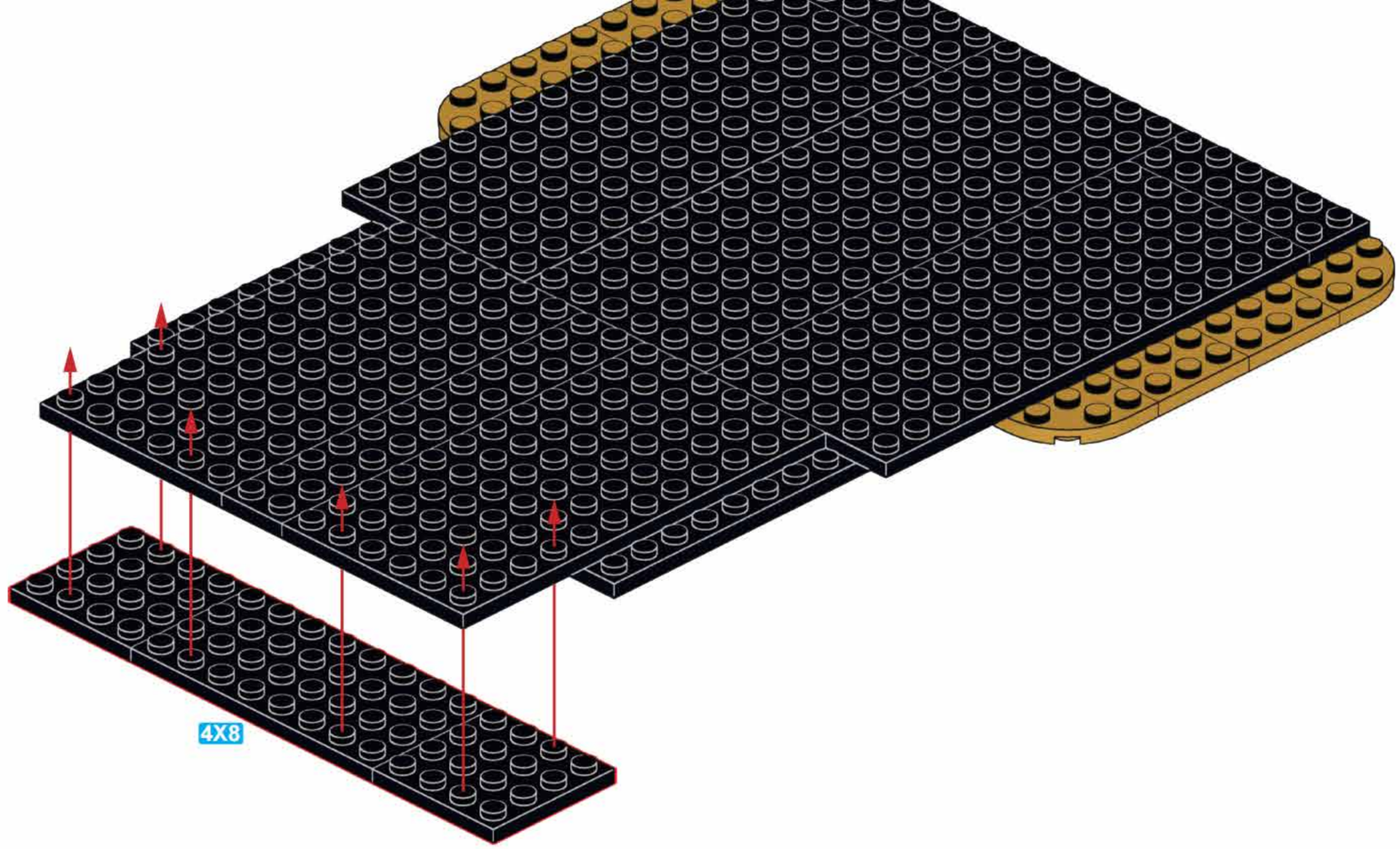

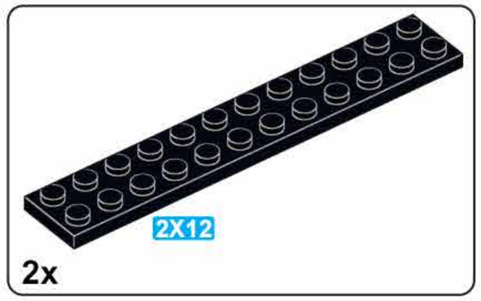

J7

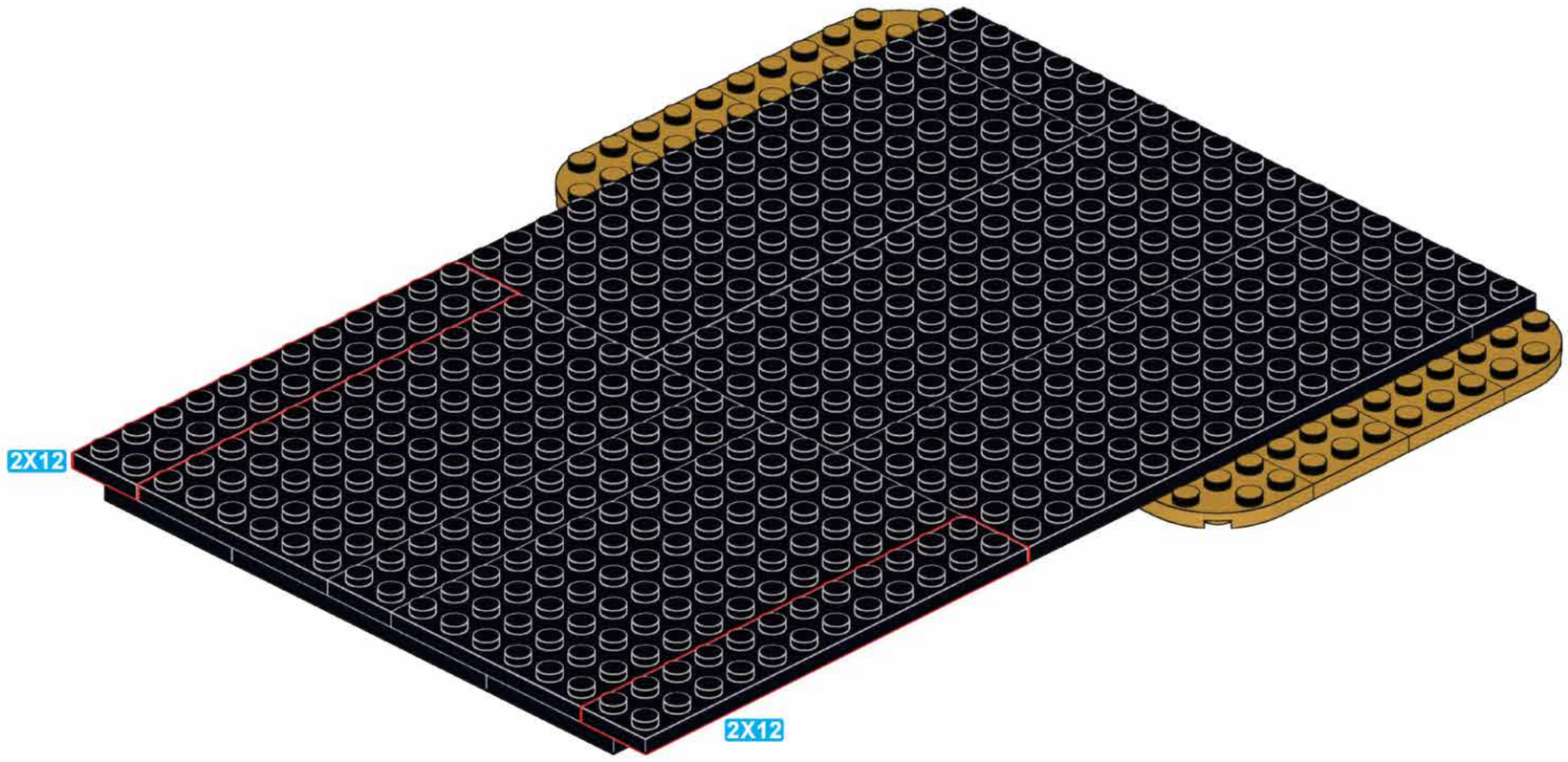

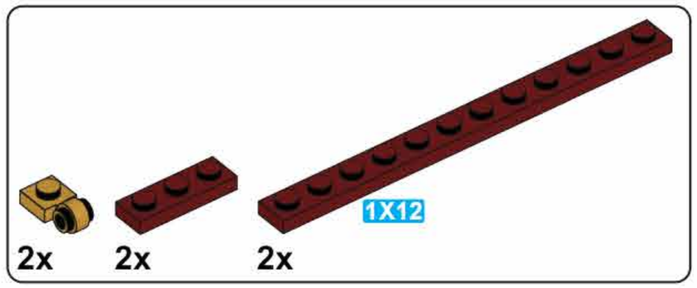

J8

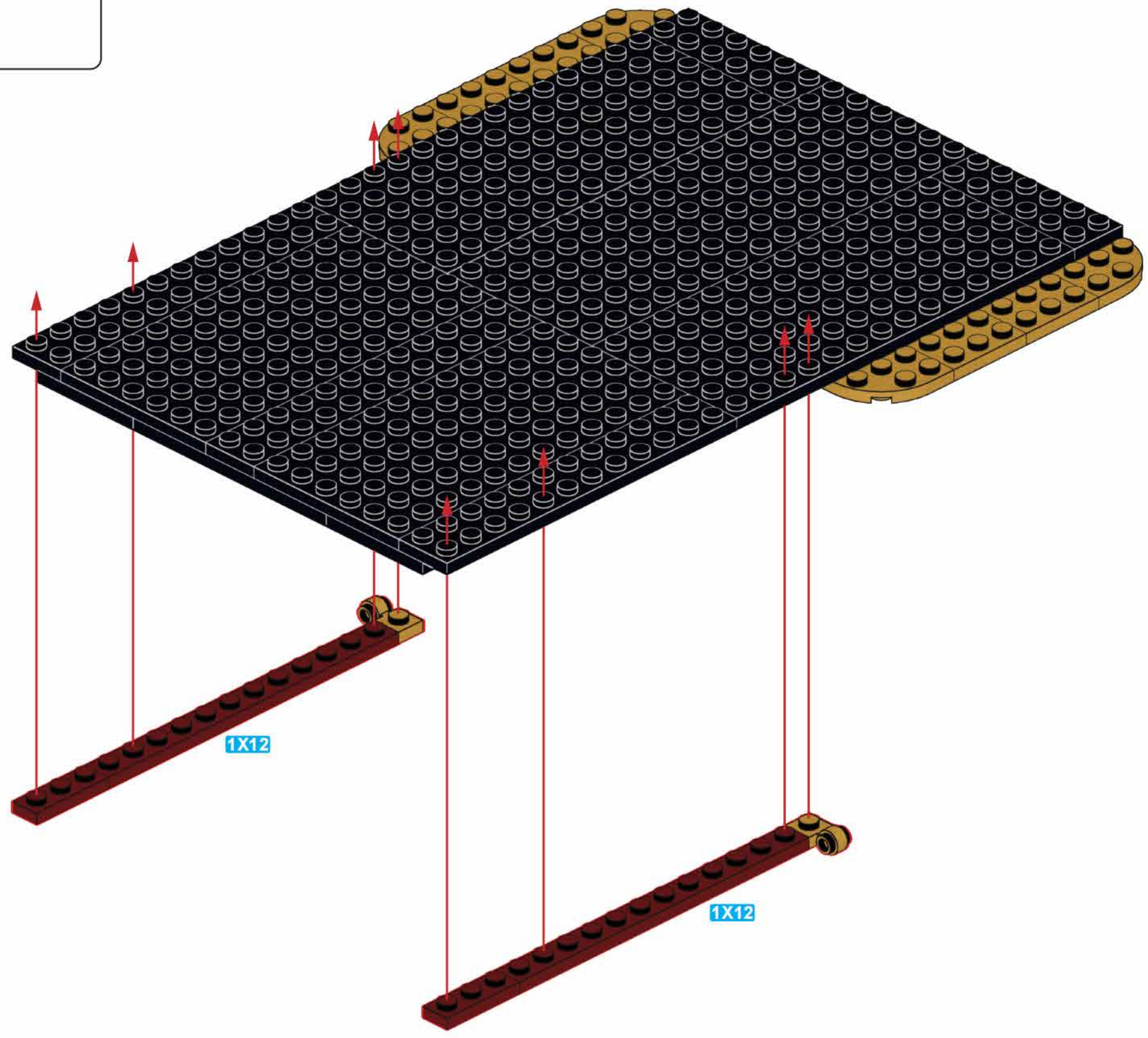

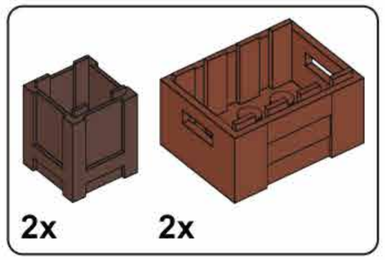

J9

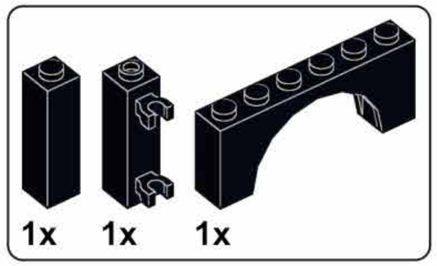

J10

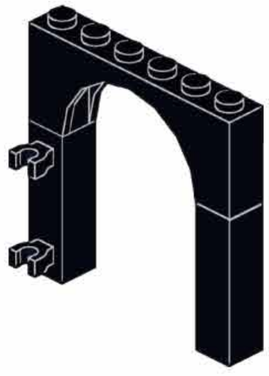

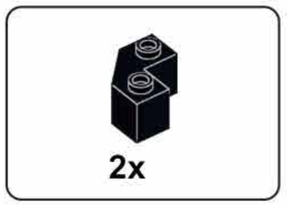

J11

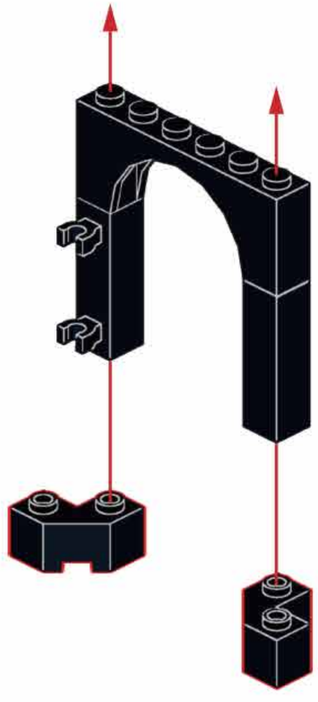

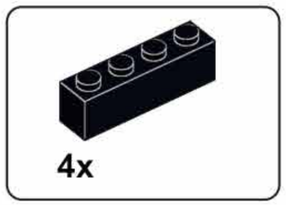

J12

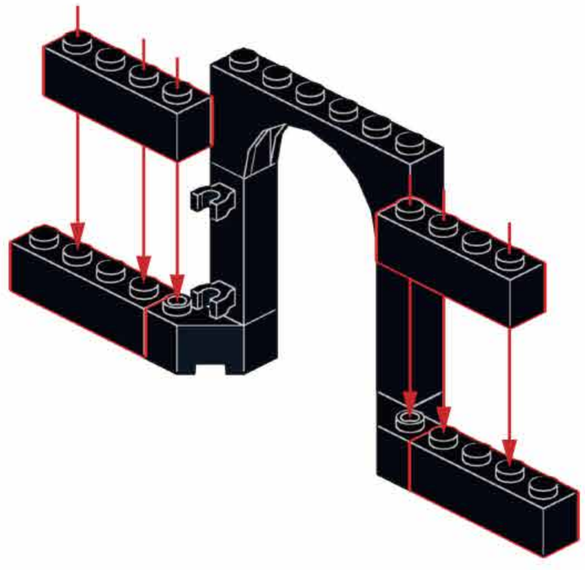

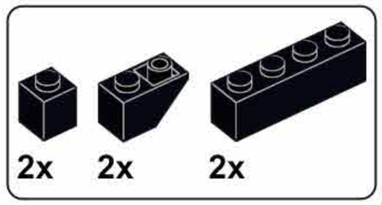

J13

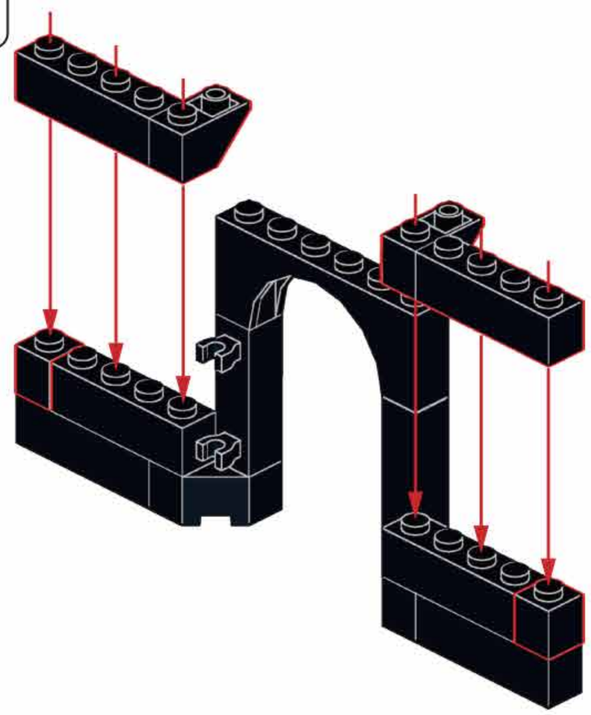

J14

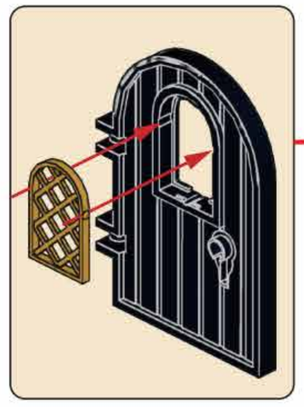

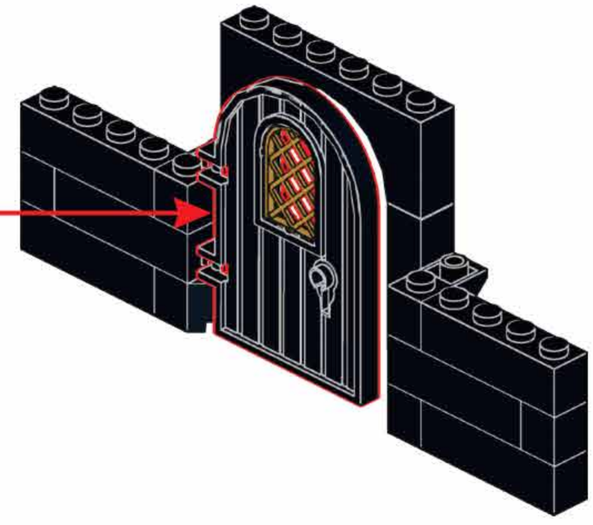

J15

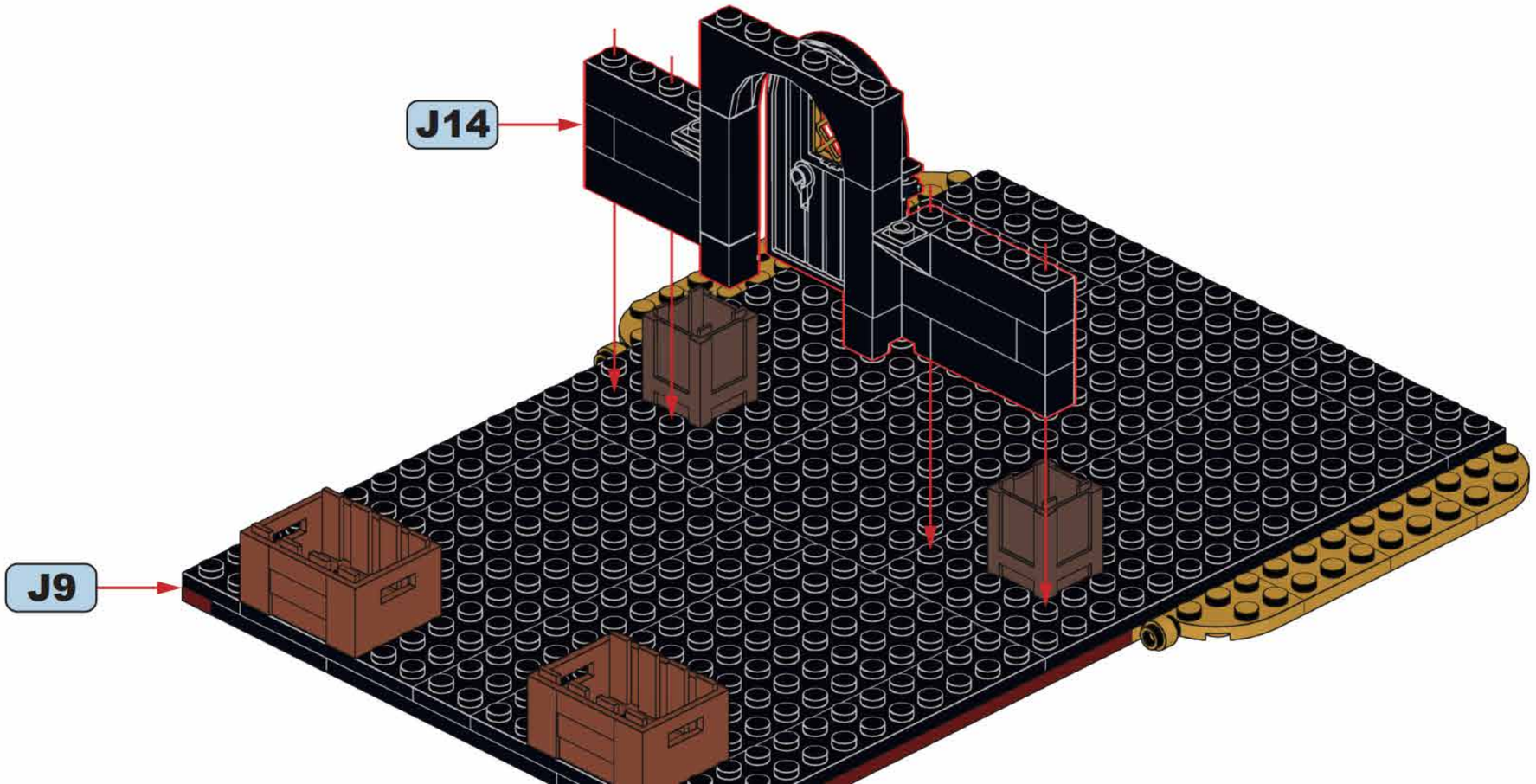

2x 4x 2x 1X3

J16

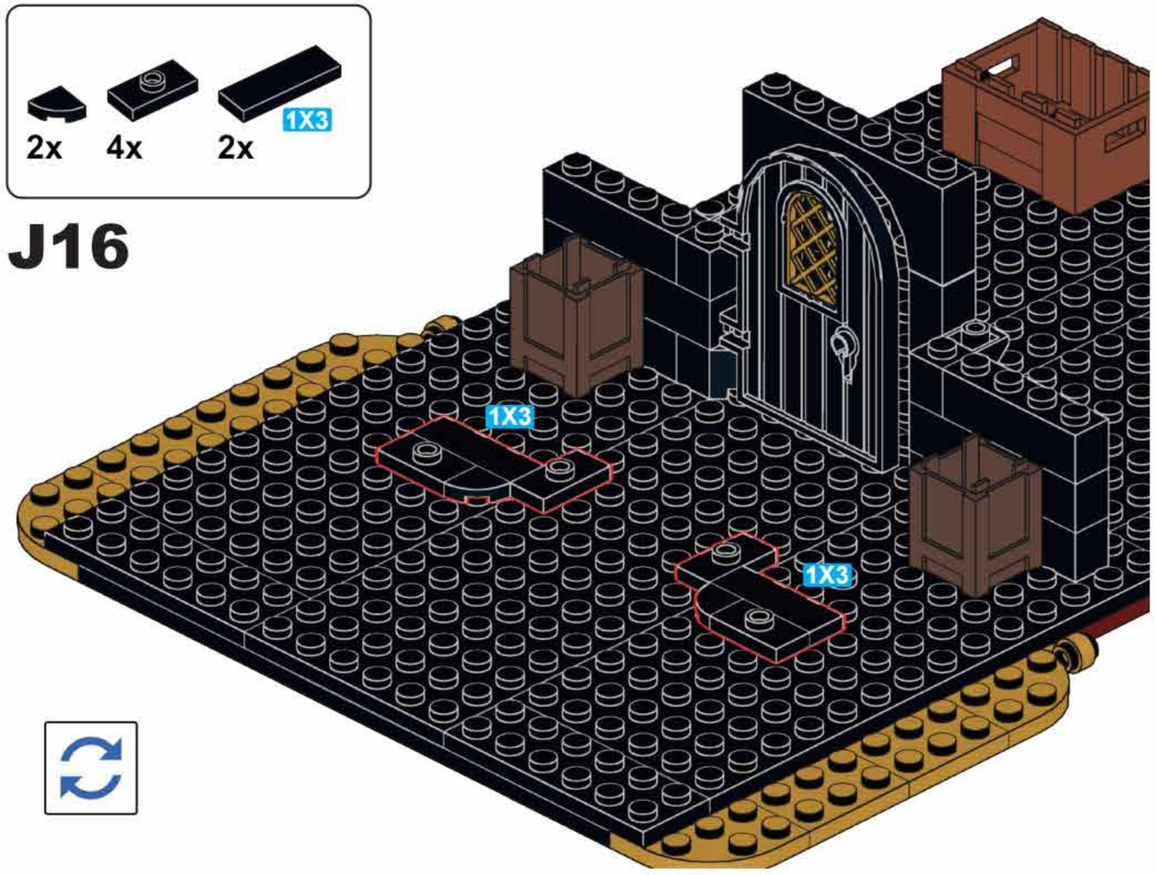

4x

J17

2x 2x 2x

J18

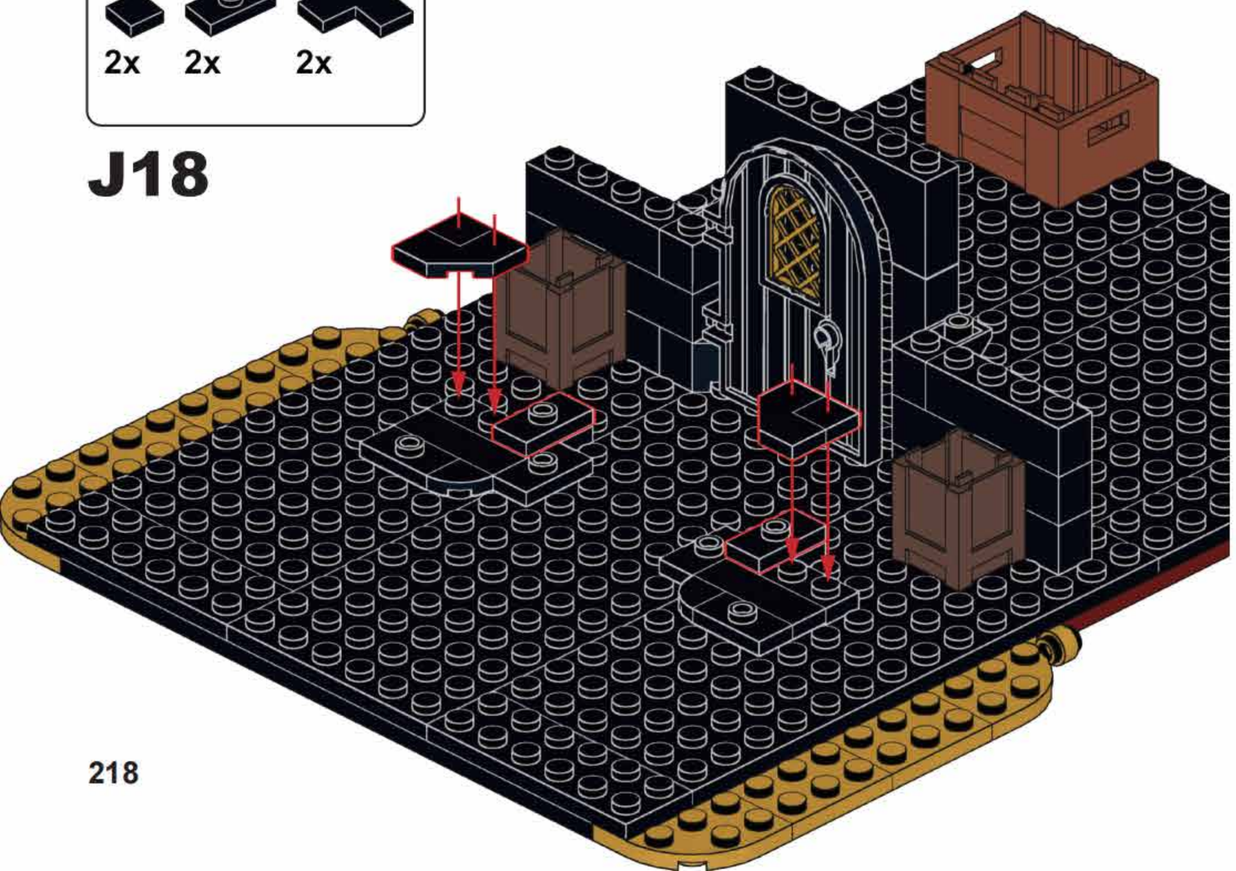

8x

J19

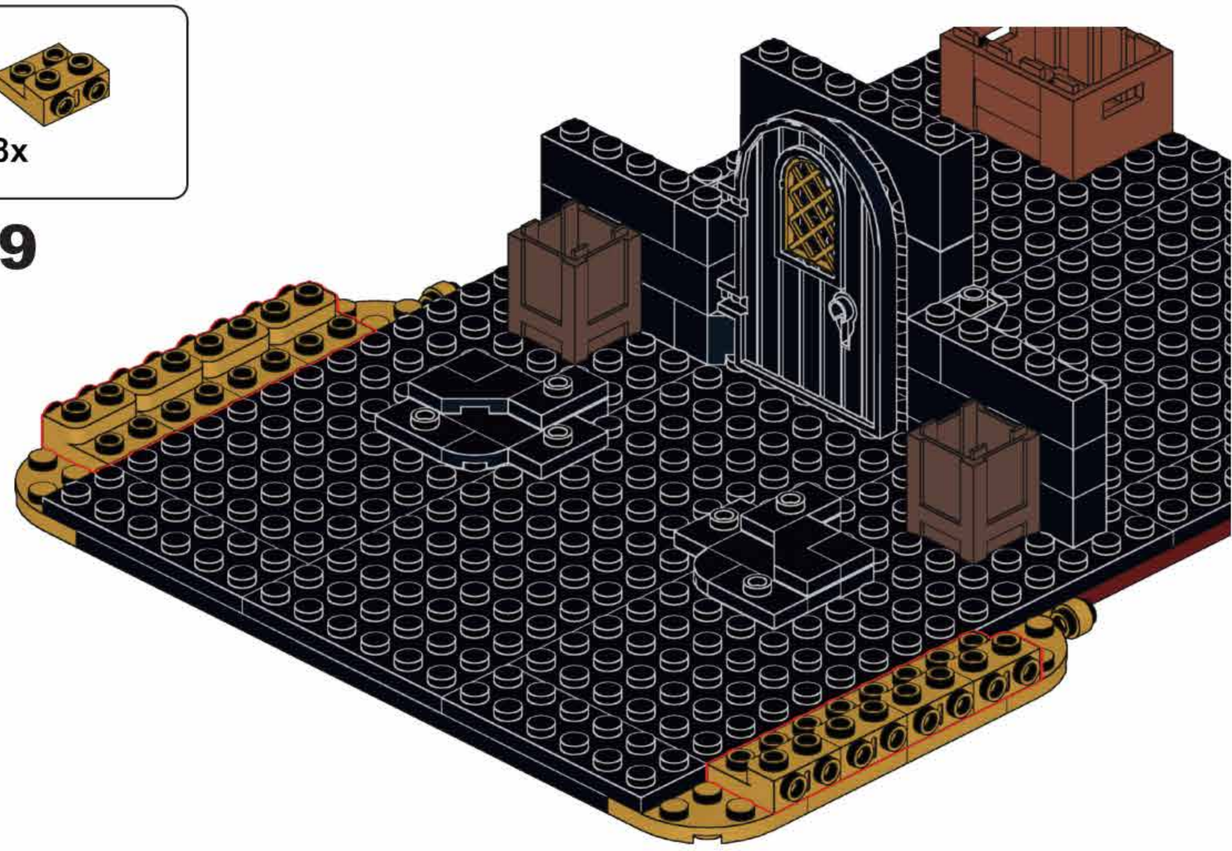

J20

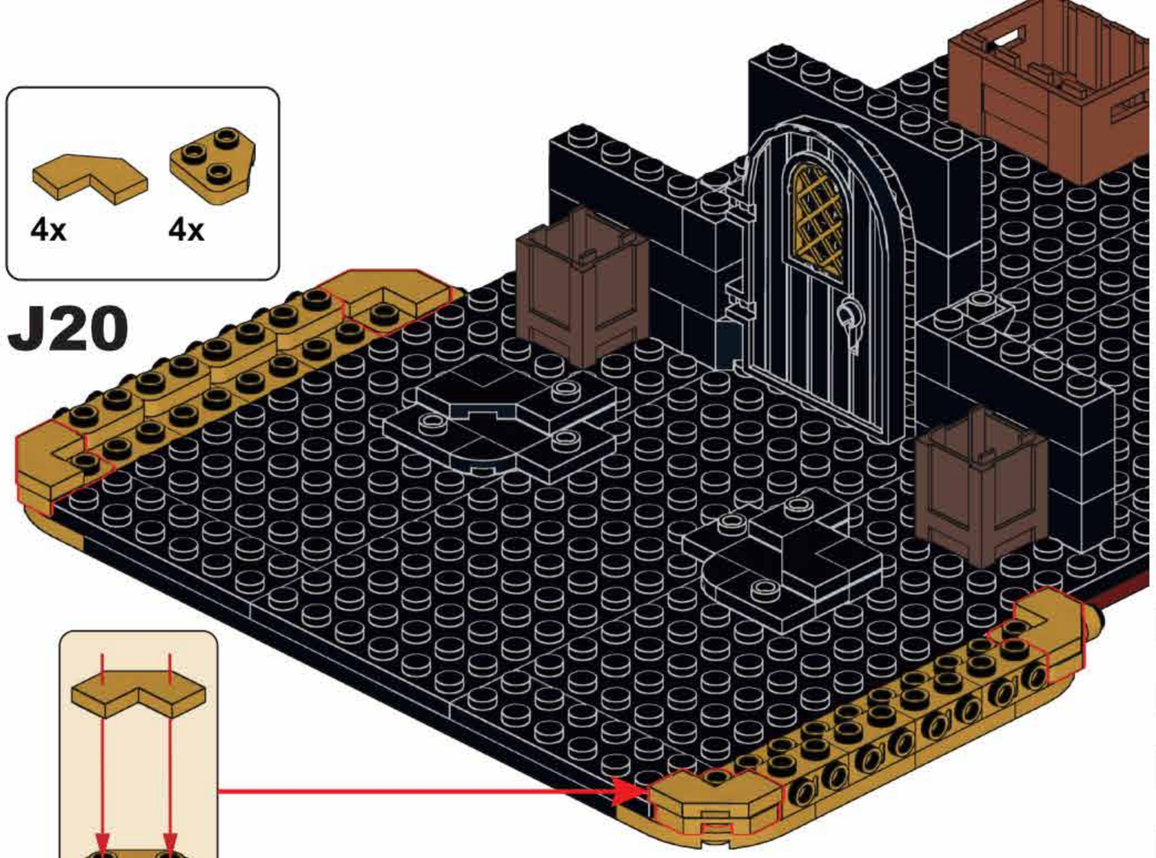

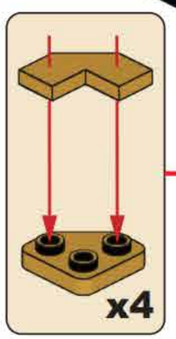

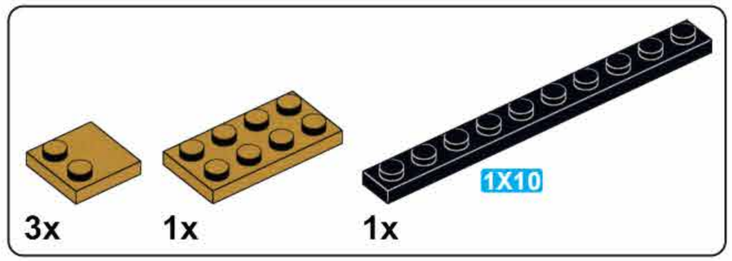

J21

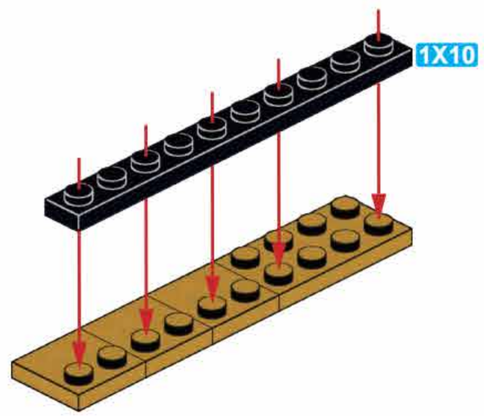

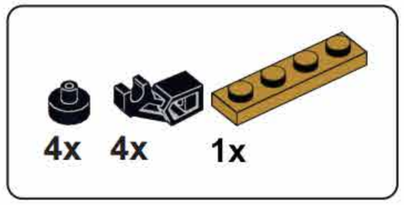

J22

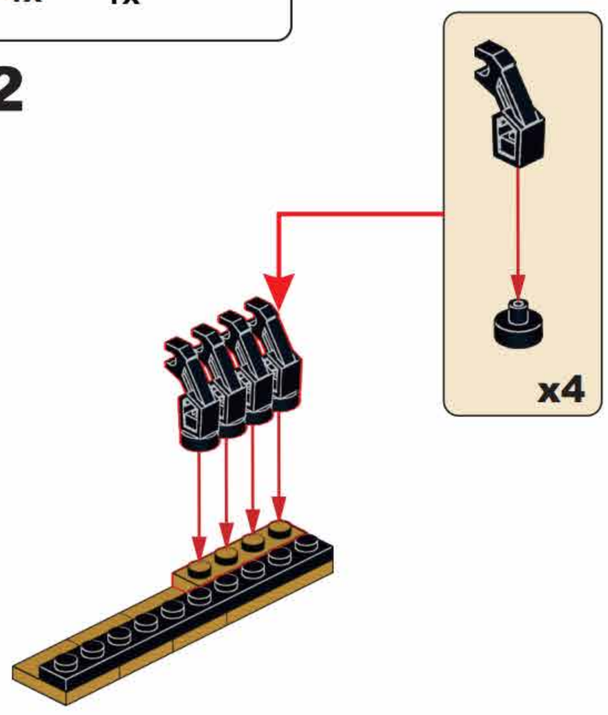

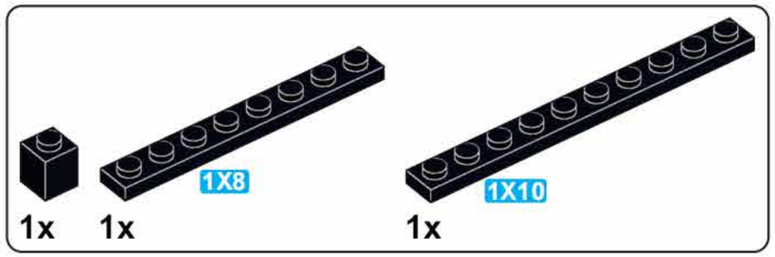

J23

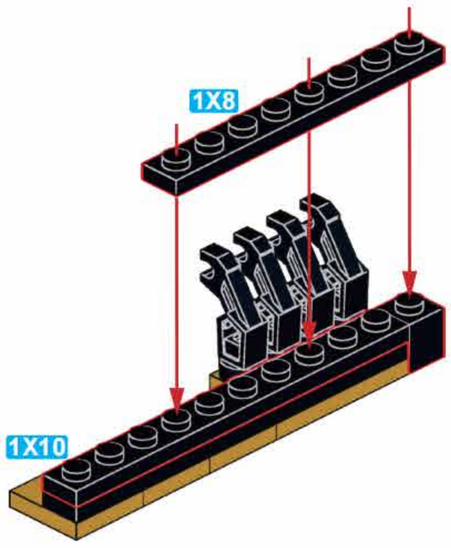

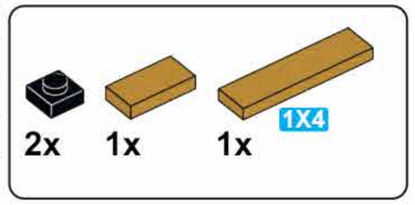

J24

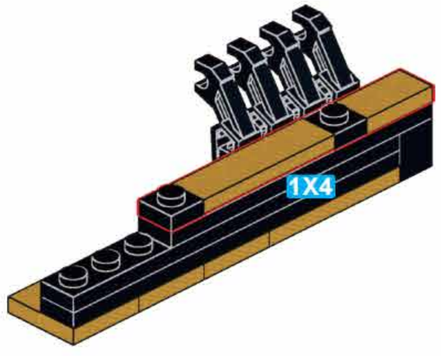

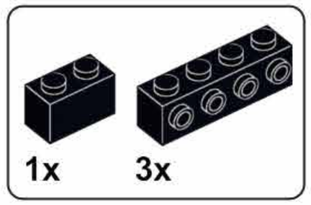

J25

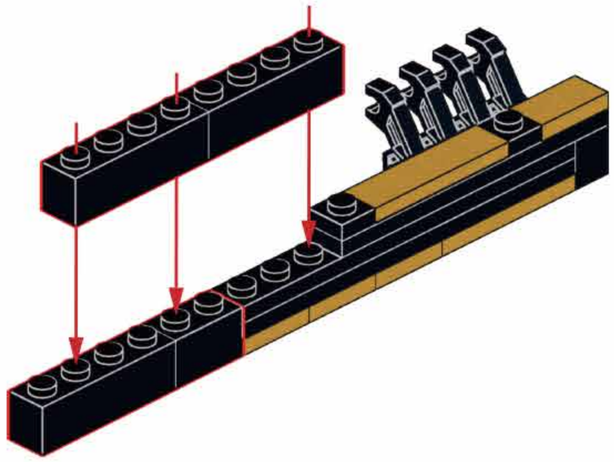

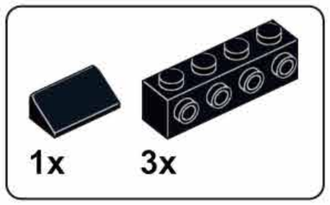

J26

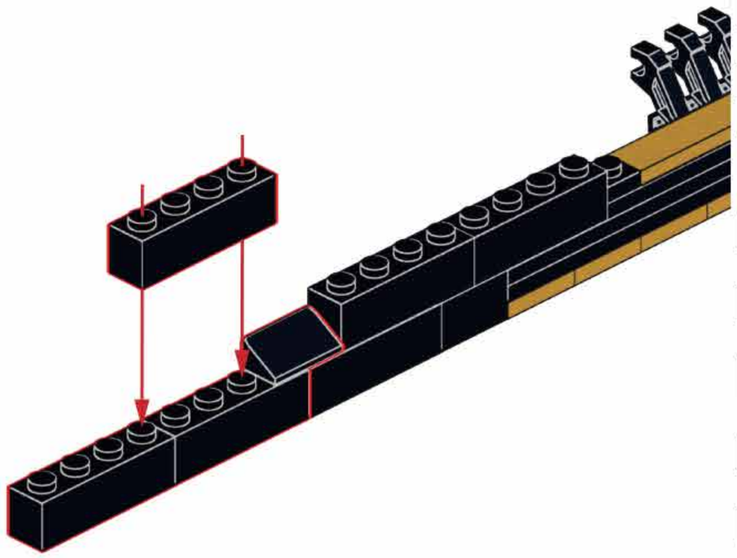

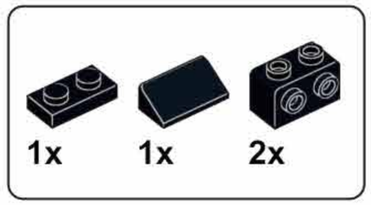

J27

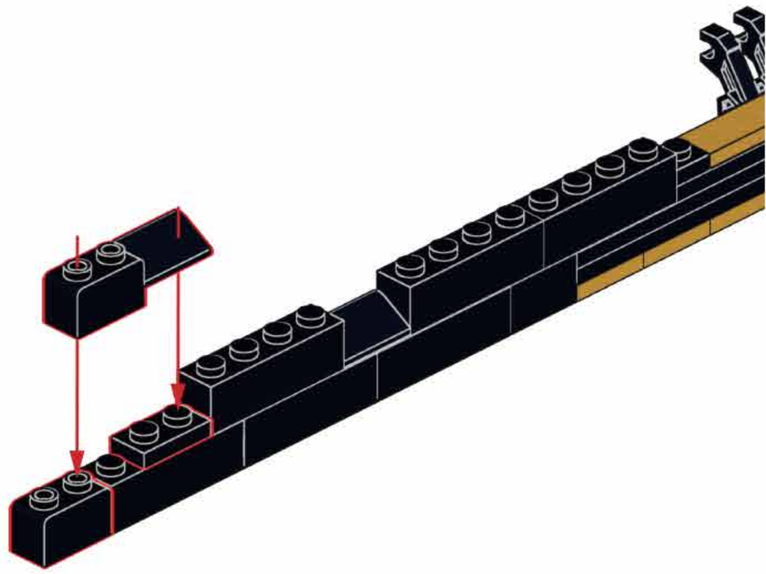

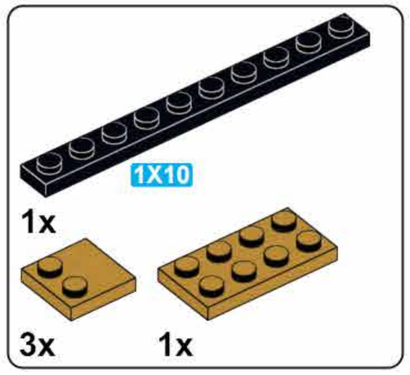

J28

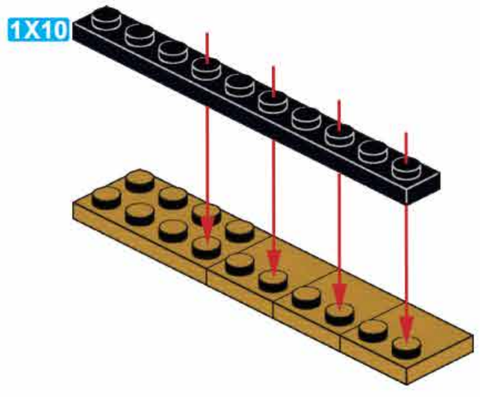

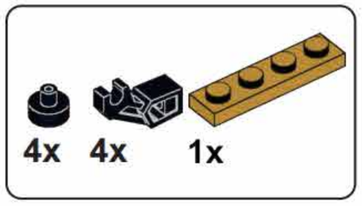

J29

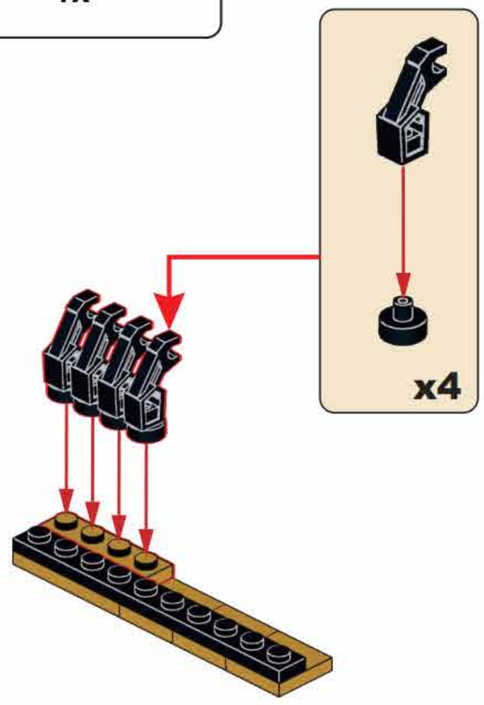

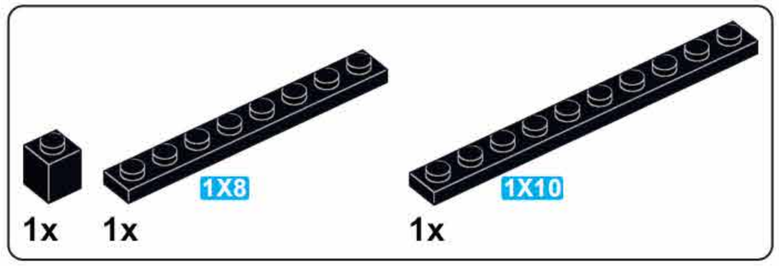

J30

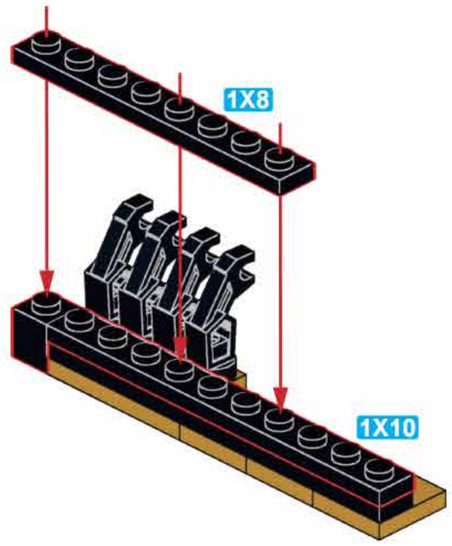

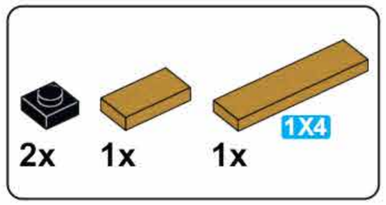

J31

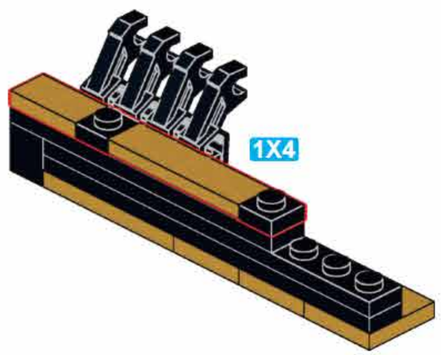

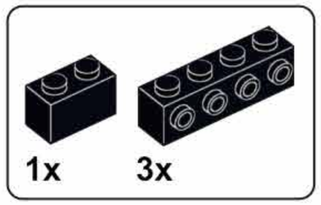

J32

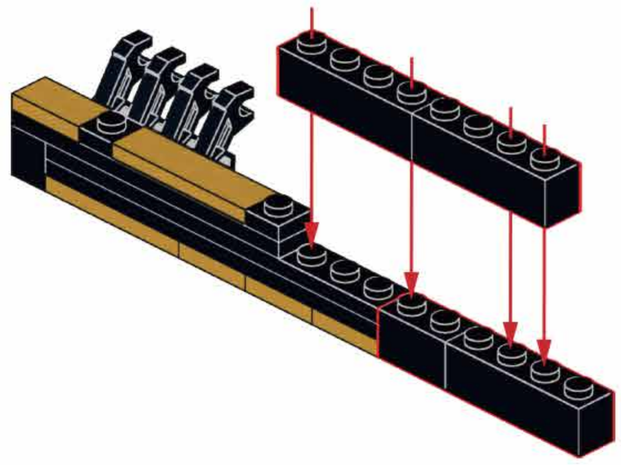

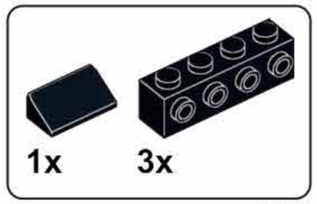

J33

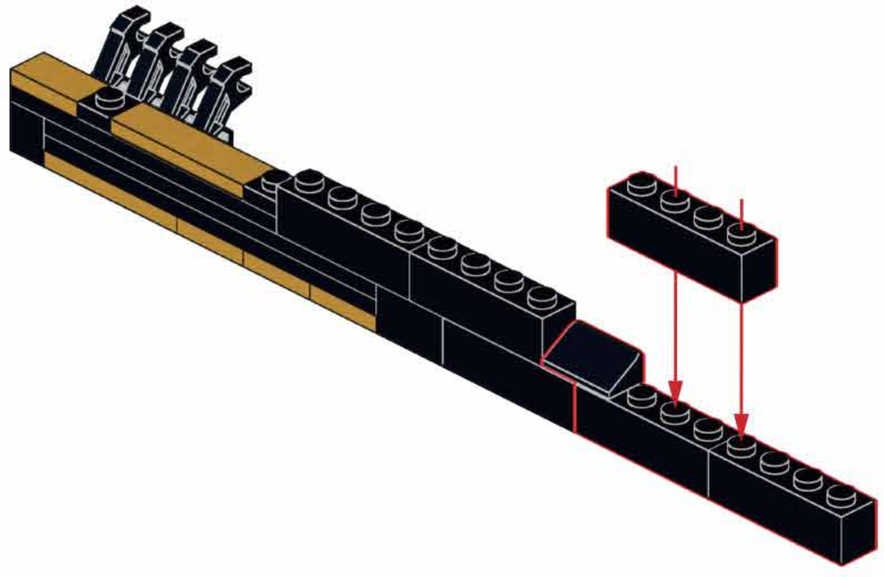

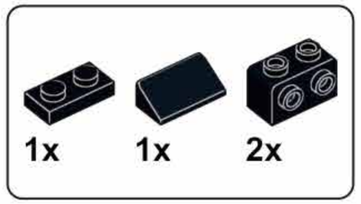

J34

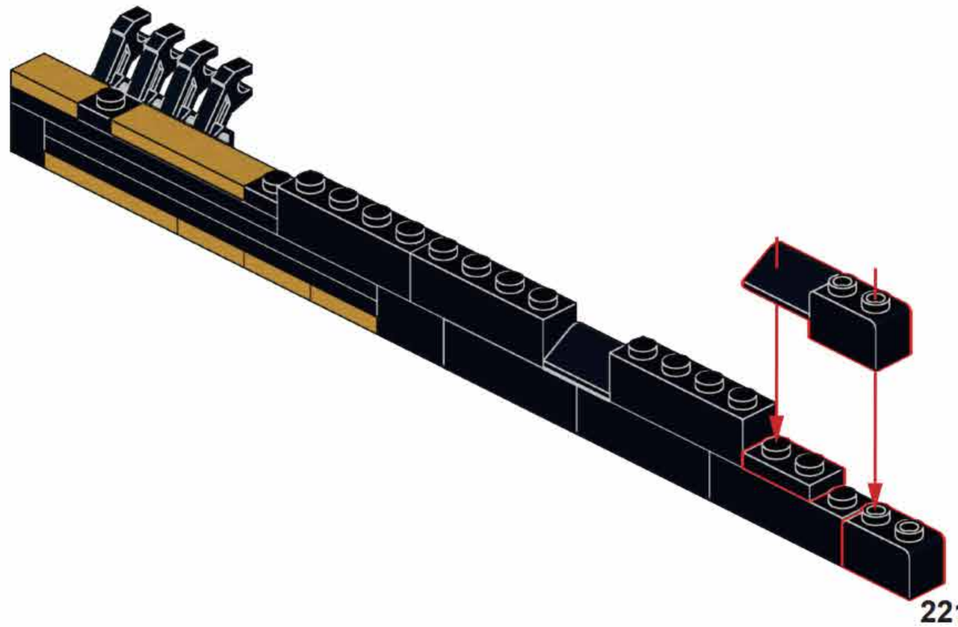

J35

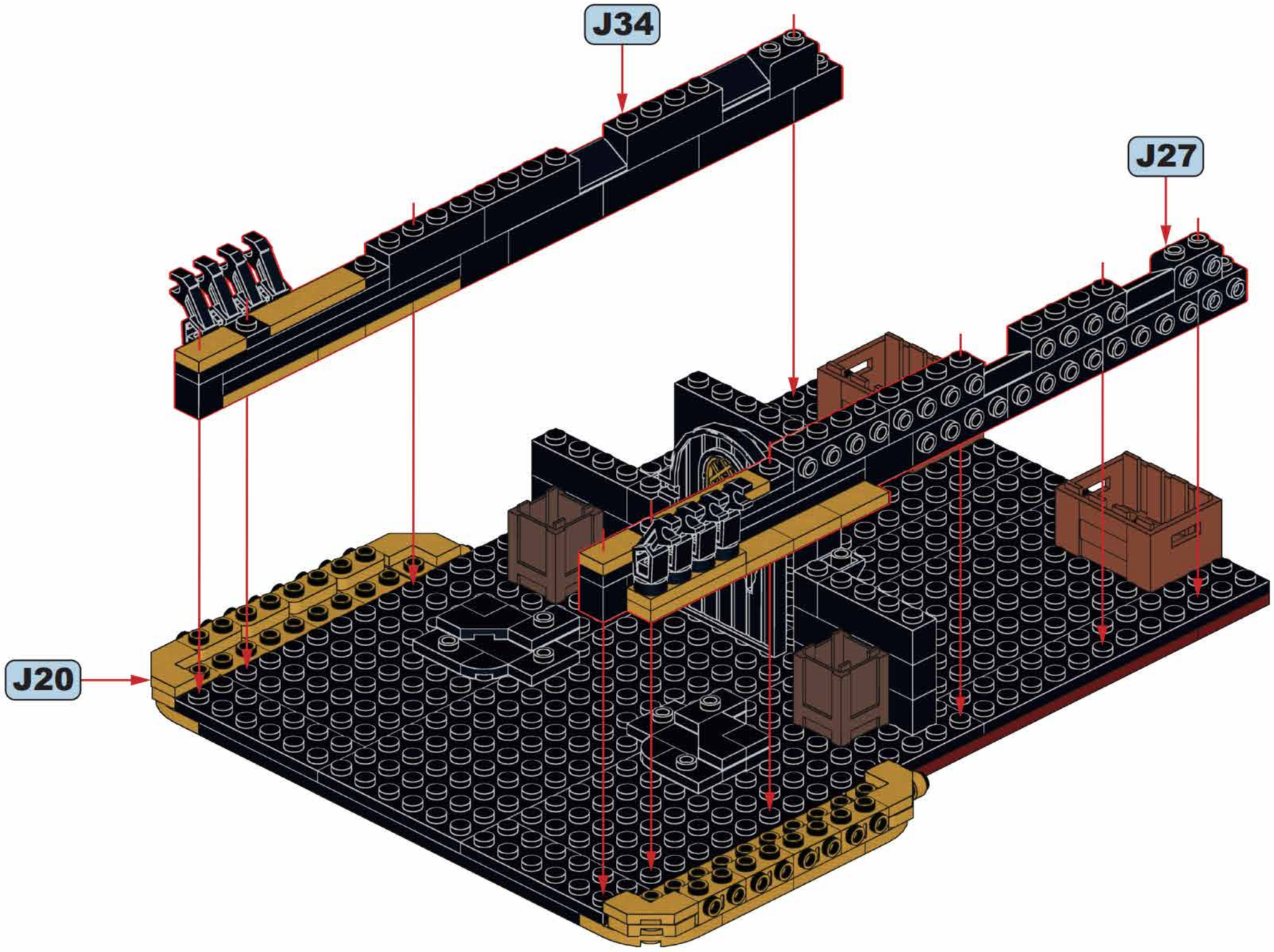

4x

J36

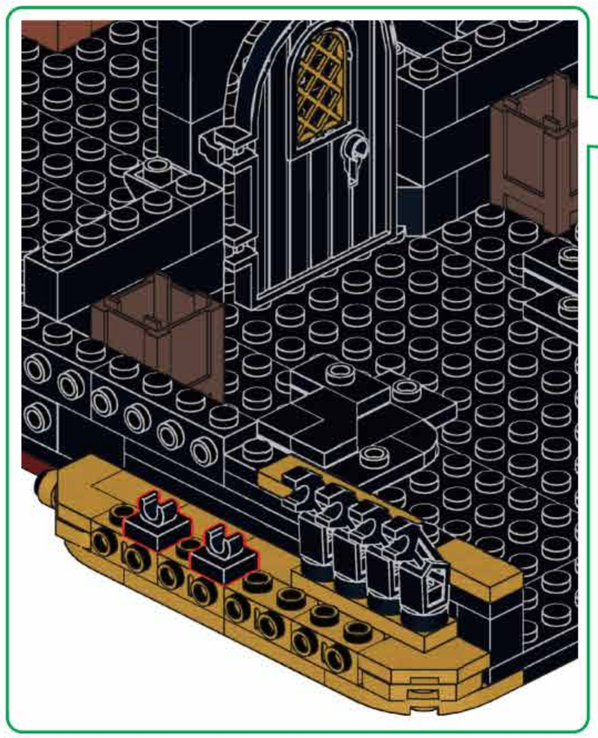

2x 1X4 4x

J37

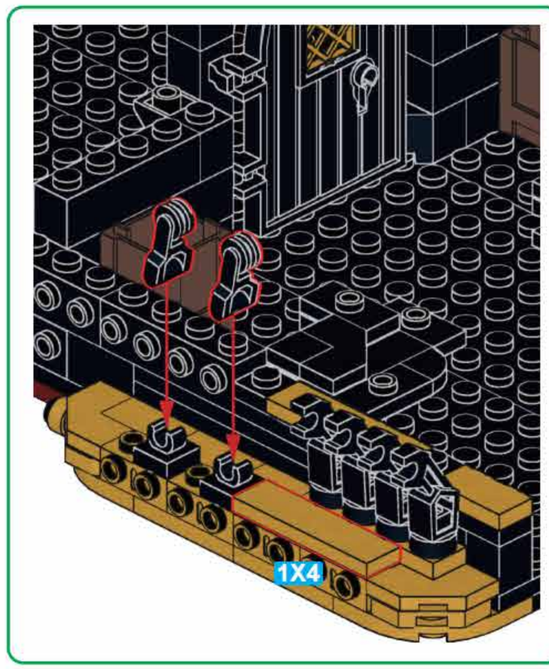

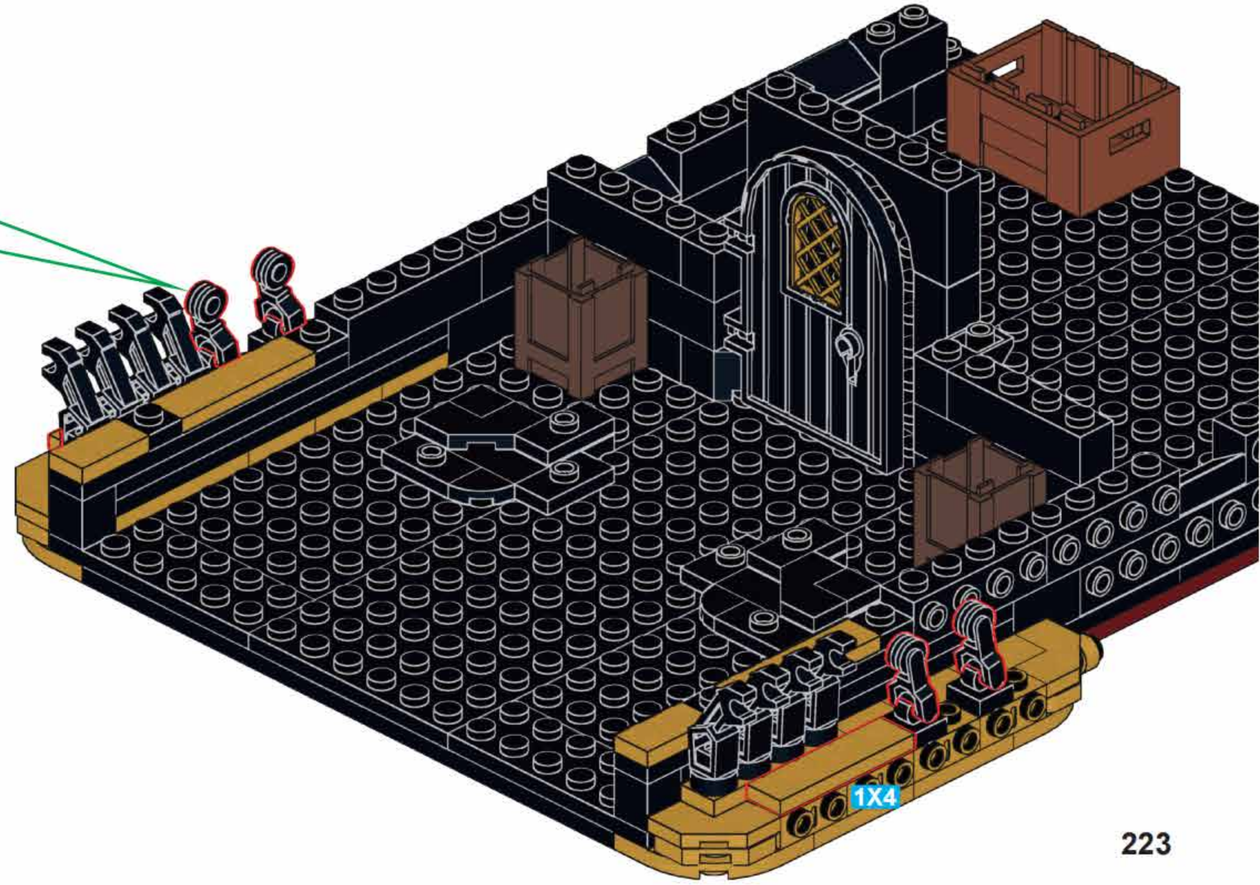

2x

J38

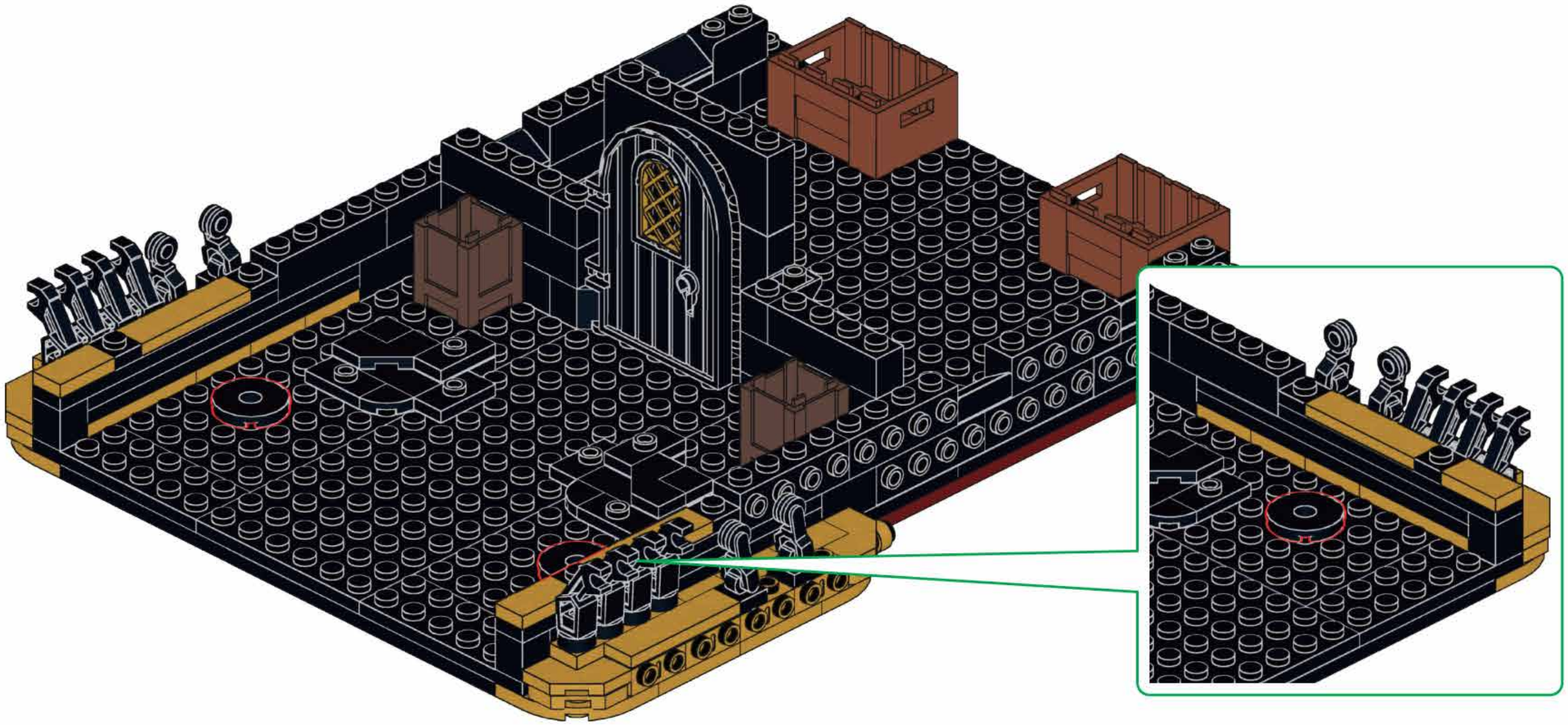

2x 2x 2x

J39

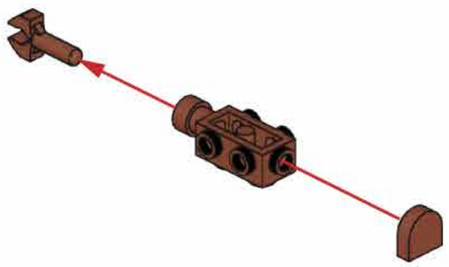

x2

2x

J40

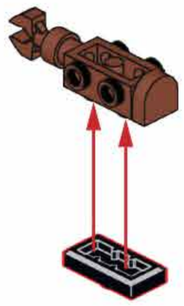

x2

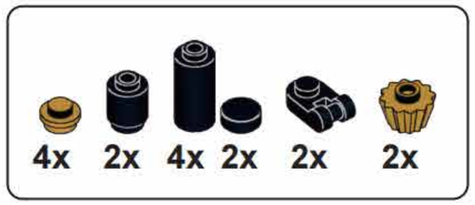

J41

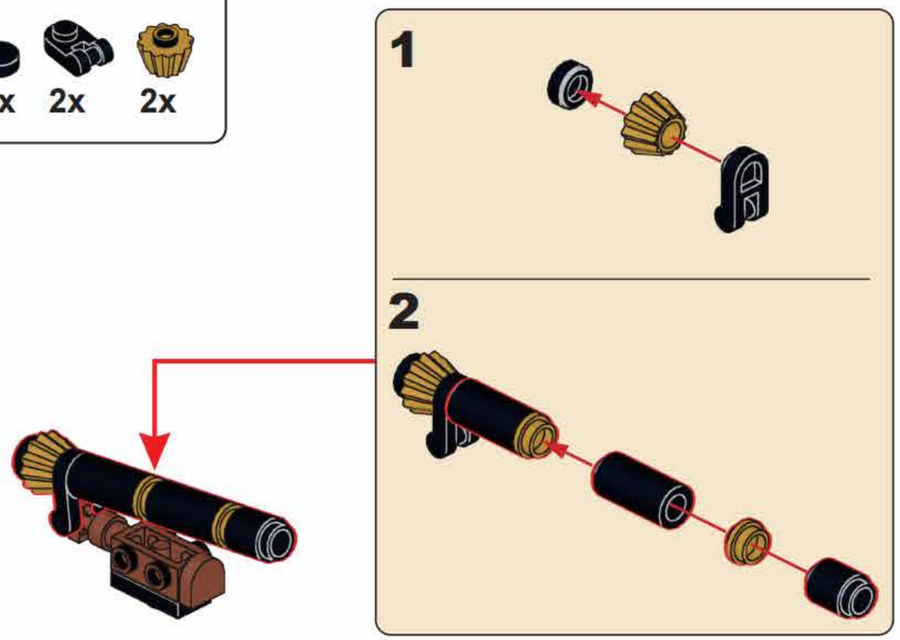

x2

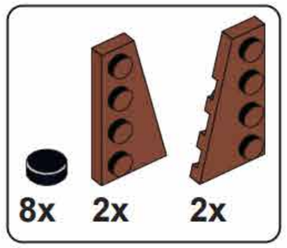

J42

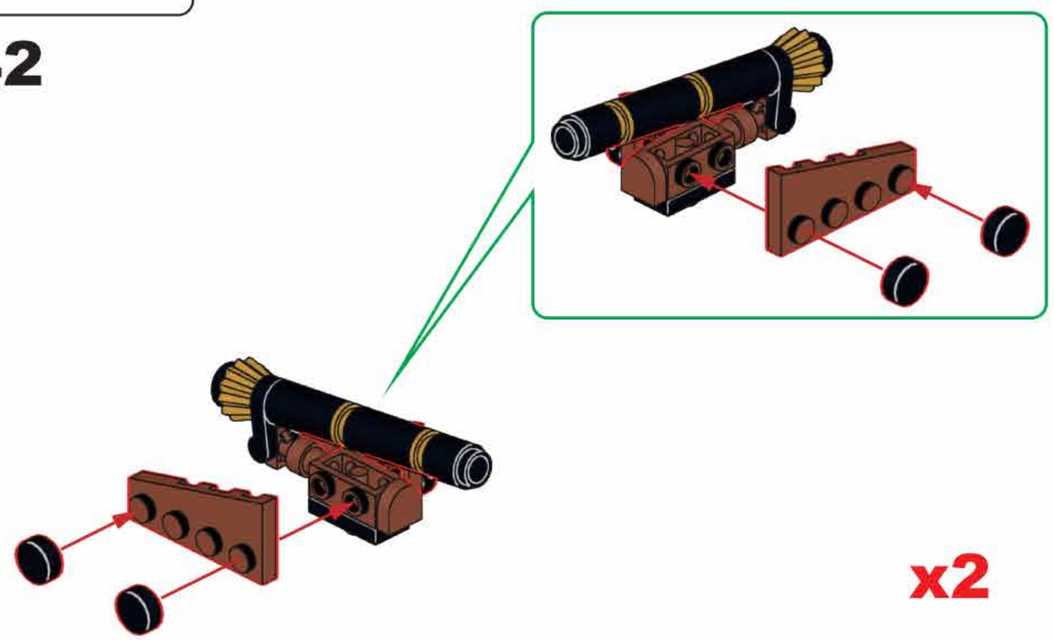

x2

J43

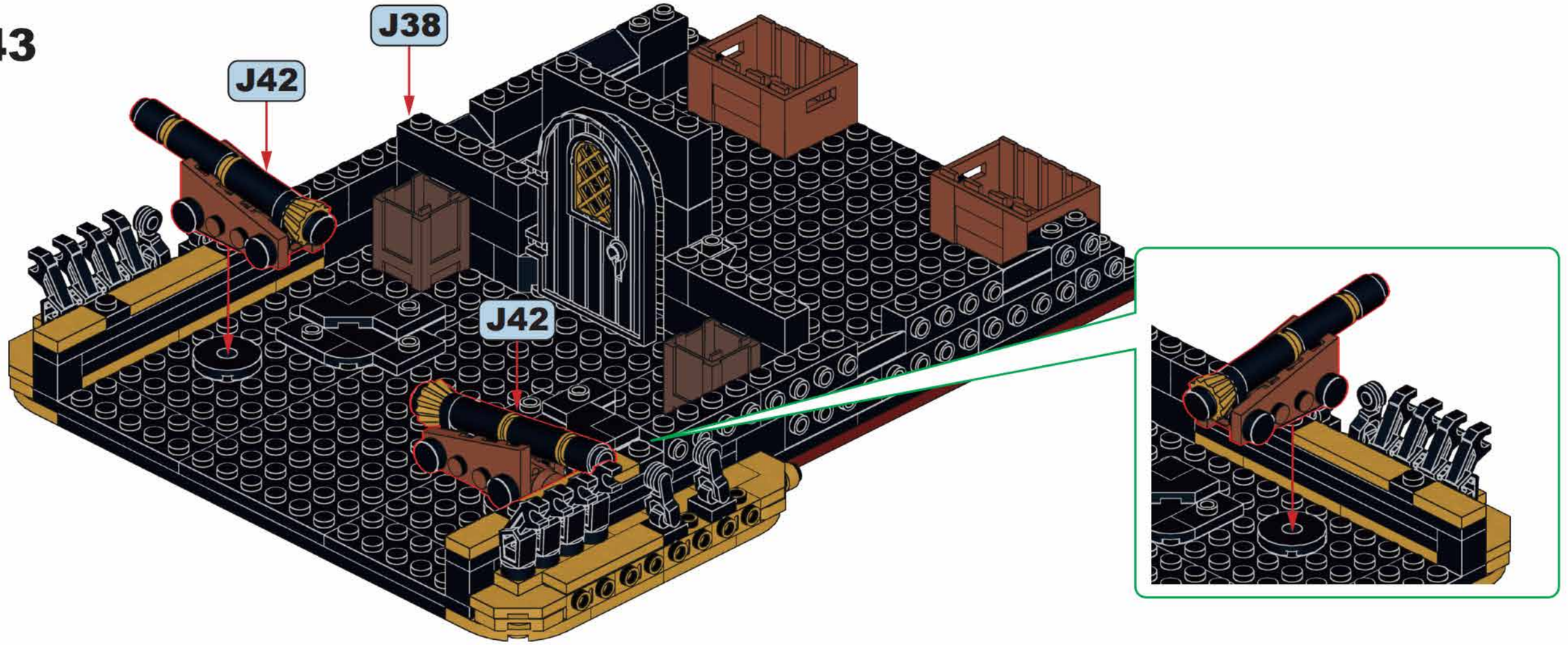

2x 2x

J44

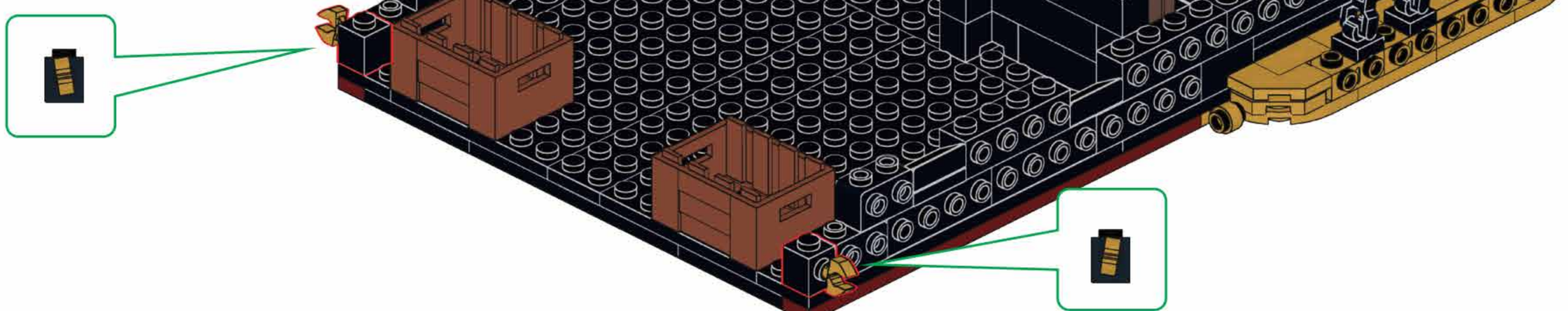

4x

J45

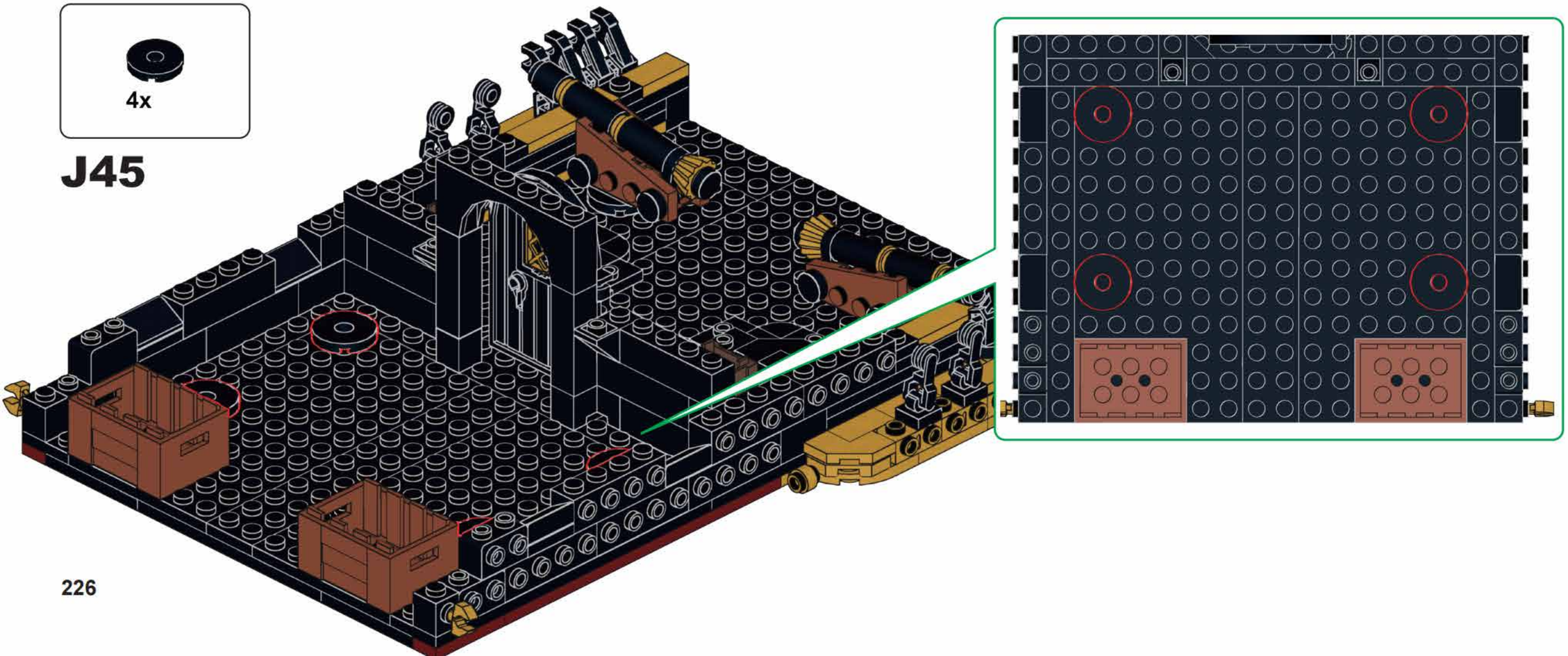

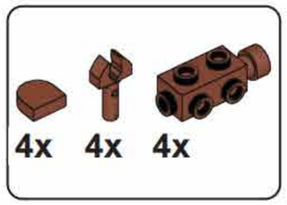

J46

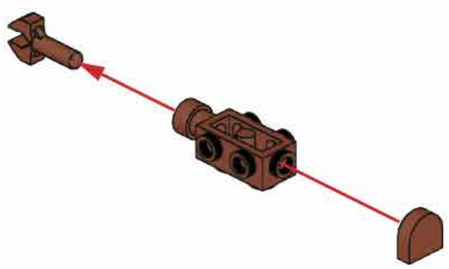

x4

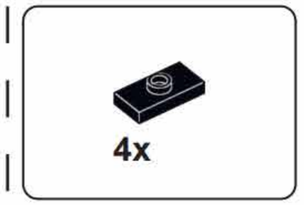

J47

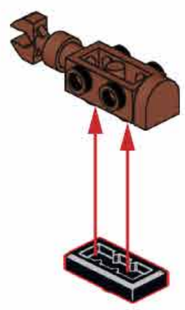

x4

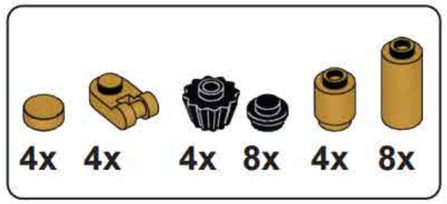

J48

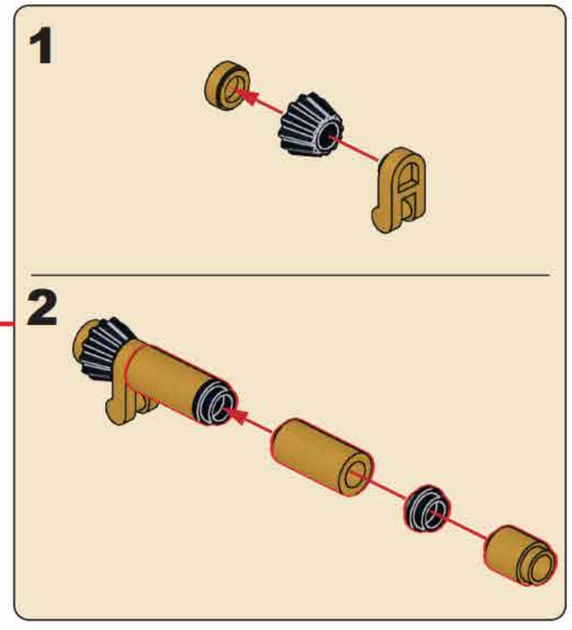

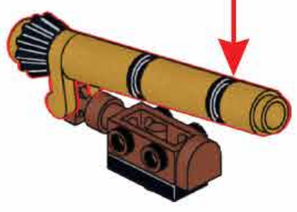

x4

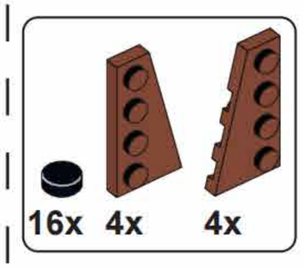

J49

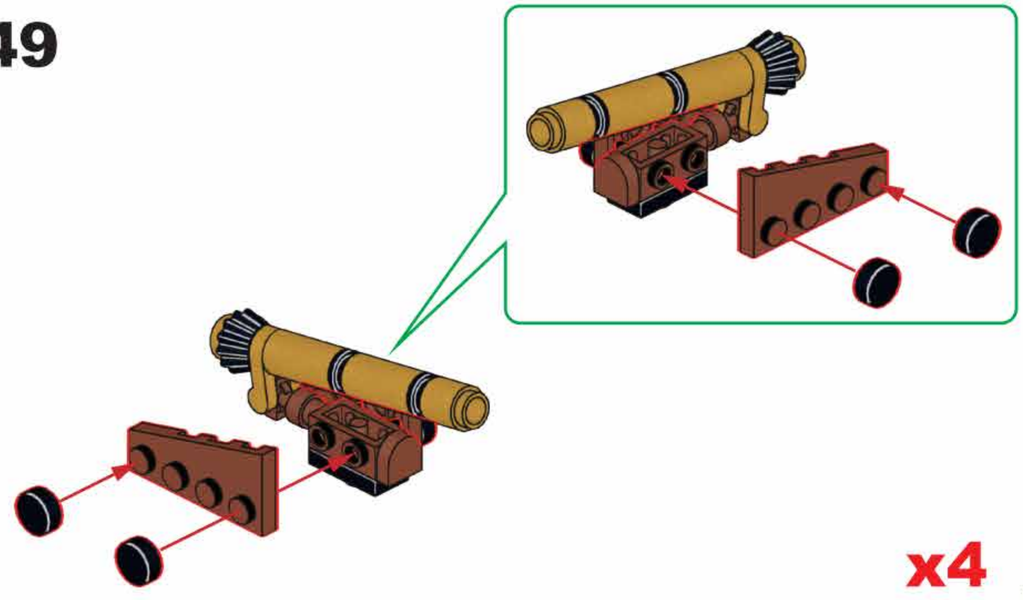

x4

J50

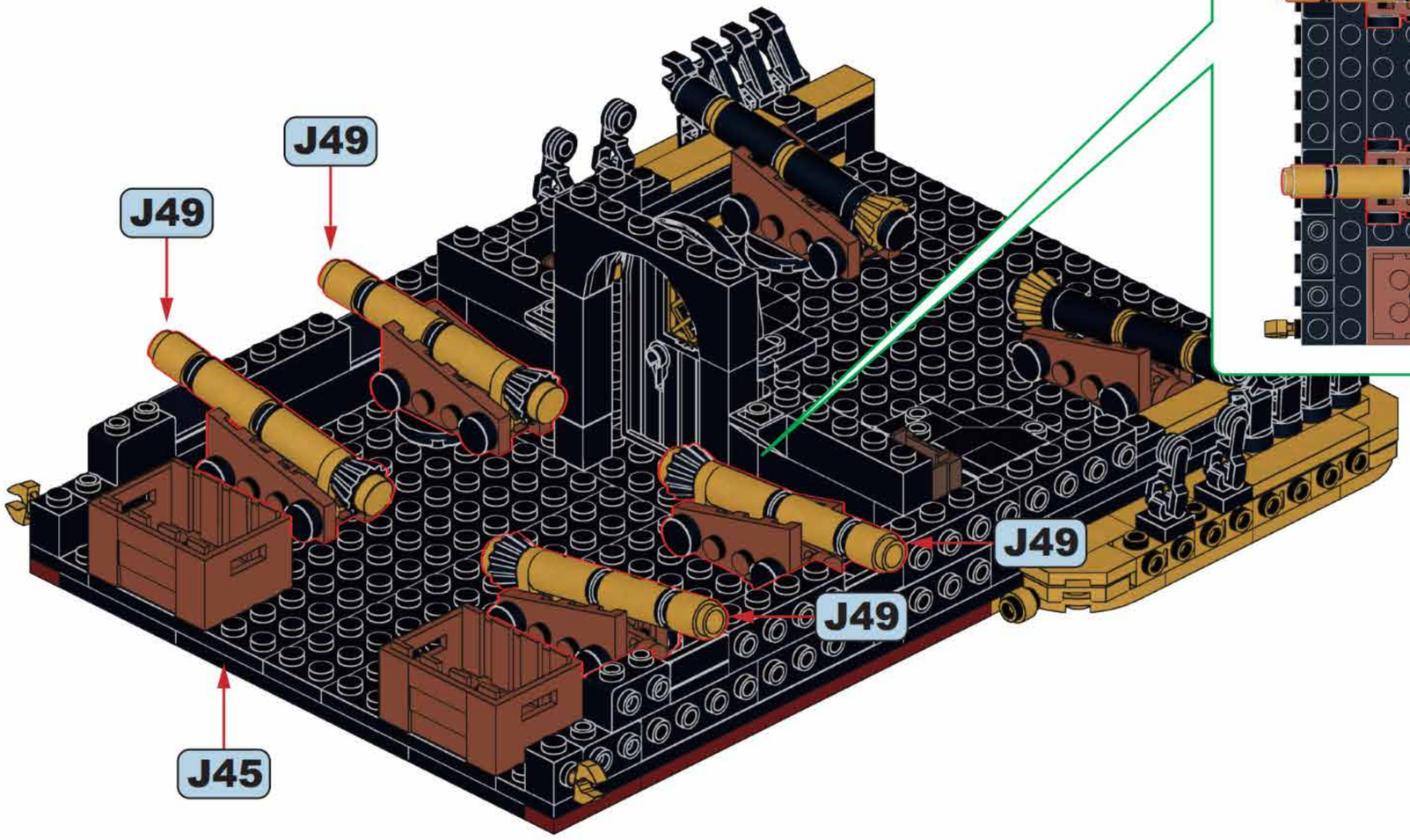

11

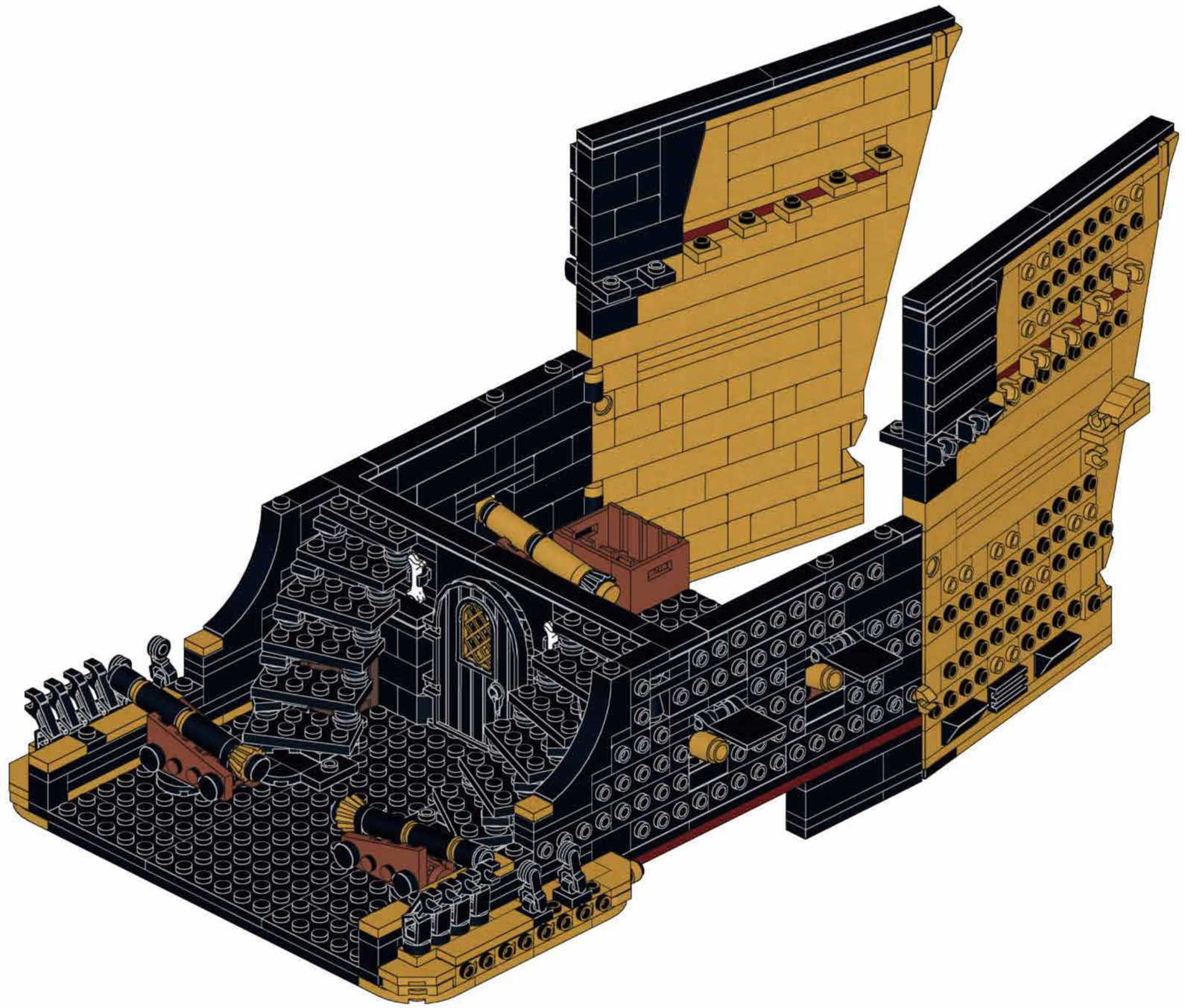

K

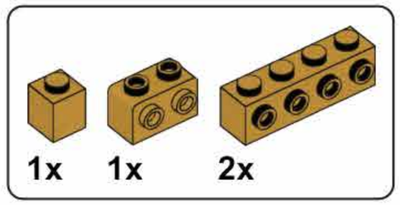

K1

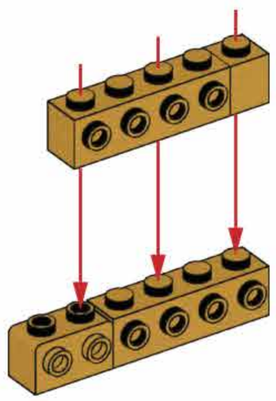

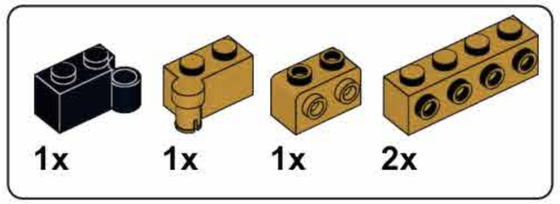

K3

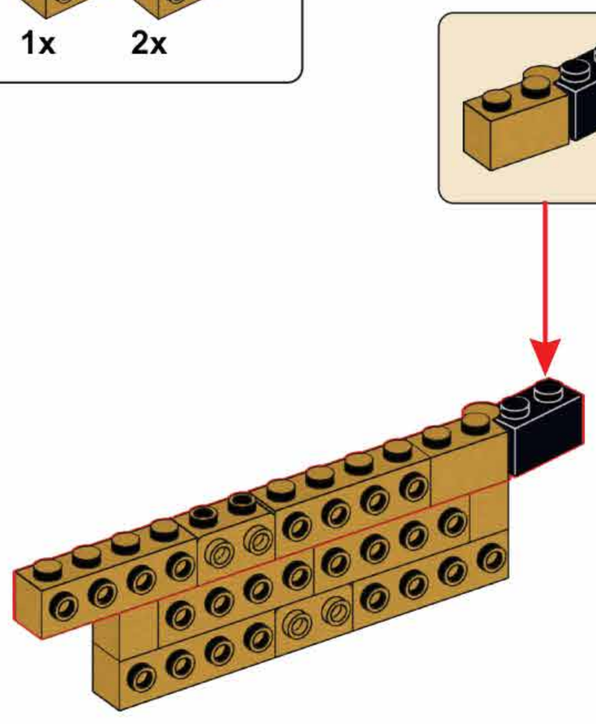

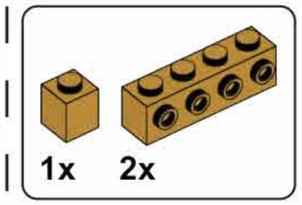

K2

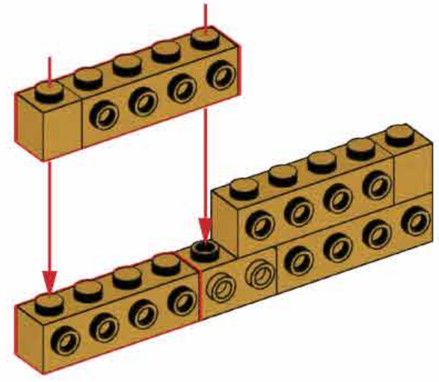

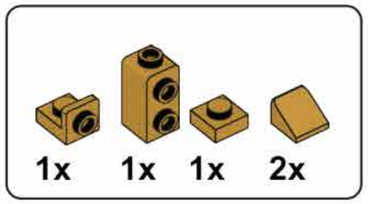

K4

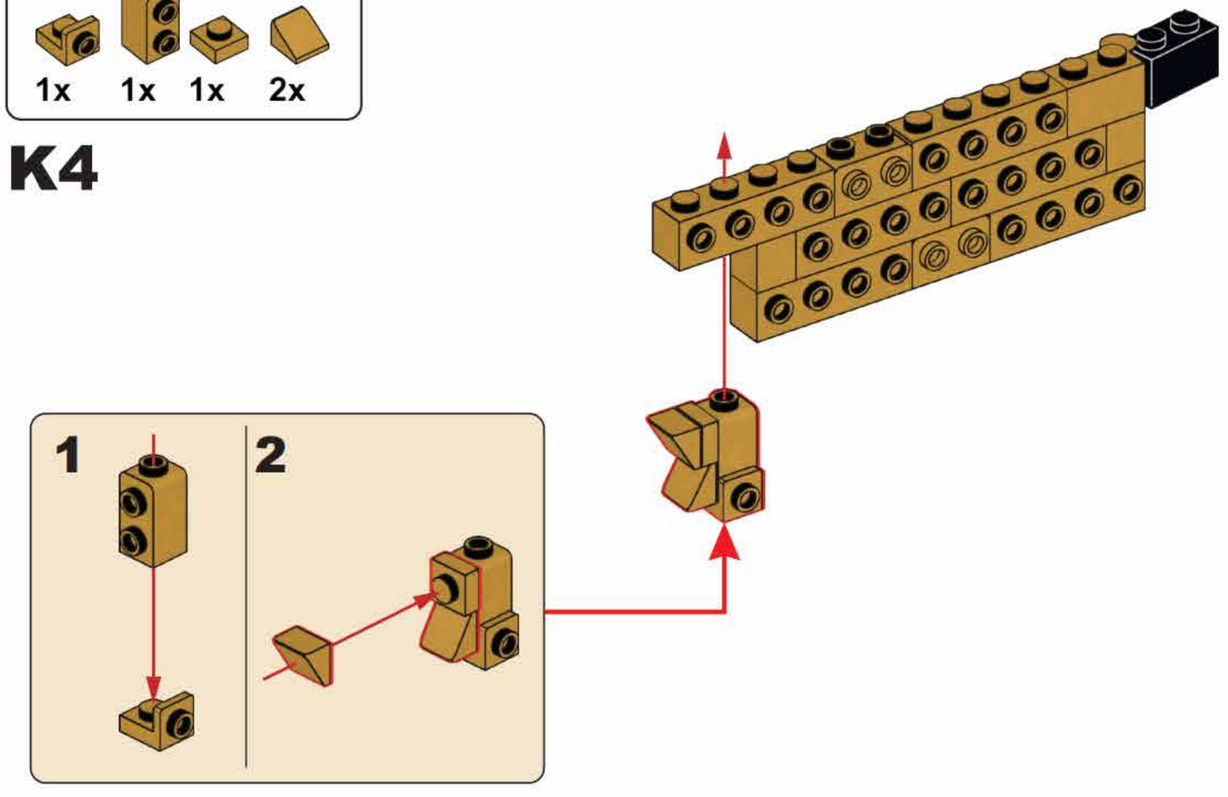

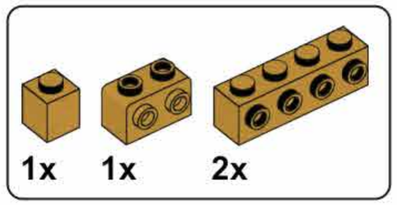

K5

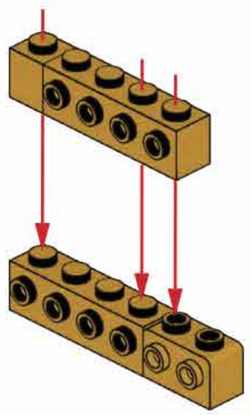

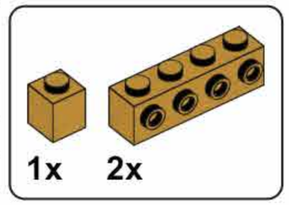

K6

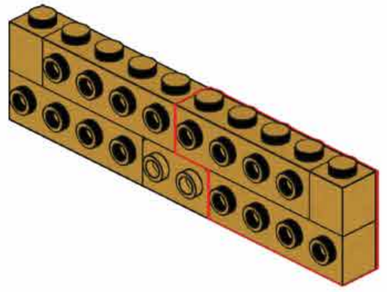

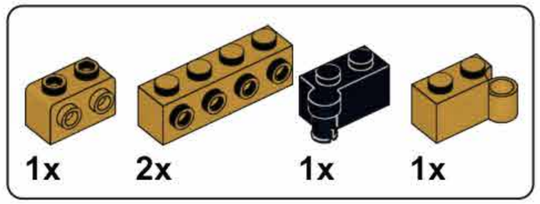

K7

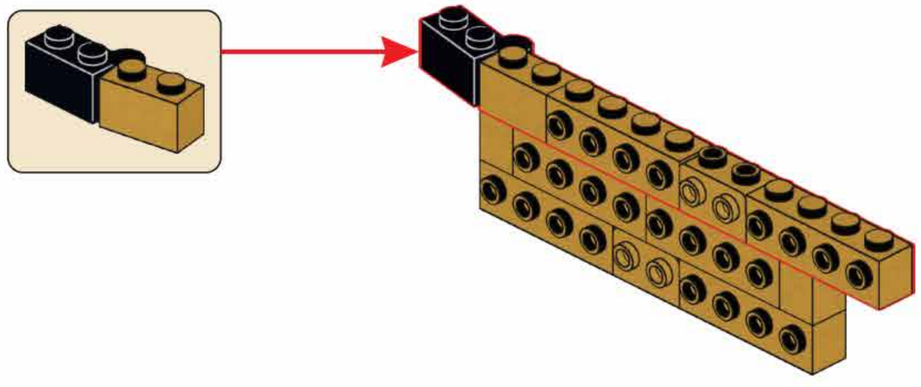

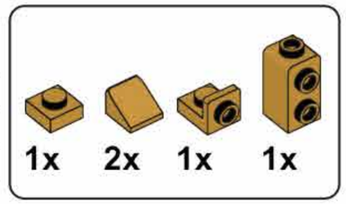

K8

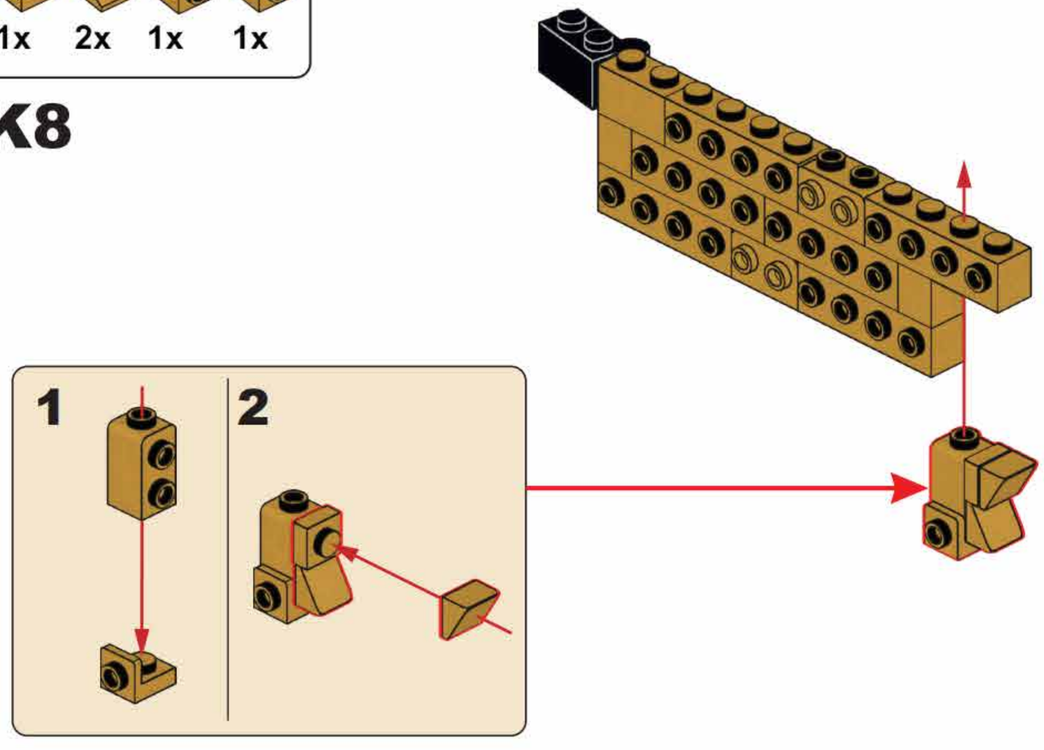

K9

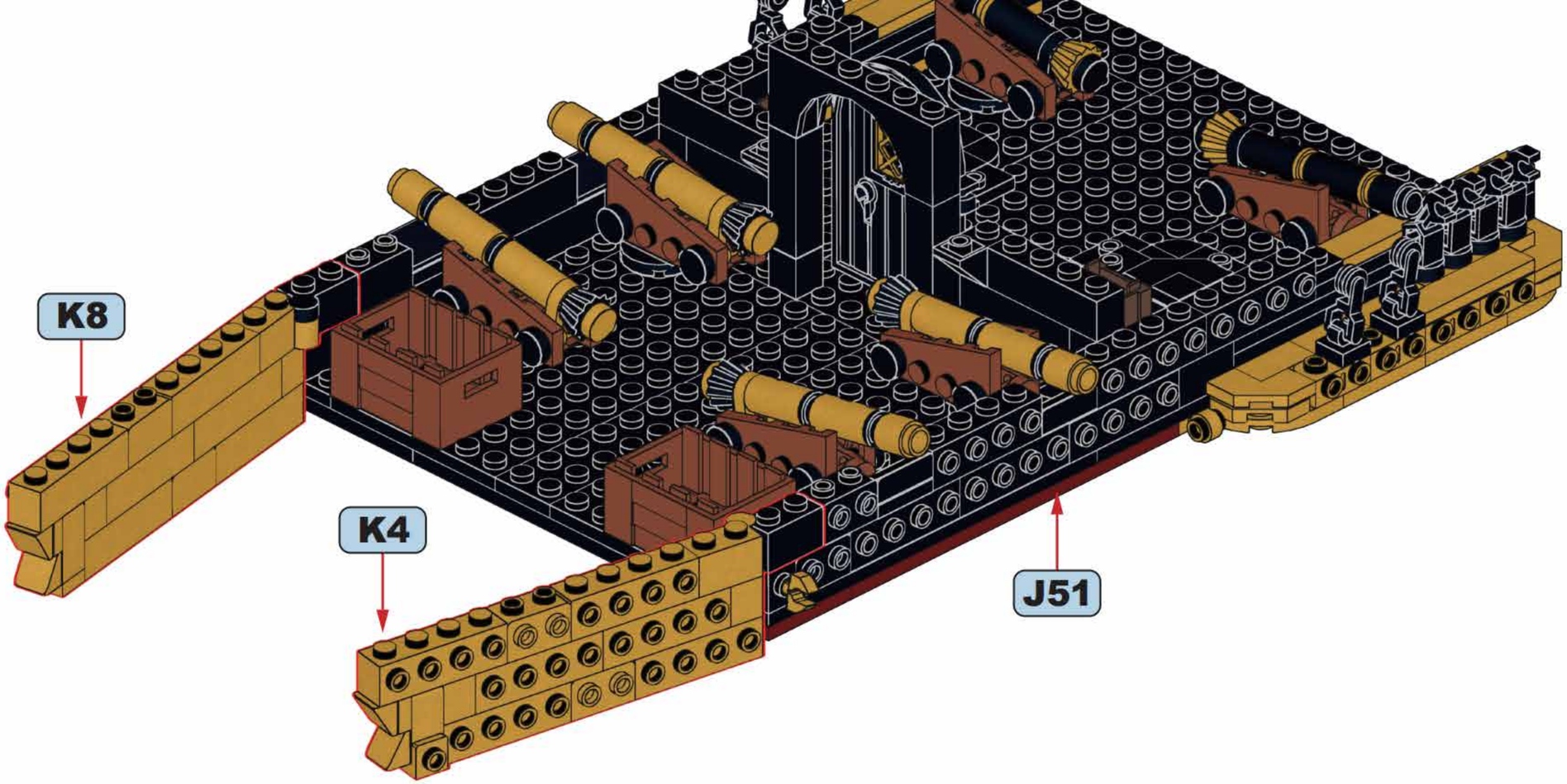

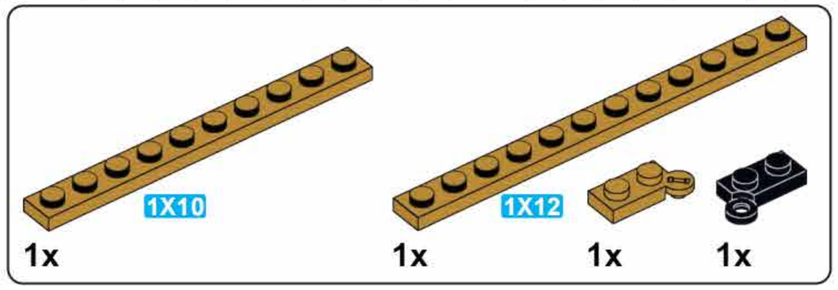

K10

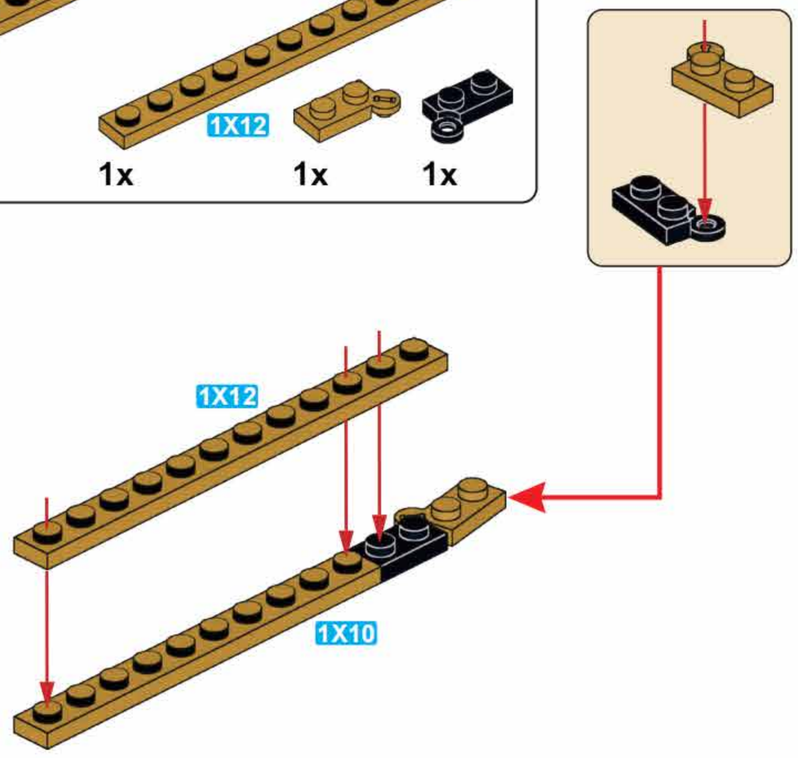

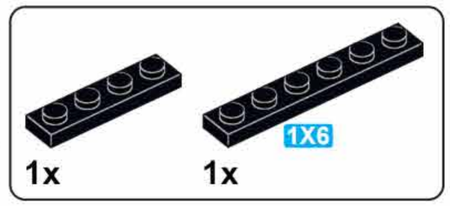

K11

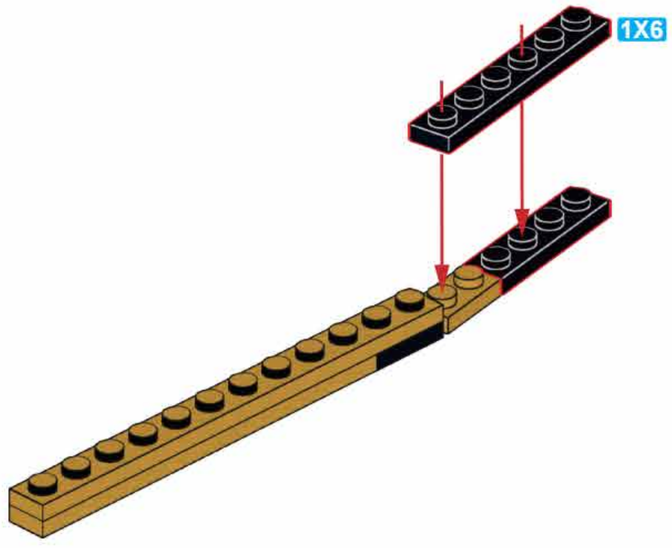

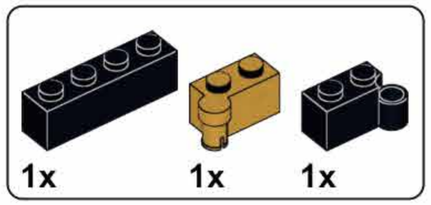

K12

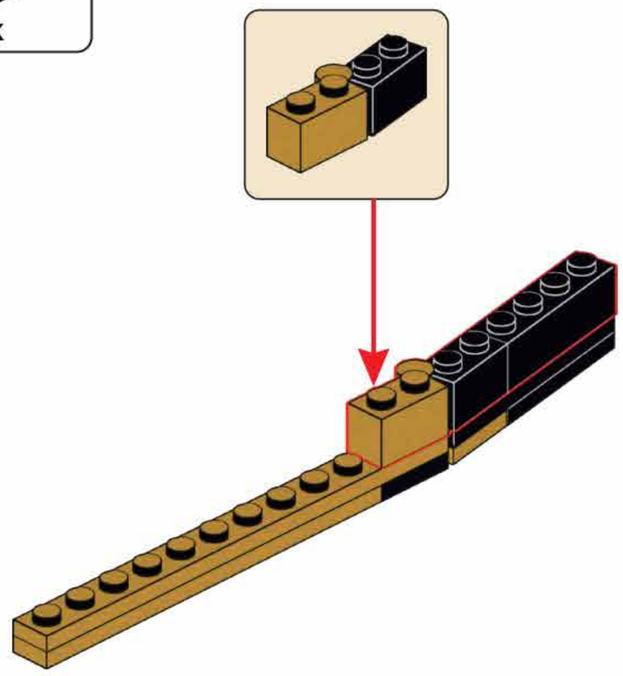

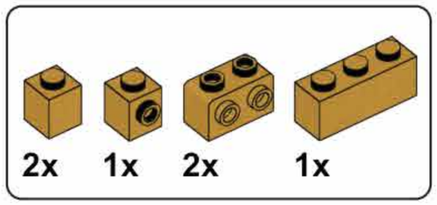

K13

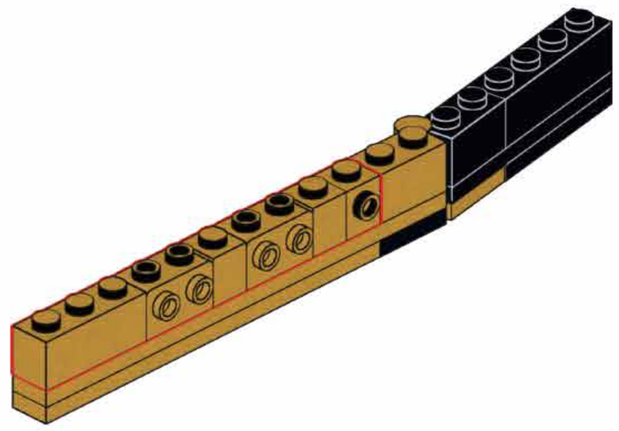

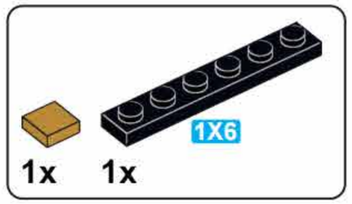

K14

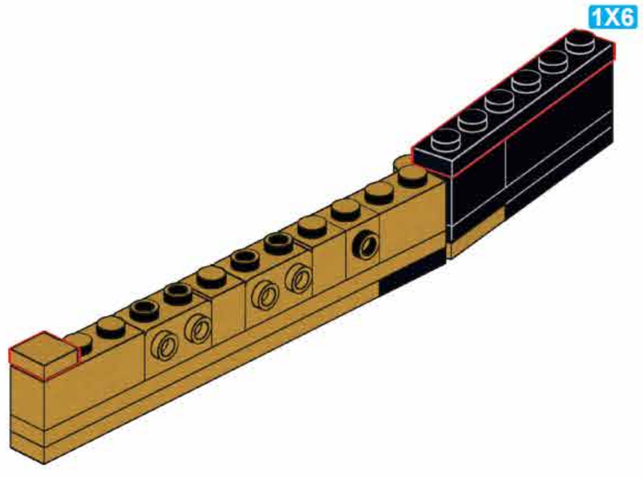

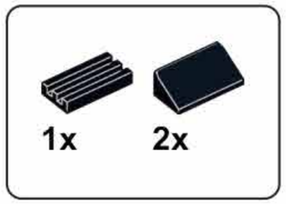

K15

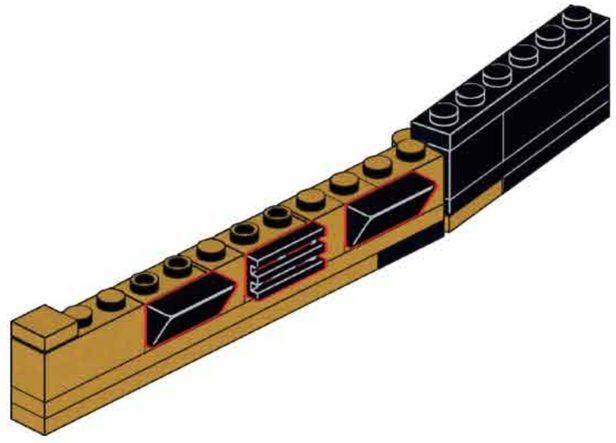

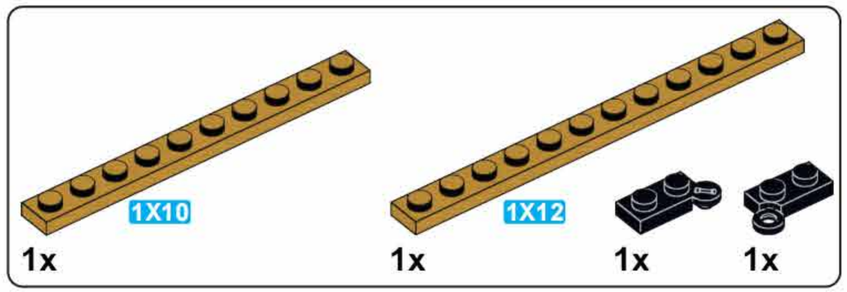

K16

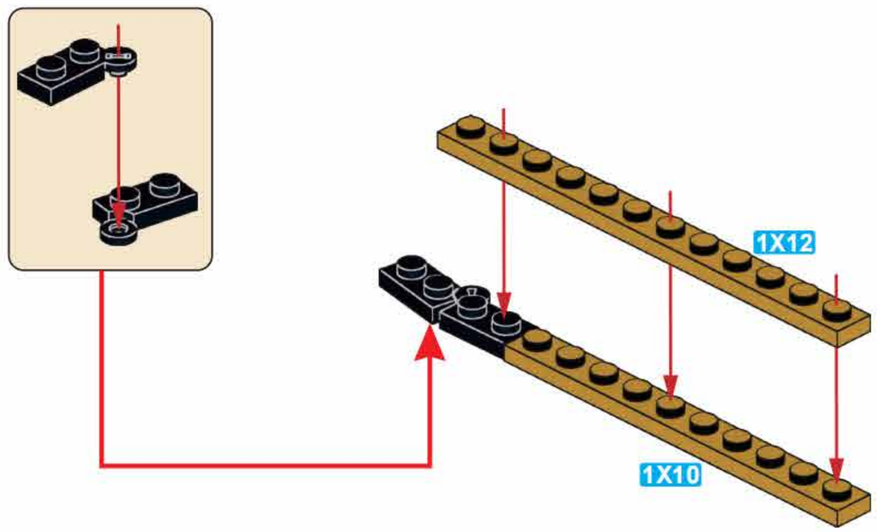

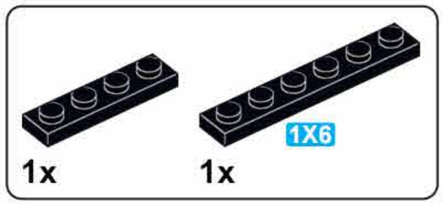

K17

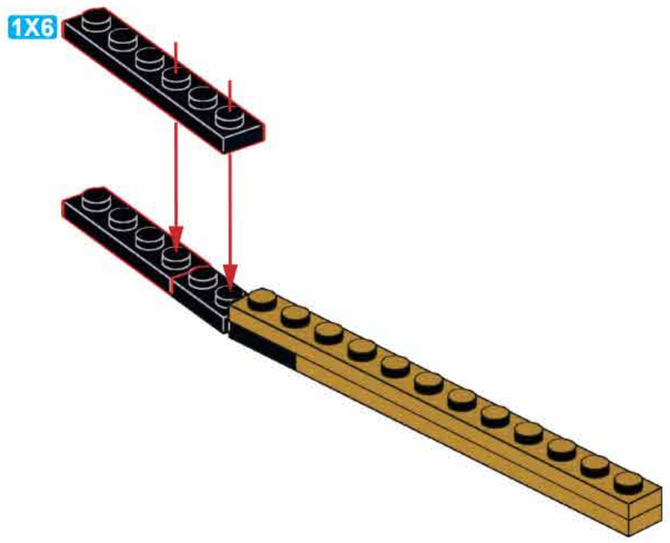

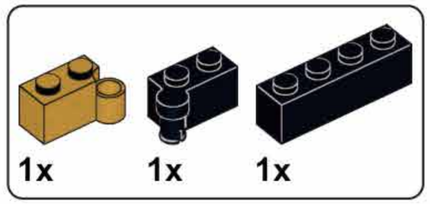

K18

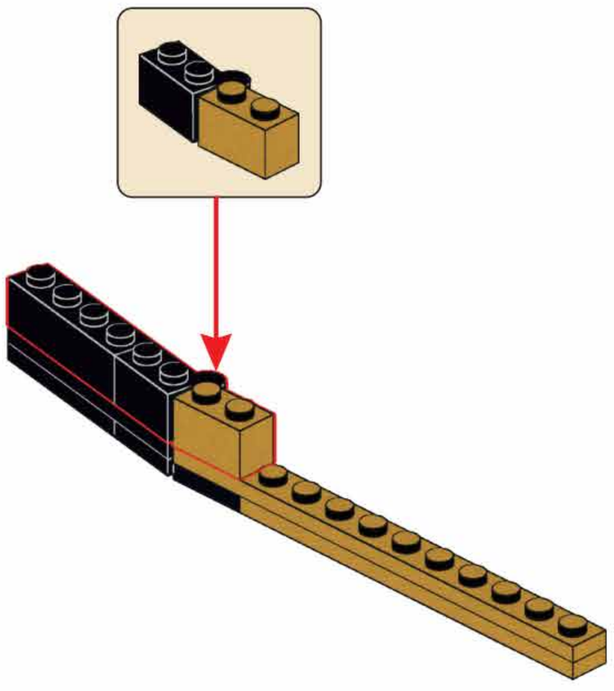

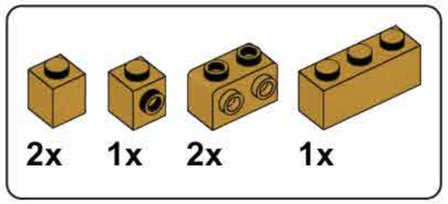

K19

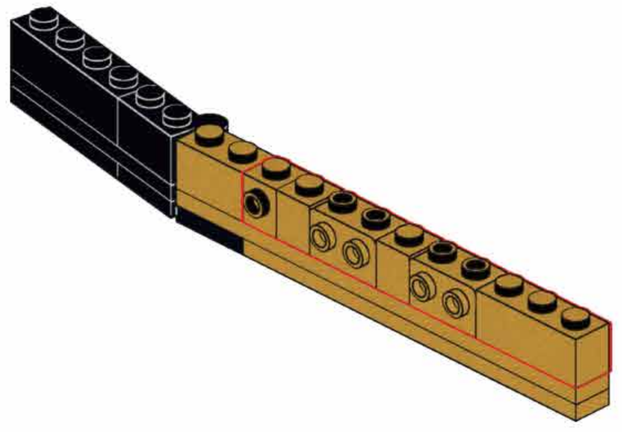

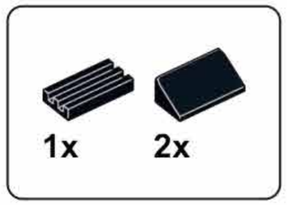

K20

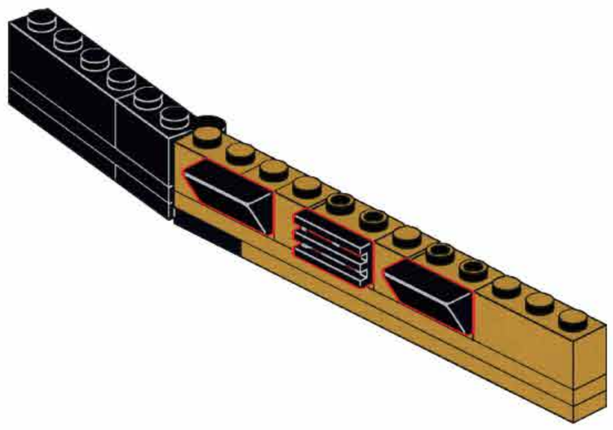

K21

K22

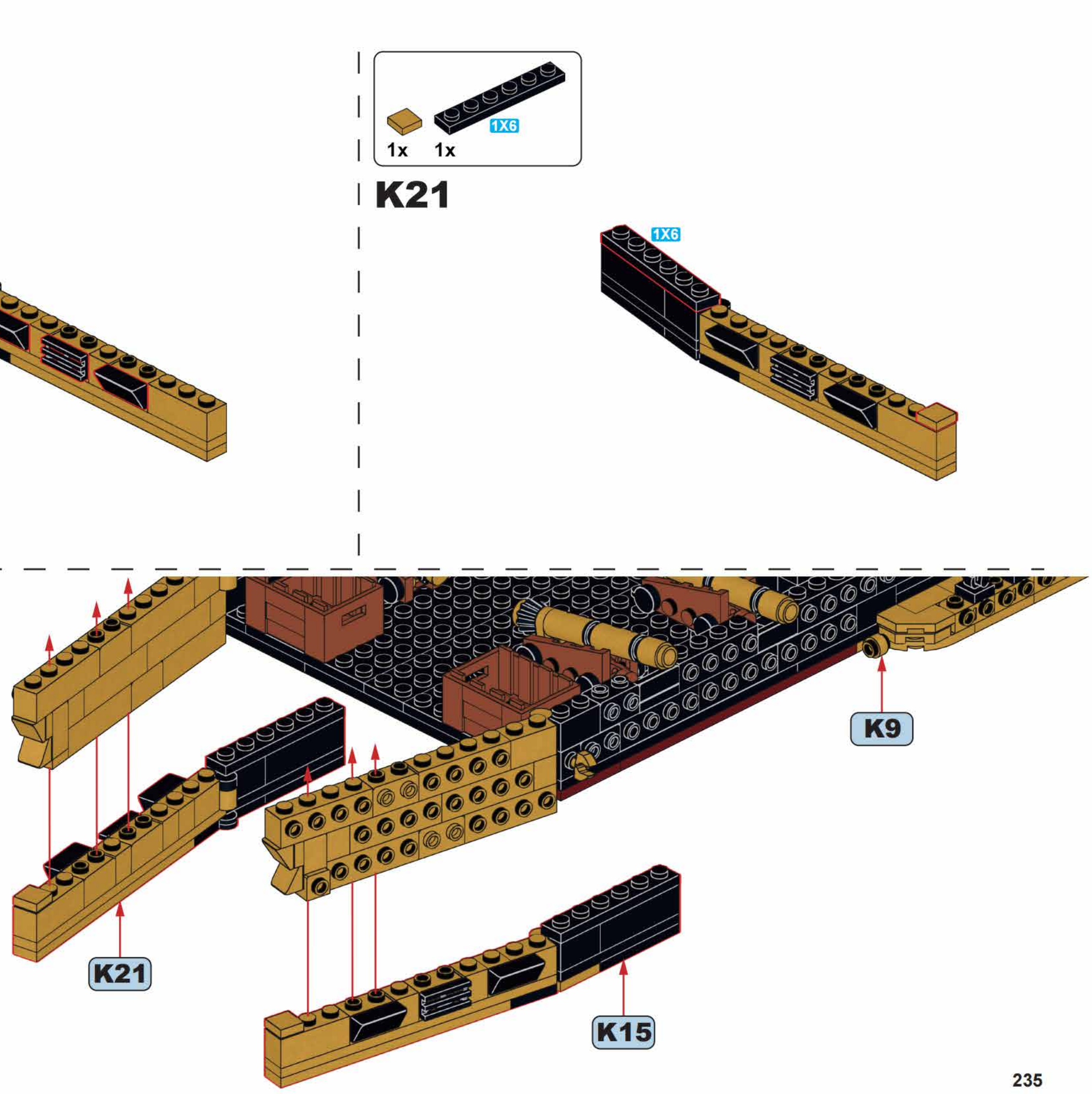

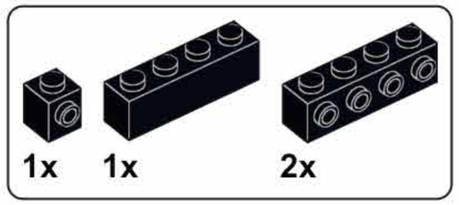

K23

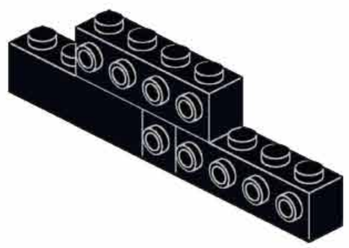

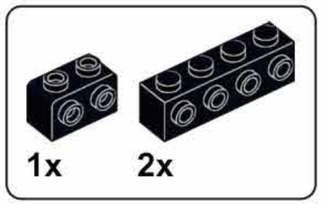

K24

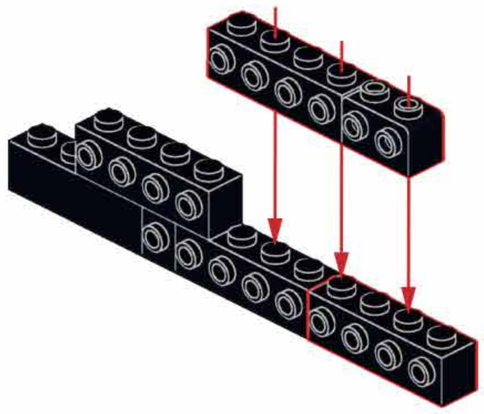

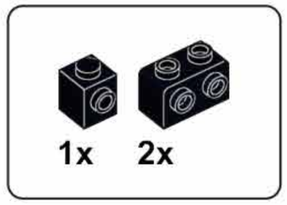

K25

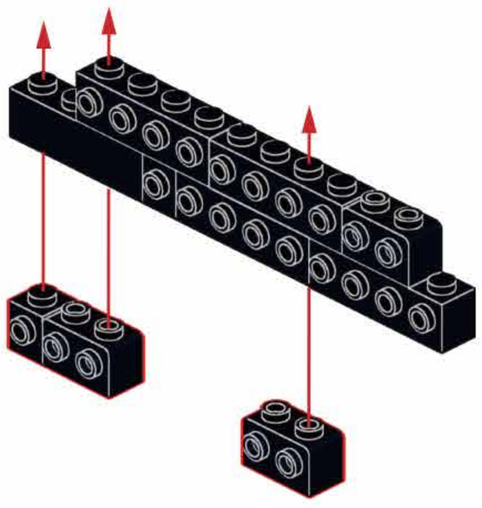

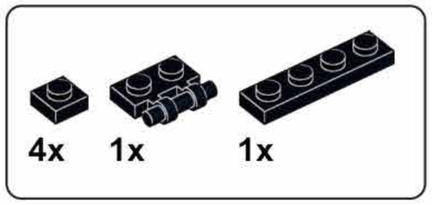

K26

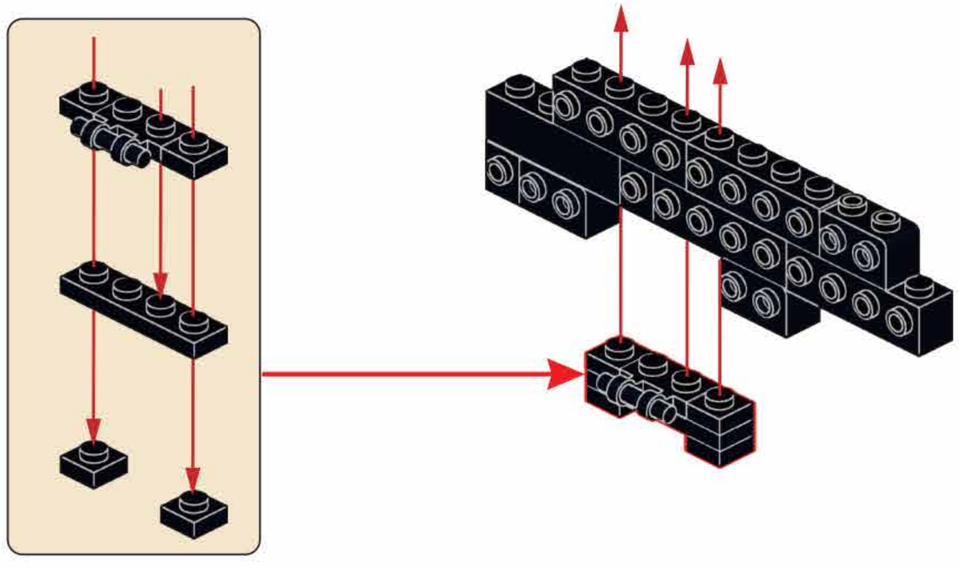

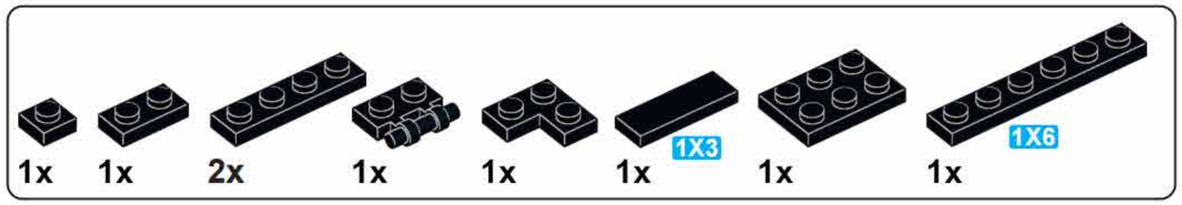
1x
1x
2x
1x
1x
1x
1X3
1x
1x
1X6

K27

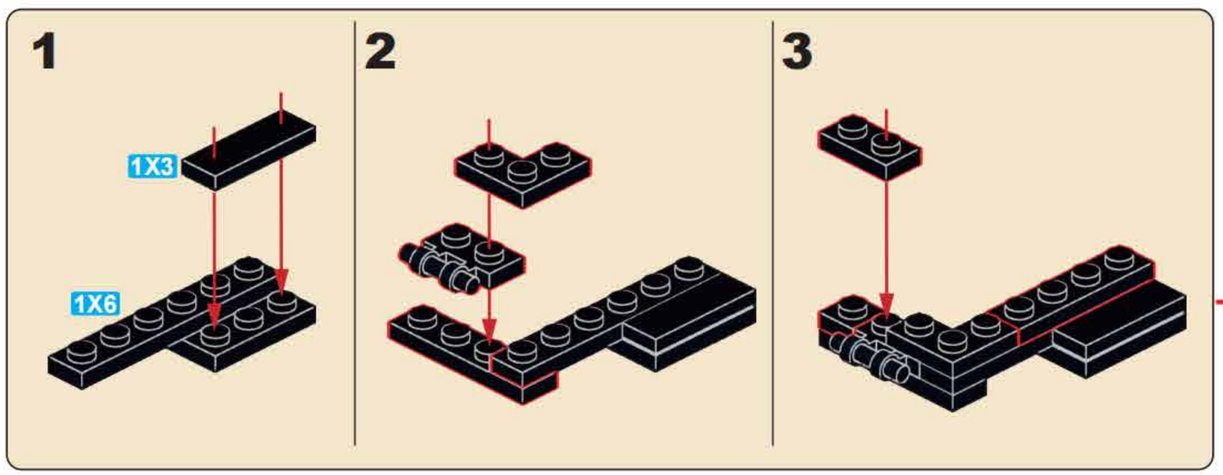
1
1X3
1X6
2
3

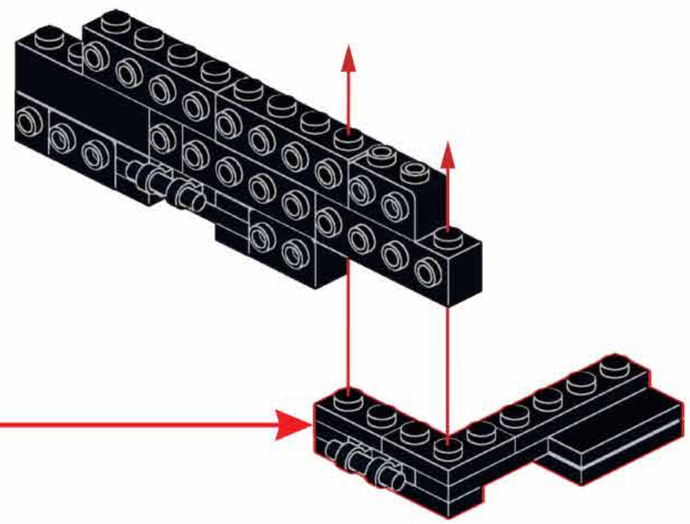

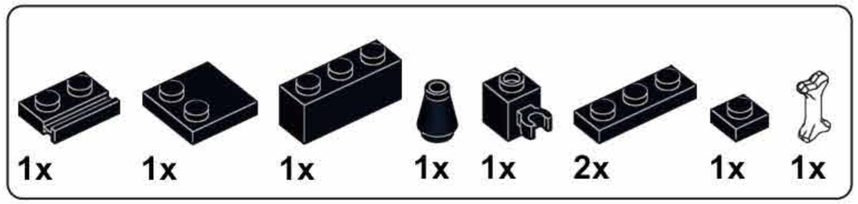
1x
1x
1x
1x
1x
2x
1x
1x

K28

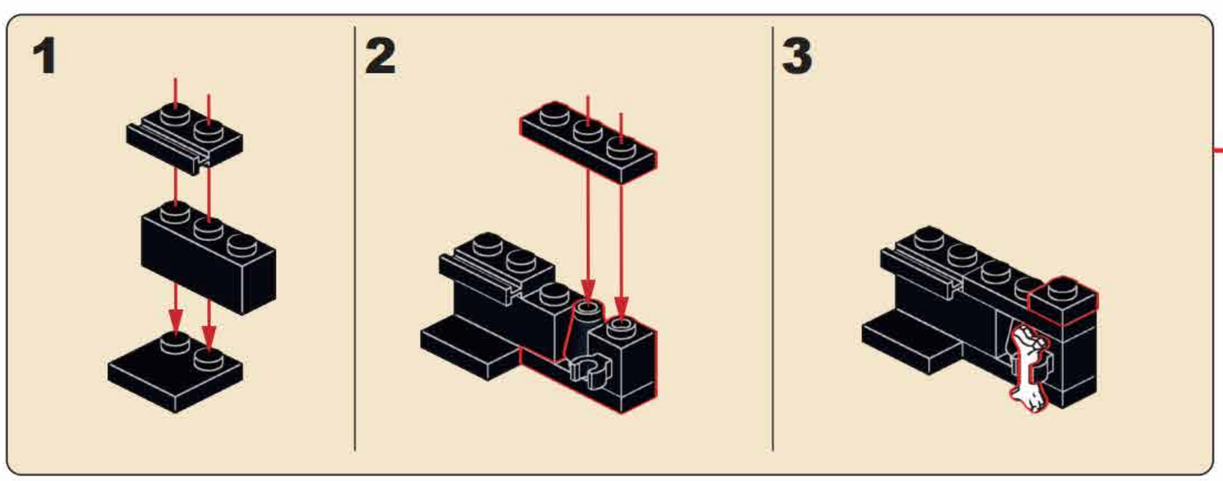
1
2
3

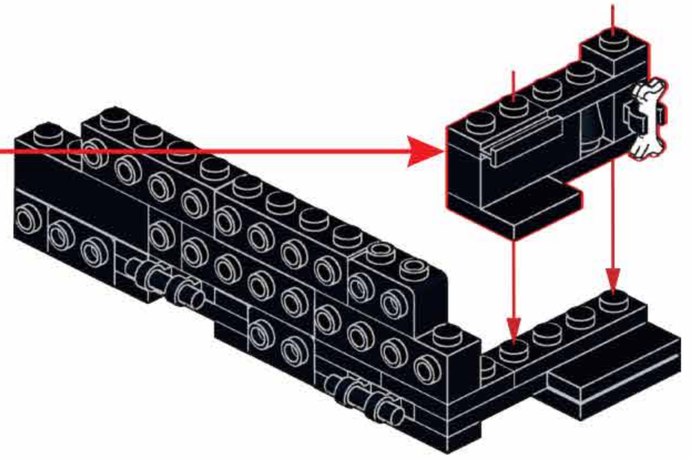

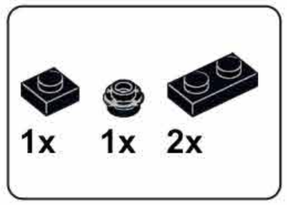

K29

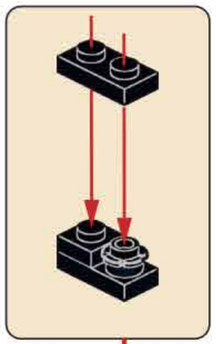

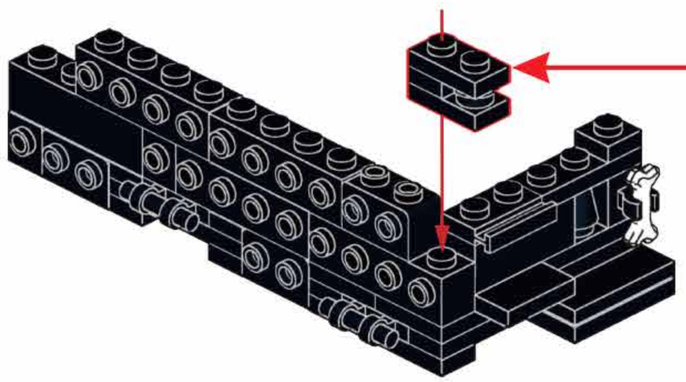

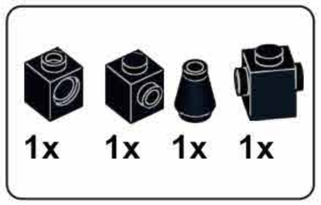

K30

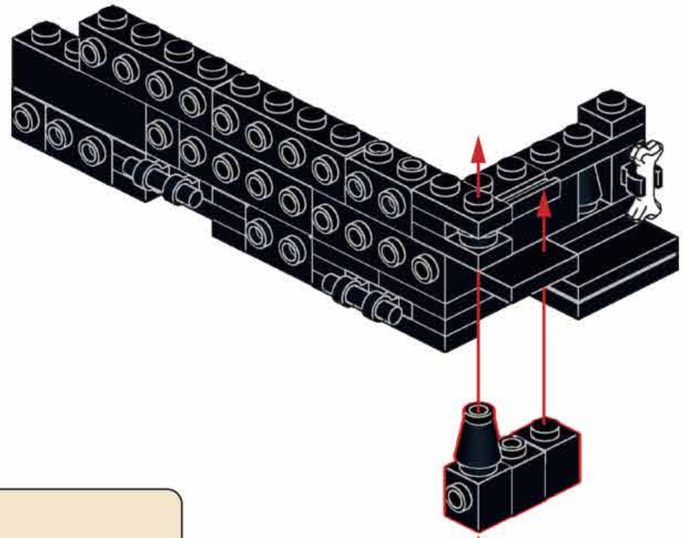

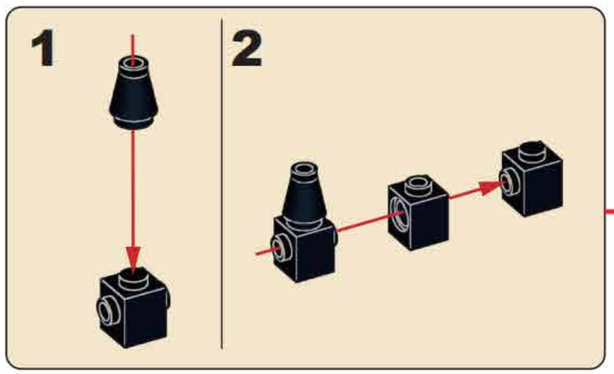

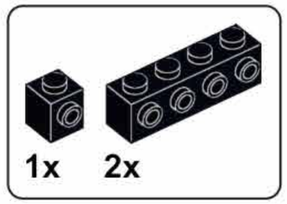

K31

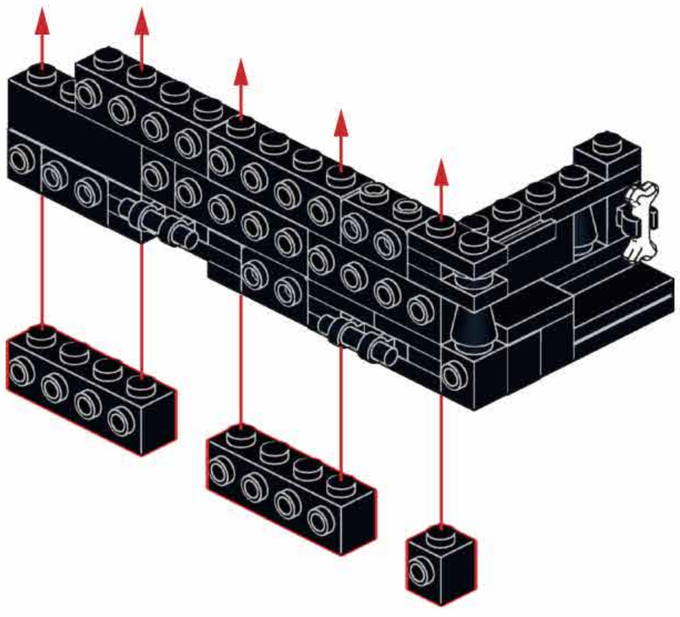

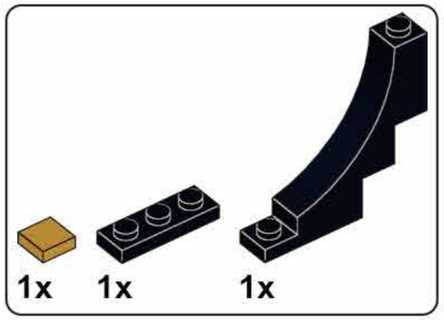

K32

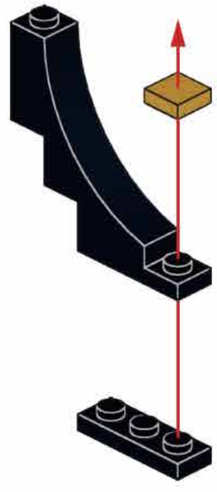

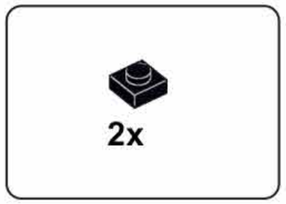

K33

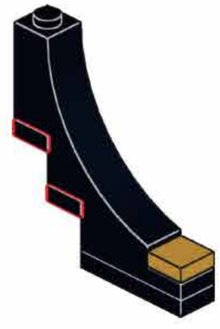

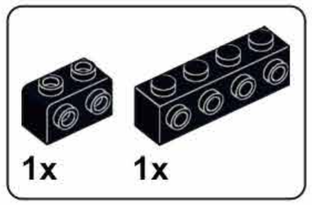

K34

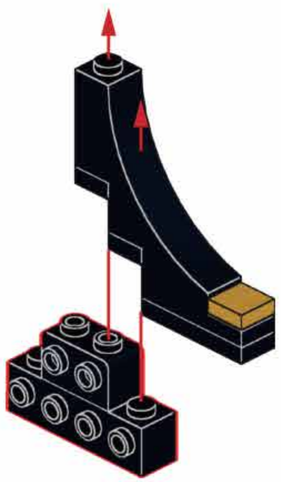

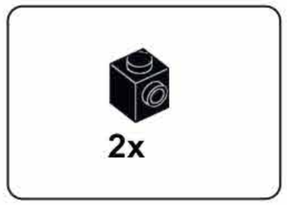

K35

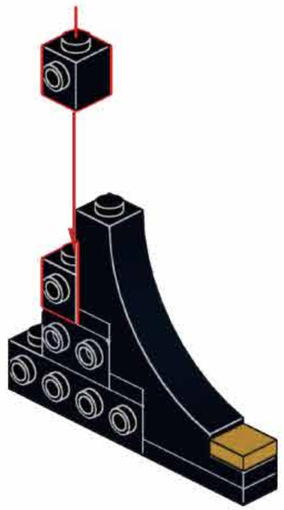

K36

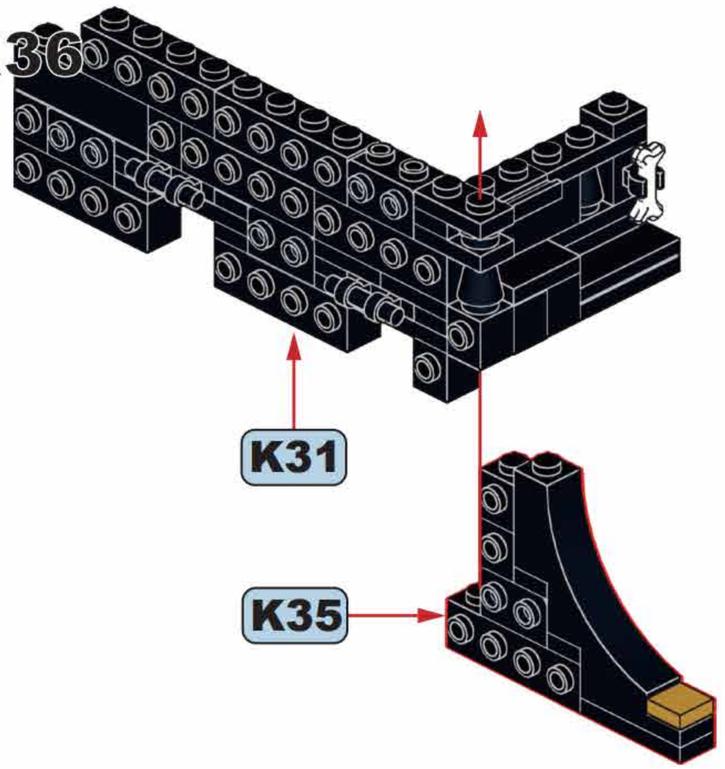

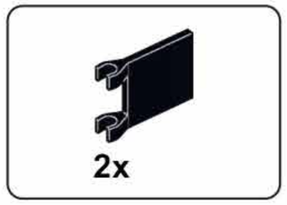

K37

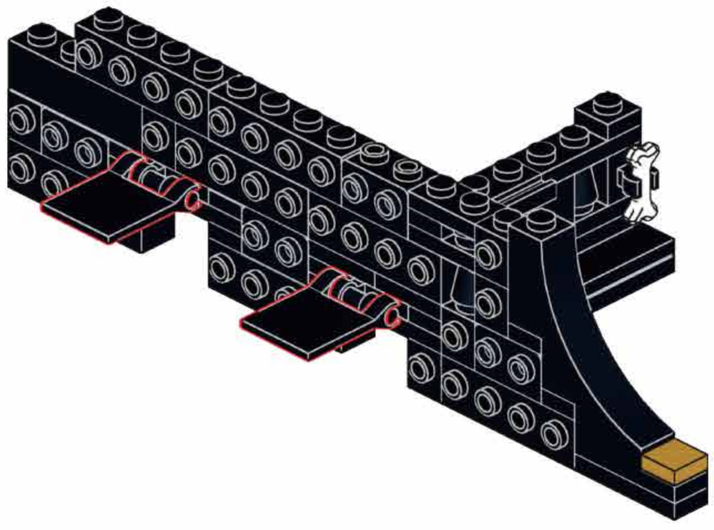

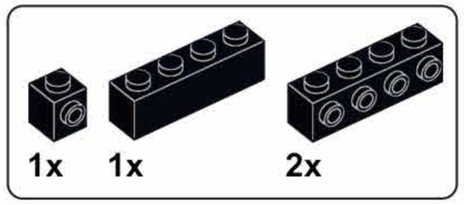

K38

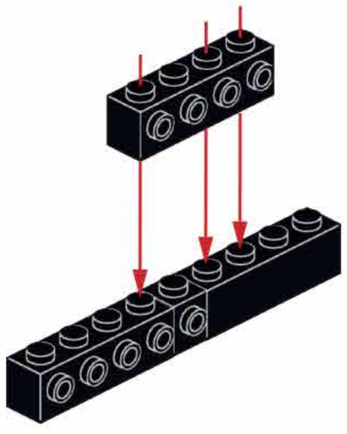

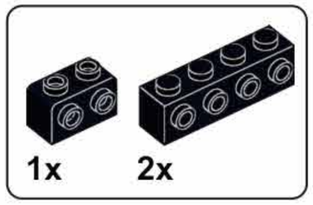

K39

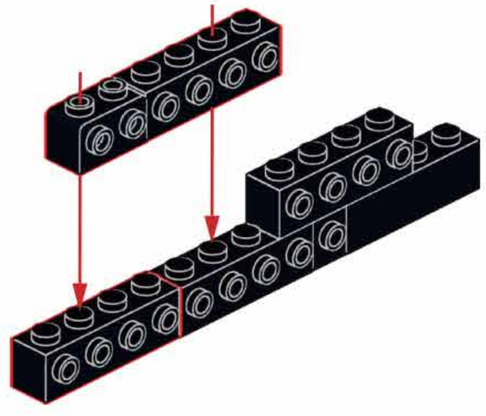

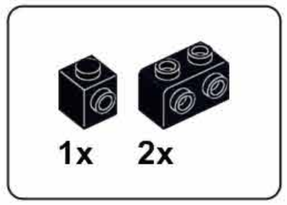

K40

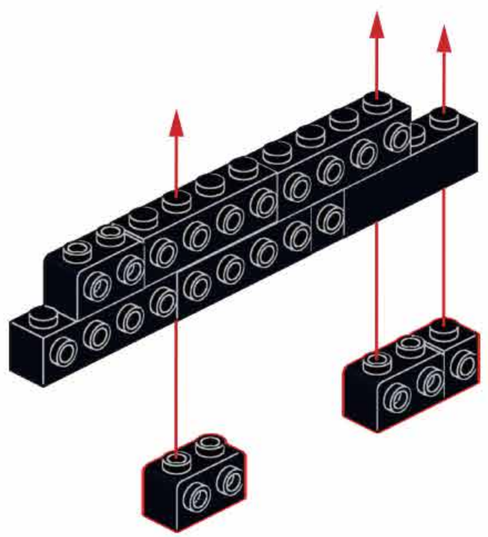

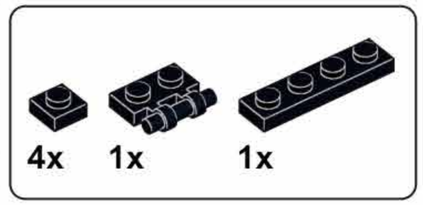

K41

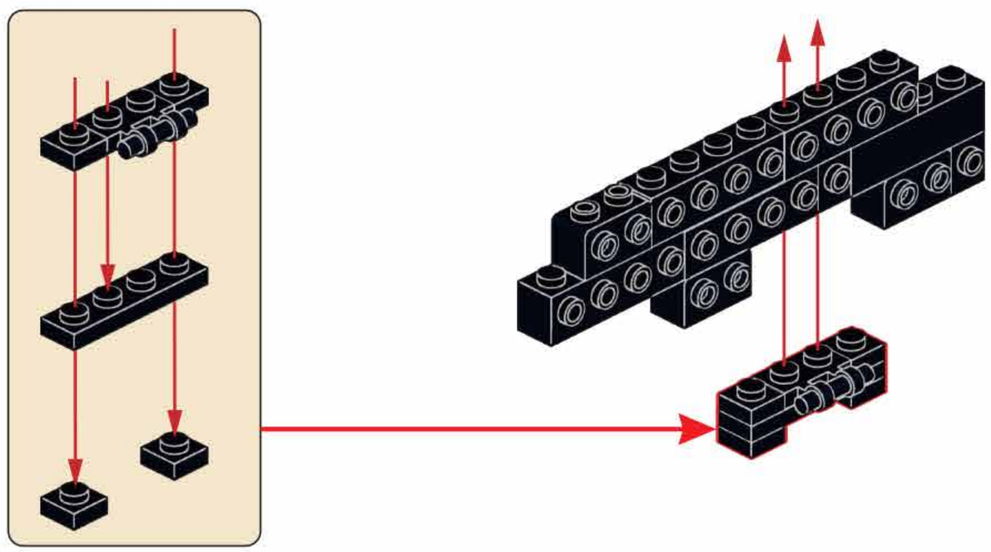

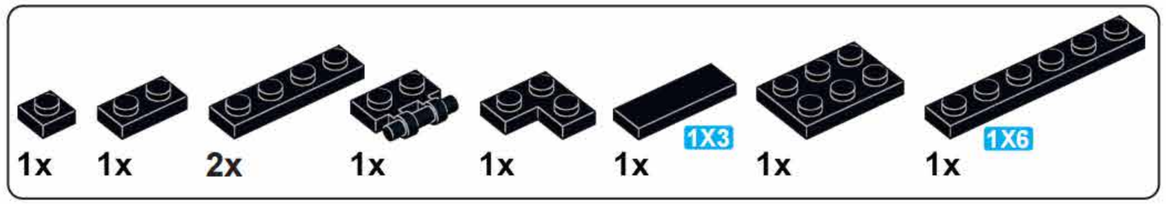

K42

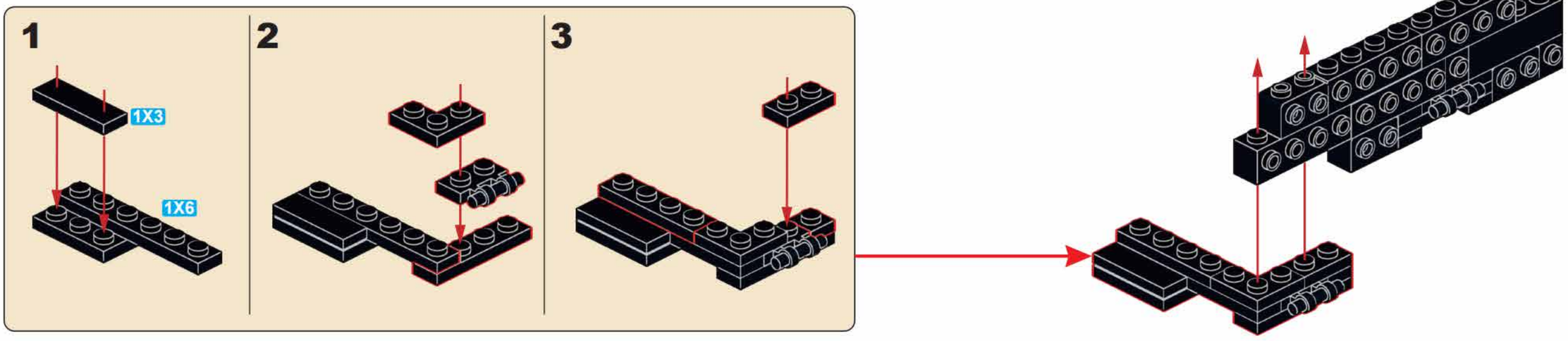

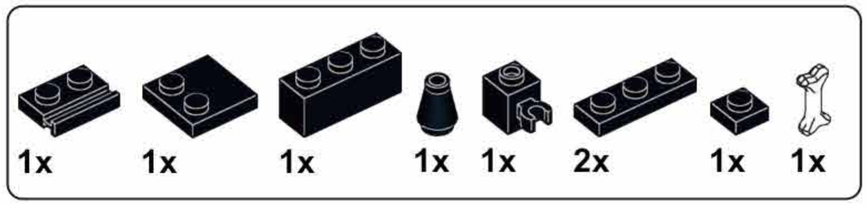

K43

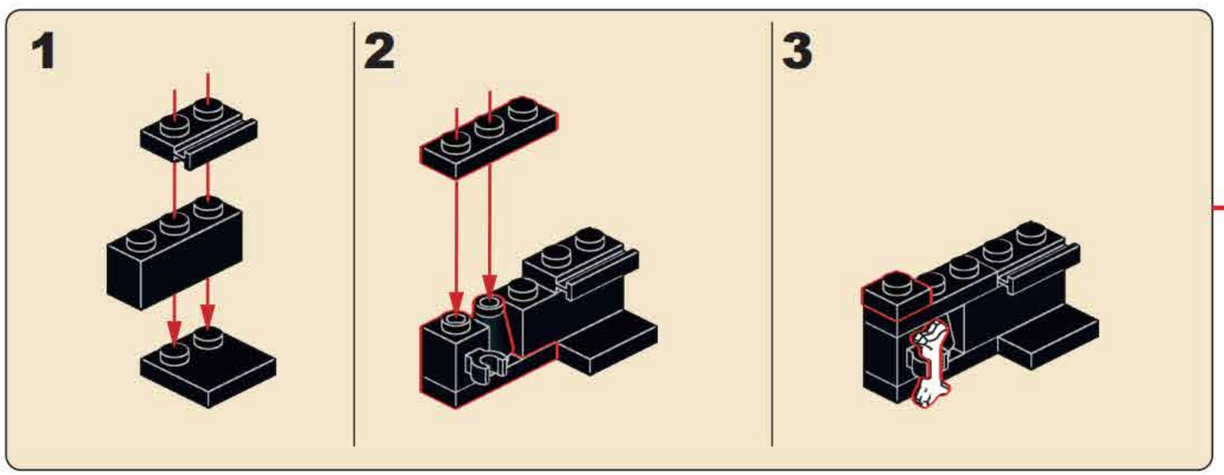

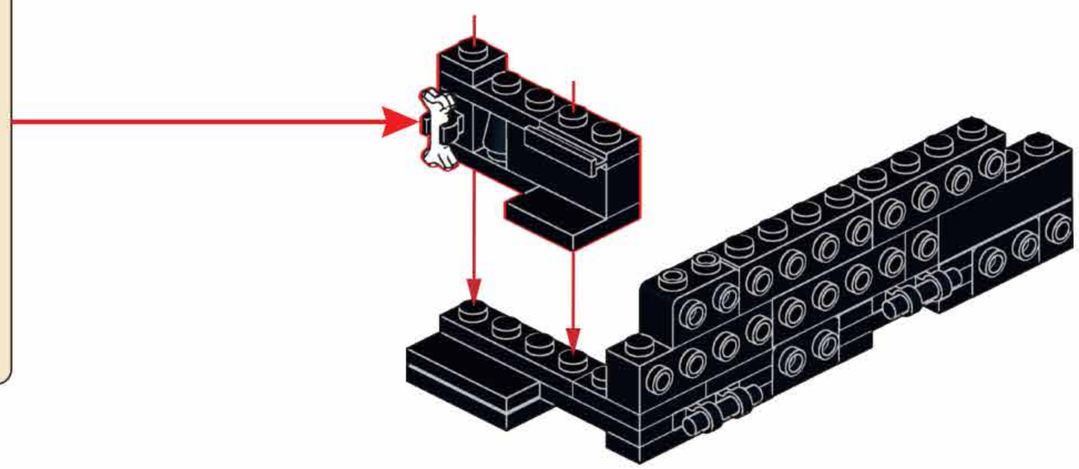

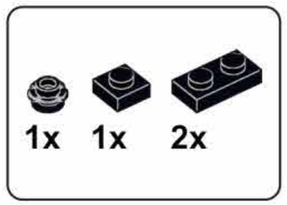

K44

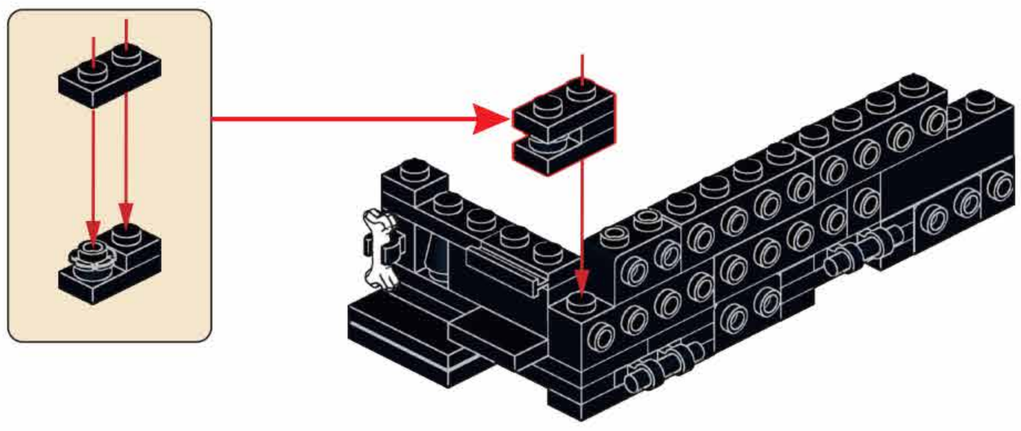

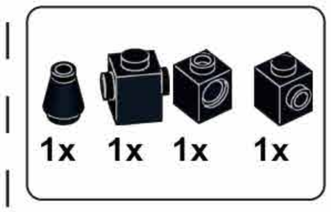

K45

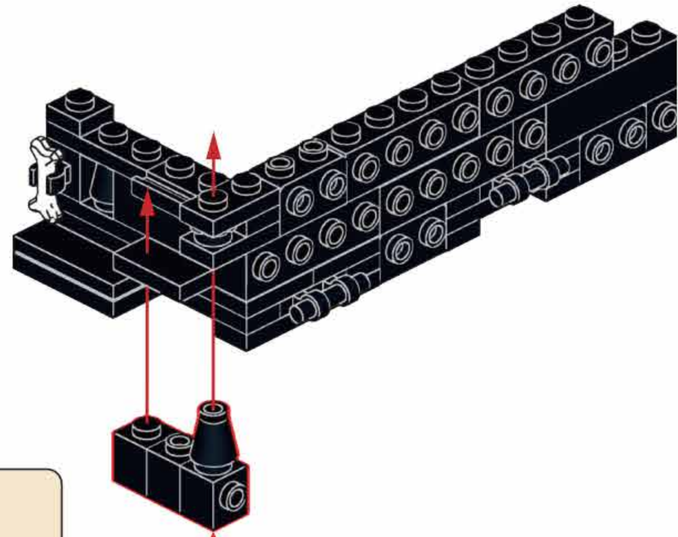

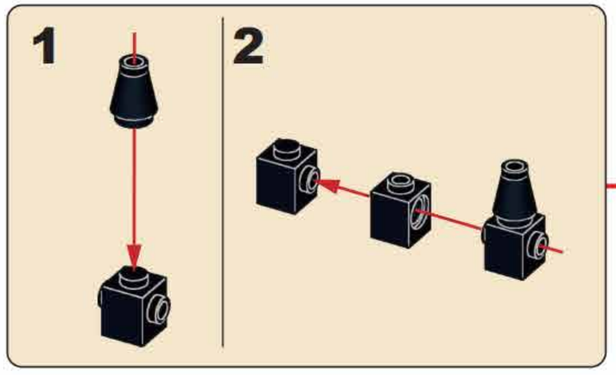

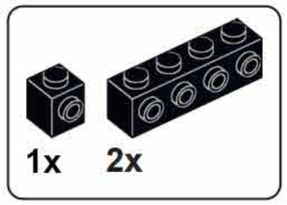

K46

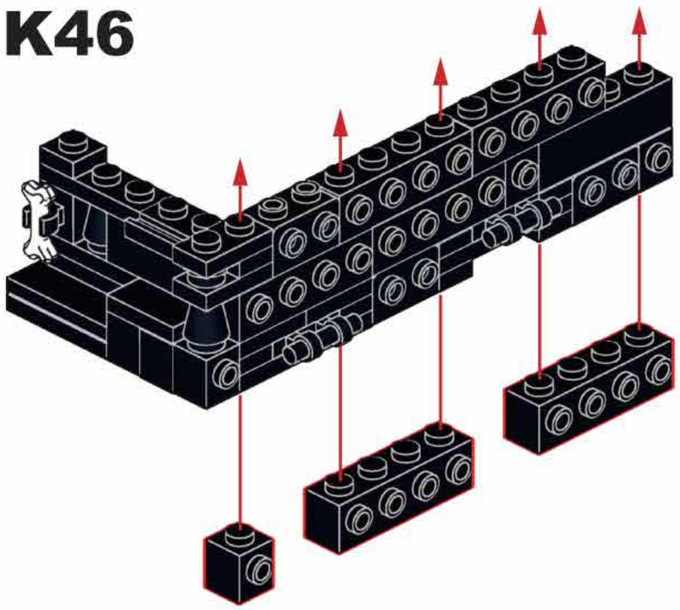

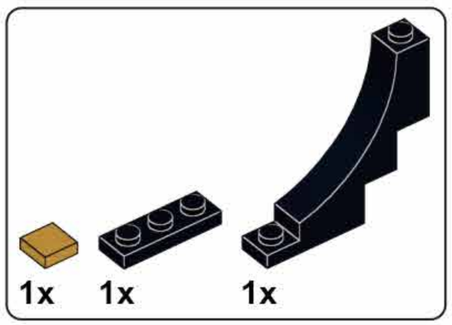

K47

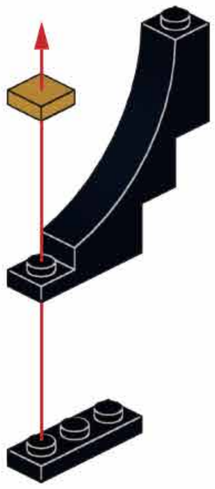

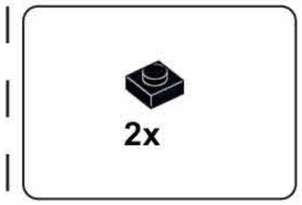

K48

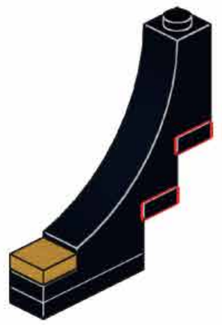

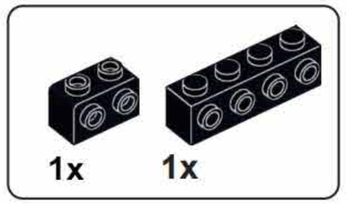

K49

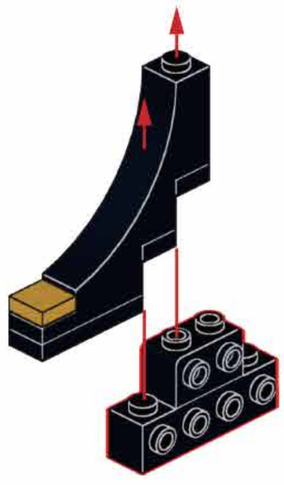

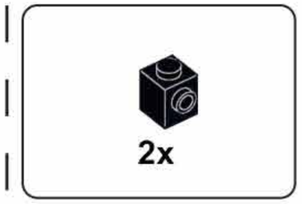

K50

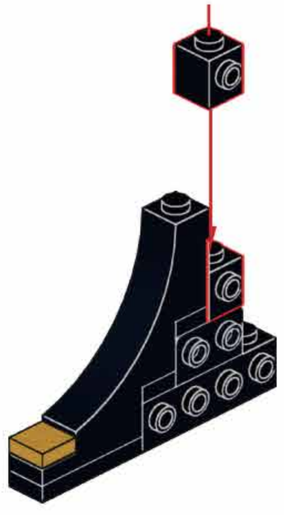

K51

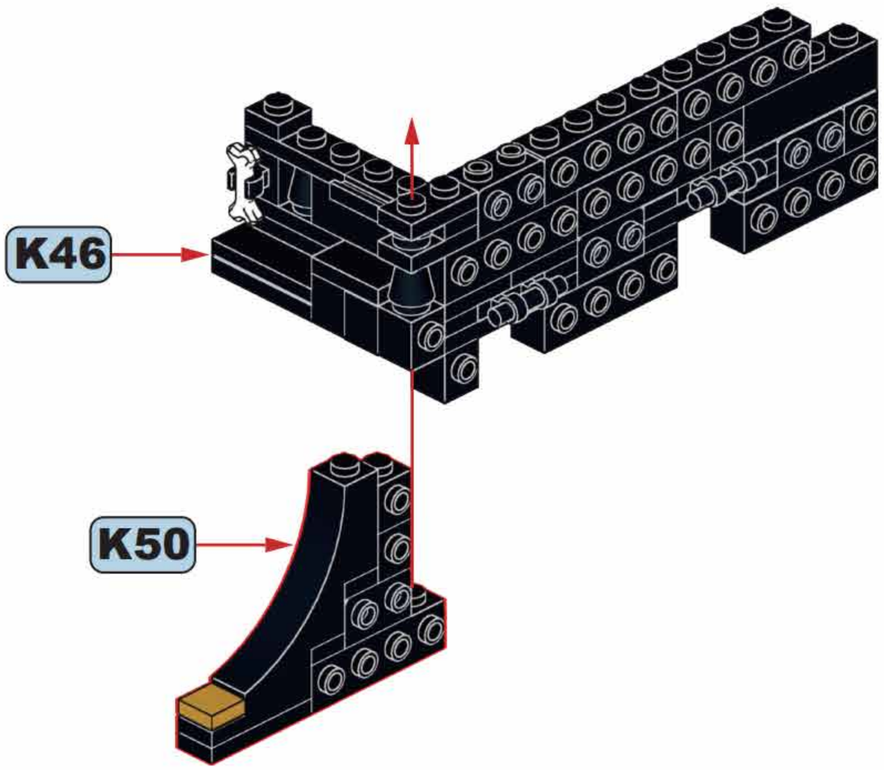

K52

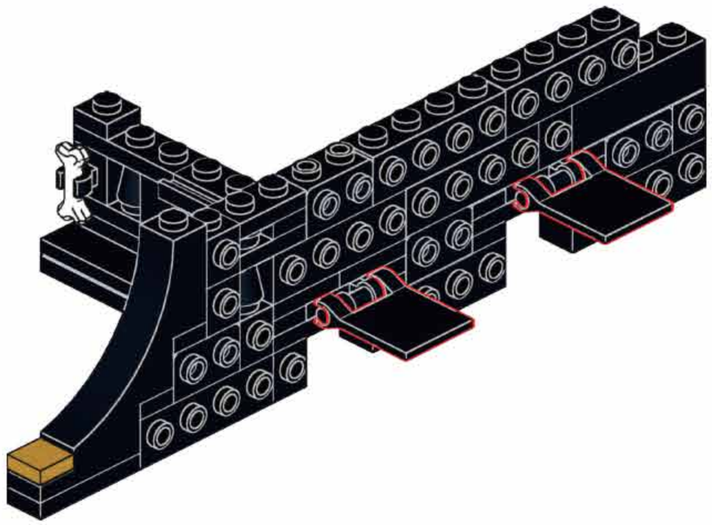

K53

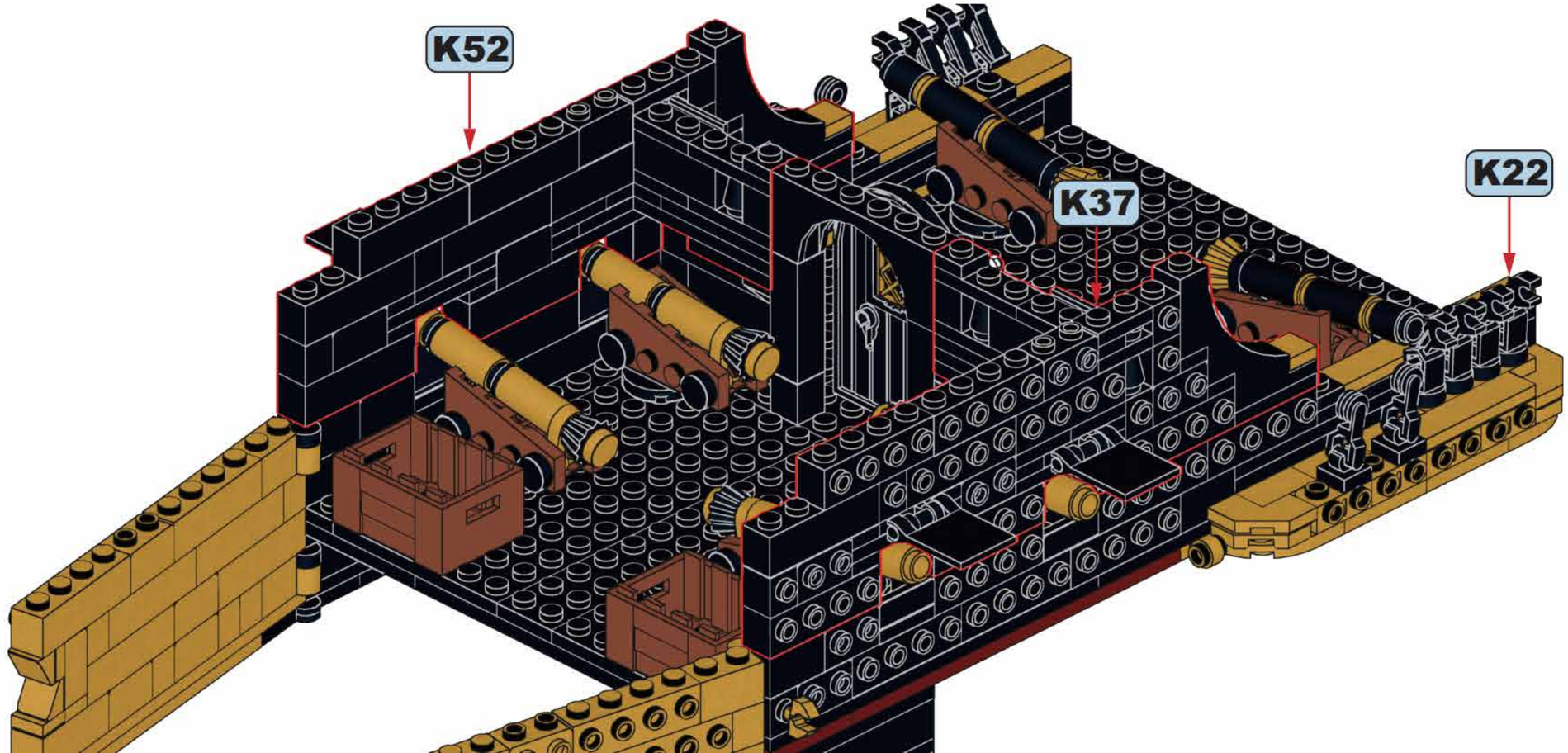

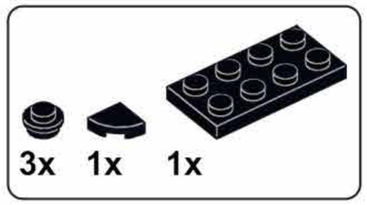

K54

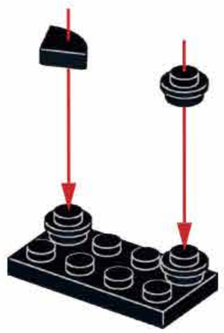

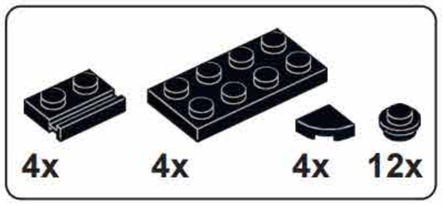

K55

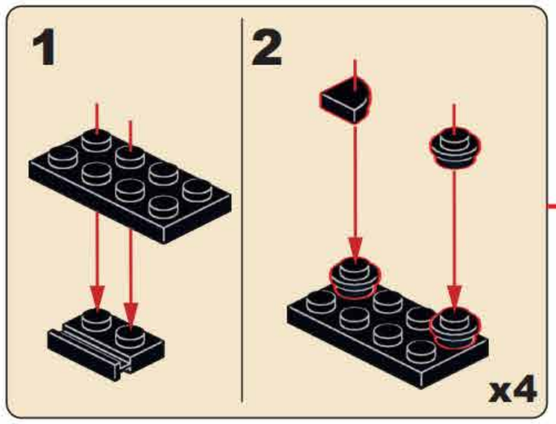

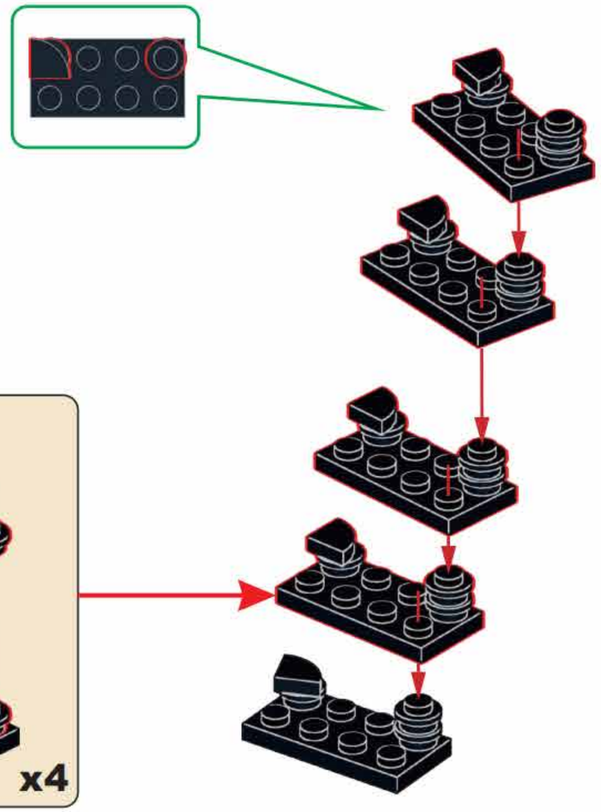

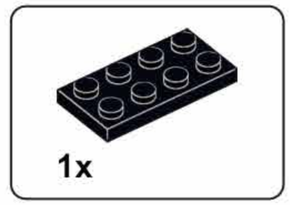

K56

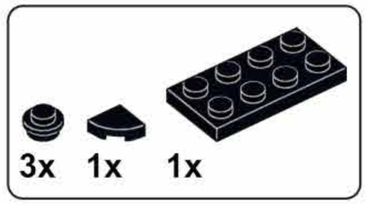

K57

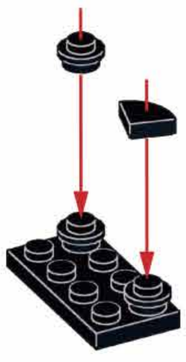

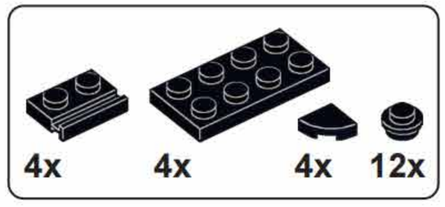

K58

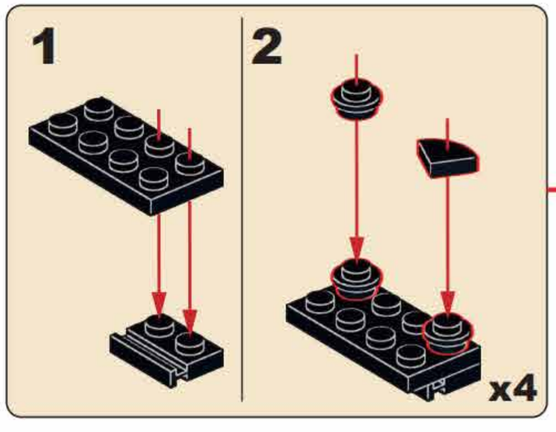

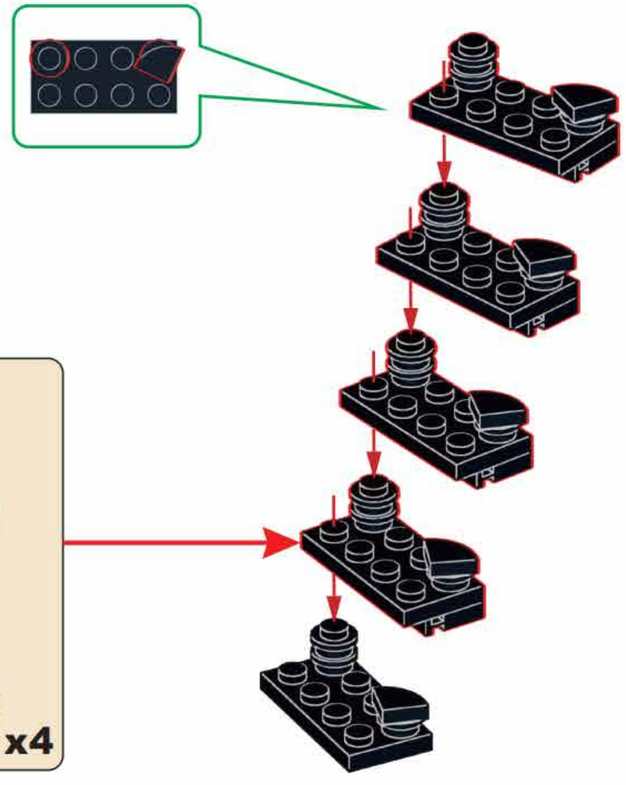

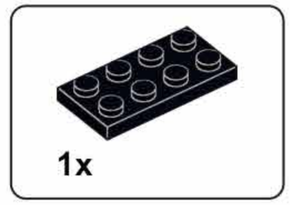

K59

K60

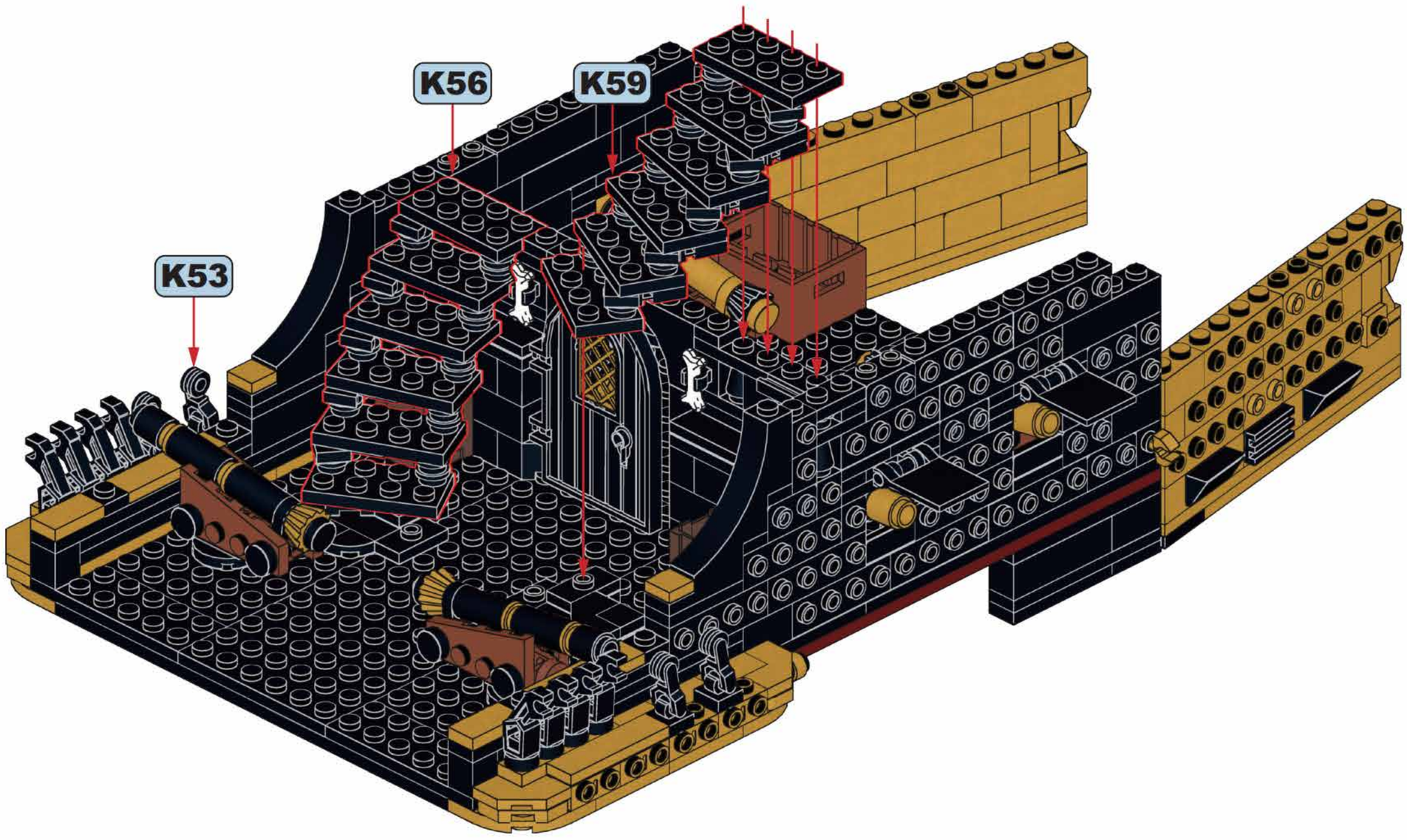

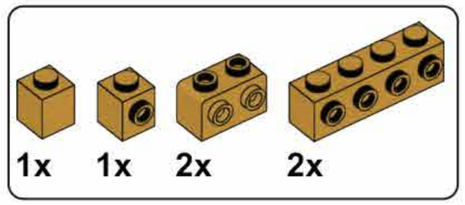

K61

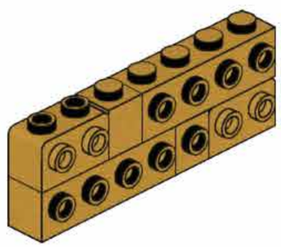

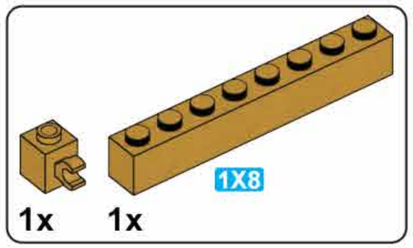

K62

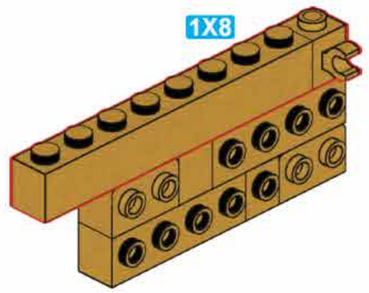

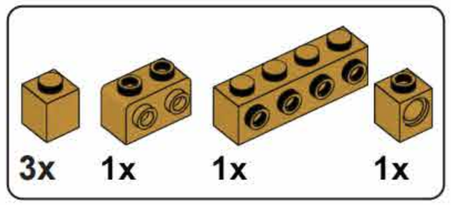

K63

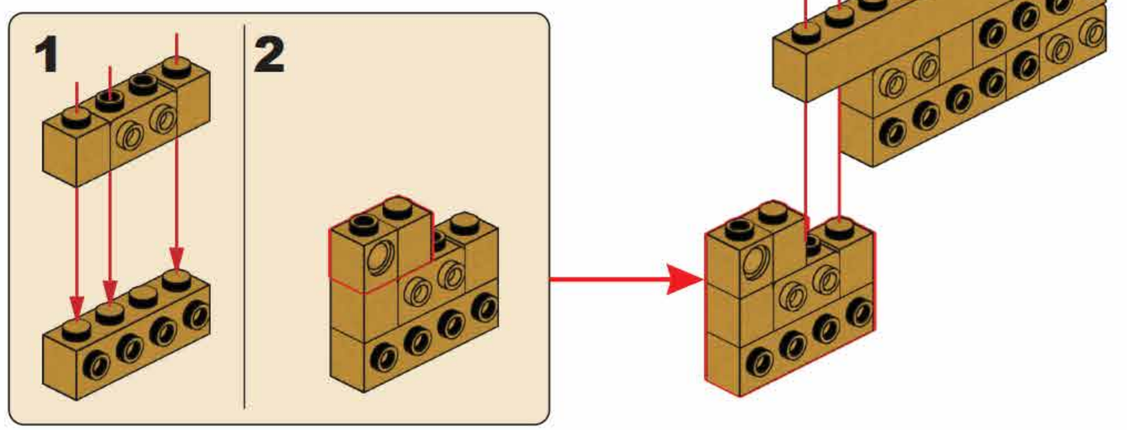

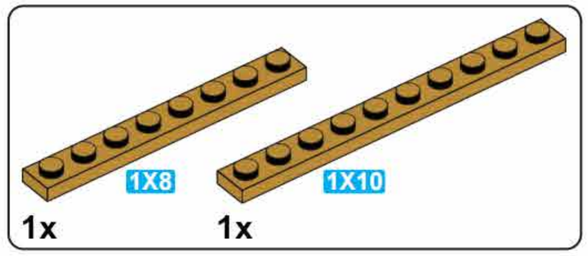

K64

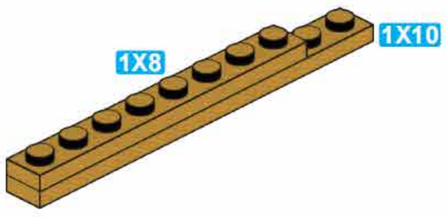

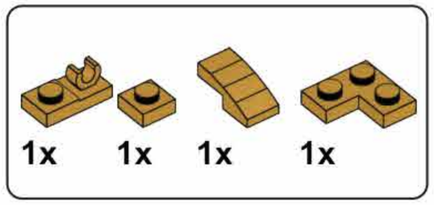

K65

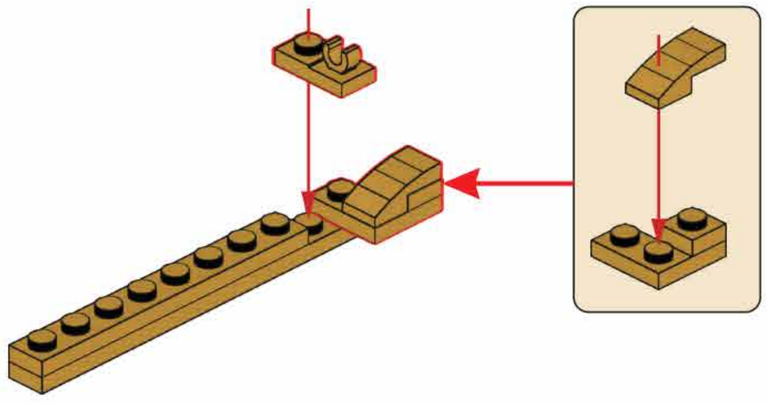

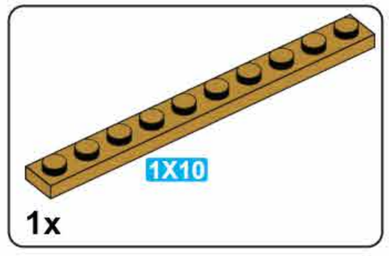

K66

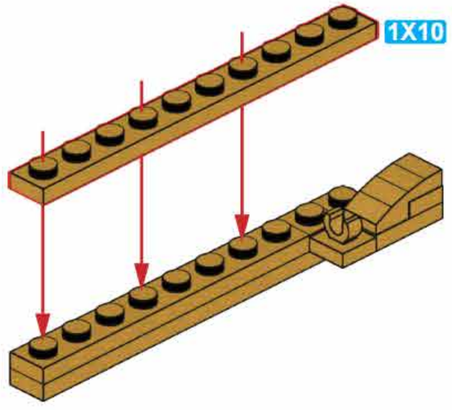

K67

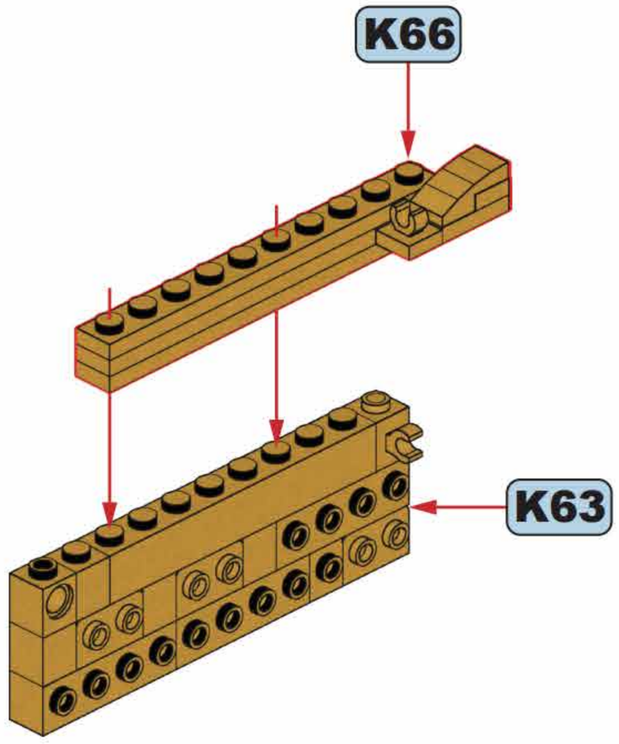

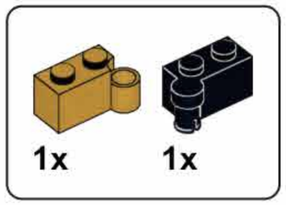

K68

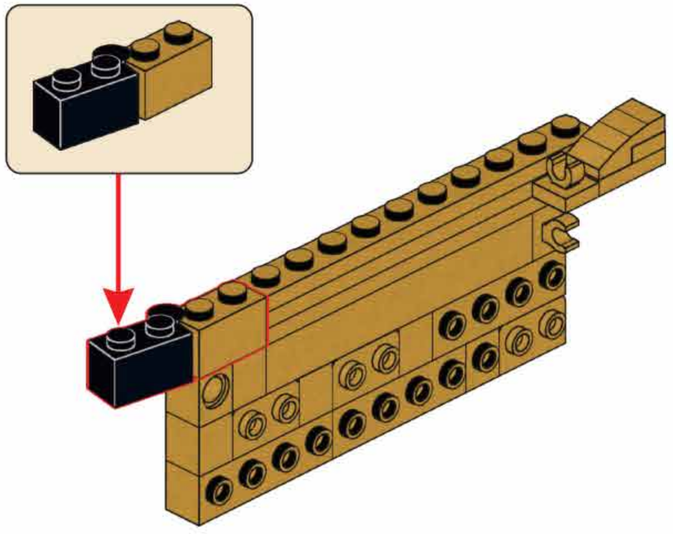

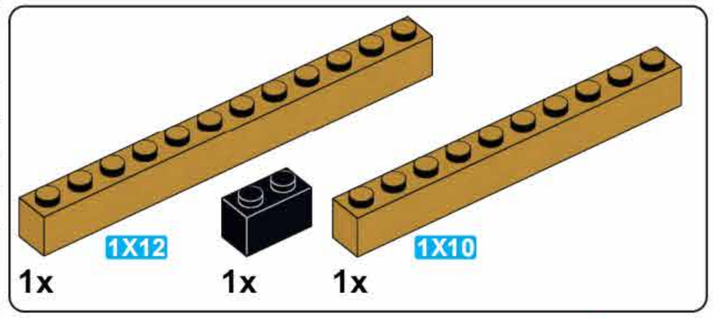

K69

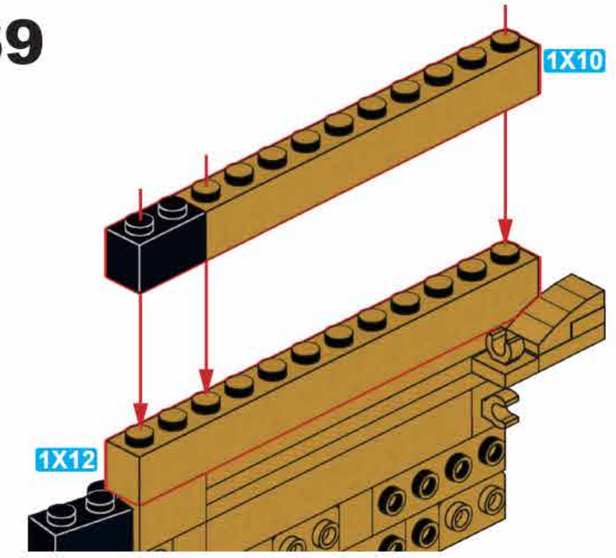

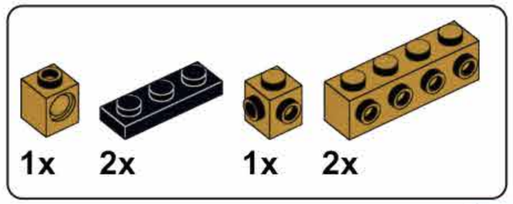

K70

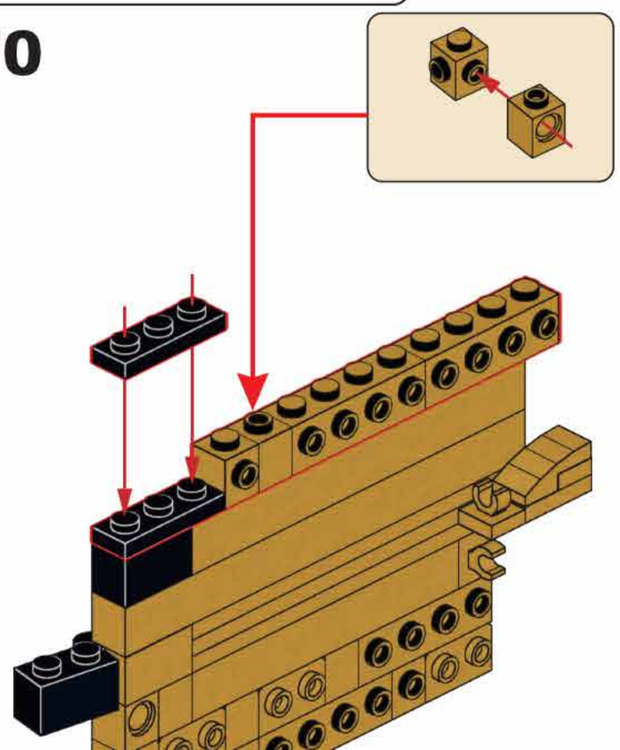

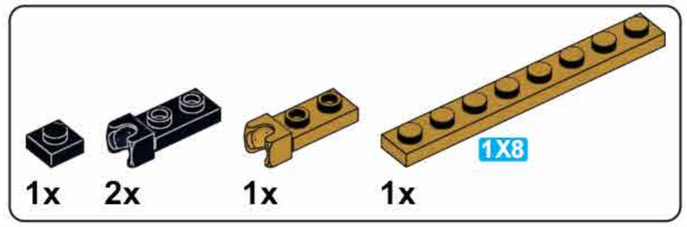

K71

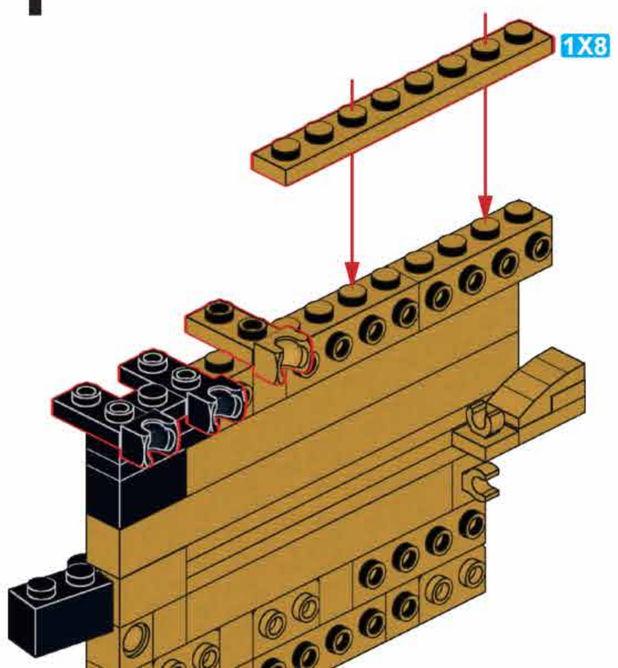

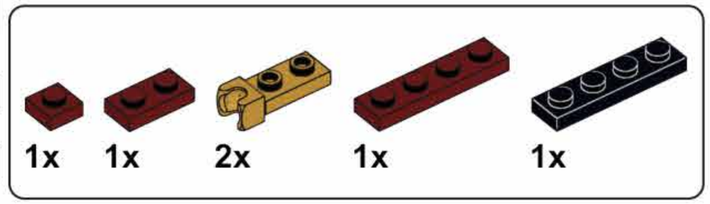

K72

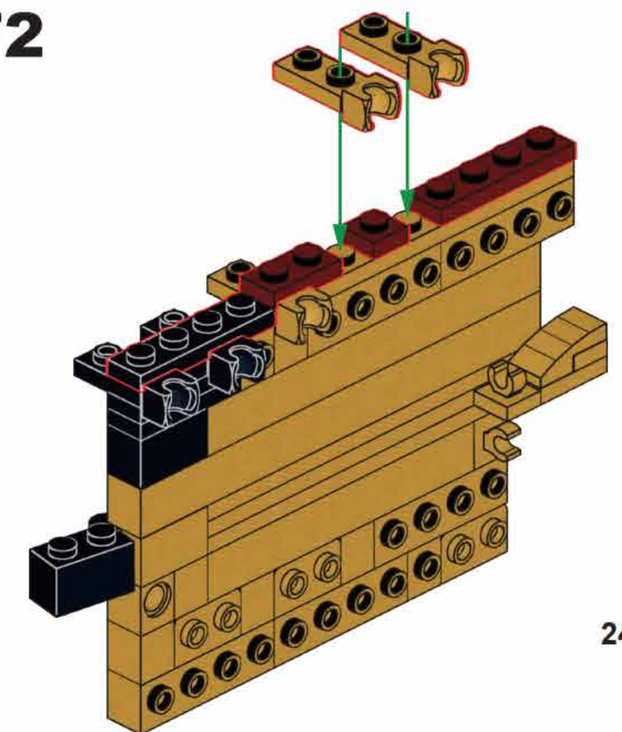

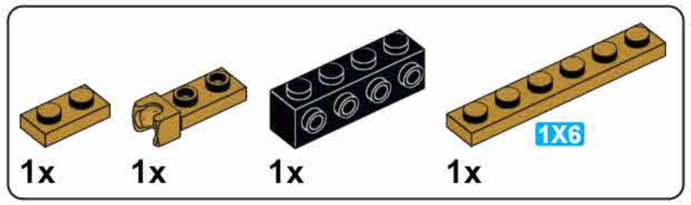

K73

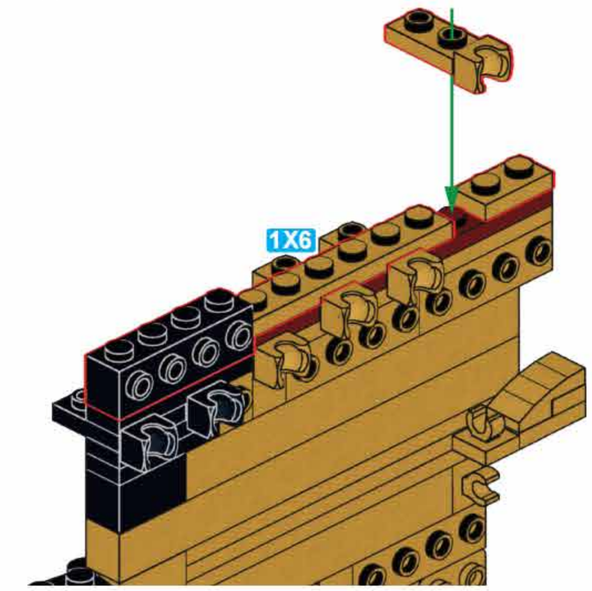

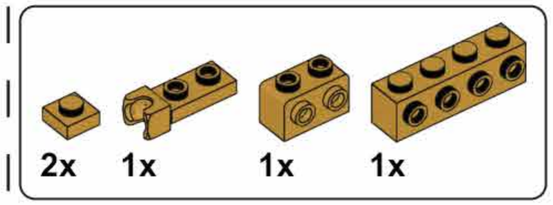

K74

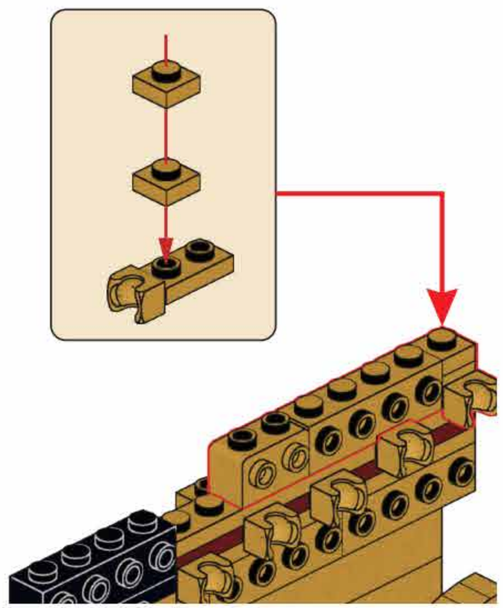

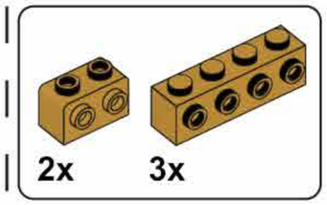

K75

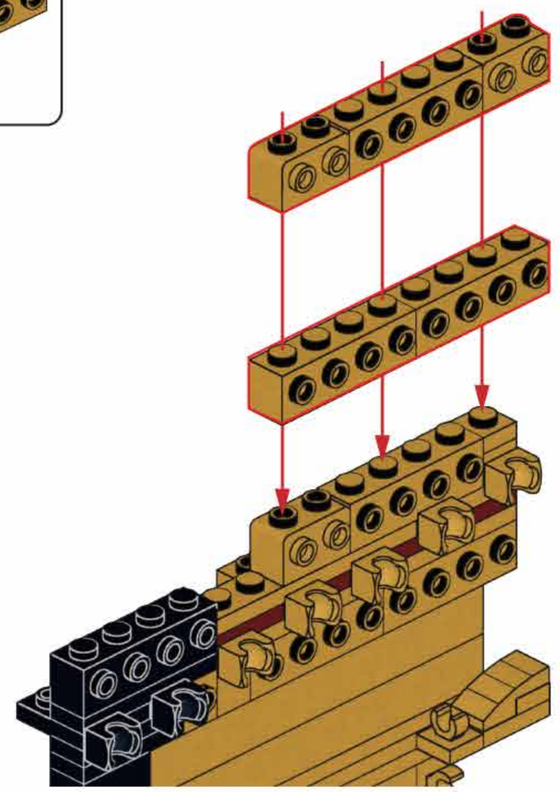

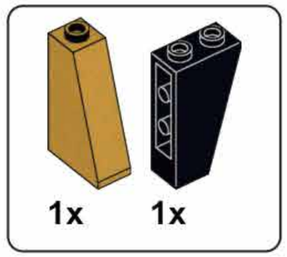

K76

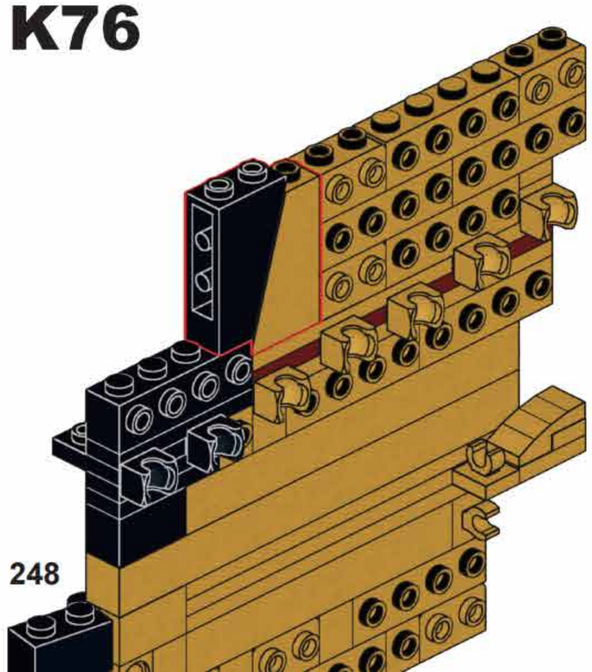

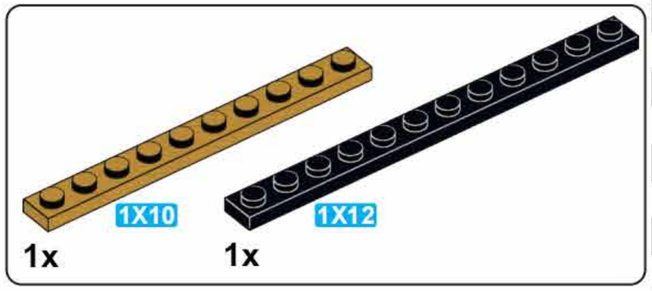

K77

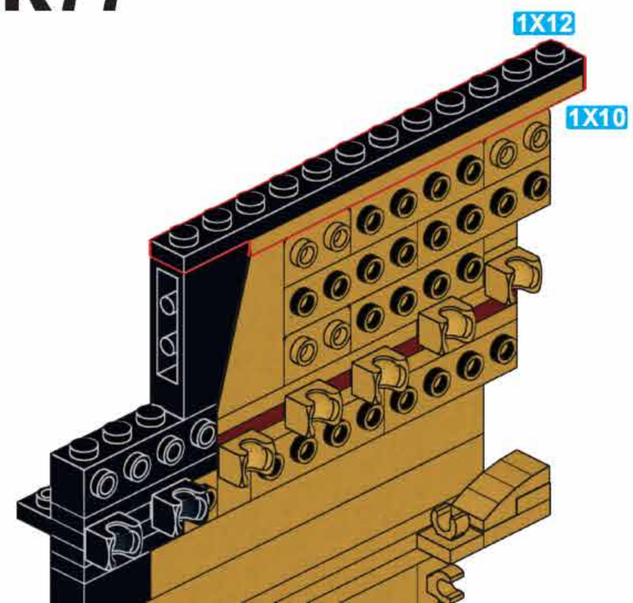

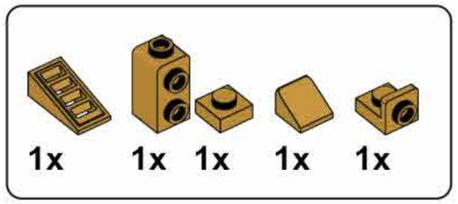

K78

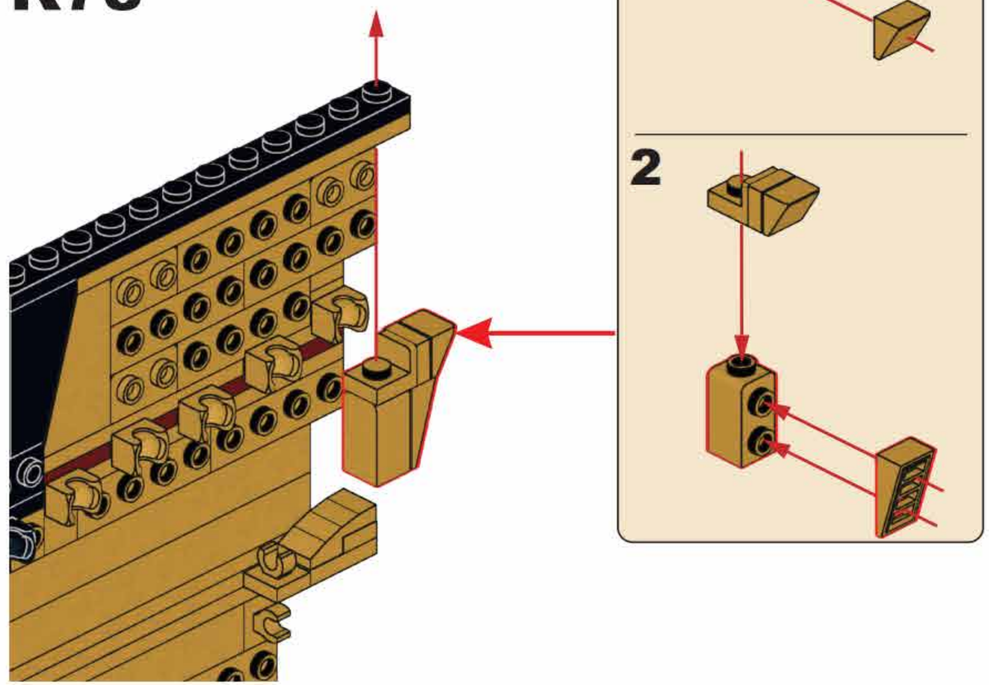

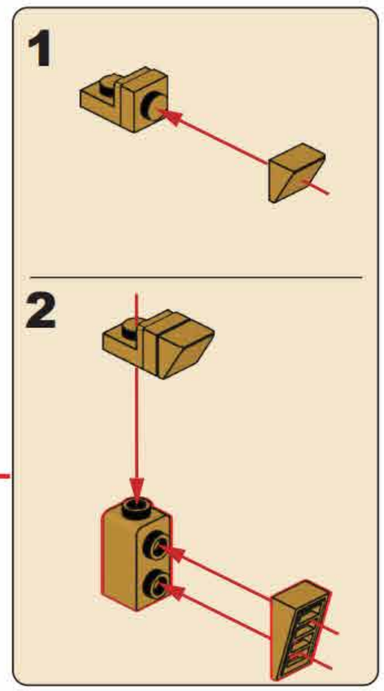

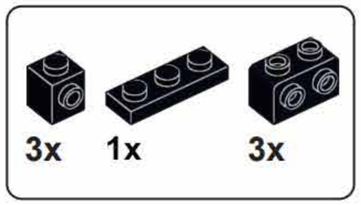

K79

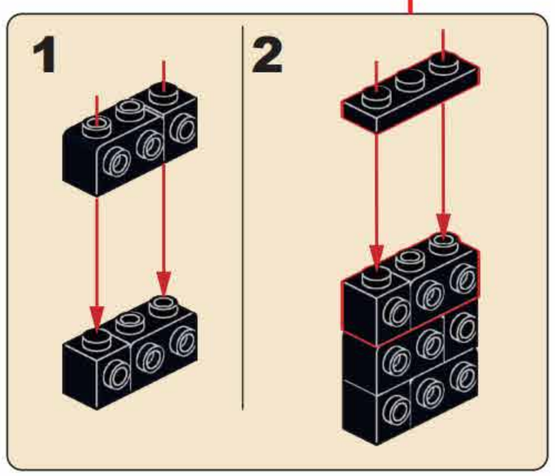

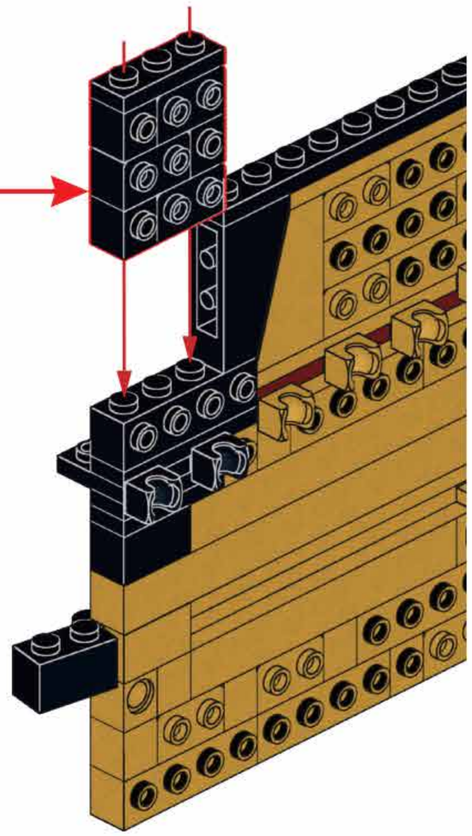

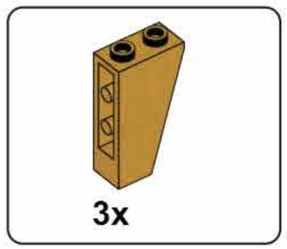

K80

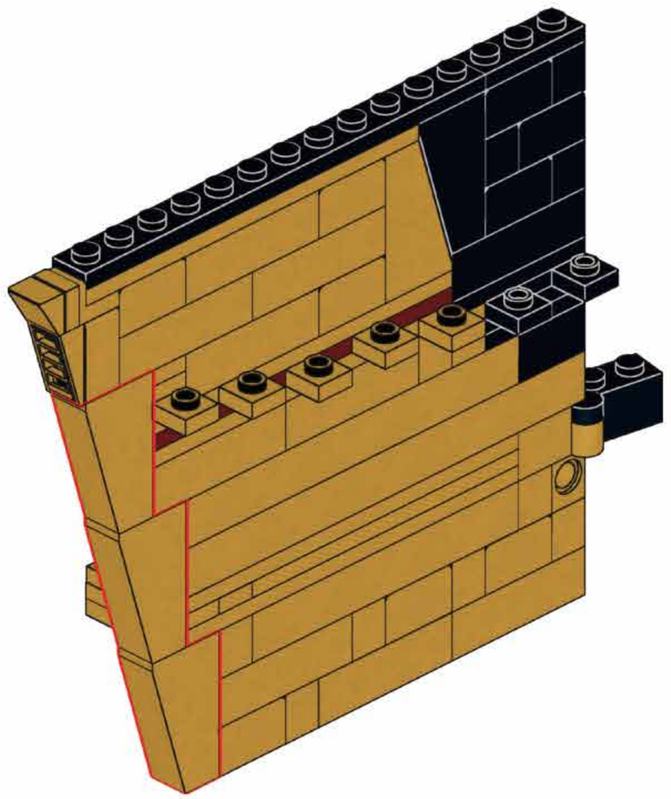

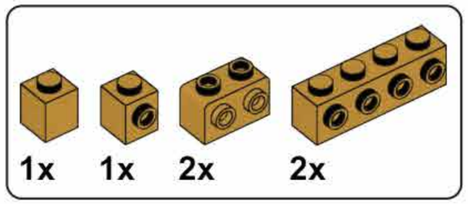

K81

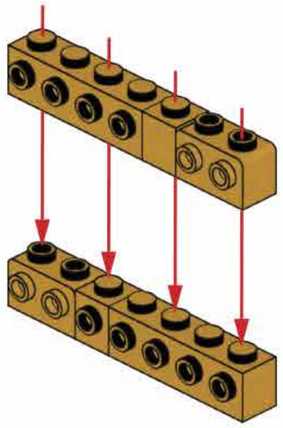

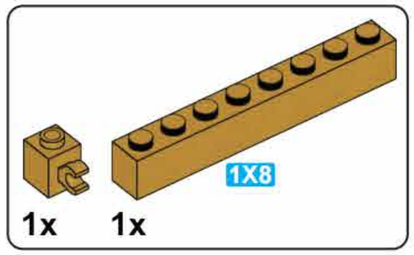

K82

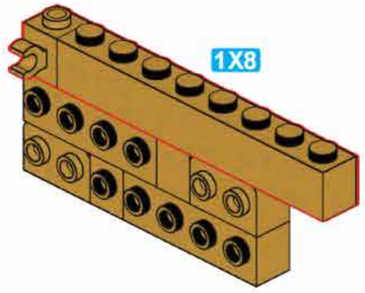

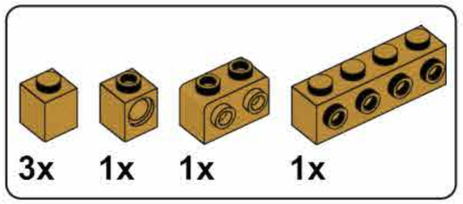

K83

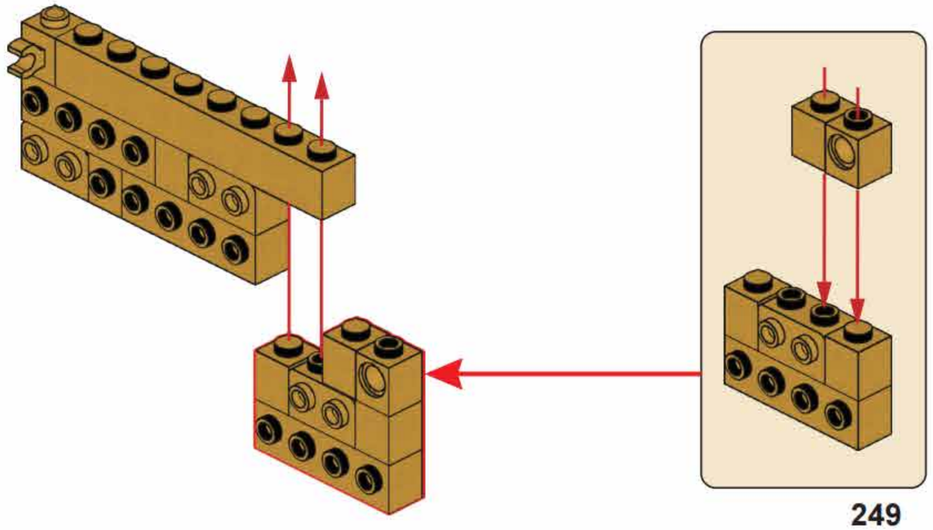

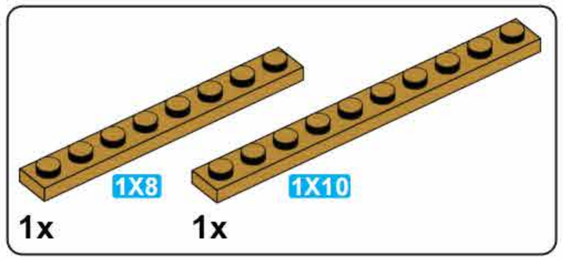

K84

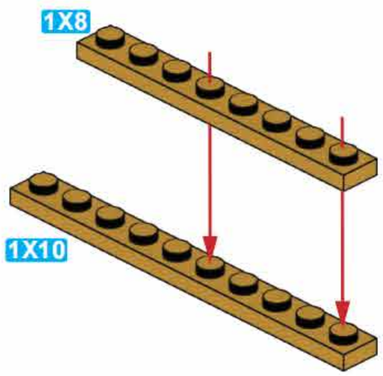

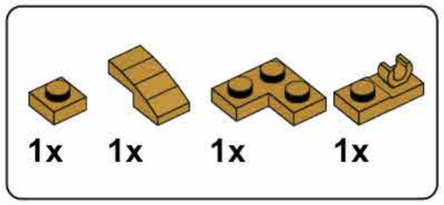

K85

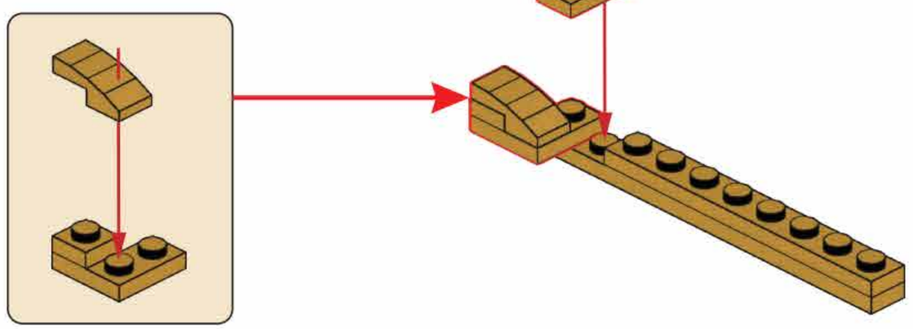

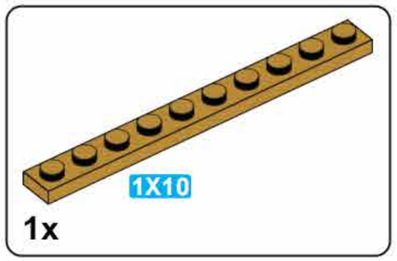

K86

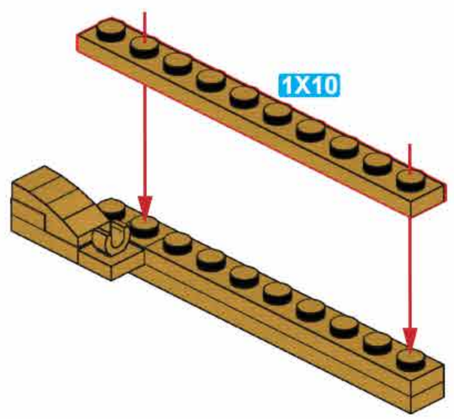

K87

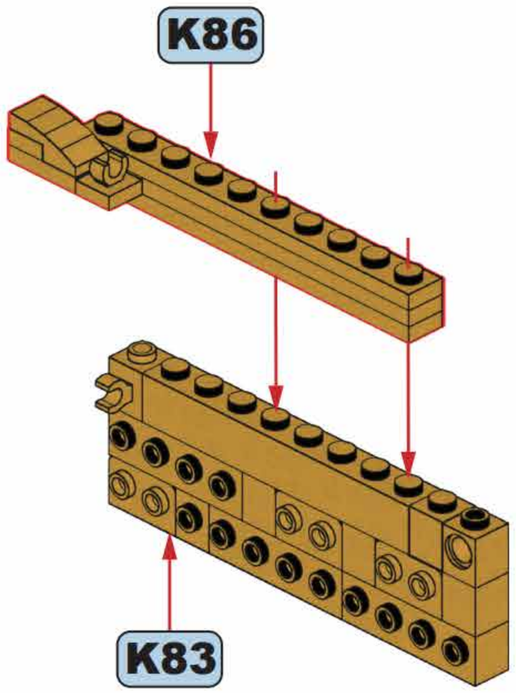

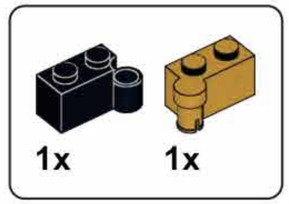

K88

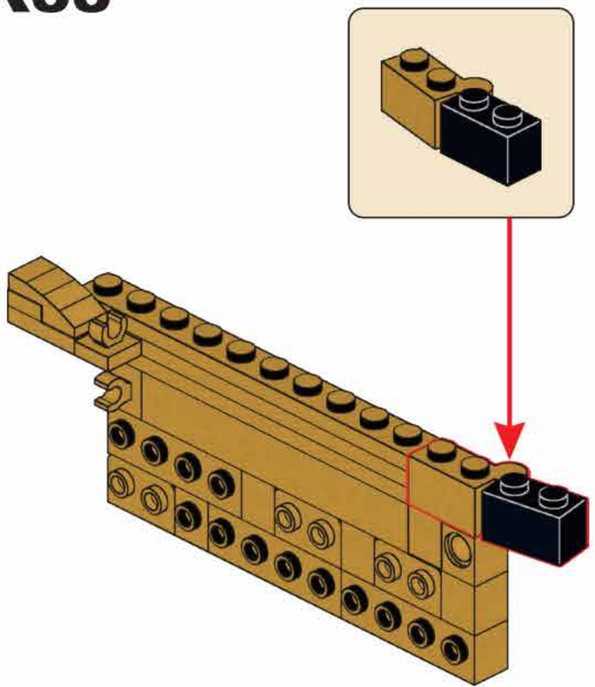

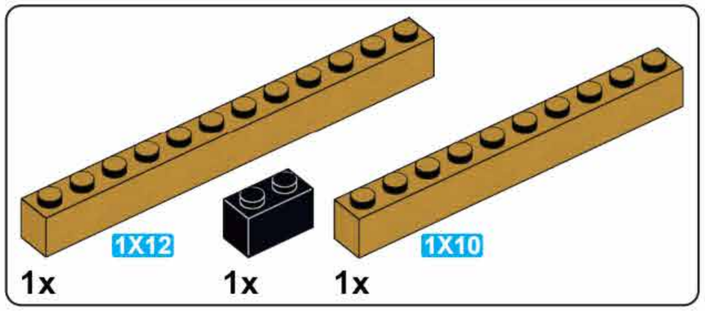

K89

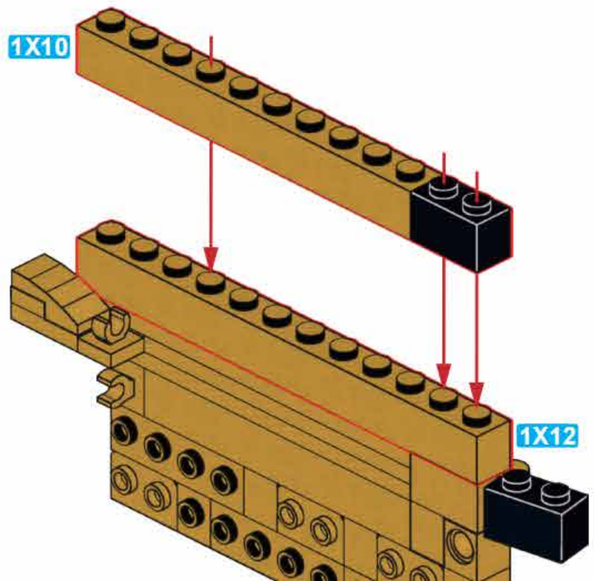

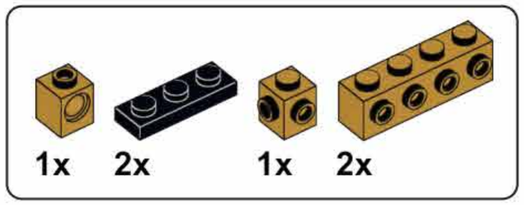

K90

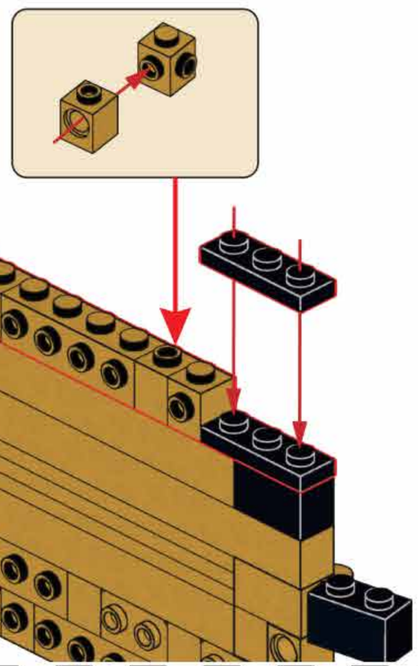

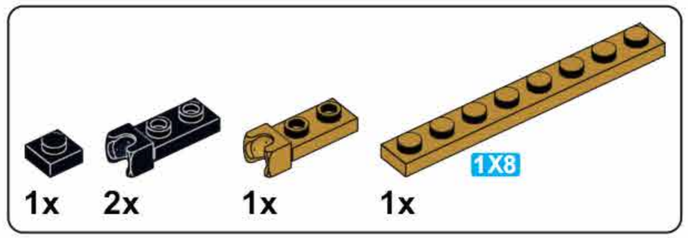

K91

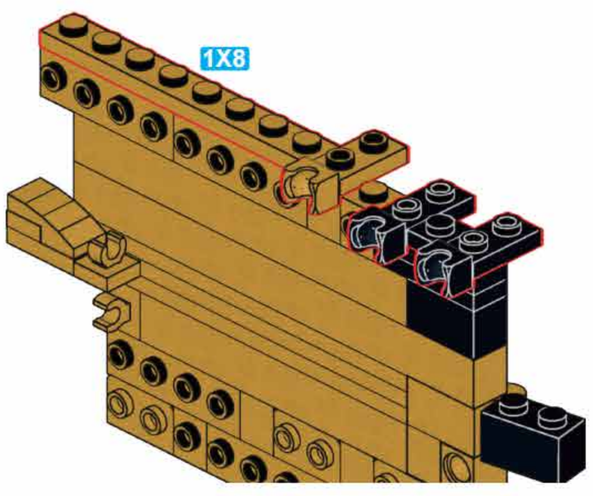

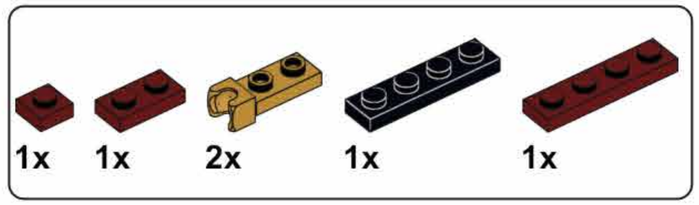

K92

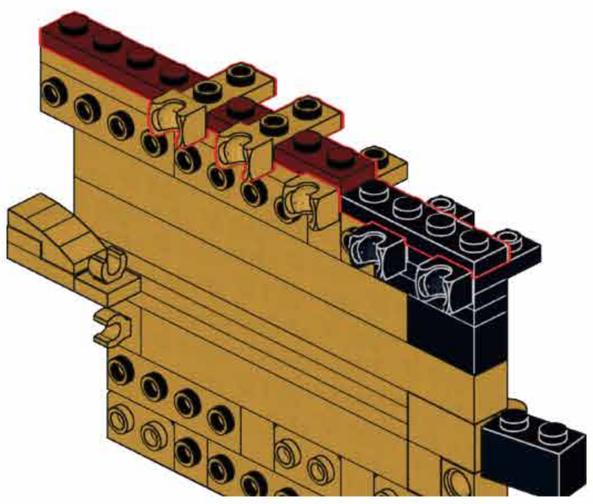

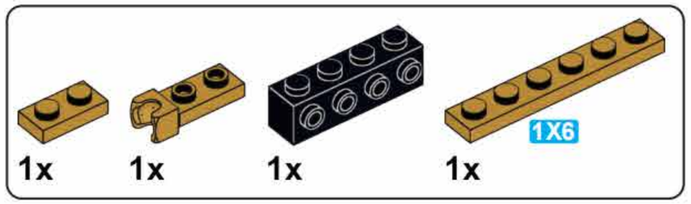

K93

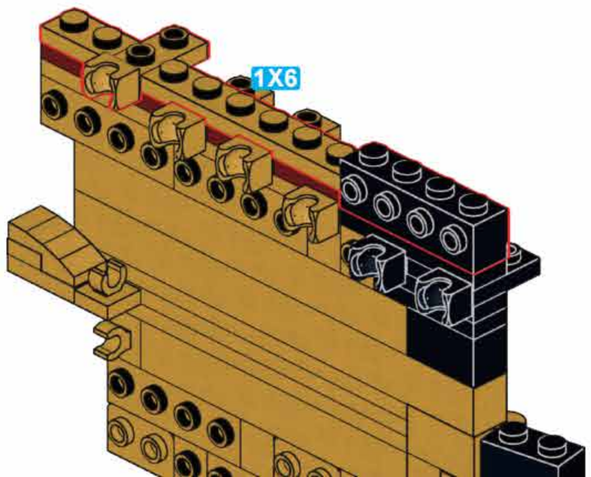

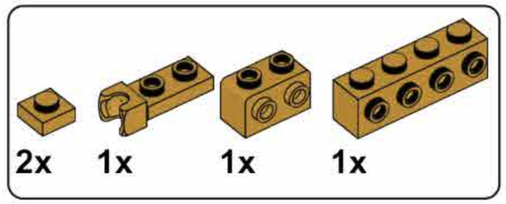

K94

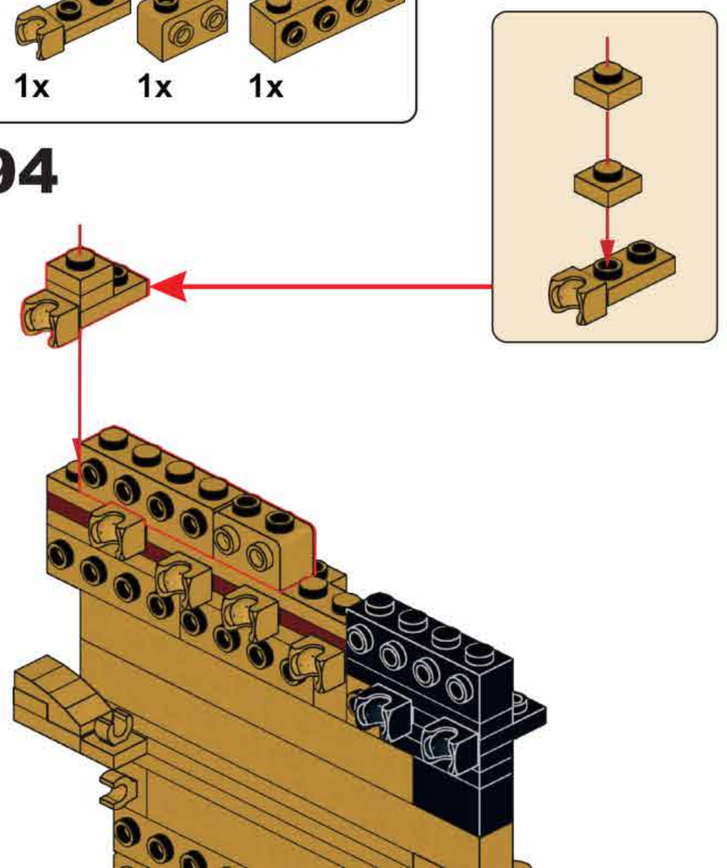

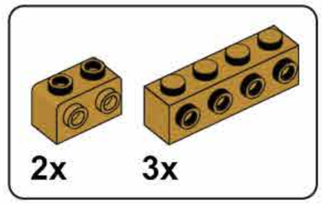

K95

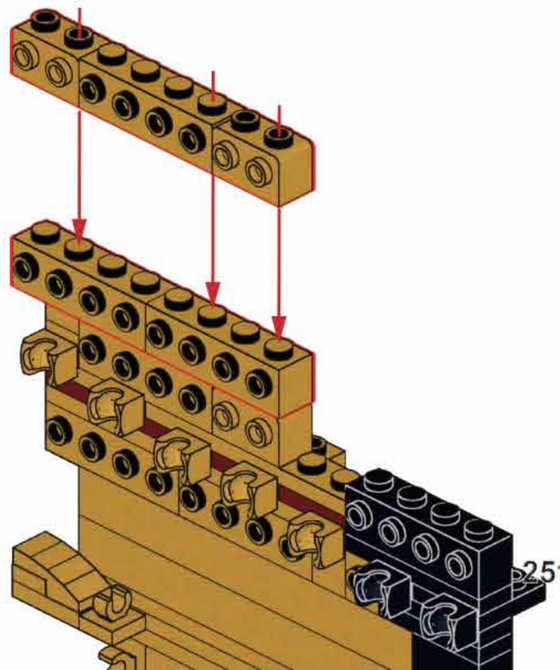

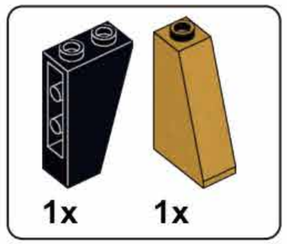

K96

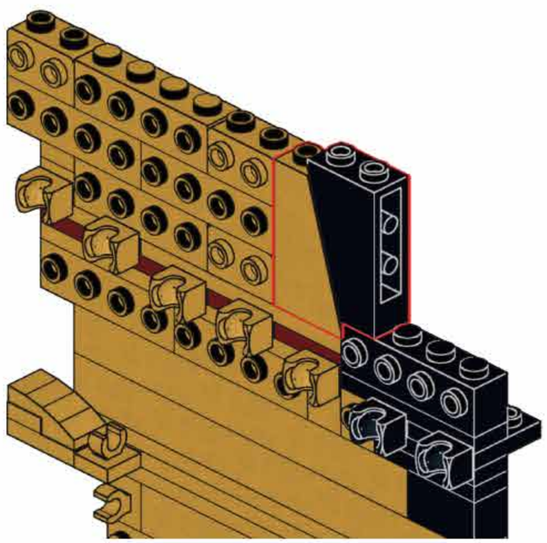

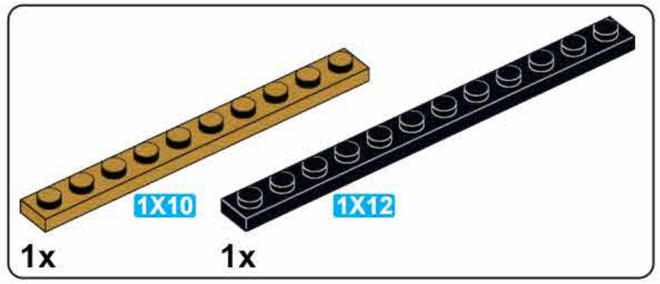

K97

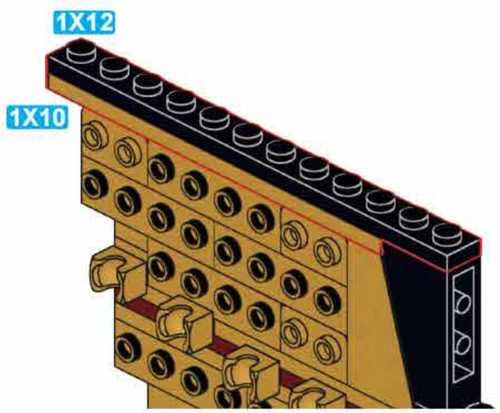

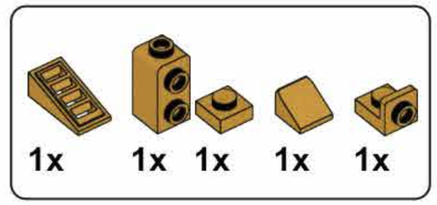

K98

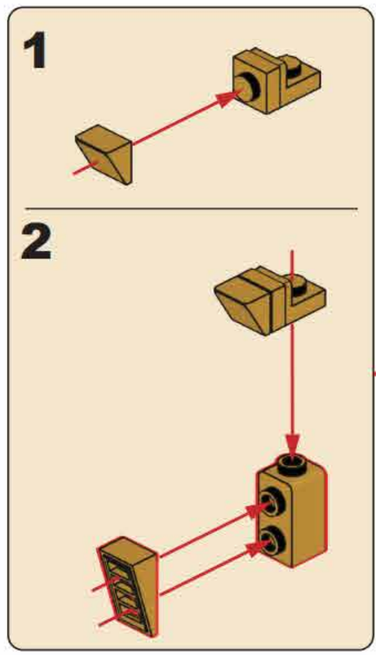

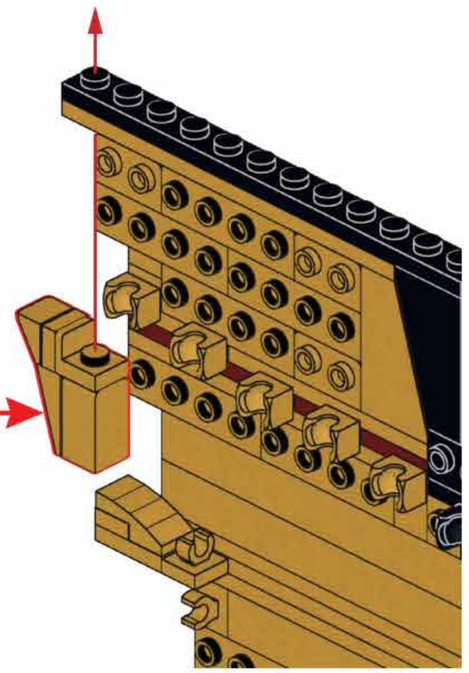

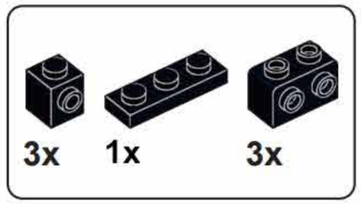

K99

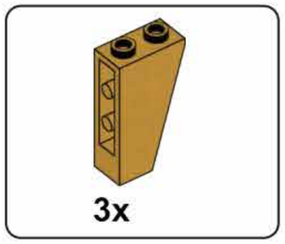

K100

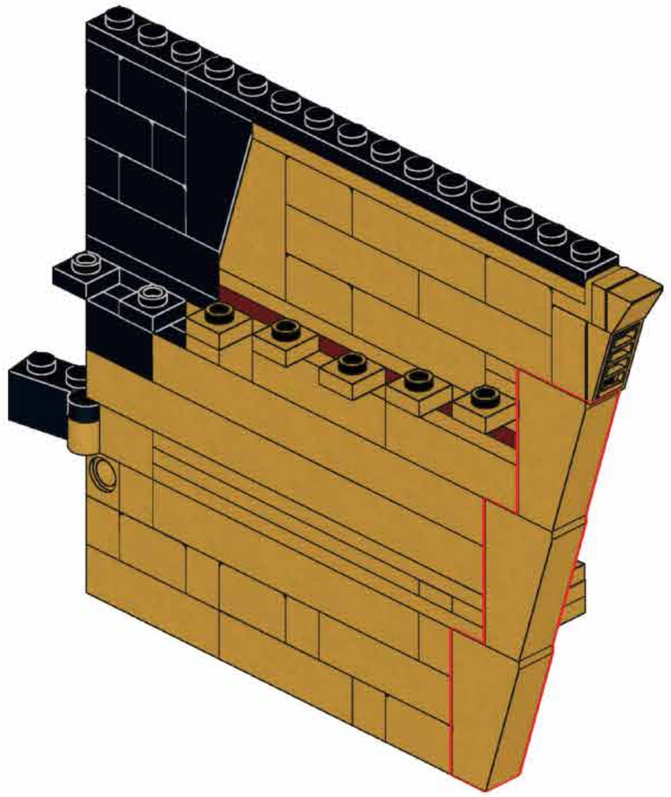

K101

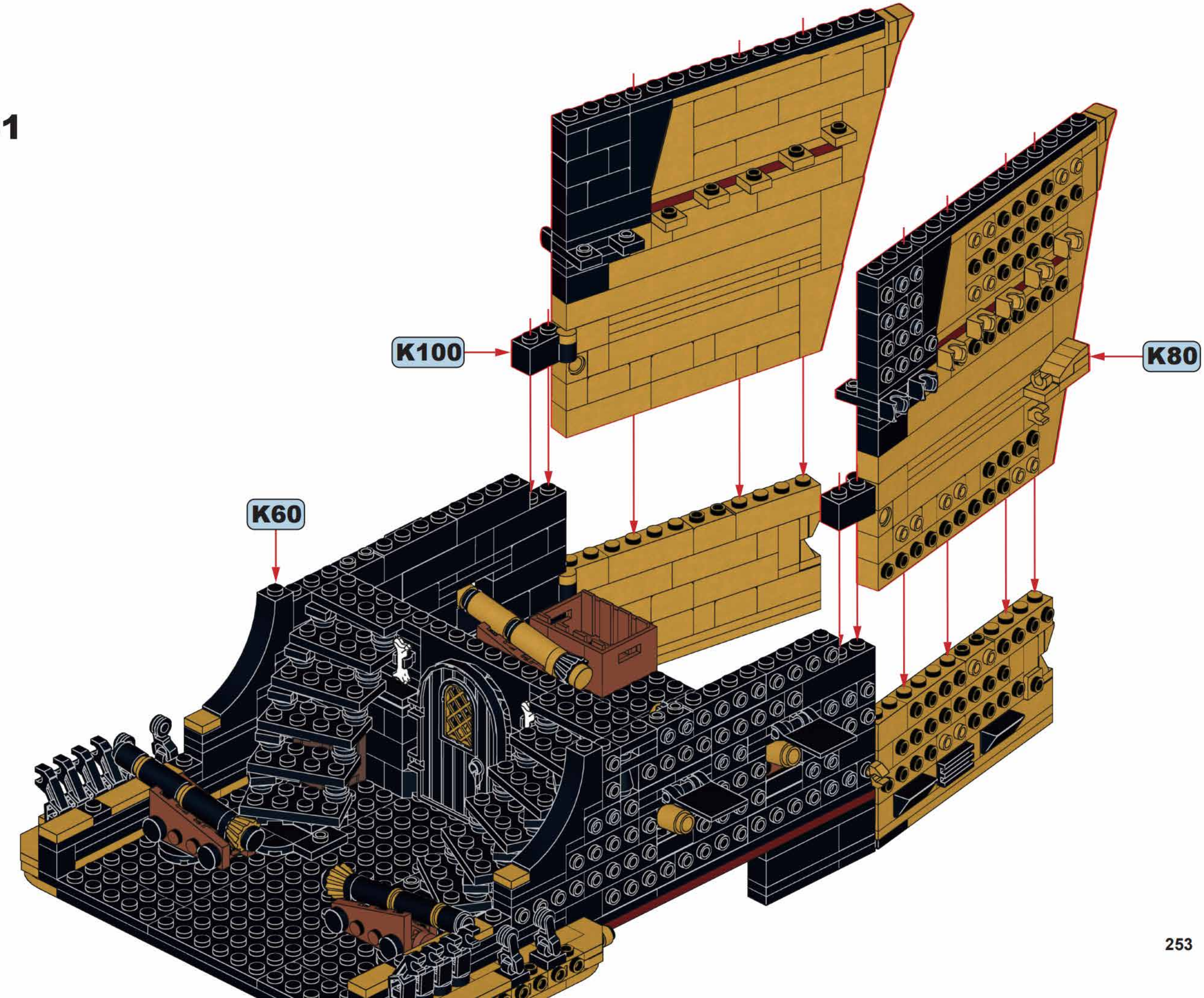

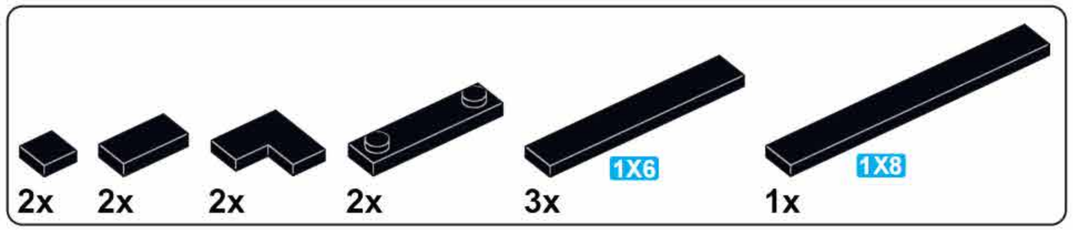

K102

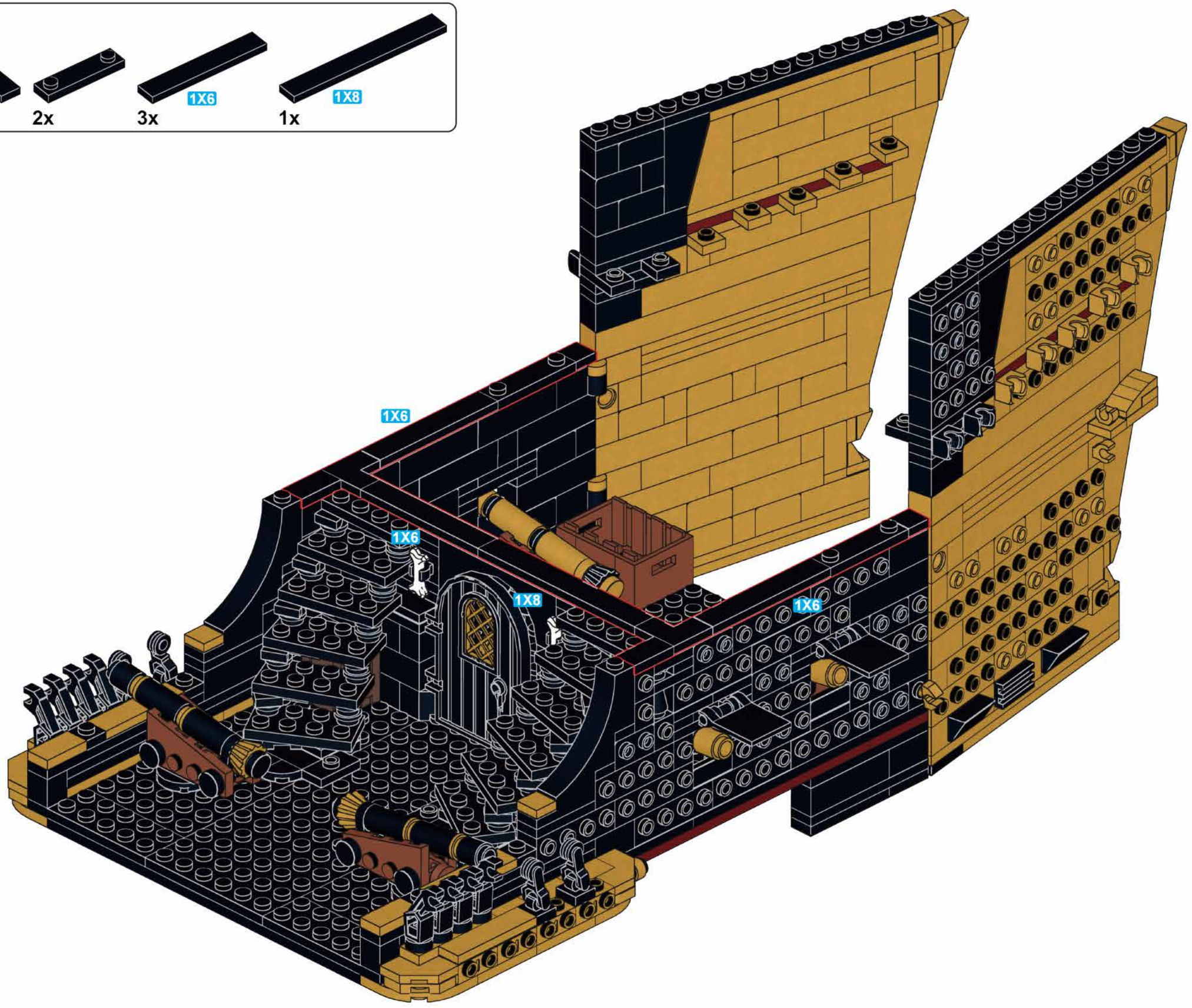

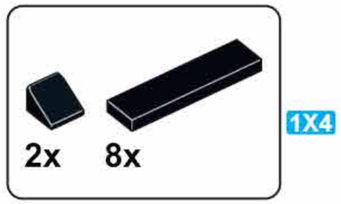

K103

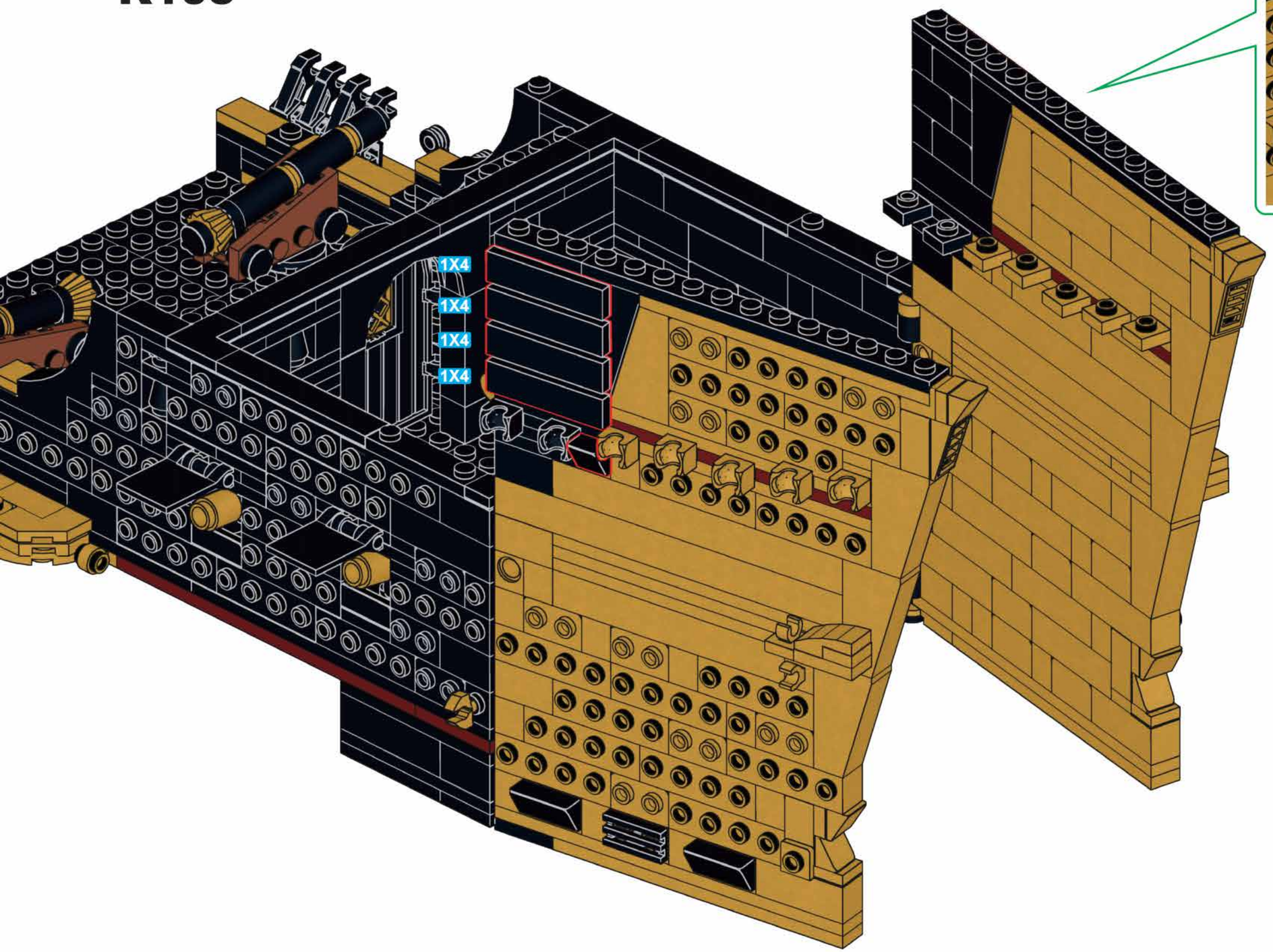

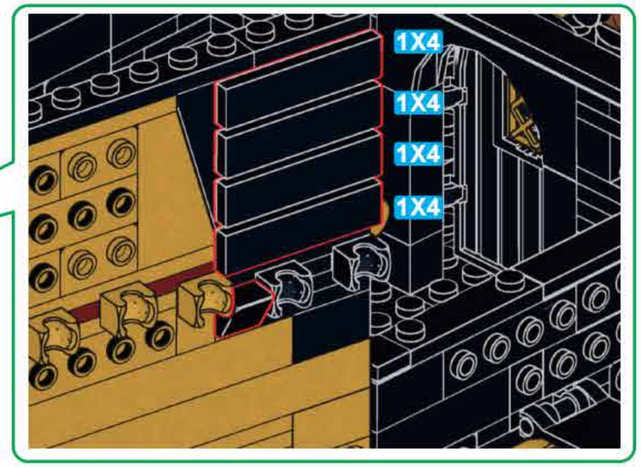

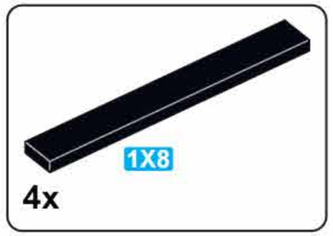

4x

K104

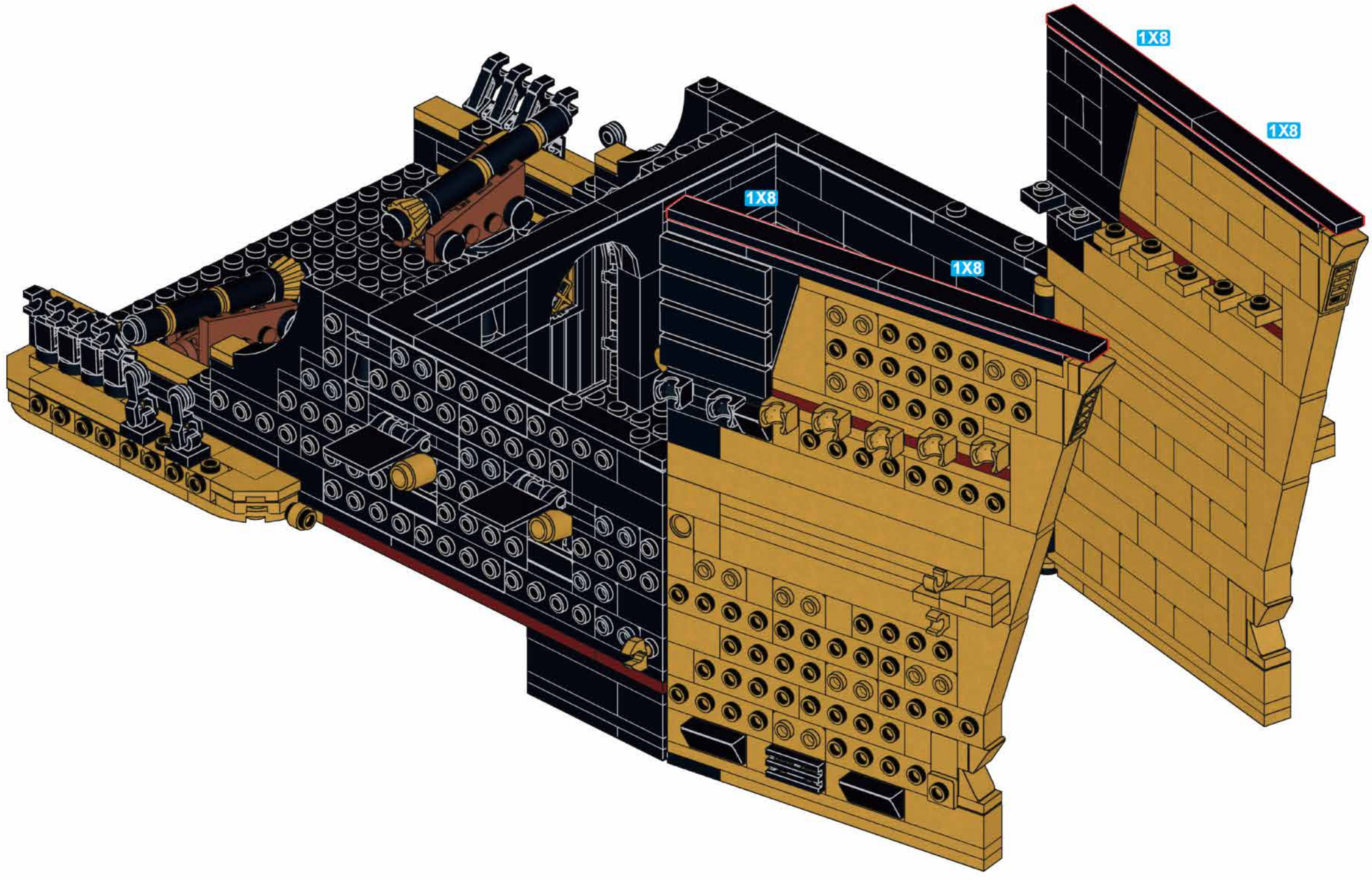

Reobrix

NO.66049

Revenge Sailing ship

Revenge Class Battleship